NOTICE OF A DEVELOPMENT REVIEW COMMITTEE MEETING
February 20, 2025, at 9:00 AM

PUBLIC NOTICE is hereby given that the Vineyard Development Review Committee will hold a regularly scheduled Development Review Committee meeting on Thursday, February 20, 2025, at 9:00 AM, in the City Council Chambers at City Hall, 125 South Main Street, Vineyard, UT.

1. **CALL TO ORDER/INVOCATION/INSPIRATIONAL THOUGHT/PLEDGE OF ALLEGIANCE**

2. **CONSENT ITEMS**
   - **2.1. Approval of the August 21st, 2024 Development Review Committee Draft Minutes**
   - **2.2. Approval of the October 3rd, 2024 Development Review Committee Draft Minutes**

3. **BUSINESS ITEMS**
   - **3.1. Site Plan with Conditional Use Permit - Church Meetinghouse at 1700 W 575 S**
   - **3.2. Site Plan with Conditional Use Permit - Church Meetinghouse at 1700 W 575 S (East Building)**

4. **WORK SESSION**

   No work items were submitted.

5. **STAFF AND COMMISSION REPORTS**

6. **ADJOURNMENT**

The next regularly scheduled meeting is March 6th, 2025.

This meeting may be held in a way that will allow a committee member to participate electronically.

The public is invited to participate in all public meetings. In compliance with the Americans with

Disabilities Act, individuals needing special accommodations during this meeting should notify the Planning Department at least 24 hours prior to the meeting by calling (801) 226-1929.

The foregoing notice and agenda were posted on the Utah Public Notice Website and Vineyard Website, posted at Vineyard City Hall, delivered electronically to city staff and each member of the DRC

AGENDA NOTICING COMPLETED ON: February 18th, 2025

CERTIFIED (NOTICED) BY: /s/. Madison Reed
Madison Reed, Planning Technician

MINUTES OF A DEVELOPMENT REVIEW COMMITTEE MEETING - SPECIAL SESSION
August 21, 2024, at 11:00 AM

ATTENDENCE:

COMMITTEE MEMBERS: Naseem Ghandour, Chair; Preston Jensen, Parks and Recreation Representative; Cris Johnson, Building Director; Eric Elis, City Manager; Morgan Brim, Community Development Director; Brandon Valley, Fire Marshall.

STAFF PRESENT: Cache Hancey, Senior Planner; Anthony Fletcher, Planner; Madison Reed, Planning Technician;

OTHERS PRESENT: Bronson Tatton, Flagborough Representative

1. **CALL TO ORDER**

Chair Naseem Ghandour called the meeting to order at 11:03am. He prompted roll call.

2. **BUSINESS ITEMS**

2.1. Utah City Phase Five Subdivision Plat

Senior Planner Cache Hancey provided a background and presented the plat for Utah City Phase 5 Subdivision. He provided some updates on how many lots and their timelines.

Community Development Director Morgan Brim asked about the process of approvals and final plat subdivision plans.

Bronson Tatton with Flagborough clarified their method of progress.

Senior Planner Hancey clarified what the lots are addressing.

Community Development Director Brim asked if we had the plat and if they could approve it without the plat.

Senior Planner Hancey said it would probably be better if they did.

Mr. Tatton commented on the revisions.

Community Development Director Brim asked if he wanted to make conditions.

DRAFT

Chair Ghandour responded in saying that they are fine as conditions. He made comments on the road dedications and utilities.

Community Development Director Brim clarified that it is something that can be verified prior to signature.

Chair Ghandour said yes.

Mr. Tatton updated the committee on revisions made since the last meeting.

Community Development Director Brim requested clarification.

A discussion about phase 2 plats and timeline of agenda items.

Chair Ghandour expressed concern about how this will be presented.

Senior Planner Hancey noted a preferred process for clarity.

Community Development Director Brim requested an exhibit for all of the current plats for tracking purposes.

Mr. Tatton acknowledged this request and noted he would provide a cleaned version.

Community Development Director Brim provided details he would want.

Senior Planner Hancey provided conditions: all lots will be assigned an address and printed on the mylar, a note with "in accordance with section 3.06.010 of the advised ordinances of vineyard city, all private roads shall be available for public use at all times.", and an updated plat with the lot line splitting the existing Lot 3, creating Lot 5, will be provided prior to recordation.

Discussion about additional conditions ensued. These conditions include: the definition for the public utility easements will be noted on the plat with a reference to the state.

No further questions.

Motion: COMMUNITY DEVELOPMENT DIRECTOR BRIM MOTIONED TO APPROVE THE UTAH CITY PHASE 5 FINAL PLAT WITH THE FOUR CONDITIONS PROPOSED AT 11:18AM. CITY MANAGER ELLIS SECONDED. ROLL CALL FOR YES INCLUDED: BRIM, ELLIS, GHANDOUR, JOHNSON, VALLEY, AND JENSEN. THE VOTE CARRIED UNANIMOUSLY.

3. ADJOURNMENT

The meeting was adjourned at 11:19am.

MINUTES CERTIFIED COMPLETED ON:

DRAFT

CERTIFIED (NOTICED) BY: /s/. Madison Reed

Madison Reed, Planning Technician

DRAFT

MINUTES OF A DEVELOPMENT REVIEW COMMITTEE MEETING
October 3, 2024, at 9:00 AM

ATTENDENCE:

COMMITTEE MEMBERS PRESENT: Chair Naseem Ghandour, Public Works Director and City Engineer; Brian Vawdrey, Parks and Recreation Director; Eric Ellis, City Manager; Cris Johnson, Building Official; Brandon Valley, Deputy Fire Marshall; Cache Hancey, Senior Planner standing in for Community development in place of Morgan Brim.

STAFF PRESENT: Patricia Abdullah, Plans Examiner; Madison Reed, Planning Technician; and Patrick James, Assistant City Engineer

OTHERS PRESENT: There were no others present.

1. CALL TO ORDER

Chair Naseem Ghandour called the meeting to order at 9:02am. He prompted roll call.

2. CONSENT ITEMS

2.1. Approval of the March 21st, 2024 Development Review Committee Draft Minutes

2.2. Approval of the April 4th, 2024 Development Review Committee Draft Minutes

2.3. Approval of the April 18th, 2024 Development Review Committee Draft Minutes

Motion: CITY MANAGER ERIC ELLIS MOTIONED TO APPROVE THE MINUTES AS PRESENTED AT 9:03AM. DEPUTY FIRE MARSHALL BRANDOON VALLEY SECONDED. ALL IN FAVOR VOTED YES: VAWDREY, ELLIS, GHANDOUR, JOHNSON, AND VALLEY. THE MOTION CARRIED UNANIMOUSLY.

3. BUSINESS ITEMS

3.1. 1600 N Roadway Dedication Plat

DRAFT

Assistant City Engineer Patrick James presented the item and provided an introduction.

Chair Ghandour noted that it would officially make it a public road.

Assistant City Engineer James noted we would take over the maintenance and.

City Manager Ellis asked if taxed or any roll back had been taken care of.

Senior Planner Hancey responded in saying that he sent it off to the county and there were no comments.

Chair Ghandour highlighted that it lived up to the railroad crossing standards.

Senior Planner Hancey asked about maintenance on the road and the trail.

Chair Ghandour said that Vineyard would maintain it.

Senior Planner Hancey noted that it was not included on the plat.

Senior Planner Hancey noted that a condition could be to decipher ownership and maintenance of the trail.

Motion: SENIOR PLANNER AND COMMUNITY DEVELOPMENT REPRESENTATIVE CACHE HANCEY MOVED TO APPROVE THE 1600 N ROADWAY DEDICATION PLAT AS REQUESTED BY CHRIS KEPHARDT WITH MS PROPOERTIES OF VINEYARD WITH A CONDITION TO FIGURE OUT THE OWNERSHIP OF THE TRAIL AT 9:07AM. BUILDING OFFICIAL CRIS JOHNSON SECONDED. ALL IN FAVOR VOTED YES: VAWDREY, ELLIS, GHANDOUR, JOHNSON, AND VALLEY. THE MOTION CARRIED UNANIMOUSLY.

4. WORK SESSION

4.1. DRC Review and Comment Process - Switching to Bluebeam Studio

Senior Planner Hancey introduced the aim to review things in Blue Beam. The intention is to review the items before DRC, and to discuss comments at DRC.

Plans Examiner Patricia Abdullah added that the idea was to create a shared space for review and have DRC for making comments and asking questions to the applicants.

Chair Ghandour noted that this would make the meetings more constructive.

Senior Planner Hancey noted how the noticing would come with the items to review.

DRAFT

Chair Ghandour said that there may be changes to timelines and that there would need to be hard deadlines to maintain the schedule.

Senior Planner Hancey said we could create a timeline flowchart.

Deputy Fire Marshall Valley suggested to have a place to initial and comment on the document.

Senior Planner Hancey said that would be a question for patty.

Plans Examiner Abdullah said that Bluebeam has a place for you to leave comments.

Senior Planner Hancey recommended that we could do a brief training in the next DRC meeting.

Plans Examiner Abdullah said we could do a work session and map out how this can work in the next meeting.

Senior Planner Hancey said we could also meet outside of DRC.

Building Official Johnson appreciated this idea.

City Manager Ellis commented that we should maintain flexibility but find deadlines to everybody.

Chair Ghandour noted that everyone on DRC would need to have access.

5. STAFF, COMMISSION, AND COMMITTEE REPORTS

Senior Planner Hancey asked if this time is till working. He noted that the calendar for the next year will be in works.

Chair Ghandour said that if anyone had comments on that to get in touch

Plans Examiner Abdullah asked if the minutes were approved because she did not hear that. She did not have any opposition.

6. ADJOURNMENT

The meeting was adjourned at 9:18am.

MINUTES CERTIFIED COMPLETE ON:

CERTIFIED (NOTICED) BY: /s/. Madison Reed
Madison Reed, Planning Technician

DRAFT

DRAFT

STAFF REPORT

Meeting Date:	February 20, 2025
Agenda Item:	Site Plan with Conditional Use Permit - Church Meetinghouse at 1700 W 575 S
Department:	Community Development
Presenter:	Rachel Stevens

Background/Discussion:
Mike Davey, representing the Church of Jesus Christ of Latter Day Saints has applied for a site plan with conditional use permit. The applicant is applying to build two church meetinghouses with two separate building permits. This application is for a meeting house for unmarried college students. The meetinghouse will be 32,713 square feet and have an occupancy of 504 people in the chapel. The site plan also includes an 1,800 square feet pavilion and 244 square foot storage building. Religious institutions are allowed through a conditional use permit in the R&A-5 zone.

There is a total of 425 parking spaces provided, which exceeds the minimum requirement of 126 parking spaces. There is a total of 13 bike racks, which meets the minimum requirement.

The building roof has a total height of 32' 4", which is under the allowed height of 35'. The steeple has a total height of 71' 7 3/4". Vineyard Zoning Code 15.32.120 states that the maximum building height shall not apply to steeples.

The landscaping of the project will be 21.3% of the total square footage, with 28% of the landscaping being turf. The site plan proposed 161 trees and 1,404 shrubs. This meets the minimum required landscaping requirements.

The buildings will be finished with brick work, stone work, metal and glass, which are all allowed materials.

This site plan and conditional use permit meets all the requirements of the Vineyard Zoning Code.

Fiscal Impact:

Recommendation:
Staff recommends that the Development Review Committee recommend approval of the site plan with conditional use permit to the Planning Commission.

Sample Motion:

Attachments:
1. Site Plan and Construction Documents
2. FDC_distance

3. Landscape Plan
4. Site Survey
5. Site Photometrics Plan
6. Project Narrative
7. Traffic Study

Orem YSA 3rd 10 Ward Building
Orem UT YSA 3rd Stake

Approx. 1700 West 575 South
Vineyard, Utah 84059

Vicinity Plan

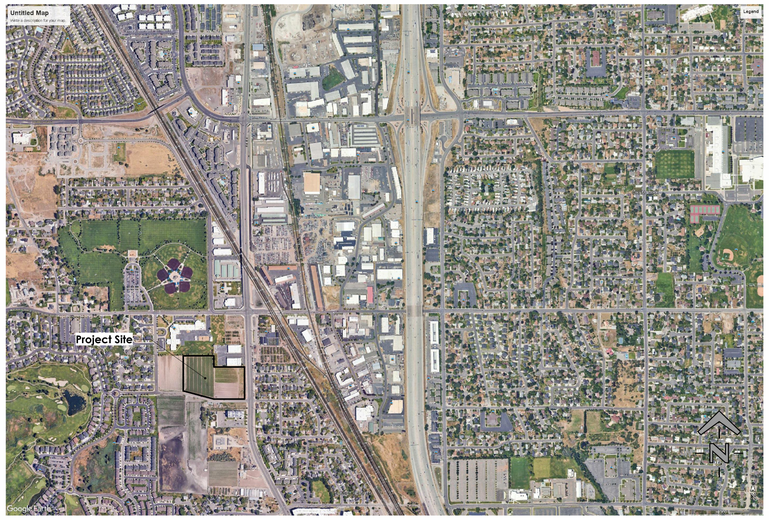

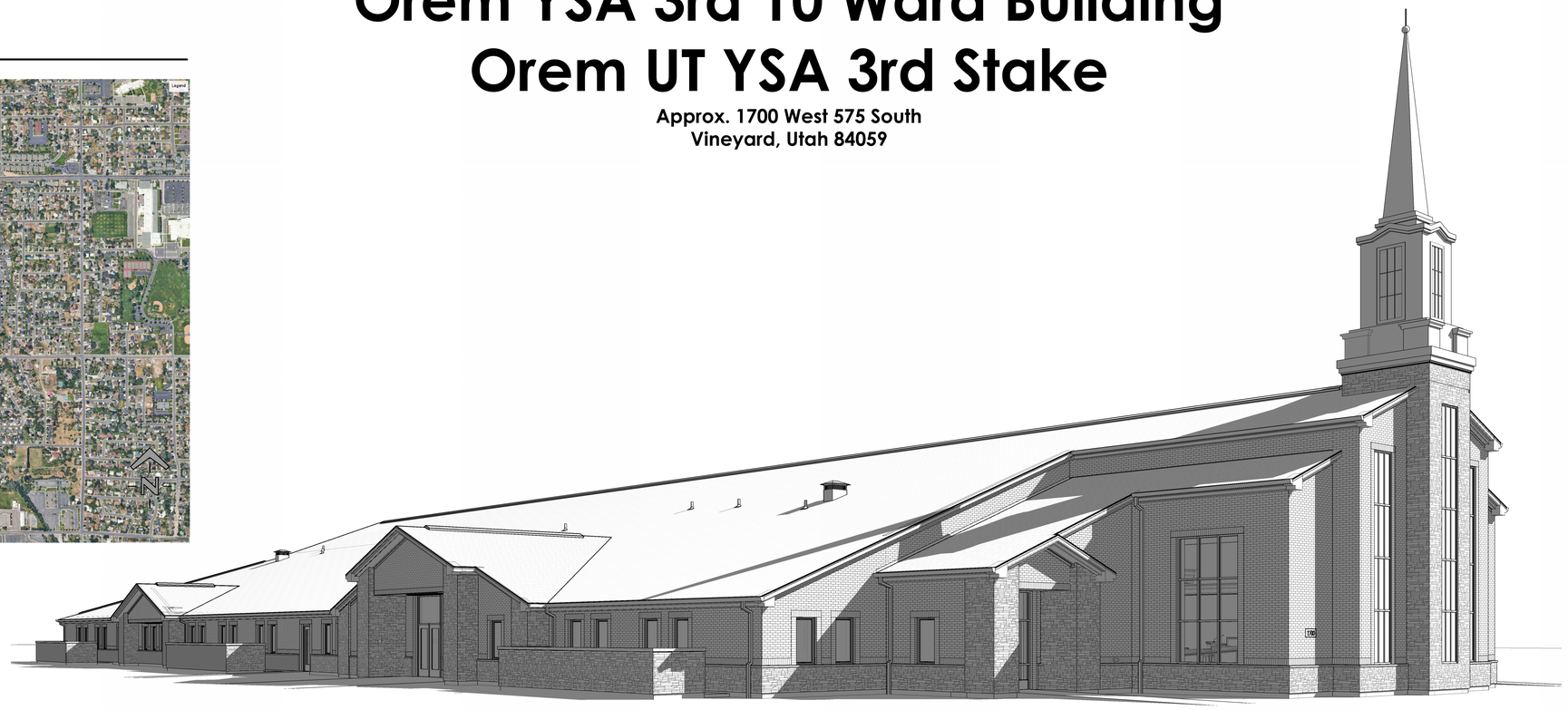

Project Team

Architect
Lafe Harris — lafe@bhdarchitects.com
B H D Architects
65 East Wadsworth Park Drive, Suite 205 Draper, Utah 84020
Office - 801.571.0010
Mobile - 801.367.0608

Owner - Project Manager
Jeff Scott — scottjd@churchofJesusChrist.org
UT Salt Lake City PM Office
50 East North Temple Street CO812 Salt Lake City, Utah 84150-0012
Office - 801.240.7153
Mobile - 801.497.1901

Owner - Facilities Manager
Nick Cluff — CluffND@ChurchofJesusChrist.org
Orem UT FM Group
135 South 800 East American Fork, Utah 840059
Phone - 801.222.3160
Mobile - 801.750.1172

Surveyor
Nathan Weber — nate@diamondlandsurveying.com
Diamond Surveying
5243 S Green Pine Dr Murray, Utah 84123
Phone - 801.266.5099
Mobile - 801.455.9171

Soils Engineer
Michael Huber — mike@gshgeo.com
GSH Geotechnical Consultants
473 West 4800 South Salt Lake City, Utah 84123
Phone - 801.685.9190
Mobile - 801.243.9514

Civil Engineer
Daniel Canning — daniel@mcneileng.com
McNeil Engineering
8610 South Sandy Parkway, Suite 200 Sandy, Utah 84070
Office - 801.255.7700
Mobile - 801.984.2843

Landscape Architect
Cory Whiting — cwhiting@isdgllc.com
In Site Design Group
17 North 470 West American Fork, Utah 84003
Office - 801.756.5043
Mobile - 801.372.2548

Structural Engineer
Matthew Mcbride — mattm@arwengineers.com
ARW Engineers
1594 West Park Circle #100 Ogden, Utah 84404
Office - 801.782.6008
Mobile -

Fire Protection Consultant
Jeffrey DuBois — jdd@spectrum-engineers.com
Spectrum Engineers
324 South State Street, Suite 400 Salt Lake City, Utah 84111
Office - 801.328.5151
Mobile - 801.652.1467

Mechanical Engineer
Dave Hansen — dave@engsystems.com
Engineered Systems Associates
1355 East Center Street Pocatello, Idaho 83201
Office - 208.233.0501
Mobile - 208.313.1544

Electrical Engineer
David Hinckley — dgh@spectrum-engineers.com
Spectrum Engineers
324 South State Street, Suite 400 Salt Lake City, Utah 84111
Phone - 801.401.8435
Mobile - 801.201.8369

Acoustical Engineer
Aaron Abbott — awa@spectrum-engineers.com
Spectrum Engineers
324 South State Street, Suite 400 Salt Lake City, Utah 84111
Office - 801.401.8430
Mobile - 801.678.6383

Work by Owner

Item	Furnished by	Installed by	Item	Furnished by	Installed by
Special inspections and testing	Owner	Owner	Basketball backstops, equipment	Owner	Owner
HVAC test and balance	Owner	Owner	Volleyball sleeves, volleyball equipment	Owner	Contractor
Hymn number display	Owner	Owner	Artwork	Owner	Owner
Carpet and carpet base	Owner	Owner	Piano, organ	Owner	Owner
Fixed glass display boards	Owner	Contractor	Phone and computer systems	Owner	Owner
Fixed tackboards	Owner	Contractor	Internet firewall, network switch, wireless access points	Owner	Contractor
Display cases	Owner	Contractor	Access control system	Owner	Owner
Interior signage	Owner	Contractor	Internet service provider modem	Owner	Owner
Pews	Owner	Owner	Televisions, television brackets	Owner	Contractor
Soap, paper towel, and toilet tissue dispensers	Owner	Owner	Pavilion kit and drinking fountain	Owner	Contractor
Baby changing stations	Owner	Contractor	Pavilion tables	Owner	Owner
Refrigerator, range, microwave	Owner	Contractor	High security cylinders and cores	Owner	Owner
Projection screens	Owner	Contractor	Network streaming equipment	Owner	Owner
Key cabinet	Contractor	Owner	Roof access ladder anchor	Owner	Contractor

Deferred Submittals

1. Fire sprinkler shop drawings
2. Fire alarm shop drawings
3. Trussed rafter shop drawings
   A. The Structural Engineer shall review and approve the trussed rafter shop drawings prior to fabrication.
4. Special inspector certifications.

Drawings Revision Schedule

#	Date	Description
1	15 Aug 2024	Bid Drawings

Drawing Index

General
G001 Cover Page and Drawing Index
G002 General Information
G101 Code Analysis Plan and General Information
G102 Main Floor Egress Plan

Site
C101 Site Survey
C102 Site Existing Conditions Plan
C111 Site Architectural Plan - North
C112 Site Architectural Plan - West and South
C113 Site Dimension Plan - North
C114 Site Dimension Plan - West and South
C121 Grading and Drainage Plan
C122 Enlarged Exhibit Grading and Drainage Plan
C123 Grading and Drainage Plan
C151 Site Utility Plan
C171 Erosion Control Plan
C501 Site Details
C502 Site Details
C503 Site Details
C504 Site Details
C521 Civil Details
C531 Civil Details
C541 Civil Details
C551 Civil Details
C571 Civil Details
C601 Civil Notes
C801 Storage Building
C811 Pavilion Plan Views
C812 Pavilion Plan Views
C813 Pavilion Section and Detail Views
C814 Pavilion Roof Views and Details

Landscaping
LS402 Irrigation Details
LS101 Landscape Plan
LS102 Landscape Plan
LS201 Irrigation Plan
LS202 Landscape Details
LS301 Landscape Details
LS401 Irrigation Details

Architectural
A101 Floor Plan
A102 Equipment Platform Plan
A103a Dimension Plan
A103b Dimension Plan
A104a Wall Types Plan
A104b Wall Types Plan
A105 Wall Types Details
A106 Finish Plan
A110 Foundation Dimension Plan
A121 Roof Plan
A122 Roof Details
A151 Reflected Ceiling Plan
A201 Exterior Elevations
A202 Exterior Elevations
A203 Enlarged Exterior Elevations
A204 Enlarged Exterior Elevations
A205 Enlarged Exterior Elevations
A206 Steeple Details
A207 Steeple Details
A211 Enlarged Exterior Details
A212 Enlarged Exterior Details
A301 Building Sections
A302 Building Sections
A303 Building Sections
A304 Building Sections
A305 Building Sections
A306 Building Sections
A310 Wall Sections and Details
A314 Wall Sections
A401 Enlarged Plans & Elevations
A402 Enlarged Plans & Elevations
A403 Enlarged Plans And Elevations
A404 Enlarged Restroom Plans
A405 Enlarged Plan & Elevations of the Rostrums
A421 Rostrum Casework Details
A422 Rostrum Casework Details
A423 Rostrum Stair & Ramp Details
A501 Plan Details
A502 Exterior Details
A503 Roof Details
A504 Miscellaneous Interior Details
A505 Ceiling Details
A601 Exterior Window Types, Storefront Types, and Window Schedule
A610 Door / Opening Schedule
A611 Door Jamb, Door Head Details and Threshold Details
A612 Storefront Details
A613 Folding Partition Details
A701 Casework Details
A702 Casework Details
A703 Lectern Details
A704 Miscellaneous Interior Profiles
A705 Miscellaneous Interior Profiles
A901 Perspectives

Furnishings
F101 Furnishings Plan
F102 Signage Plan
F103 Interior Signage and Display Board Details

Structural
S101 Footing and Foundation Plan
S102 Anchor Bolt, Hold-down, and Wall Type Plan
S103 Rostrum Framing Plans
S104 Equipment Platform Framing Plan
S105 Roof Framing Plan
S106 Enlarged Roof Framing Plans
S201 Truss Elevations
S202 Truss Elevations
S203 Truss Elevations
S204 Truss Elevations
S205 Truss Elevations
S206 Truss Elevations
S207 Truss Elevations
S208 Truss Elevations
S401 Steeple Platform Framing and Details
S402 Steeple Details
S501 Foundation Details
S502 Foundation Details
S503 Foundation Details
S504 Foundation Details
S511 Rostrum and Platform Details
S512 Rostrum and Platform Details
S513 Equipment Platform Framing Details
S514 Equipment Platform Framing Details
S521 Roof Details
S522 Roof Details
S523 Roof Details
S524 Roof Details
S601 Schedules
S602 Schedules
S603 Schedules
S604 Schedules

Fire Protection
FS101 Main Floor Fire Sprinkler PLan
FS102 Mezzanine Level Fire Sprinkler Plan
FS301 Fire Sprinkler Section
FS501A Fire Sprinkler Details
FS501B Fire Sprinkler Details

Plumbing
P100 Plumbing Foundation Plan
P101 Plumbing Floor Plan
P102 Equipment Platform Plumbing Plan
P401 Large Scale Plumbing Plans and Schematics
P402 Large Scale Plumbing Plans and Schedule
P501 Plumbing Details
P601 Gas Piping Calculation and Schematic

Mechanical
M101 Mechanical Floor Plan
M102 Equipment Platform Mechanical Plan
M103 Upper Equipment Platform Mechanical Plan
M301 Mechanical Section
M302 Mechanical Sections
M501 Mechanical Details
M502 Mechanical Details
M503 Mechanical Details
M601 Mechanical Schedules
ME101 Automatic Temperature Control Plans
ME701 Automatic Temperature Control Diagrams
ME702 Automatic Temperature Control Diagrams
ME703 Automatic Temperature Control Diagrams
ME704 Automatic Temperature Control Panels
ME705 Automatic Temperature Control E-Bus Wiring Diagram

Electrical
E101 Power Plan
E102 Equipment Platform Electrical Plan
E111 Electrical Site Plan - South
E112 Electrical Site Plan - North
E151 Lighting Plan
E501 Electrical Details
E502 Rocky Mountain Power Pad Vault
E601 Schedules & Symbols
E602 Panel Schedules
E603 Panel Schedules
E604 Lighting Fixture Schedule
E605 Power Single Line Diagram
E606 Lighting Control Wiring Diagrams
E607 Lighting Control Wiring Diagrams

Technology
ET101 Main Floor AV Floor Plan
ET102 Main Floor AV Ceiling Plan
ET601 AV Rough-in Schedules, Notes, Details, and Diagram
ET602 AV Rough-in Details
FA101 Fire Alarm Plan
TA501 AV Systems Details
TA502 AV Systems Details
TA601 AV Systems Schedules and Notes
TA602 AV Systems Diagrams
TA603 AVSystems Diagrams
TT601 Telecom Schedules, Notes, Details and Diagram

bhd ARCHITECTS
www.bhdarchitects.com
Phone 801.571.0010
Fax 801.571.0303
Toll Free 888.571.0010
65 East Wadsworth Park Drive
Suite 205 Draper, Utah 84020

LICENSED ARCHITECT — Lafe Theodore Harris — 15 Aug 2024 — 9218878-0301 — STATE OF UTAH

THE CHURCH OF JESUS CHRIST OF LATTER-DAY SAINTS

Orem YSA 3rd 10 Ward Building
Orem UT YSA 3rd Stake
Approx. 1700 West 575 South
Vineyard, Utah 84059

Date: 15 Aug 2024
BHD #: 2344
County Parcel: 57-228-0001
Plan Series: 2024 10 Ward SC
Owner #: 590-1818

Drawing Issue and Revision Schedule

No.	Description	Date
1	Bid Drawings	15 Aug 2024

Cover Page and Drawing Index

G001

Printed: 8/20/2024 1:26:44 AM

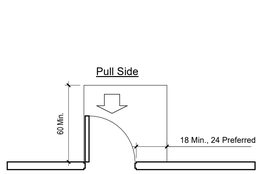

Front Approach - Swinging Door

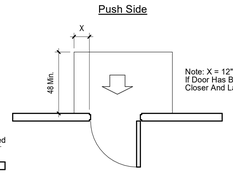

Front Approach - Swinging Door

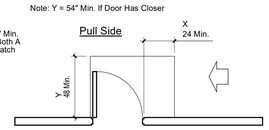

Latch Side Approach Swinging Door

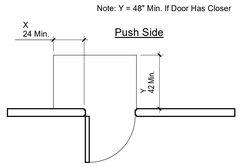

Latch Side Approach Swinging Door

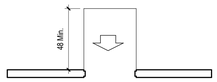

Front Approach - Sliding Or Folding Doors

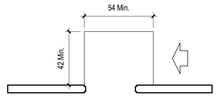

Slide Side Approach - Sliding Or Folding Doors

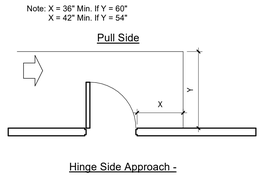

Hinge Side Approach - Swinging Door

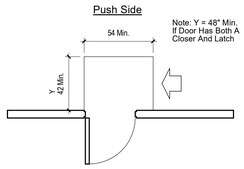

Side Approach - Swinging Door

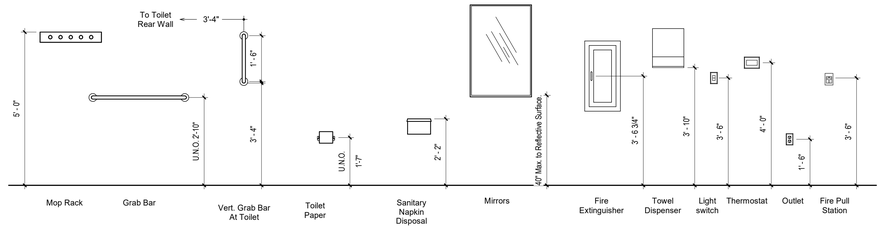

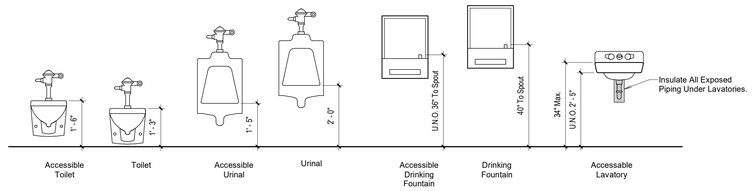

A Clearances at Doors and Openings

Scale: 1/4" = 1'-0"

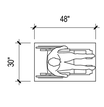

Clear Floor Space

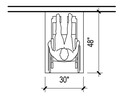

Forward Approach

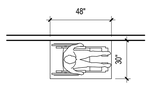

Parallel Approach

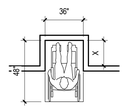

Clear Floor Space In Alcove

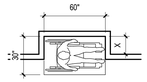

Clear Floor Space In Alcove

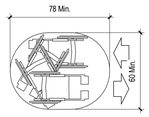

Space Needed For U-Turn

B Mounting Heights

Scale: 1/2" = 1'-0"

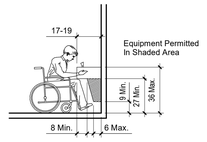

Spout Height And Knee Clearance

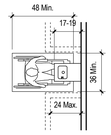

Clear Floor Space

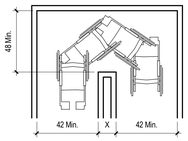

Turns Around An Obstruction

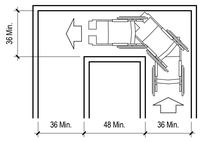

90° Turn

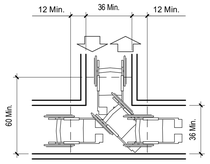

T-Shaped Space For 180° Turns

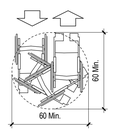

Wheelchair Turning Space

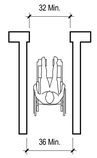

Minimum Clear Width For Single Wheelchair

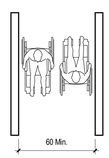

Minimum Clear Width For Two Wheelchairs

C Clearance and Clear Floor Space Requirements

Scale: 1/4" = 1'-0"

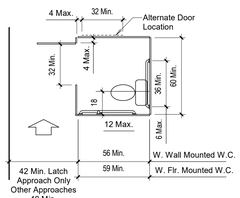

Standard Stall

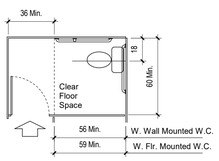

Standard Stall (End Of Row)

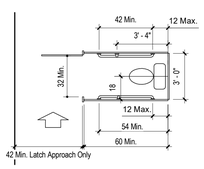

Ambulatory Stall

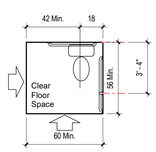

Clear Floor Space At Water Closet

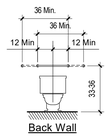

Grab Bars At Water Closets

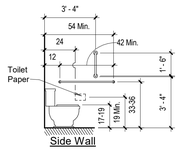

Grab Bars At Water Closets

D Clearances and Drinking Fountain

Scale: 1/4" = 1'-0"

E Clearances at Toilet Rooms

Scale: 1/4" = 1'-0"

bhd ARCHITECTS
www.bhdarchitects.com
Phone 801.571.0010
Fax 801.571.0303
Toll Free 888.571.0010
65 East Wadsworth Park Drive
Suite 205 Draper, Utah 84020

LICENSED ARCHITECT Late Theodore Lewis 15 Aug 2024 5978898-0301 STATE OF UTAH

THE CHURCH OF JESUS CHRIST OF LATTER-DAY SAINTS

Orem YSA 3rd 10 Ward Building
Orem UT YSA 3rd Stake

Approx. 1700 West 575 South
Vineyard, Utah 84059

Owner #: 370-187x
Plan Series: 2024 10 Ward SIC
County Parcel: 37:226:0001
BID #: 2344
Date: 15 Aug 2024

Drawing Issue and Revision Schedule

#	Date	Description
1	15 Aug 2024	Bid Drawings

General Information

G002

Occupancy Schedule - Rooms by Occupant Load Factor

Name	Number	Area	Occupancy	OLF	Number of Occ
Interview	101	58 SF	B	20	2.90
Interview	102	58 SF	B	20	2.90
Bishop	103	183 SF	B	150	1.22
Bishop	104	183 SF	B	150	1.22
Waiting	105	173 SF	B	30	5.77
Clerk	106	119 SF	B	150	0.80
Room	107	296 SF	A-3	7	42.32
Room	108	458 SF	A-3	7	65.47
Room	109	300 SF	A-3	7	42.87
Room	110	458 SF	A-3	7	65.47
Room	112	300 SF	A-3	7	42.87
Room	113	460 SF	A-3	7	65.69
Serving Area	114	228 SF	B	15	15.20
Room	117	235 SF	A-3	20	11.75
Foyer Seating	120	77 SF	A-3	7	11.01
Foyer Seating	120	77 SF	A-3	7	11.01
Clerk	122	146 SF	B	150	0.97
Interview	123	74 SF	B	20	3.68
Interview	124	87 SF	B	20	4.33
Stake President	125	179 SF	B	150	1.20
Waiting	126	338 SF	B	30	11.25
High Council	128	539 SF	A-3	15	35.96
Materials Center	131	343 SF	B	150	2.29
Bishop	132	180 SF	B	150	1.20
Interview	133	57 SF	B	20	2.85
Interview	134	57 SF	B	20	2.85
Bishop	135	180 SF	B	150	1.20
Waiting	136	170 SF	B	30	5.67
Clerk	137	117 SF	B	150	0.78
Room	139	321 SF	A-3	7	45.87
Room	140	321 SF	A-3	7	45.87
Chapel	146	1614 SF	A-3	7	230.52
Cultural Center	147	1406 SF	A-3	7	200.92
Cultural Center	151	1423 SF	A-3	7	203.31
Interview	158	58 SF	B	20	2.91
Interview	159	58 SF	B	20	2.91
Bishop	160	183 SF	B	150	1.22
Waiting	161	173 SF	B	30	5.77
Clerk	162	119 SF	B	150	0.80
Bishop	163	183 SF	B	150	1.22
Room	164	283 SF	A-3	7	40.45
Room	165	444 SF	A-3	7	63.36

Occupancy Schedule - Rooms by Occupant Load Factor

Name	Number	Area	Occupancy	OLF	Number of Occ
Room	166	285 SF	A-3	7	40.72
Room	167	444 SF	A-3	7	63.36
Room	168	284 SF	A-3	7	40.64
Room	169	443 SF	A-3	7	63.24
Serving Area	172	266 SF	B	15	17.73
Interview	173	58 SF	B	20	2.90
Interview	174	58 SF	B	20	2.90
Bishop	175	178 SF	B	150	1.19
Waiting	176	173 SF	B	30	5.77
Clerk	177	120 SF	B	150	0.80
Bishop	178	218 SF	B	150	1.45
Foyer Seating	179	77 SF	A-3	7	11.01
Foyer Seating	179	77 SF	A-3	7	11.01
Technology	181	86 SF	B	150	0.57
Room	183	293 SF	A-3	20	14.67
Interview	184	58 SF	B	20	2.90
Interview	185	58 SF	B	20	2.90
Bishop	186	183 SF	B	150	1.22
Waiting	187	173 SF	B	30	5.77
Clerk	188	121 SF	B	150	0.81
Bishop	189	183 SF	B	150	1.22
					1600.60

Occupant Load

Symbol Legend

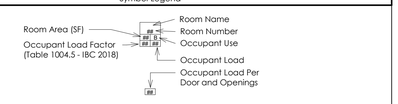

Fire Extinguisher Schedule

FE — Fire Extinguisher Cabinet w/ 4A-60BC Fire Extinguisher.

FE — Wall Mounted (With Hook) Fire Extinguisher 4A-60BC.

Rostrum 155 Occupancy Schedule

Item	Count	Occupants	Total Occupants
Pew P1	2	3	6
Pew P2	2	3	6
Pew P3	4	4	16
Pew P5	3	4	12
Pew P7	1	6	6
Wheelchair Space	1	1	1
Organ	1	1	1
Piano	1	1	1
			49

Chapel 153 Occupancy Schedule

Item	Count	Occupants	Total Occupants
Pew P4	4	4	16
Pew P6	16	5	80
Pew P8	2	7	14
Pew P9	5	12	60
Wheelchair Space	5	1	5
			175

Rostrum 145 Occupancy Schedule

Item	Count	Occupants	Total Occupants
Pew P1	2	3	6
Pew P2	2	3	6
Pew P3	4	4	16
Pew P5	3	4	12
Pew P7	1	6	6
Wheelchair Space	1	1	1
Organ	1	1	1
Piano	1	1	1
			49

Occupancy Summary - Totals

Occupant Type	Number of Occupants
Chapel 153 Pews and Wheelchairs	175
Room Occupancies by OLF	1,600
Rostrum 146 Pews and Wheelchairs	49
Rostrum 155 Pews and Wheelchairs	49
	1,873

Plumbing Fixtures Calculations

Occupancy/Use	Occupants			Water Closets				Lavatories				Drinking Fountains		Service Sinks
	Total Occupants	Male	Female	Male Ratio	Male Required	Female Ratio	Female Required	Male Ratio	Male Required	Female Ratio	Female Required	Ratio	Required	
Business (B)	130	65	65	1 per 25 for first 50, 1 per 50 above 50	2.30	1 per 25 for first 50, 1 per 50 above 50	2.30	1 per 40 for first 80, 1 per 80 above 80	1.63	1 per 40 for first 80, 1 per 80 above 80	1.63	1 per 100	1.30	
Assembly (A-3)	1,743	872	872	1 per 150	5.81	1 per 75	11.63	1 per 200	4.36	1 per 200	4.36	1 per 1,000	1.74	1
Required Subtotals	**1,873**				8.11		13.93		5.99		5.99		3.04	1
Required Totals					**9**		**14**		**6**		**6**		**4**	**1**
Provided Totals					**9**		**14**		**6**		**6**		**4**	**2**

2021 IBC Code Requirements Information

Code Item Reference	Building Design	Code Requirement or Reference
Governing Building Codes	Building Code: Plumbing Code: Mechanical Code: Electrical Code: Fire Code: Energy Conservation: Accessibility:	2021 International Building Code [IBC] with Utah State Amendments 2021 International Plumbing Code [IPC] 2021 International Mechanical Code [IMC] 2020 National Electrical Code [NEC] 2021 International Fire Code [IFC] 2021 International Energy Conservation Code [IECC] 2009 ANSI A117.1 & 2021 IBC
Occupancy	A3	Accessory Occupancies (508.2)
Total Occupancy	1,873 occupants	See Occupancy Schedules and Occupancy Summary on this Sheet.
Construction Type Chapter 6	III-B Fire sprinkled 2-hour rated non-combustible exterior bearing walls. [Non-combustibility achieved with fire-retardant treated wood framing.]	Table 601
Height	Actual height: 32'-10"	Maximum allowable height: 40'-0" [Table 504.3)
Fire Sprinklers Section 903.2.3 Group E	Fully automatic fire sprinkler system provided.	903.2.1.3 Automatic sprinkler systems required in A-3 Occupancies.
Fire Barriers	Not provided.	Not required.
Fire Walls	Not provided.	Not required.
Building Area	Ground Floor: 32,713 sf	Allowable: 45,125 sf [Table 506.2 with allowable area increases]
	Equipment Platform: 5,593 sf	
Exit Access Travel Distance	142 feet.	250 feet allowable (Table 1017.2)
Common Path of Egress Travel	41 feet.	75 feet allowable (Table 1006.2.1)

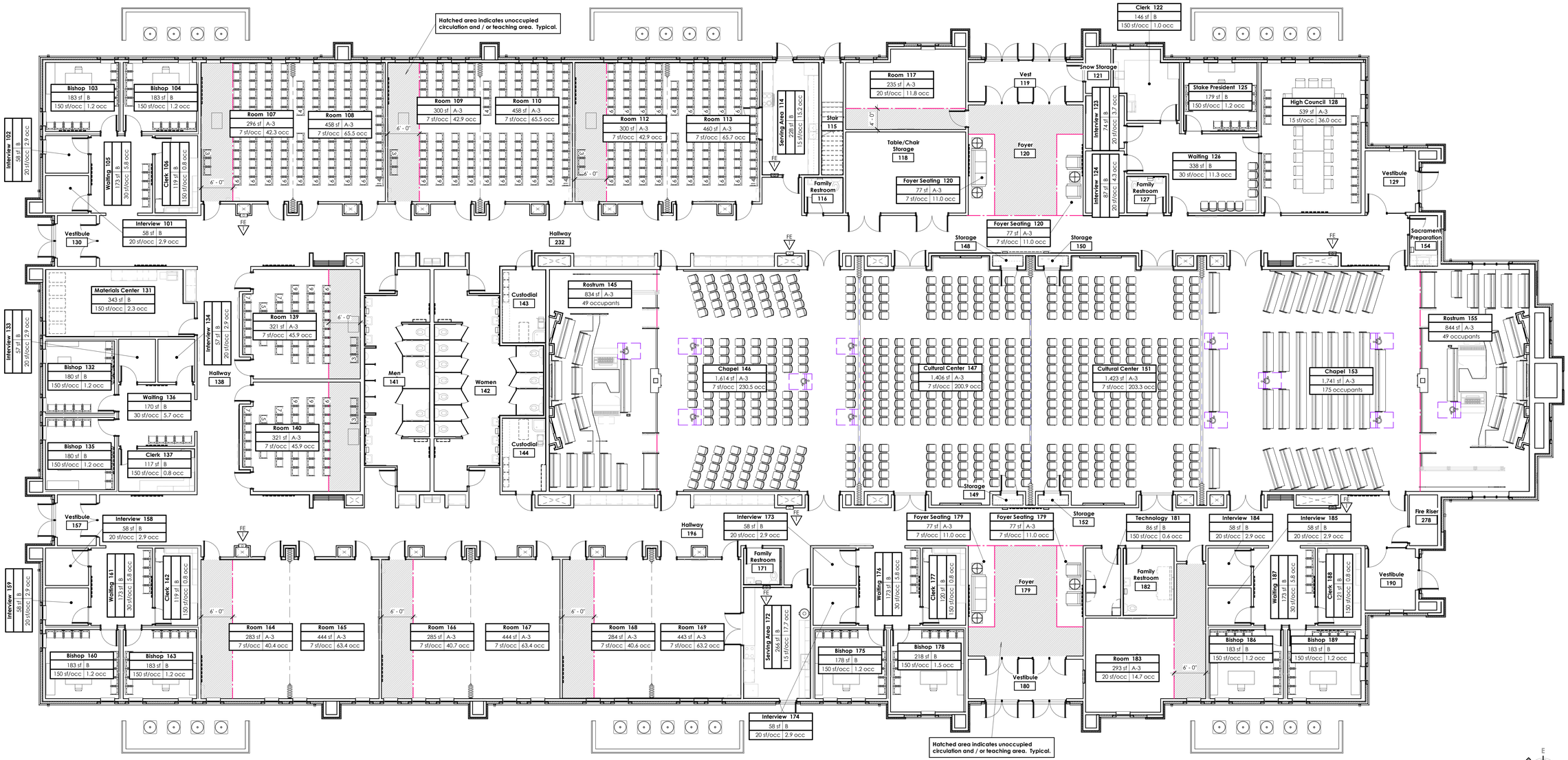

1 Main Floor Occupancy Plan

Scale: 1/8" = 1'-0"

bhd ARCHITECTS
www.bhdarchitects.com
Phone 801.571.0010
Fax 801.571.0303
Toll Free 888.571.0010
65 East Wadsworth Park Drive
Suite 205 Draper, Utah 84020

LICENSED ARCHITECT
Lafe Theodore Harris
15 Aug 2024
7078498-0301
STATE OF UTAH

THE CHURCH OF JESUS CHRIST OF LATTER-DAY SAINTS

Orem YSA 3rd 10 Ward Building
Orem UT YSA 3rd Stake

Approx. 1700 West 575 South
Vineyard, Utah 84059

Owner #: 590-1876
Plan Series: 2024 10 Ward SFC
County Parcel: 59-226-0001
BHD #: 2344
Date: 13 Aug 2024

Drawing Issue and Revision Schedule		
#	Description	Date
1	65 Drawings	13 Aug 2024

Code Analysis Plan and General Information

G101

Printed: 8/17/2024 4:54:52 PM

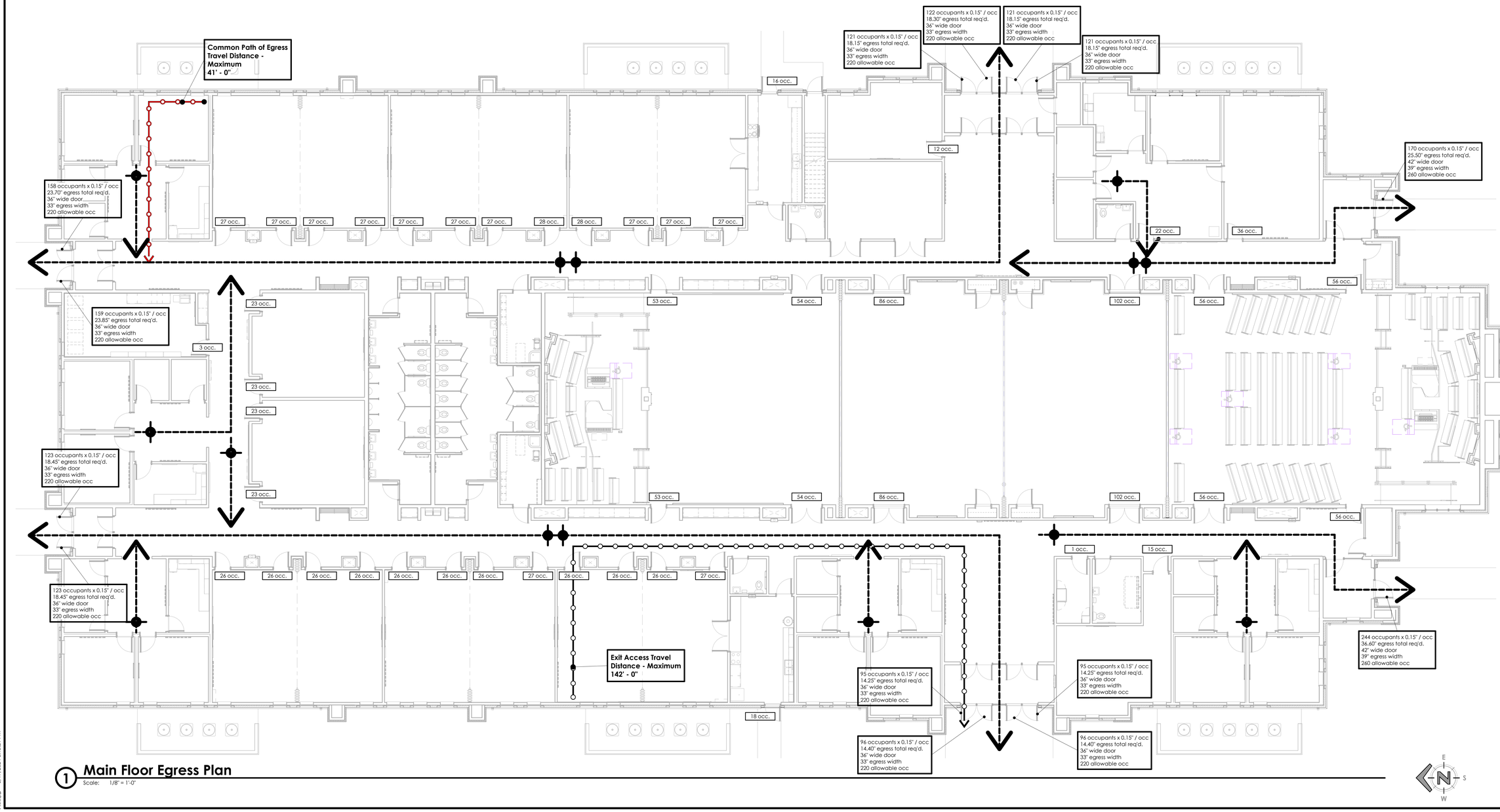

1 Main Floor Egress Plan

Scale: 1/8" = 1'-0"

bhd ARCHITECTS
www.bhdarchitects.com
Phone 801.571.0010
Fax 801.571.0303
Toll Free 888.571.0010
65 East Wadsworth Park Drive
Suite 205 Draper, Utah 84020

LICENSED ARCHITECT
Lafe Theodore Harris
15 Aug 2024
7078498-0301
STATE OF UTAH

THE CHURCH OF JESUS CHRIST OF LATTER-DAY SAINTS

Orem YSA 3rd 10 Ward Building
Orem UT YSA 3rd Stake

Approx. 1700 West 575 South
Vineyard, Utah 84059

Owner #: 390-1876
Plan Series: 2024 10 Ward SC
County Parcel: 59:220:0001
BHD #: 2344
Date: 15 Aug 2024

Drawing Issue and Revision Schedule

#	Date	Description
1	15 Aug 2024	Bid Drawings

Main Floor Egress Plan

G102

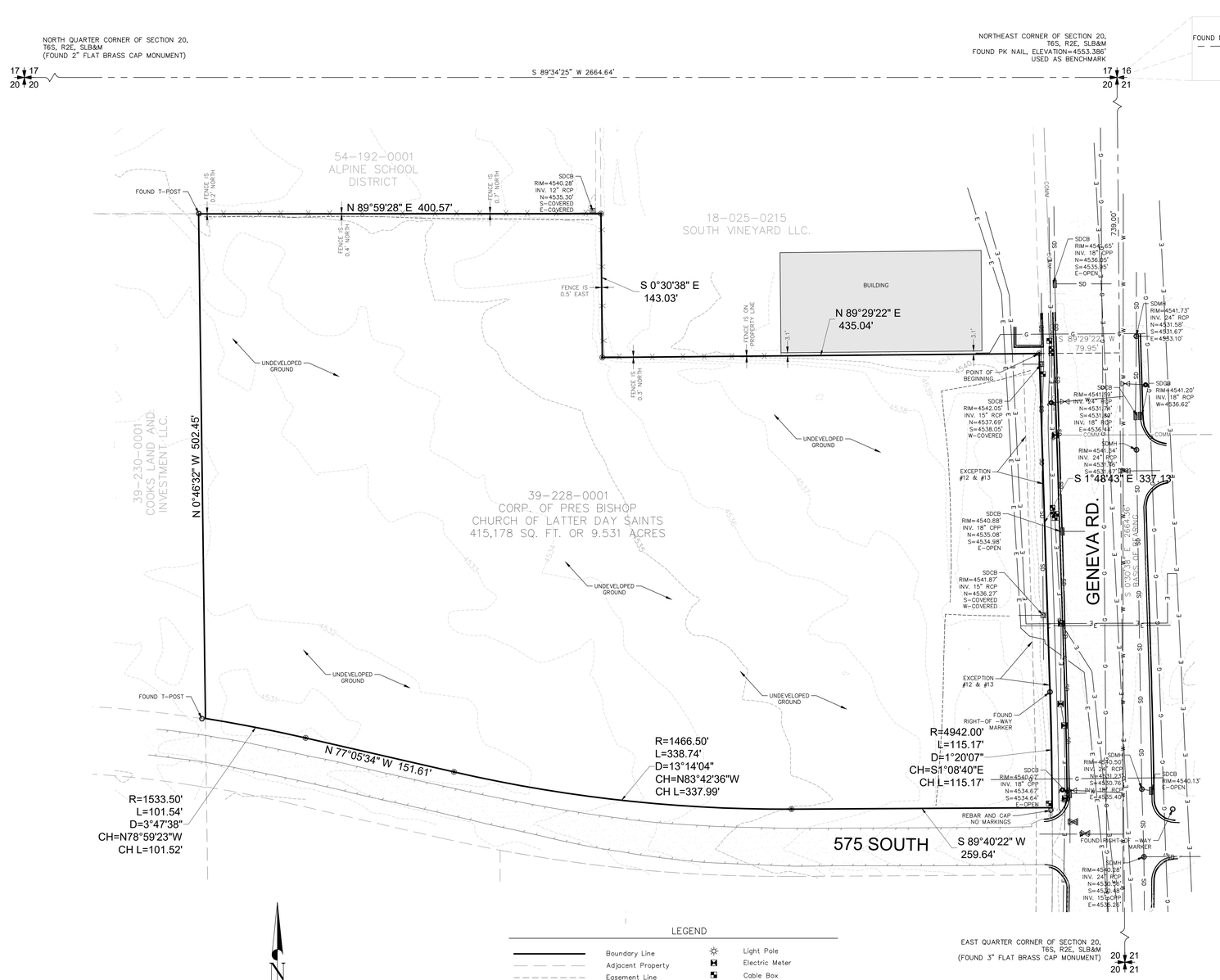



VICINITY MAP
NOT TO SCALE

COMMITMENT NUMBER: BT-20738
COMMITMENT DATE: JULY 13, 2023 AT 8:00 AM
TO: CORPORATION OF THE PRESIDING BISHOP OF THE CHURCH OF JESUS CHRIST OF LATTER-DAY SAINTS, A UTAH CORPORATION SOLE
BARTLET TITLE INSURANCE AGENCY, INC.

THIS IS TO CERTIFY THAT THIS MAP OR PLAT AND THE SURVEY ON WHICH IT IS BASED WERE MADE IN ACCORDANCE WITH THE 2021 MINIMUM STANDARD DETAIL REQUIREMENTS FOR ALTA/NSPS LAND TITLE SURVEYS, JOINTLY ESTABLISHED AND ADOPTED BY ALTA AND NSPS, AND INCLUDES ITEMS 1, 2, 4, 5, 8, 11, AND 13 OF THE TABLE A THEREOF. THE FIELD WORK WAS COMPLETED ON SEPTEMBER 1, 2023.

Date of Plat: SEPTEMBER 15, 2023

Professional Land Surveyor
Nathan B. Weber, PLS
License No. 5152762

LEGAL DESCRIPTION

LOT 1, 575 SOUTH SUBDIVISION, PLAT "A", VINEYARD CITY, UTAH COUNTY, ACCORDING TO THE OFFICIAL PLAT THEREOF ON FILE AND OF RECORD IN THE UTAH COUNTY RECORDER'S OFFICE, UTAH.

SCHEDULE B, PART II EXCEPTIONS

ITEMS 1–10 ARE NOT SHOWN INTENTIONALLY AS THEY ARE NOT SURVEY ITEMS.

11. EASEMENT IN FAVOR OF THE MOUNTAIN STATES TELEPHONE AND TELEGRAPH CO, RECORDED JANUARY 2, 1919 AS ENTRY NO. 63 IN BOOK 180 AT PAGE 560 OF OFFICIAL RECORDS.

SURVEY FINDINGS: NOT PLOTTED, BLANKETS ENTIRE SITE ALONG WITH OTHER GROUND.

12. SLOPE EASEMENT AGREEMENT GRANTED TO THE UTAH DEPARTMENT OF TRANSPORTATION, RECORDED FEBRUARY 4, 2011 AS ENTRY NO. 11244:2011 OF OFFICIAL RECORDS.

SURVEY FINDINGS: PLOTTED, AFFECTS THE EASTERLY PORTION OF THIS SITE.

13. EASEMENT GRANTED TO UTAH DEPARTMENT OF TRANSPORTATION FOR THE PURPOSE OF CONSTRUCTING IRRIGATION FACILITIES INCLUDING PIPELINE IMPROVEMENTS, RECORDED JUNE 27, 2011 AS ENTRY NO. 46560:2011 OF OFFICIAL RECORDS.

SURVEY FINDINGS: PLOTTED, AFFECTS THE EASTERLY PORTION OF THIS SITE.

NOTES:

THE BASIS OF BEARING IS SOUTH 0°30'38" EAST BETWEEN THE FOUND NORTHEAST CORNER AND THE EAST QUARTER CORNER OF SECTION 20, TOWNSHIP 6 SOUTH, RANGE 2 EAST, SALT LAKE BASE AND MERIDIAN, UTAH COUNTY, UTAH AS SHOWN. THE SURVEY CONTROL WAS ESTABLISHED WITH GPS. THE GPS DATA WAS MEASURED ON THE UTAH STATE PLANE CENTRAL ZONE USF NAD83 SYSTEM AND WAS THEN PROJECTED TO A LOW DISTORTION GROUND SYSTEM FOR THIS SURVEY. A UAS SYSTEM WAS USED TO ASSIST IN MEASURING AND MAPPING THE PROPERTY AND AN ORTHO-RECTIFIED PHOTO OF THE SITE WAS USED FOR MAPPING FEATURES SUCH AS ROADWAYS AND WATERWAYS.

1. THE PURPOSE OF THIS SURVEY IS TO RETRACE AND MONUMENT THE BOUNDARY OF THE DESCRIBED PROPERTY ACCORDING TO THE OFFICIAL RECORDS AND THE LOCATION OF PERTINENT EXISTING IMPROVEMENTS LOCATED ON THE GROUND.

2. THIS DOES NOT REPRESENT A TITLE SEARCH BY THE SURVEYOR. TITLE INFORMATION WAS PROVIDED BY OTHERS FOR THE SUBJECT PROPERTY.

3. THE LOCATION OF UNDERGROUND UTILITIES AS SHOWN HEREON ARE BASE ON ABOVE GROUND STRUCTURES. LOCATIONS OF UNDERGROUND UTILITIES/STRUCTURES MAY VARY FROM LOCATIONS SHOWN HEREON. ADDITIONAL BURIED UTILITIES/STRUCTURES MAY BE ENCOUNTERED. NO EXCAVATIONS WERE MADE DURING THE PROGRESS OF THIS SURVEY TO LOCATE BURIED UTILITIES/STRUCTURES. BEFORE EXCAVATIONS ARE BEGUN, PLEASE CONTACT APPROPRIATE AGENCIES.

4. THE PURPORTED ADDRESS FOR THIS SITE IS 750 EAST 575 SOUTH, VINEYARD, UTAH 84057 BASED ON DOCUMENTATION PROVIDED AT THE TIME OF THE SURVEY.

DIAMOND LAND SURVEYING
6891 South 700 West Ste. 150
Midvale, Utah 84047
Phone (801) 266-5099 Fax (801) 266-5032
office@diamondlandsurveying.com
www.diamondlandsurveying.com

Boundary Surveys
Topography Surveys
Subdivisions
Construction Staking
A.L.T.A. & A.C.S.M. Surveys

LOCATED IN THE NORTHEAST QUARTER OF SECTION 20, TOWNSHIP 6 SOUTH, RANGE 2 EAST, SALT LAKE BASE AND MERIDIAN

bhd ARCHITECTS
www.bhdarchitects.com
Phone 801.571.0010
Fax 801.571.0303
Toll Free 888.571.0010
65 East Wadsworth Park Drive
Suite 205 Draper, Utah 84020

THE CHURCH OF JESUS CHRIST OF LATTER-DAY SAINTS

Orem YSA 3rd 10 Ward Building
Orem UT YSA 3rd Stake
Approx 1700 West 575 South
Vineyard, Utah 84059

Owner #: 5901876
Plan Series: 2024 10 Ward S.C.
County Parcel: 39-228-0001
BHD #: 2344
Date: 13 Aug 2024

Drawing Issue and Revision Schedule		
#	Date	Description
1	13 Aug 2024	Bid Documents

Site Survey

C101

Plotted: 12 Aug 2024 12:41 PM

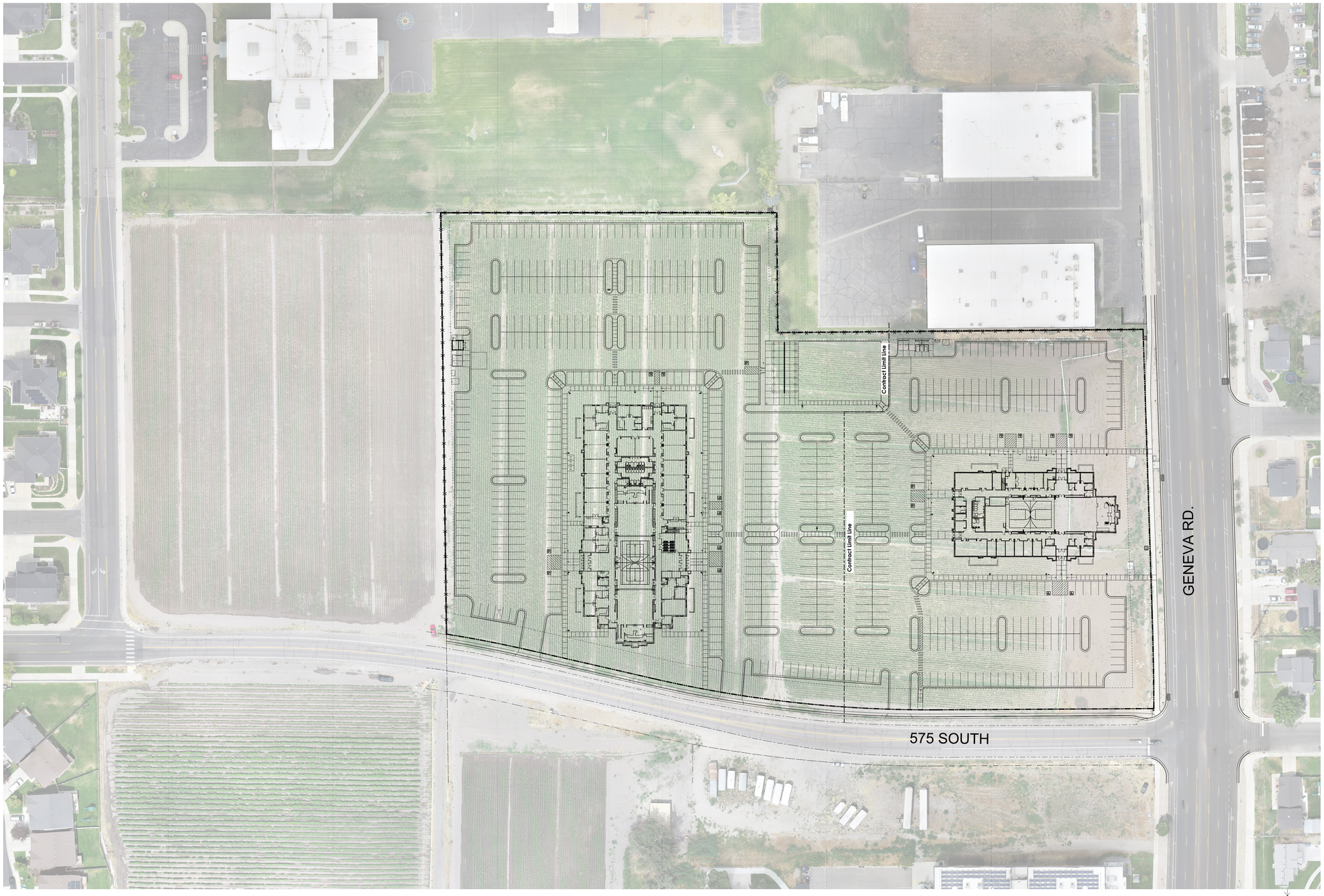

1 Site Existing Conditions Plan

Scale: 1" = 50'-0"

Photo taken 10 Aug 2024

Click here for drone data

0' 25' 50' 100' 200'

bhd ARCHITECTS
www.bhdarchitects.com
Phone 801.571.0010
Fax 801.571.0303
Toll Free 888.571.0010
65 East Wadsworth Park Drive
Suite 205 Draper, Utah 84020

LICENSED ARCHITECT
Lafe Theodore Harris
15 Aug 2024
7738898-0301
STATE OF UTAH

THE CHURCH OF JESUS CHRIST OF LATTER-DAY SAINTS

Orem YSA 3rd 10 Ward Building
Orem UT YSA 3rd Stake

Approx. 1700 West 575 South
Vineyard, Utah 84059

Date: 13 Aug 2024
BID #: 2344
County Parcel: 57-226-0001
Plan Series: 2024 10 Ward SC
Owner #: 590-1818

Drawing Issue and Revision Schedule

#	Date	Description
1	13 Aug 2024	Bid Documents

Site Existing Conditions Plan

C102

Printed: 12 Aug 2024 8:53 PM

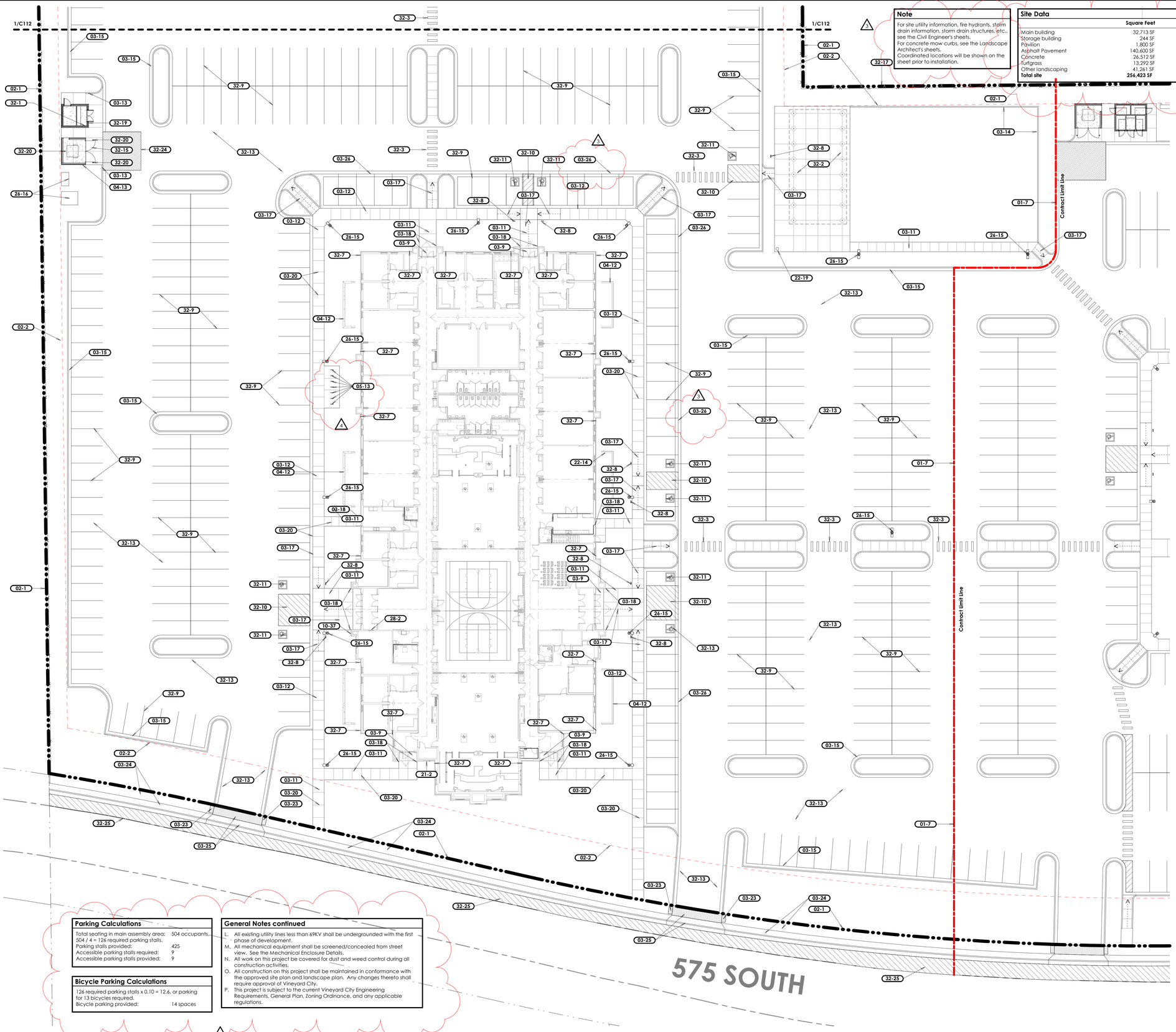

Note

For site utility information, fire hydrants, storm drain information, storm drain structures, etc., see the Civil Engineer's sheets.
For concrete mow curbs, see the Landscape Architect's sheets.
Coordinated locations will be shown on the sheet prior to installation.

Site Data

	Square Feet	% of Site
Main building	32,713 SF	12.8%
Storage building	244 SF	0.1%
Pavilion	1,800 SF	0.7%
Asphalt Pavement	140,600 SF	54.8%
Concrete	26,512 SF	10.3%
Turfgrass	13,292 SF	5.2%
Other landscaping	41,261 SF	16.1%
Total site	**256,423 SF**	**5.89 acres**

General Notes

A. All noted items are new unless noted otherwise.
B. The contractor shall verify all existing site conditions prior to bidding. Coordinate all work affecting adjacent properties with the respective property owners prior to any demolition or construction work. Repair and replace all existing items on adjacent properties damaged or affected during construction to the satisfaction of the property owner.
C. Refer to ConsLog for Information Available to Bidders, including the geotechnical report. Please note that the geotechnical report found groundwater at relatively shallow depths. The Contractor will be responsible for all required shoring, stabilization, and dewatering required for construction.
D. The Contractor shall enclose the entire area of work with a temporary fence and maintain a safe pedestrian route along the rights of way adjacent to the site throughout construction.
E. Omitted.
F. Omitted.
G. Omitted.
H. Refer to the Specifications for required locations of concrete control joints and expansion joints. Submit a proposed control joint and expansion joint plan to the Architect for approval prior to installation of site concrete.
I. The new building and parking lot are parallel or perpendicular to true north.
J. The contractor shall install all components of the building and site to meet accessibility standards as shown in 2017 ICC A117.1.
K. Omitted.
L. In 575 South right-of-way, patch roadway as required by city standards after utilities and other right-of-way improvements have been removed, modified, or added.

Overexcavation and Fill Notes

A. For Overexcavation and Fill Detail, see F/C503.
B. Remove all unconsolidated fill and deleterious materials from the entire site prior to construction. Remove and stockpile topsoil as necessary for landscaped areas. For depth and locations of topsoil, see the Landscape Sheets and Specification Sections.
C. In the area of the building and mechanical enclosures:
   a. Overexcavate the entire footprint and 60" beyond at a 1:1 slope to the elevation as noted on F/C503.
   b. Install imported structural fill up to the bottom of footing level.
   c. Install imported structural fill up to the base course under the building slab.
D. At the storage building:
   a. Excavate the entire footprint of the storage building to an elevation 1 foot below the bottom of footings.
   b. Install imported structural fill up to the bottom of footing level.
   c. Install structural fill up to the base course under the storage building slab.
E. At the pavilion:
   a. Excavate the chosen foundation system to bear on undisturbed native soils.
   b. Slab may be overexcavated to match footing overexcavation height, or may be excavated only to the depth of the base below the slab.
   c. The pavilion slab shall have base to match the concrete slabs and sidewalks as shown on 1/C501.
F. At the dumpster enclosure:
   a. Excavate the entire footprint of the dumpster enclosure to an elevation 1 foot below the bottom of footings.
   b. Install imported structural fill up to the bottom of footing level.
   c. Install structural fill to raise the grade to the base course under the dumpster slab and pad. See the Site Details for base course and concrete slab thickness.
G. At a 20 foot x 15 foot area in front of the dumpster [as shown on the Site Architectural Plans], install (2) 3" layers of asphalt with a 14" minimum base.
H. Install 8" crushed rock base beneath sidewalks at building entries, full width of sidewalk and full length of sidewalk from the building to the perimeter sidewalk.
I. All crushed rock base shall be 3/4" and shall be compacted by procedural compaction.
J. At sidewalks and all site concrete pads and elements:
   a. Overexcavate as noted in Item B. above.
   b. Install subbase up to the base level.
   c. Install 4" aggregate base below all site concrete elements, pads, and sidewalks. See site details.
K. At asphalt paving:
   a. Overexcavate as noted in Item B. above.
   b. Install subbase up to the base level.
   c. Install 3" asphalt paving over 9" base over entire parking lot (excluding the area in front of the dumpster enclosure).
L. All structural fill shall be imported.
M. Install imported structural fill full depth at all utility trenches.
N. All topsoil shall be imported. Provide topsoil tests and amendments as required by the Landscape Sheets and Specifications. Areas of landscaping without planting may have existing topsoil used as fill and may have existing topsoil left in place where compatible with finished grades.
O. All compacted soils shall be density tested.
P. On-site native soils may be used as fill only in landscape areas.
Q. For the purposes of bidding, assume no unconsolidated fill or deleterious materials other than grubbing and typical removal of organics, etc., beyond that noted in the geotechnical report. A further geotechnical investigation will be completed shortly and the contract adjusted as necessary for its findings.

Keyed Notes

01-7 Contract limit line. All work shown on the other side of the contract limit line is not in this project's scope of work and is shown for reference only. Coordinate all work at the contract limit line with the other project's contractors. Refer to the other site sheets for specific requirements for items that extend past the contract limit line.
02-1 Existing property line. See survey.
02-2 Existing utility easement. See survey and site utility plan.
03-9 Building landing. 2% slope maximum.
03-11 New concrete sidewalk. See A & H/C501. Typical.
03-12 New integral sidewalk, curb, and gutter. See B/C501. See Grading and Drainage Plan for infall / outfall of gutter.
03-13 Transition height of curb from full height to even with sidewalk and gutter in 5'-0". See E/C501.
03-14 New concrete mow strip. Typical. See K/C501.
03-15 New concrete curb & gutter - typical. See typical details C501 & infall / outfall notation on the Grading & Drainage Site Plans.
03-17 Sloped section of concrete sidewalk at <5% slope. See grading plan for exact slope.
03-18 Align sidewalk with building foundation wall.
03-20 New control joint in concrete flatwork. See H/C501.
03-23 Detecable warning panel. Detectable warnings shall consist of a surface of truncated domes and shall comply with city standards.
03-24 Concrete curb, gutter, and sidewalk, and base, per city standards.
03-25 Concrete drive approach and base per city standards. Sidewalk concrete at all drive approaches shall be colored per city standards.
03-26 Concrete waterway. See G/C501 and Civil Sheets.
04-12 Mechanical enclosure wall. See C and D/C504 and Structural Sheets.
04-13 Dumpster enclosure wall. See 1/C503 and Structural Sheets.
05-13 New stainless steel bike rack. See L/C501.
10-37 New knox box 3200 series recessed in brick (verify type and location with fire department).
21-2 Fire department connection with locking knox plugs. Coordinate model with Fire Department requirements.
22-14 Natural Gas Meter. See Plumbing Sheets.
22-19 New accessible drinking fountain. Install per manufacturer's recommendations. 30" x 48" forward approach clear floor space shown with dashed line. See utility sheets.
26-15 New pole light and concrete base. See D/C503 and electrical sheets.
26-16 New concrete transformer pad and CT can per power company requirements. See Electrical Sheets.
28-2 Fire alarm control panel location. See A101 and electrical sheets.
32-1 New irrigation controller. See landscape sheets.
32-2 New pavilion, see Sheets C811, C812, C813, and C814.
32-3 New painted crosswalk.
32-7 New roof drain box at downspout. See utility sheets and C/C502. Typical.
32-8 New accessible parking sign. See A/C502.
32-9 New painted parking lines. Parking lines shall be 4" wide reflective white paint centered on top. Typical.
32-10 New accessible parking access aisle. Paint lines shall be 4" wide reflective white, at a 45A° angle, and have 2'-0" spacing.
32-11 New blue & white painted accessible parking symbol.
32-13 New asphalt paving - typical. See F/C501 and overexcavation and fill notes.
32-15 6'-0" tall steel dumpster gates. See 1/C503.
32-17 New 6'-0" vinyl privacy fence with 12" x 12" mow strip. See E/C503.
32-19 New storage building. See C801.
32-20 New bollard. See B/C502.
32-24 (2) 3" layers of asphalt over 14" aggregate base in shaded area.
32-25 New asphalt paving, striping, road base, and subgrade preparation per city standards. Sawcut and remove edge of existing asphalt paving per city standards.

Parking Calculations

Total seating in main assembly area:	504 occupants
504 / 4 = 126 required parking stalls.	
Parking stalls provided:	425
Accessible parking stalls required:	9
Accessible parking stalls provided:	9

Bicycle Parking Calculations

126 required parking stalls x 0.10 = 12.6, or parking for 13 bicycles required.
Bicycle parking provided: 14 spaces

General Notes continued

L. All existing utility lines less than 69KV shall be undergrounded with the first phase of development.
M. All mechanical equipment shall be screened/concealed from street view. See the Mechanical Enclosure Details.
N. All work on this project be covered for dust and weed control during all construction activities.
O. All construction on this project shall be maintained in conformance with the approved site plan and landscape plan. Any changes thereto shall require approval of Vineyard City.
P. This project is subject to the current Vineyard City Engineering Requirements, General Plan, Zoning Ordinance, and any applicable regulations.

1 **Site Plan - South**
Scale: 1" = 20'-0"

0' 10' 20' 40' 80'

W N E S

bhd ARCHITECTS
www.bhdarchitects.com
Phone 801.571.0010
Fax 801.571.0303
Toll Free 888.571.0010
65 East Wadsworth Park Drive
Suite 205 Draper, Utah 84020

LICENSED ARCHITECT Lafe Theodore Harris 6398-0301 29 Jan 2025 STATE OF UTAH

THE CHURCH OF JESUS CHRIST OF LATTER-DAY SAINTS

Orem YSA 3rd 10 Ward Building
Orem UT YSA 3rd Stake

Approx. 1700 West 575 South
Vineyard, Utah 84059

Owner #: 590-1876
Plan Series: 2024 10 Ward SC
County Parcel: 59-228-0001
BHD #: 2344
Date: 13 Aug 2024

Drawing Issue and Revision Schedule		
	Date	Description
4	29 Nov 2024	Site Plan Review Responses
3	3 Sep 2024	Addendum #2
2	27 Aug 2024	Addendum #1
1	15 Aug 2024	Bid Documents

Site Plan -South

C111

Printed: 1/29/2025 5:47:06 PM

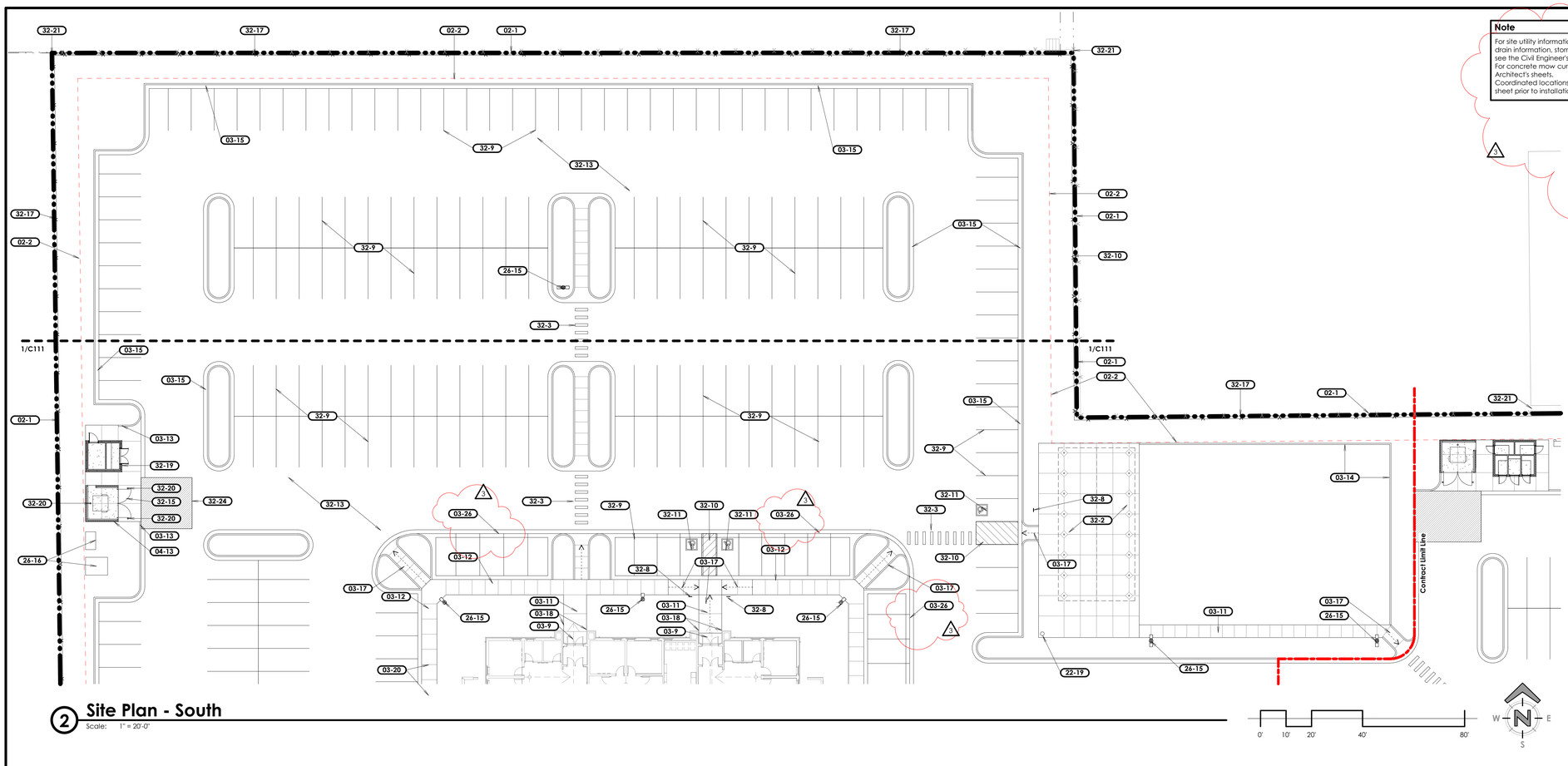

2 Site Plan - South

Scale: 1" = 20'-0"

Note

For site utility information, fire hydrants, storm drain information, storm drain structures, etc., see the Civil Engineer's sheets.
For concrete mow curbs, see the Landscape Architect's sheets.
Coordinated locations will be shown on the sheet prior to installation.

General Notes

A. All noted items are new unless noted otherwise.
B. The contractor shall verify all existing site conditions prior to bidding. Coordinate all work affecting adjacent properties with the respective property owners prior to any demolition or construction work. Repair and replace all existing items on adjacent properties damaged or affected during construction to the satisfaction of the property owner.
C. Refer to ConsLog for Information Available to Bidders, including the geotechnical report. Please note that the geotechnical report found groundwater at relatively shallow depths. The Contractor will be responsible for all required shoring, stabilization, and dewatering required for construction.
D. The Contractor shall enclose the entire area of work with a temporary fence and maintain a safe pedestrian route along the rights of way adjacent to the site throughout construction.
E. Omitted.
F. Omitted.
G. Omitted.
H. Refer to the Specifications for required locations of concrete control joints and expansion joints. Submit a proposed control joint and expansion joint plan to the Architect for approval prior to installation of site concrete.
I. The new building and parking lot are parallel or perpendicular to true north.
J. The contractor shall install all components of the building and site to meet accessibility standards as shown in 2017 ICC A117.1.
K. Omitted.
L. In 575 South right-of-way, patch roadway as required by city standards after utilities and other right-of-way improvements have been removed, modified, or added.

Overexcavation and Fill Notes

A. For Overexcavation and Fill Detail, see F/C503.
B. Remove all unconsolidated fill and deleterious materials from the entire site prior to construction. Remove and stockpile topsoil as necessary for landscaped areas. For depth and locations of topsoil, see the Landscape Sheets and Specification Sections.
C. In the area of the building and mechanical enclosures:
   a. Overexcavate the entire footprint and 60" beyond at a 1:1 slope to the elevation as noted on F/C503.
   b. Install imported structural fill up to the bottom of footing level.
   c. Install imported structural fill up to the base course under the building slab.
D. At the storage building:
   a. Excavate the entire footprint of the storage building to an elevation 1 foot below the bottom of footings.
   b. Install imported structural fill up to the bottom of footing level.
   c. Install structural fill up to the base course under the storage building slab.
E. At the pavilion:
   a. Excavate the chosen foundation system to bear on undisturbed native soils.
   b. Slab may be overexcavated to match footing overexcavation height, or may be excavated only to the depth of the base below the slab.
   c. The pavilion slab shall have base to match the concrete slabs and sidewalks as shown on 1/C501.
F. At the dumpster enclosure:
   a. Excavate the entire footprint of the dumpster enclosure to an elevation 1 foot below the bottom of footings.
   b. Install imported structural fill up to the bottom of footing level.
   c. Install structural fill to raise the grade to the base course under the dumpster slab and pad. See the Site Details for base course and concrete slab thickness.
G. At a 20 foot x 15 foot area in front of the dumpster (as shown on the Site Architectural Plans), install (2) 3" layers of asphalt with a 14" minimum base.
H. Install 8" crushed rock base beneath sidewalks at building entries, full width of sidewalk and full length of sidewalk from the building to the perimeter sidewalk.
I. All crushed rock base shall be 3/4" and shall be compacted by procedural compaction.
J. At sidewalks and all site concrete pads and elements:
   a. Overexcavate as noted in Item B. above.
   b. Install subbase up to the base level.
   c. Install 4" aggregate base below all site concrete elements, pads, and sidewalks. See site details.
K. At asphalt paving:
   a. Overexcavate as noted in Item B. above.
   b. Install subbase up to the base level.
   c. Install 3" asphalt paving over 9" base over entire parking lot (excluding the area in front of the dumpster enclosure).
L. All structural fill shall be imported.
M. Install imported structural fill full depth at all utility trenches.
N. All topsoil shall be imported. Provide topsoil tests and amendments as required by the Landscape Sheets and Specifications. Areas of landscaping without planting may have existing topsoil used as fill and may have existing topsoil left in place where compatible with finished grades.
O. All compacted soils shall be density tested.
P. On-site native soils may be used as fill only in landscape areas.
Q. For the purposes of bidding, assume no unconsolidated fill or deleterious materials other than grubbing and typical removal of organics, etc., beyond that noted in the geotechnical report. A further geotechnical investigation will be completed shortly and the contract adjusted as necessary for its findings.

General Notes continued

L. All existing utility lines less than 69KV shall be undergrounded with the first phase of development.
M. All mechanical equipment shall be screened/concealed from street view. See the Mechanical Enclosure Details.
N. All work on this project be covered for dust and weed control during all construction activities.
O. All construction on this project shall be maintained in conformance with the approved site plan and landscape plan. Any changes thereto shall require approval of Vineyard City.
P. This project is subject to the current Vineyard City Engineering Requirements, General Plan, Zoning Ordinance, and any applicable regulations.

Parking Calculations

Total seating in main assembly area:	504 occupants.
504 / 4 = 126 required parking stalls.	
Parking stalls provided:	425
Accessible parking stalls required:	9
Accessible parking stalls provided:	9

Bicycle Parking Calculations

126 required parking stalls x 0.10 = 12.6, or parking for 13 bicycles required.
Bicycle parking provided: 14 spaces

Site Data

	Square Feet	% of Site
Main building	32,713 SF	12.8%
Storage building	244 SF	0.1%
Pavilion	1,800 SF	0.7%
Asphalt Pavement	140,600 SF	54.8%
Concrete	26,512 SF	10.3%
Turfgrass	13,292 SF	5.2%
Other landscaping	41,261 SF	16.1%
Total site	**256,423 SF**	**5.89 acres**

Keyed Notes

02-1 Existing property line. See survey.
02-2 Existing utility easement. See survey and site utility plan.
03-9 Building landing. 2% slope maximum.
03-11 New concrete sidewalk. See A & H/C501. Typical.
03-12 New integral sidewalk, curb, and gutter. See B/C501. See Grading and Drainage Plan for infall / outfall of gutter.
03-13 Transition height of curb from full height to even with sidewalk and gutter in 5'-0". See E/C501.
03-14 New concrete mow strip. Typical. See K/C501.
03-15 New concrete curb & gutter - typical. See typical details C501 & infall / outfall notation on the Grading & Drainage Site Plans.
03-17 Sloped section of concrete sidewalk at <5% slope. See grading plan for exact slope.
03-18 Align sidewalk with building foundation wall.
03-20 New control joint in concrete flatwork. See H/C501.
03-26 Concrete waterway. See G/C501 and Civil Sheets.
04-13 Dumpster enclosure wall. See 1/C503 and Structural Sheets.
22-19 New accessible drinking fountain. Install per manufacturer's recommendations. 30" x 48" forward approach clear floor space shown with dashed line. See utility sheets.
26-15 New pole light and concrete base. See D/C503 and electrical sheets.
26-16 New concrete transformer pad and CT can per power company requirements. See Electrical Sheets.
32-2 New pavilion, see Sheets C811, C812, C813, and C814.
32-3 New painted crosswalk.
32-8 New accessible parking sign. See A/C502.
32-9 New painted parking lines. Parking lines shall be 4" wide reflective white paint centered on top. Typical.
32-10 New accessible parking access aisle. Paint lines shall be 4" wide reflective white, at a 45° angle, and have 2'-0" spacing.
32-11 New blue & white painted accessible parking symbol.
32-13 New asphalt paving - typical. See F/C501 and overexcavation and fill notes.
32-15 6'-0" tall steel dumpster gates. See 1/C503.
32-17 New 6'-0" vinyl privacy fence with 12" x 12" mow strip. See E/C503.
32-19 New storage building. See C801.
32-20 New bollard. See B/C502.
32-21 Tie new vinyl fence into existing adjacent fence. Typical at all adjacent fences.
32-24 (2) 3" layers of asphalt over 14" aggregate base in shaded area.

bhd ARCHITECTS
www.bhdarchitects.com
Phone 801.571.0010
Fax 801.571.0303
Toll Free 888.571.0010
65 East Wadsworth Park Drive
Suite 205 Draper, Utah 84020

LICENSED ARCHITECT Lafe Theodore Harris 6378879-0301 STATE OF UTAH 29 Jan 2025

THE CHURCH OF JESUS CHRIST OF LATTER-DAY SAINTS

Orem YSA 3rd 10 Ward Building
Orem UT YSA 3rd Stake

Approx. 1700 West 575 South
Vineyard, Utah 84059

BHD #: 2344
Date: 15 Aug 2024
County Parcel: 59-228-0001
Plan Series: 2024 10 Ward LSC
Owner #: 590-187s

Drawing Issue and Revision Schedule

#	Date	Issue
5	29 Jan 2025	Site Plan Review Responses
4		
3	3 Sep 2024	Addendum #2
2	27 Aug 2024	Addendum #1
1	15 Aug 2024	Bid Documents

Site Plan - North

C112

Printed: 1/29/2025 5:42:55 PM

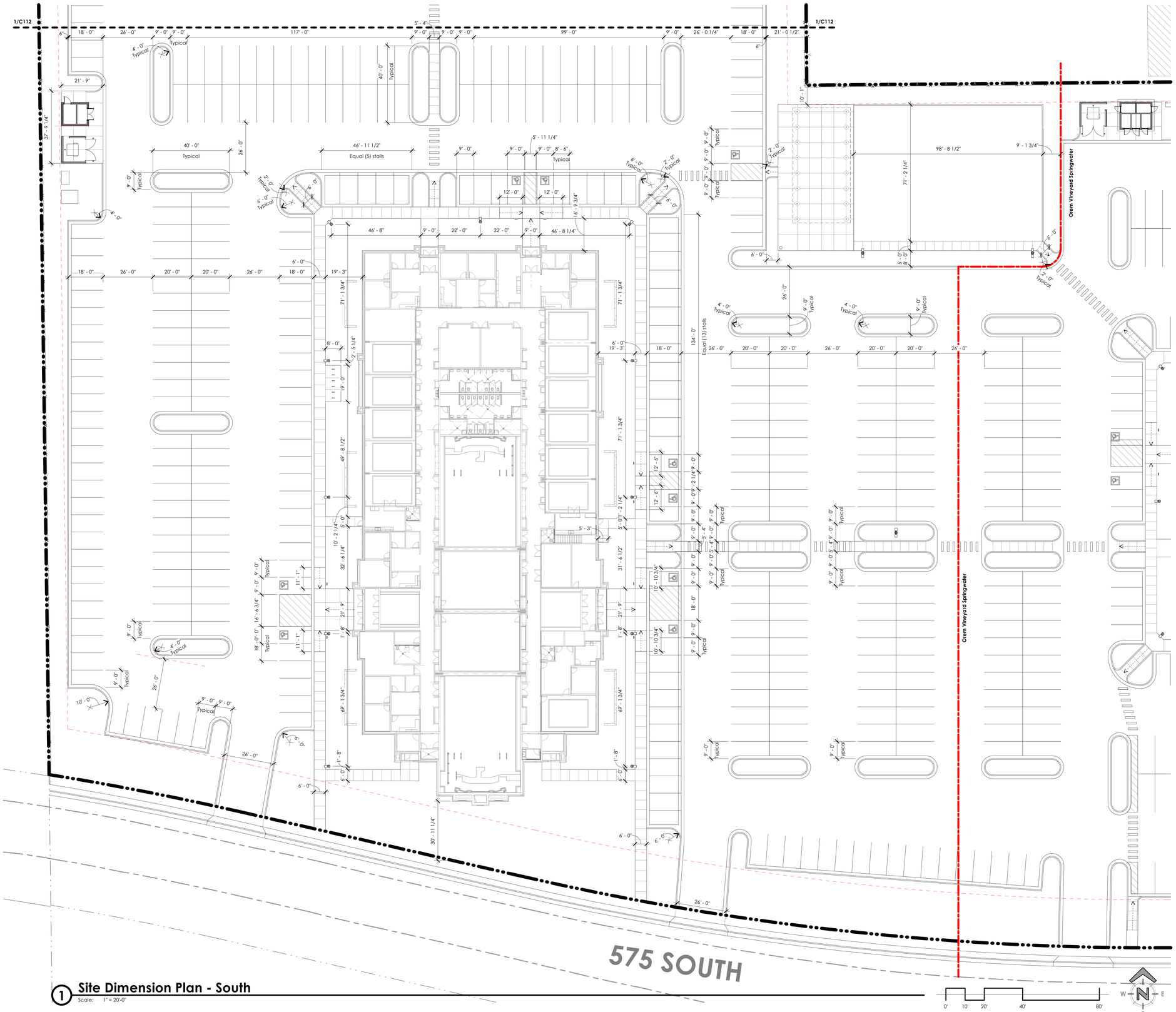

1 **Site Dimension Plan - South**
Scale: 1" = 20'-0"

bhd ARCHITECTS
www.bhdarchitects.com
Phone 801.571.0010
Fax 801.571.0303
Toll Free 888.571.0010
65 East Wadsworth Park Drive
Suite 205 Draper, Utah 84020

LICENSED ARCHITECT
Late
Theodore
Harris
15 Aug 2024
5978898-0301
STATE OF UTAH

THE CHURCH OF JESUS CHRIST OF LATTER-DAY SAINTS

Orem YSA 3rd 10 Ward Building
Orem UT YSA 3rd Stake

Approx. 1700 West 575 South
Vineyard, Utah 84059

Owner #: 590-1876
Plan Series: 2024 10 Ward SC
County Parcel: 37-228-0001
BHD #: 2344
Date: 13 Aug 2024

Drawing Issue and Revision Schedule

#	Date	Description

Site Dimension Plan -South

C113

Printed: 8/19/2024 1:57:55 PM

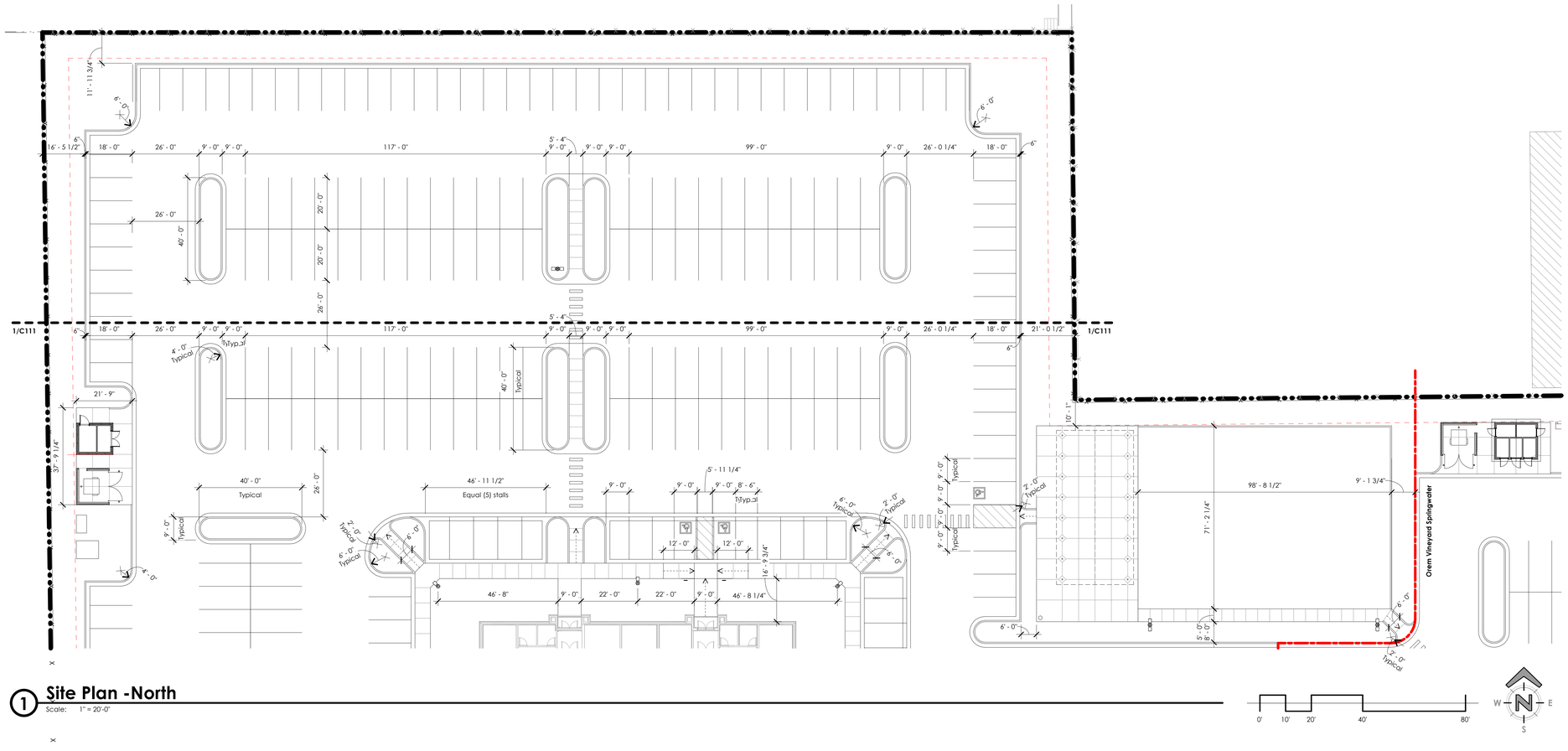

1 Site Plan -North

Scale: 1" = 20'-0"

bhd ARCHITECTS
www.bhdarchitects.com
Phone 801.571.0010
Fax 801.571.0303
Toll Free 888.571.0010
65 East Wadsworth Park Drive
Suite 205 Draper, Utah 84020

LICENSED ARCHITECT
Lafe Theodore Harris
15 Aug 2024
8978898-0301
STATE OF UTAH

THE CHURCH OF JESUS CHRIST OF LATTER-DAY SAINTS

Orem YSA 3rd 10 Ward Building
Orem UT YSA 3rd Stake

Approx. 1700 West 575 South
Vineyard, Utah 84059

Date: 15 Aug 2024
BHD #: 2344
County Parcel: 57-228-0001
Plan Series: 2024 10 Ward LSC
Owner #: 590-187x

Drawing Issue and Revision Schedule

#	Date	Description
1	15 Aug 2024	Bid Documents

Site Dimension Plan - North

C114

Printed: 8/19/2024 1:59:38 PM

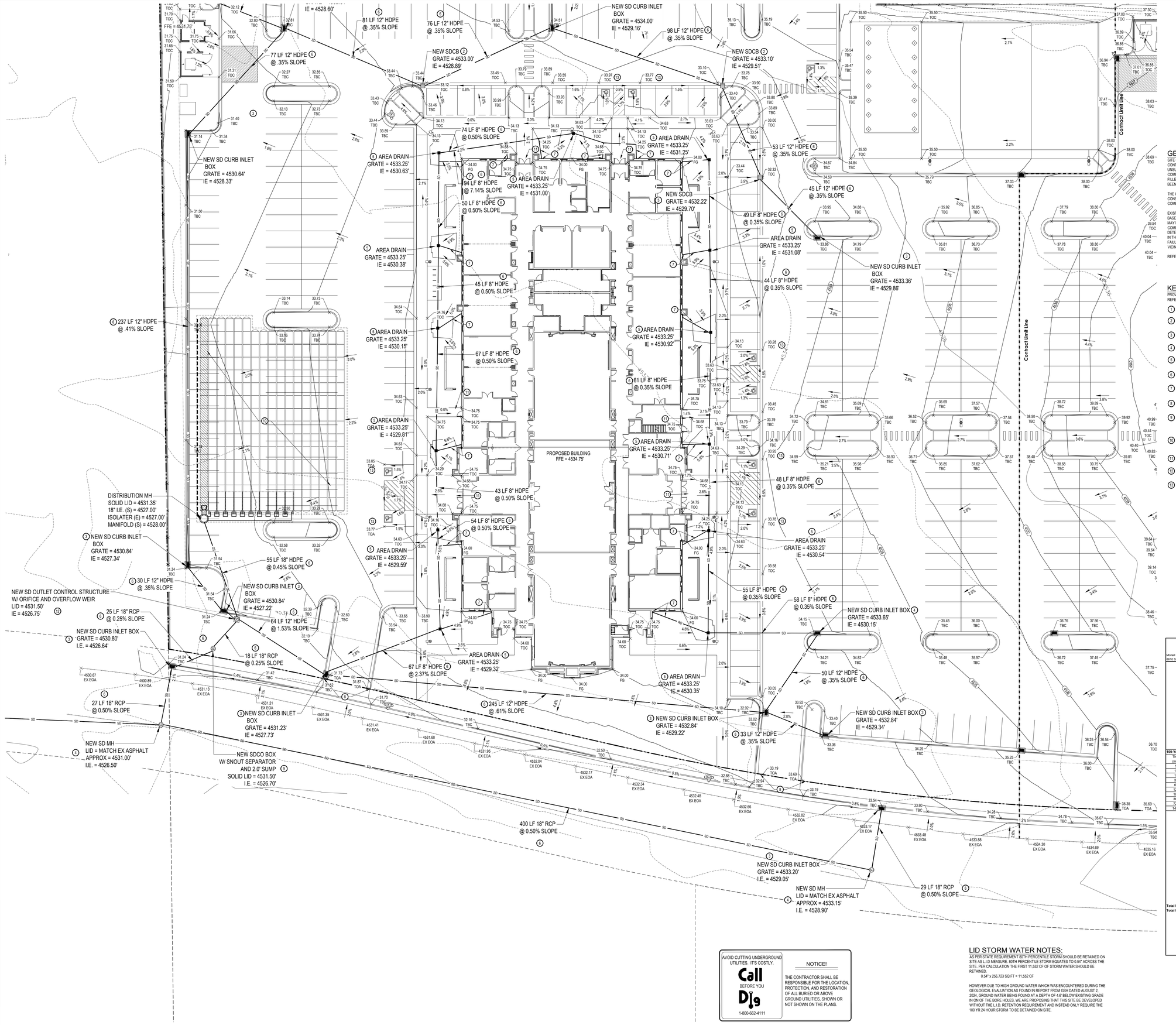

GENERAL NOTES:

SITE GRADING SHALL BE PERFORMED IN ACCORDANCE WITH THESE PLANS AND SPECIFICATIONS. THE CONTRACTOR SHALL BE RESPONSIBLE FOR REMOVING AND REPLACING ALL SOFT, YIELDING OR UNSUITABLE MATERIALS AND REPLACING WITH SUITABLE MATERIALS. CONTRACTOR SHALL SUBMIT A COMPACTION REPORT PREPARED BY A QUALIFIED REGISTERED SOILS ENGINEER, VERIFYING THAT ALL FILLED AREAS AND SUBGRADE AREAS WITHIN THE BUILDING PAD AREA AND AREAS TO BE PAVED, HAVE BEEN COMPACTED IN ACCORDANCE WITH THESE PLANS & SPECS.

THE CONTRACTOR IS TO USE BEST MANAGEMENT PRACTICES FOR PROVIDING EROSION CONTROL FOR CONSTRUCTION OF THIS PROJECT. SPECIFIC DETAILS SHOWN ON SHEET C171 SHALL BE USED IN COMBINATION WITH OTHER ACCEPTED LOCAL PRACTICES.

EXISTING UNDERGROUND UTILITIES AND IMPROVEMENTS ARE SHOWN IN THEIR APPROXIMATE LOCATIONS BASED UPON RECORD INFORMATION AVAILABLE AT THE TIME OF PREPARATION OF PLANS. LOCATIONS MAY NOT HAVE BEEN VERIFIED IN THE FIELD AND NO GUARANTEE IS MADE AS TO ACCURACY OR COMPLETENESS OF THE INFORMATION SHOWN. IT SHALL BE RESPONSIBILITY OF THE CONTRACTOR TO DETERMINE THE EXISTENCE AND LOCATION OF THOSE UTILITIES SHOWN ON THESE PLANS OR INDICATED IN THE FIELD BY LOCATING SERVICES. ANY ADDITIONAL COSTS INCURRED AS A RESULT OF CONTRACTOR'S FAILURE TO VERIFY LOCATIONS OF EXISTING UTILITIES PRIOR TO BEGINNING OF CONSTRUCTION IN THEIR VICINITY SHALL BE BORNE BY THE CONTRACTOR AND ASSUMED INCLUDED IN THE CONTRACT.

REFER TO OVER EXCAVATION AND FILL NOTES ON SHEET C111.

KEYED NOTES:

PROVIDE, INSTALL AND/OR CONSTRUCT THE FOLLOWING PER THE SPECIFICATIONS GIVEN OR REFERENCED AND THE DETAILS NOTED AND AS SHOWN ON THE CONSTRUCTION DRAWINGS:

1. GRADE SITE TO ELEVATIONS AND CONTOURS SHOWN ON PLAN.
2. 3' x 3' STORM DRAIN CATCH BASIN WITH HEAVY DUTY BICYCLE SAFE GRATE, PER STANDARD CHURCH DETAIL, SEE DETAIL 'A', SHEET CS21.
3. STORM DRAIN CURB INLET WITH HEAVY DUTY BICYCLE SAFE GRATE, PER STANDARD CHURCH DETAIL, SEE DETAIL 'M', SHEET CS21.
4. STORM DRAIN MANHOLE, WITH HEAVY DUTY SOLID LID.
5. 12" SQUARE SECURABLE NYLOPLAST YARD DRAIN, SEE ARCHITECTURAL SITE DETAIL SHEETS FOR DETAILS.
6. STORM DRAIN PIPE PER VINEYARD CITY STANDARDS. SEE PLAN FOR LENGTH, SIZE, TYPE AND SLOPE. TRENCHING PER STANDARD CHURCH DETAIL, SEE DETAIL 'F', SHEET CS31.
7. DOWNSPOUT DRAIN BASIN AND 6" HDPE PIPE FROM DOWNSPOUT BASIN. SLOPE AT 0.50% MINIMUM FROM BASIN, SEE ARCHITECTURAL SITE DETAIL SHEETS FOR DETAILS.
8. TAPER LAST 3' OF CURB TO MATCH SIDEWALK HEIGHT, PER STANDARD CHURCH DETAIL, SEE DETAIL '-', SHEET CS31.
9. STORM DRAIN CLEANOUT BOX WITH SNOUT OIL/WATER SEPARATOR, PER STANDARD CHURCH DETAIL, SEE DETAIL 'A', SHEET CS31.
10. STORMTECH SC-800 CHAMBERS OR EQUIVALENT SYSTEM APPROVED PRIOR TO BIDDING. SYSTEM TO OUTLET CONTROL STRUCTURE AS SHOWN ON PLANS ALL PROVIDED BY THE CONTRACTOR. STORMTECH CHAMBER HAS DETENTION CAPACITY OF 21.089 C.F. TOTAL REQUIRED STORAGE = 20,641 C.F. SEE DETAIL 'N', SHEET CS21. SHOP DRAWINGS PROVIDED BY MANUFACTURER PRIOR TO BIDDING AND CONSTRUCTION.
11. LANDING AREAS TO HAVE 2% MAXIMUM SLOPE AWAY FROM BUILDING
12. 4' x 4' OUTLET CONTROL STRUCTURE WITH ORIFICE AND OVERFLOW WEIR. SEE DETAIL 'AS', SHEET CS21 AND DETENTION CALCULATIONS. ORIFICE SIZE = 4.3" Ø
13. ADA PARKING STALL, TOA (TOP OF ASPHALT) SPOT GRADES ARE TO BE STAKED TO ENSURE SLOPE WITHIN ADA PARKING STALL REMAINS UNDER 2.0% MAX. SLOPE.

AVOID CUTTING UNDERGROUND UTILITIES. IT'S COSTLY.
Call BEFORE YOU Dig
1-800-662-4111

NOTICE!
THE CONTRACTOR SHALL BE RESPONSIBLE FOR THE LOCATION, PROTECTION, AND RESTORATION OF ALL BURIED OR ABOVE GROUND UTILITIES, SHOWN OR NOT SHOWN ON THE PLANS.

LID STORM WATER NOTES:

AS PER STATE REQUIREMENT 80TH PERCENTILE STORM SHOULD BE RETAINED ON SITE AS L.I.D MEASURE. 80TH PERCENTILE STORM EQUATES TO 0.54" ACROSS THE SITE. PER CALCULATION THE FIRST 11.552 CF OF STORM WATER SHOULD BE RETAINED.

0.54" x 256,723 SQ FT = 11,552 CF

HOWEVER DUE TO HIGH GROUND WATER WHICH WAS ENCOUNTERED DURING THE GEOLOGICAL EVALUATION AS FOUND IN REPORT FROM GSH DATED AUGUST 2, 2024, GROUND WATER BEING FOUND AT A DEPTH OF 4.6' BELOW EXISTING GRADE IN ON OF THE BORE HOLES, WE ARE PROPOSING THAT THIS SITE BE DEVELOPED WITHOUT THE L.I.D. RETENTION REQUIREMENT AND INSTEAD ONLY REQUIRE THE 100 YR 24 HOUR STORM TO BE DETAINED ON SITE.

Micheli Engineering
9810 S. Sandy Pkwy, Sandy, UT

STORM RUNOFF CALCULATION SHEET
Project No. 24010

Title :	Orem Vineyard YSA 3rd
Scope :	Site Drainage Design
	Detention Facilities
Engineer :	DJC
Authority :	Vineyard
Check:	DJC
Rev. No :	1

Design Philosophy:
The storm water runoff from the project site will sheet flow to a series of catch basins and inlet boxes where it will be collected and conveyed by an underground pipe system to underground detention storage chambers where the required runoff amount will be detained by means of a baffle wall causing the detained water to back up into the chambers while an orifice in the baffle wall sized per the calculations below will release water into the municipal storm drain system at a rate of 0.15 cfs/ac, as per the allowable rate.

Area Identification	(A)	Runoff Coefficient (C)		(C*A)
Paved	158,500 sf	(3.64 ac)	0.85	= 134,725 sf
Roof Area	33,150 sf	(0.76 ac)	0.90	= 29,835 sf
Landscaped	65,073 sf	(1.49 ac)	0.15	= 9,781 sf
Total	256,723 sf	(5.89 ac)	0.68 (ave)	174,321 sf

Allowable Discharge Rate = 0.15 cfs/ac

100-Year, 24-Hour Storm:			Allowable Peak Discharge = 0.88 cfs				
Time (min)	Rate (in/hr)	Rainfall (inches)	Q in (cfs)	Add'l Q in (cfs)	Total Q in (cfs)	Q out (cfs)	Storage (cf)
5	4.19	0.521	25.23	0.00	25.23	0.88	7,303
10	3.18	0.793	19.20	0.00	19.20	0.88	10,989
15	2.63	0.983	15.87	0.00	15.87	0.88	13,484
30	1.77	1.320	10.65	0.00	10.65	0.88	17,584
60	1.09	1.640	6.62	0.00	6.62	0.88	**20,641**
120	0.61	1.790	3.61	0.00	3.61	0.88	19,638
180	0.43	1.840	2.47	0.00	2.47	0.88	17,182
360	0.24	1.970	1.32	0.00	1.32	0.88	9,523
720	0.14	2.280	0.77	0.00	0.77	0	0
1440	0.08	2.600	0.44	0.00	0.44	0.44	0

Storm Pipe Detention Provided:

Pipe Size	Length (LF)	Unit Storage (CF/LF)	Storage
6 in. Pipe	0	0.196	0 cf
8 in. Pipe	0	0.349	0 cf
12 in. Pipe	0	0.785	0 cf
18 in. Pipe	0	1.767	0 cf
Total Pipe Storage			**0 cf**

Storm Structure Detention Provided:

Amount	Box Length	Box Width	Av. Depth	←	Storage
0	0	0	0		0 cf
Total Structure Storage					**0 cf**

Storage Provided:

Pond	Area(sf)	Depth (ft)	Volume (cu. ft.)
Storage chambers			21089 cf
Parking Area			0 cf
Total Surface Storage			**21089 cf**

Total Detention Provided :	**21,089 cf**
Total Detention Required :	**20,641 cf**

Orifice Design:
The orifice is designed upon the following data:

Total acreage of development:	5.89 acres	
Allowable discharge:	0.88 cfs (0.15 cfs/ac)	
Max head (center orifice to hw):	3.25 ft	
Diameter for new orifice:	**4.3 inch**	← $Q = C_d A \sqrt{2gh}$

bhd ARCHITECTS
www.bhdarchitects.com
Phone 801.571.0010
Fax 801.571.0303
Toll Free 888.571.0010
65 East Wadsworth Park Drive
Suite 205 Draper, Utah 84020

PROFESSIONAL ENGINEER
08-19-24
Reg. No. 14989225-2202
DANIEL J. CANNING
STATE OF UTAH

THE CHURCH OF JESUS CHRIST OF LATTER-DAY SAINTS

Orem YSA 3rd 10 Ward Building
Orem UT YSA 3rd Stake
Approx. 1700 West 575 South
Vineyard, Utah 84059

Owner #: 390-1876
Plan Series: 2024 10 Ward SC
County Parcel: 57:226:0001
BHD #: 2344
Date: 15 Aug 2024

Drawing Issue and Revision Schedule		
#	Date	Description
1	15 Aug 2024	Bid Documents

Grading and Drainage Plan

C121

Printed: 19 Aug 2024, 5:14 PM

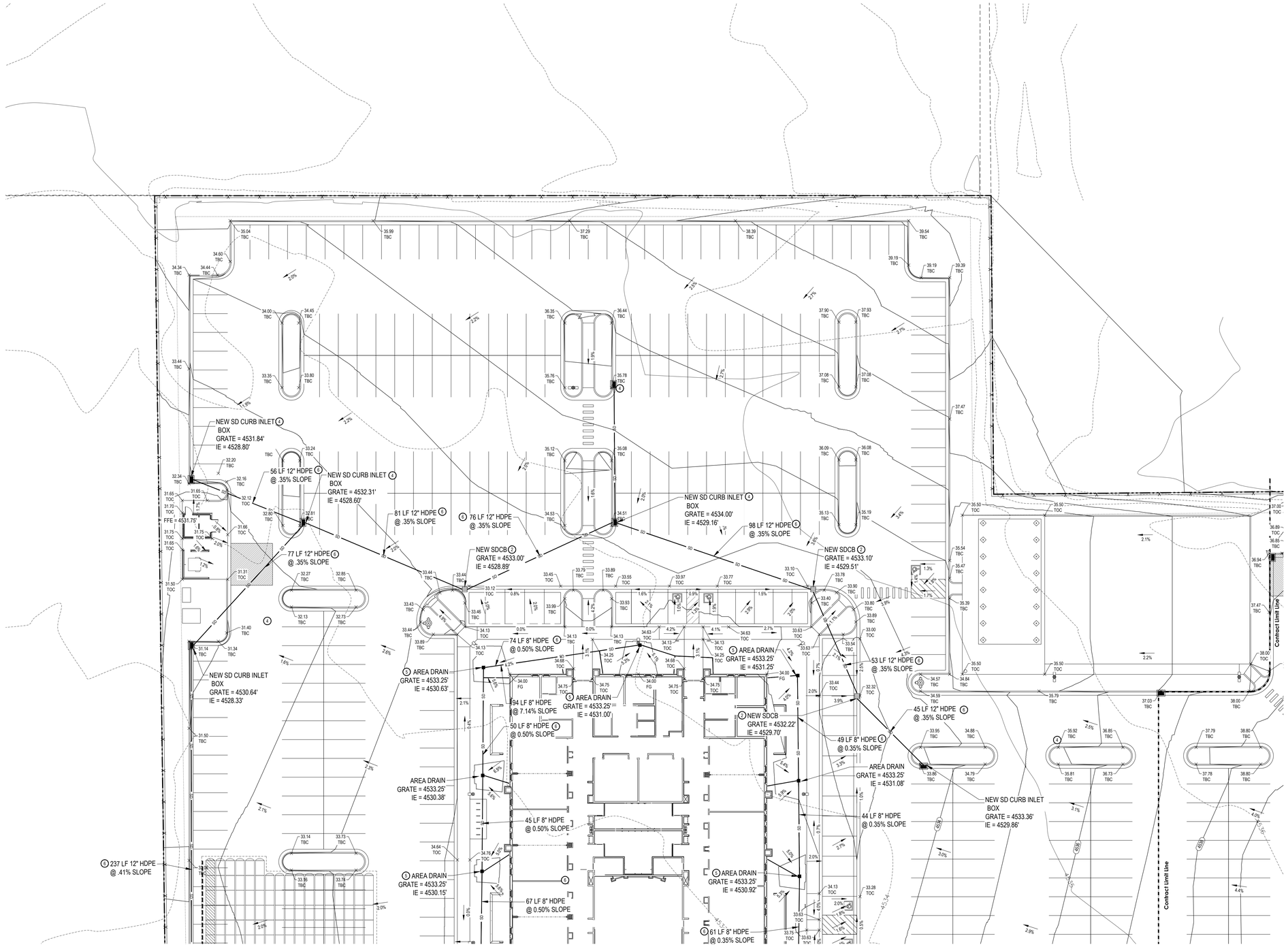

NORTH

SCALE: 1" = 20'

0 10' 20' 40' 60'

GENERAL NOTES:

SITE GRADING SHALL BE PERFORMED IN ACCORDANCE WITH THESE PLANS AND SPECIFICATIONS. THE CONTRACTOR SHALL BE RESPONSIBLE FOR REMOVING AND REPLACING ALL SOFT, YIELDING OR UNSUITABLE MATERIALS AND REPLACING WITH SUITABLE MATERIALS. CONTRACTOR SHALL SUBMIT A COMPACTION REPORT PREPARED BY A QUALIFIED REGISTERED SOILS ENGINEER, VERIFYING THAT ALL FILLED AREAS AND SUBGRADE AREAS WITHIN THE BUILDING PAD AREA AND AREAS TO BE PAVED, HAVE BEEN COMPACTED IN ACCORDANCE WITH THESE PLANS & SPECS.

THE CONTRACTOR IS TO USE BEST MANAGEMENT PRACTICES FOR PROVIDING EROSION CONTROL FOR CONSTRUCTION OF THIS PROJECT. SPECIFIC DETAILS SHOWN ON SHEET C171 SHALL BE USED IN COMBINATION WITH OTHER ACCEPTED LOCAL PRACTICES.

EXISTING UNDERGROUND UTILITIES AND IMPROVEMENTS ARE SHOWN IN THEIR APPROXIMATE LOCATIONS BASED UPON RECORD INFORMATION AVAILABLE AT THE TIME OF PREPARATION OF PLANS. LOCATIONS MAY NOT HAVE BEEN VERIFIED IN THE FIELD AND NO GUARANTEE IS MADE AS TO ACCURACY OR COMPLETENESS OF THE INFORMATION SHOWN. IT SHALL BE RESPONSIBILITY OF THE CONTRACTOR TO DETERMINE THE EXISTENCE AND LOCATION OF THOSE UTILITIES SHOWN ON THESE PLANS OR INDICATED IN THE FIELD BY LOCATING SERVICES. ANY ADDITIONAL COSTS INCURRED AS A RESULT OF CONTRACTOR'S FAILURE TO VERIFY LOCATIONS OF EXISTING UTILITIES PRIOR TO BEGINNING OF CONSTRUCTION IN THEIR VICINITY SHALL BE BORNE BY THE CONTRACTOR AND ASSUMED INCLUDED IN THE CONTRACT.

REFER TO OVER EXCAVATION AND FILL NOTES ON SHEET C111.

KEYED NOTES:

PROVIDE, INSTALL AND/OR CONSTRUCT THE FOLLOWING PER THE SPECIFICATIONS GIVEN OR REFERENCED AND THE DETAILS NOTED AND AS SHOWN ON THE CONSTRUCTION DRAWINGS:

1. GRADE SITE TO ELEVATIONS AND CONTOURS SHOWN ON PLAN.
2. 3' x 3' STORM DRAIN CATCH BASIN WITH HEAVY DUTY BICYCLE SAFE GRATE, PER STANDARD CHURCH DETAIL, SEE DETAIL 'H', SHEET C521.
3. STORM DRAIN CURB INLET WITH HEAVY DUTY BICYCLE SAFE GRATE, PER STANDARD CHURCH DETAIL, SEE DETAIL 'M', SHEET C521.
4. STORM DRAIN MANHOLE, WITH HEAVY DUTY SOLID LID.
5. 12" SQUARE SECURABLE NYLOPLAST YARD DRAIN, SEE ARCHITECTURAL SITE DETAIL SHEETS FOR DETAILS.
6. STORM DRAIN PIPE PER VINEYARD CITY STANDARDS. SEE PLAN FOR LENGTH, SIZE, TYPE AND SLOPE. TRENCHING PER STANDARD CHURCH DETAIL, SEE DETAIL 'F', SHEET C531.
7. DOWNSPOUT DRAIN BASIN AND 6" HDPE PIPE FROM DOWNSPOUT BASIN. SLOPE AT 0.50% MINIMUM FROM BASIN, SEE ARCHITECTURAL SITE DETAIL SHEETS FOR DETAILS.
8. TAPER LAST 3' OF CURB TO MATCH SIDEWALK HEIGHT, PER STANDARD CHURCH DETAIL, SEE DETAIL 'J', SHEET C531.
9. STORM DRAIN CLEANOUT BOX WITH SNOUT OIL/WATER SEPARATOR, PER STANDARD CHURCH DETAIL, SEE DETAIL 'A', SHEET C531.
10. STORMTECH SC-800 CHAMBERS OR EQUIVALENT SYSTEM APPROVED PRIOR TO BIDDING. SYSTEM TO OUTLET CONTROL STRUCTURE AS SHOWN ON PLANS ALL PROVIDED BY THE CONTRACTOR. STORMTECH CHAMBER HAS DETENTION CAPACITY OF 21,089 C.F. TOTAL REQUIRED STORAGE = 20,641 C.F. SEE DETAIL 'N', SHEET C521. SHOP DRAWINGS PROVIDED BY MANUFACTURER PRIOR TO BIDDING AND CONSTRUCTION.
11. LANDING AREAS TO HAVE 2% MAXIMUM SLOPE AWAY FROM BUILDING
12. 4' x 4' OUTLET CONTROL STRUCTURE WITH ORIFICE AND OVERFLOW WEIR. SEE DETAIL 'AS', SHEET C521 AND DETENTION CALCULATIONS. ORIFICE SIZE = 4.3" Ø
13. ADA PARKING STALL, TOA (TOP OF ASPHALT) SPOT GRADES ARE TO BE STAKED TO ENSURE SLOPE WITHIN ADA PARKING STALL REMAINS UNDER 2.0% MAX. SLOPE.

Monell Engineering
5810 S. Sandy Pkwy, Sandy, UT

STORM RUNOFF CALCULATION SHEET

Project No. 24510

Title :	Orem Vineyard YSA 3rd
Scope :	Site Drainage Design
	Detention Facilities
Engineer : DJC	Check: DJC
Authority : Vineyard	Rev. No. : 1

Design Philosophy:
The storm water runoff from the project site will sheet flow to a series of catch basins and inlet boxes where it will be collected and conveyed by an underground pipe system to underground detention storage chambers where the required runoff amount will be detained by means of a baffle wall causing the detained water to back up into the chambers while an orifice in the baffle wall sized per the calculations below will release water into the municipal storm drain system at a rate of 0.15 cfs/ac, as per the allowable rate.

Area Identification	(A)		Runoff Coefficient (C)		(C*A)
Paved	158,500 sf	(3.64 ac)	0.85	=	134,725 sf
Roof Area	33,150 sf	(0.76 ac)	0.90	=	29,835 sf
Landscaped	65,073 sf	(1.49 ac)	0.15	=	9,761 sf
Total	256,723 sf	(5.89 ac)	0.68 (ave)		174,321 sf

Allowable Discharge Rate = 0.15 cfs/ac

100-Year, 24-Hour Storm:		Allowable Peak Discharge = 0.88 cfs					
Time (min)	Rate (in/hr)	Rainfall (Inches)	Q in (cfs)	Add'l Q in (cfs)	Total Q in (cfs)	Q out (cfs)	Storage (cf)
5	4.19	0.521	25.23	0.00	25.23	0.88	7,303
10	3.18	0.793	19.20	0.00	19.20	0.88	10,989
15	2.63	0.983	15.87	0.00	15.87	0.88	13,484
30	1.77	1.320	10.65	0.00	10.65	0.88	17,584
60	1.09	1.640	6.62	0.00	6.62	0.88	**20,641**
120	0.61	1.790	3.61	0.00	3.61	0.88	19,638
180	0.43	1.840	2.47	0.00	2.47	0.88	17,182
360	0.24	1.970	1.32	0.00	1.32	0.88	9,523
720	0.14	2.280	0.77	0.00	0.77	0.77	0
1440	0.08	2.600	0.44	0.00	0.44	0.44	0

Storm Pipe Detention Provided:

Pipe Size	Length (LF)	Unit Storage (CF/LF)	Storage
6 in. Pipe	0	0.196	0 cf
8 in. Pipe	0	0.349	0 cf
12 in. Pipe	0	0.785	0 cf
18 in. Pipe	0	1.767	0 cf
Total Pipe Storage			**0 cf**

Storm Structure Detention Provided:

Amount	Box Length	Box Width	Av. Depth	←	Storage
0	0	0	0		0 cf
Total Structure Storage					**0 cf**

Storage Provided:

Pond	Area(sf)	Depth (ft)	Volume (cu. ft.)
Storage chambers			21089 cf
Parking Area			0 cf
Total Surface Storage			**21089 cf**

Total Detention Provided : 21,089 cf
Total Detention Required : 20,641 cf

Orifice Design:
The orifice is designed upon the following data:

Total acreage of development:	5.89	acres
Allowable discharge:	0.88	cfs (0.15 cfs/ac)
Max head (center orifice to hw):	3.25	ft
Diameter for new orifice:	**4.3**	**inch**

$$Q = C_d A_o \sqrt{2gh}$$

LID STORM WATER NOTES:

AS PER STATE REQUIREMENT 80TH PERCENTILE STORM SHOULD BE RETAINED ON SITE AS L.I.D MEASURE. 80TH PERCENTILE STORM EQUATES TO 0.54" ACROSS THE SITE. PER CALCULATION THE FIRST 11,552 CF OF STORM WATER SHOULD BE RETAINED.

0.54" x 256,723 SQ FT = 11,552 CF

HOWEVER DUE TO HIGH GROUND WATER WHICH WAS ENCOUNTERED DURING THE GEOLOGICAL EVALUATION AS FOUND IN REPORT FROM IGH DATED AUGUST 2, 2024, GROUND WATER BEING FOUND AT A DEPTH OF 4.6' BELOW EXISTING GRADE IN ON OF THE BORE HOLES, WE ARE PROPOSING THAT THIS SITE BE DEVELOPED WITHOUT THE L.I.D. RETENTION REQUIREMENT AND INSTEAD ONLY REQUIRE THE 100 YR 24 HOUR STORM TO BE RETAINED ON SITE.

AVOID CUTTING UNDERGROUND UTILITIES. IT'S COSTLY.
Call BEFORE YOU Dig
1-800-662-4111

NOTICE!
THE CONTRACTOR SHALL BE RESPONSIBLE FOR THE LOCATION, PROTECTION, AND RESTORATION OF ALL BURIED OR ABOVE GROUND UTILITIES, SHOWN OR NOT SHOWN ON THE PLANS.

bhd ARCHITECTS
www.bhdarchitects.com
Phone 801.571.0010
Fax 801.571.0303
Toll Free 888.571.0010
65 East Wadsworth Park Drive
Suite 205 Draper, Utah 84020

PROFESSIONAL ENGINEER
68-19-24
No. 10859225-2202
DANIEL J. CANNING
STATE OF UTAH

THE CHURCH OF JESUS CHRIST OF LATTER-DAY SAINTS

Orem YSA 3rd 10 Ward Building
Orem UT YSA 3rd Stake
Approx. 1700 West 575 South
Vineyard, Utah 84059

Owner #: 3901-1876
Plan Series: 2024 10 Wards S.C
County Parcel: 37-226-0001
BHD #: 2344
Date: 13 Aug 2024

Drawing Issue and Revision Schedule		
#	Date	Description
1	13 Aug 2024	BID Documents

Enlarged Exhibit Grading and Drainage Plan

C122

Printed: 19 Aug 2024 5:14 PM

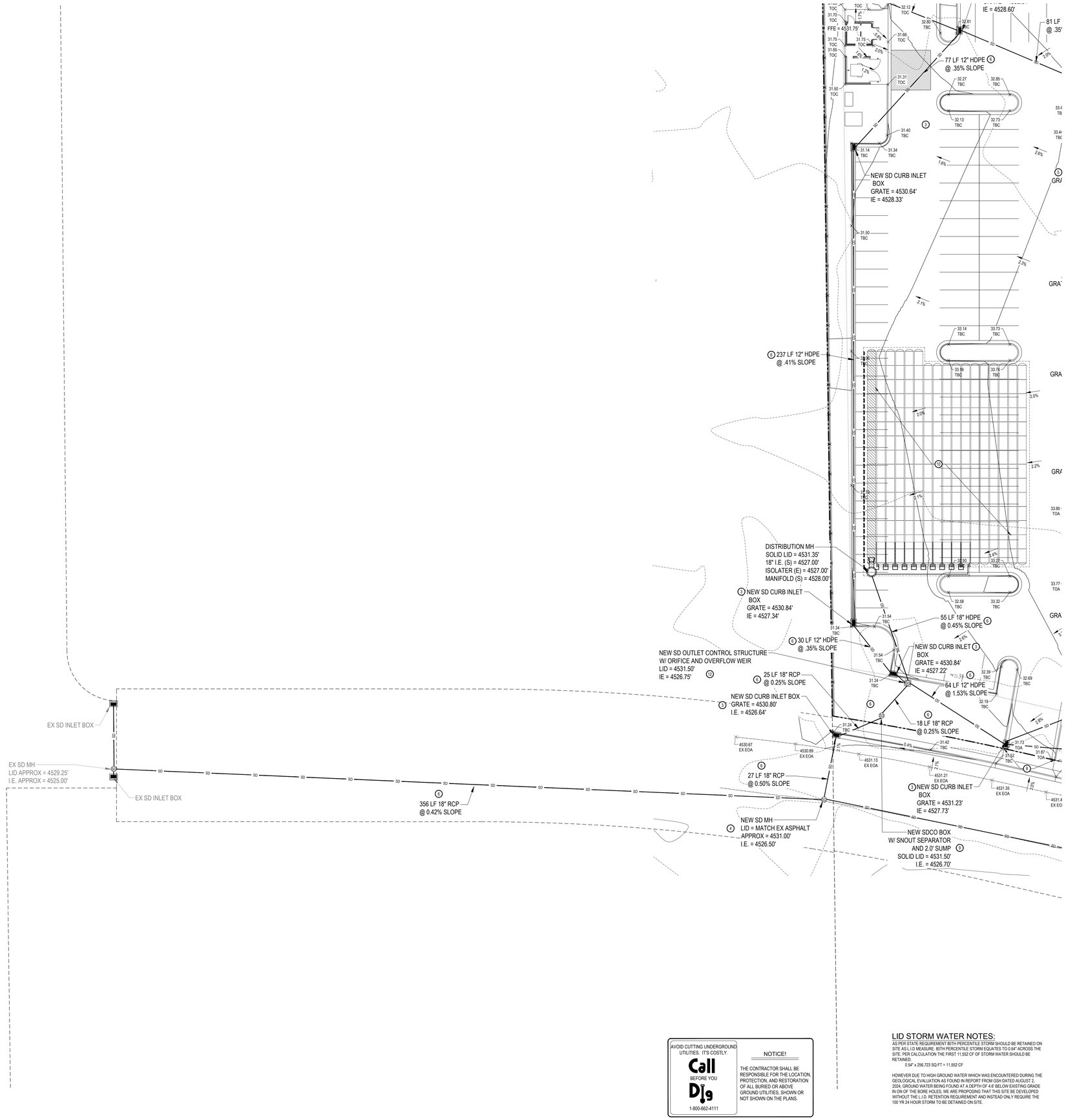

GENERAL NOTES:

SITE GRADING SHALL BE PERFORMED IN ACCORDANCE WITH THESE PLANS AND SPECIFICATIONS. THE CONTRACTOR SHALL BE RESPONSIBLE FOR REMOVING AND REPLACING ALL SOFT, YIELDING OR UNSUITABLE MATERIALS AND REPLACING WITH SUITABLE MATERIALS. CONTRACTOR SHALL SUBMIT A COMPACTION REPORT PREPARED BY A QUALIFIED REGISTERED SOILS ENGINEER, VERIFYING THAT ALL FILLED AREAS AND SUBGRADE AREAS WITHIN THE BUILDING PAD AREA AND AREAS TO BE PAVED, HAVE BEEN COMPACTED IN ACCORDANCE WITH THESE PLANS & SPECS.

THE CONTRACTOR IS TO USE BEST MANAGEMENT PRACTICES FOR PROVIDING EROSION CONTROL FOR CONSTRUCTION OF THIS PROJECT. SPECIFIC DETAILS SHOWN ON SHEET C171 SHALL BE USED IN COMBINATION WITH OTHER ACCEPTED LOCAL PRACTICES.

EXISTING UNDERGROUND UTILITIES AND IMPROVEMENTS ARE SHOWN IN THEIR APPROXIMATE LOCATIONS BASED UPON RECORD INFORMATION AVAILABLE AT THE TIME OF PREPARATION OF PLANS. LOCATIONS MAY NOT HAVE BEEN VERIFIED IN THE FIELD AND NO GUARANTEE IS MADE AS TO ACCURACY OR COMPLETENESS OF THE INFORMATION SHOWN. IT SHALL BE RESPONSIBILITY OF THE CONTRACTOR TO DETERMINE THE EXISTENCE AND LOCATION OF THOSE UTILITIES SHOWN ON THESE PLANS OR INDICATED IN THE FIELD BY LOCATING SERVICES. ANY ADDITIONAL COSTS INCURRED AS A RESULT OF CONTRACTOR'S FAILURE TO VERIFY LOCATIONS OF EXISTING UTILITIES PRIOR TO BEGINNING OF CONSTRUCTION IN THEIR VICINITY SHALL BE BORNE BY THE CONTRACTOR AND ASSUMED INCLUDED IN THE CONTRACT.

REFER TO OVER EXCAVATION AND FILL NOTES ON SHEET C111.

KEYED NOTES:

PROVIDE, INSTALL AND/OR CONSTRUCT THE FOLLOWING PER THE SPECIFICATIONS GIVEN OR REFERENCED AND THE DETAILS NOTED AND AS SHOWN ON THE CONSTRUCTION DRAWINGS:

1. GRADE SITE TO ELEVATIONS AND CONTOURS SHOWN ON PLAN.
2. 3' x 3' STORM DRAIN CATCH BASIN WITH HEAVY DUTY BICYCLE SAFE GRATE, PER STANDARD CHURCH DETAIL, SEE DETAIL 'F', SHEET CS21.
3. STORM DRAIN CURB INLET WITH HEAVY DUTY BICYCLE SAFE GRATE, PER STANDARD CHURCH DETAIL, SEE DETAIL 'M', SHEET CS21.
4. STORM DRAIN MANHOLE, WITH HEAVY DUTY SOLID LID.
5. 12" SQUARE SECURABLE NYLOPLAST YARD DRAIN, SEE ARCHITECTURAL SITE DETAIL SHEETS FOR DETAILS.
6. STORM DRAIN PIPE PER VINEYARD CITY STANDARDS. SEE PLAN FOR LENGTH, SIZE, TYPE AND SLOPE. TRENCHING PER STANDARD CHURCH DETAIL, SEE DETAIL 'F', SHEET CS31.
7. DOWNSPOUT DRAIN BASIN AND 6" HDPE PIPE FROM DOWNSPOUT BASIN. SLOPE AT 0.50% MINIMUM FROM BASIN, SEE ARCHITECTURAL SITE DETAIL SHEETS FOR DETAILS.
8. TAPER LAST 3' OF CURB TO MATCH SIDEWALK HEIGHT, PER STANDARD CHURCH DETAIL, SEE DETAIL 'J', SHEET CS31.
9. STORM DRAIN CLEANOUT BOX WITH SNOUT OIL/WATER SEPARATOR, PER STANDARD CHURCH DETAIL, SEE DETAIL 'A', SHEET CS31.
10. STORMTECH SC-800 CHAMBERS OR EQUIVALENT SYSTEM APPROVED PRIOR TO BIDDING. SYSTEM TO OUTLET CONTROL STRUCTURE AS SHOWN ON PLANS ALL PROVIDED BY THE CONTRACTOR. STORMTECH CHAMBER HAS DETENTION CAPACITY OF 21,089 C.F. TOTAL REQUIRED STORAGE = 20,641 C.F. SEE DETAIL 'N', SHEET CS21. SHOP DRAWINGS PROVIDED BY MANUFACTURER PRIOR TO BIDDING AND CONSTRUCTION.
11. LANDING AREAS TO HAVE 2% MAXIMUM SLOPE AWAY FROM BUILDING
12. 4' x 4' OUTLET CONTROL STRUCTURE WITH ORIFICE AND OVERFLOW WEIR. SEE DETAIL 'AS', SHEET CS21 AND DETENTION CALCULATIONS. ORIFICE SIZE = 4.3" Ø
13. ADA PARKING STALL, TOA (TOP OF ASPHALT) SPOT GRADES ARE TO BE STAKED TO ENSURE SLOPE WITHIN ADA PARKING STALL REMAINS UNDER 2.0% MAX. SLOPE.

AVOID CUTTING UNDERGROUND UTILITIES. IT'S COSTLY.
Call BEFORE YOU Dig
1-800-662-4111

NOTICE!
THE CONTRACTOR SHALL BE RESPONSIBLE FOR THE LOCATION, PROTECTION, AND RESTORATION OF ALL BURIED OR ABOVE GROUND UTILITIES, SHOWN OR NOT SHOWN ON THE PLANS.

LID STORM WATER NOTES:

AS PER STATE REQUIREMENT 80TH PERCENTILE STORM SHOULD BE RETAINED ON SITE AS L.I.D MEASURE. 80TH PERCENTILE STORM EQUATES TO 0.54" ACROSS THE SITE. PER CALCULATION THE FIRST 11,552 CF OF STORM WATER SHOULD BE RETAINED.
0.54" x 256,723 SQ FT = 11,552 CF

HOWEVER DUE TO HIGH GROUND WATER WHICH WAS ENCOUNTERED DURING THE GEOLOGICAL EVALUATION AS FOUND IN REPORT FROM GSH DATED AUGUST 2, 2024. GROUND WATER BEING FOUND AT A DEPTH OF 4.6' BELOW EXISTING GRADE IN ON OF THE BORE HOLES, WE ARE PROPOSING THAT THIS SITE BE DEVELOPED WITHOUT THE L.I.D. RETENTION REQUIREMENT AND INSTEAD ONLY REQUIRE THE 100 YR 24 HOUR STORM TO BE DETAINED ON SITE.

Monell Engineering
8610 S. Sandy Pkwy, Sandy, UT

STORM RUNOFF
CALCULATION SHEET
Project No. 24510

Title :	Orem Vineyard YSA 3rd
Scope :	Site Drainage Design
	Detention Facilities
Engineer : DJC	Check: DJC
Authority : Vineyard	Rev. No.: 1

Design Philosophy:
The storm water runoff from the project site will sheet flow to a series of catch basins and inlet boxes where it will be collected and conveyed by an underground pipe system to underground detention storage chambers where the required runoff amount will be detained by means of a baffle wall causing the detained water to back up into the chambers while an orifice in the baffle wall sized per the calculations below will release water into the municipal storm drain system at a rate of 0.15 cfs/ac, as per the allowable rate.

Area Identification	(A)		Runoff Coefficient (C)		(C*A)
Paved	158,500 sf	(3.64 ac)	0.85	=	134,725 sf
Roof Area	33,150 sf	(0.76 ac)	0.90	=	29,835 sf
Landscaped	65,073 sf	(1.49 ac)	0.15	=	9,761 sf
Total	256,723 sf	(5.89 ac)	0.68 (ave)		174,321 sf

Allowable Discharge Rate = 0.15 cfs/ac

100-Year, 24-Hour Storm: Allowable Peak Discharge = 0.88 cfs

Time (min)	Rate (in/hr)	Rainfall (Inches)	Q in (cfs)	Add'l Q in (cfs)	Total Q in (cfs)	Q out (cfs)	Storage (cf)
5	4.19	0.521	25.23	0.00	25.23	0.88	7,303
10	3.18	0.793	19.20	0.00	19.20	0.88	10,989
15	2.63	0.983	15.87	0.00	15.87	0.88	13,484
30	1.77	1.320	10.65	0.00	10.65	0.88	17,584
60	1.09	1.640	6.62	0.00	6.62	0.88	**20,641**
120	0.61	1.790	3.61	0.00	3.61	0.88	19,638
180	0.43	1.840	2.47	0.00	2.47	0.88	17,182
360	0.24	1.970	1.32	0.00	1.32	0.88	9,523
720	0.14	2.280	0.77	0.00	0.77	0.77	0
1440	0.08	2.600	0.44	0.00	0.44	0.44	0

Storm Pipe Detention Provided:

Pipe Size	Length (LF)	Unit Storage (CF/LF)	Storage
6 in. Pipe	0	0.196	0 cf
8 in. Pipe	0	0.349	0 cf
12 in. Pipe	0	0.785	0 cf
18 in. Pipe	0	1.767	0 cf
Total Pipe Storage			**0 cf**

Storm Structure Detention Provided:

Amount	Box Length	Box Width	Av. Depth	← Storage
0	0	0	0	0 cf
Total Structure Storage				**0 cf**

Storage Provided:

Pond	Area(sf)	Depth (ft)	Volume (cu. ft.)
Storage chambers			21089 cf
Parking Area			0 cf
Total Surface Storage			**21089 cf**

Total Detention Provided : 21,089 cf
Total Detention Required : 20,641 cf

Orifice Design:
The orifice is designed upon the following data:

Total acreage of development:	5.89	acres
Allowable discharge:	0.88	cfs (0.15 cfs/ac)
Max head (center orifice to hw):	3.25	ft
Diameter for new orifice:	**4.3**	**inch**

$$Q = C_d A_o \sqrt{2gh}$$

bhd ARCHITECTS
www.bhdarchitects.com
Phone 801.571.0010
Fax 801.571.0303
Toll Free 888.571.0010
65 East Wadsworth Park Drive
Suite 205 Draper, Utah 84020

PROFESSIONAL ENGINEER
08-19-24
REG. NO. 10999875-2202
DANIEL J. CANNING
STATE OF UTAH

THE CHURCH OF JESUS CHRIST OF LATTER-DAY SAINTS

Orem YSA 3rd 10 Ward Building
Orem UT YSA 3rd Stake

Approx. 1700 West 575 South
Vineyard, Utah 84059

Owner #: 370-187-6
Plan Series: 2024 10 Ward S/C
County Parcel: 37:226:0001
BHD #: 2344
Date: 13 Aug 2024

Drawing Issue and Revision Schedule		
#	Date	Description
1	13 Aug 2024	Bid Documents

Grading and Drainage Plan

C123

Printed: 19 Aug 2024 5:14 PM

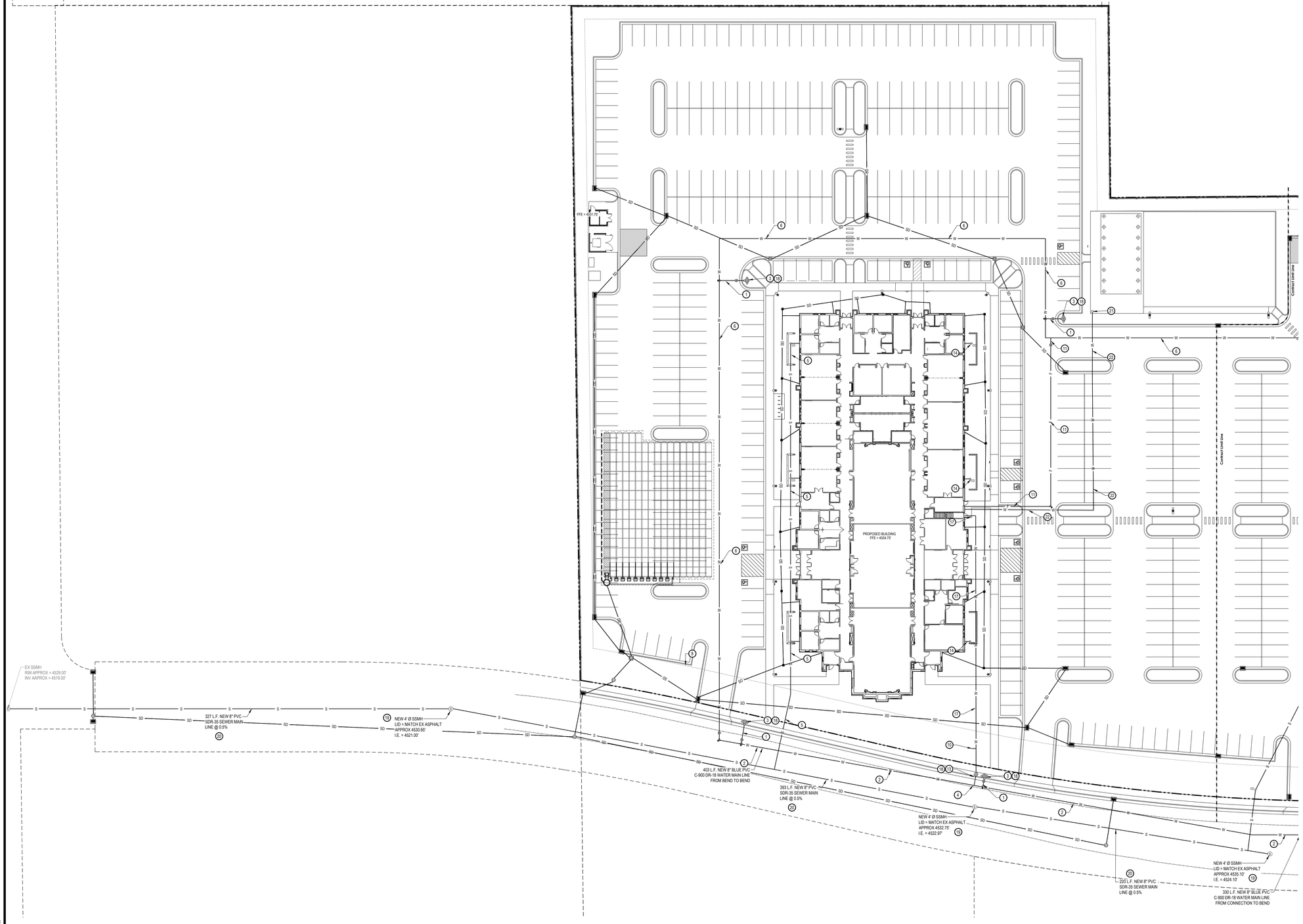

GENERAL NOTES:

CONTRACTOR IS TO COORDINATE ALL UTILITIES WITH MECHANICAL DRAWINGS.

ALL NEW WATER CONSTRUCTION TO BE DONE IN ACCORDANCE WITH LOCAL GOVERNING MUNICIPALITY STANDARDS & SPECIFICATIONS.

ALL NEW SANITARY SEWER CONSTRUCTION TO BE DONE IN ACCORDANCE WITH LOCAL GOVERNING MUNICIPALITY STANDARDS & SPECIFICATIONS.

CONTRACTOR SHALL FIELD VERIFY LOCATIONS AND INVERT ELEVATIONS OF EXISTING MANHOLES AND OTHER UTILITIES BEFORE STAKING OR CONSTRUCTING ANY SEWER LINES.

FOUR FEET OF COVER IS REQUIRED OVER ALL SEWER LINES.

MAINTAIN A MINIMUM OF 48 INCHES OF COVER ON ALL WATER LINES.

CONTRACTOR IS TO COORDINATE LOCATIONS OF NEW TELEPHONE SERVICE TO BUILDING WITH CENTURY LINK. A PVC CONDUIT, PLYWOOD BACKBOARD, AND GROUND WIRE IS REQUIRED FOR SERVICE THROUGH PROPERTY. COORDINATE SIZES AND LOCATION WITH CENTURY LINK.

CONTRACTOR IS TO SUBMIT SITE PLAN TO DOMINION ENERGY FOR DESIGN OF GAS LINE SERVICE TO BUILDING. CONTRACTOR TO COORDINATE WITH DOMINION ENERGY FOR CONTRACTOR LIMITS OF WORK VERSUS DOMINION ENERGY LIMITS.

LOCATION OF ALL UNDERGROUND UTILITIES SHOWN ARE APPROXIMATE LOCATIONS. CONTRACTOR IS TO VERIFY CONNECTION POINTS WITH EXISTING UTILITIES. CONTRACTOR IS RESPONSIBLE FOR ANY DAMAGE CAUSED TO EXISTING UTILITIES AND UTILITY STRUCTURE THAT ARE TO REMAIN.

UTILITY ALERT PHONE NUMBERS
- WATER: VINEYARD CITY
- SEWER: VINEYARD CITY
- NATURAL GAS: DOMINION ENERGY
- ELECTRICAL POWER: POWER PROVIDER
- TELEPHONE: CENTURY LINK

KEYED NOTES:

PROVIDE, INSTALL AND/OR CONSTRUCT THE FOLLOWING PER THE SPECIFICATIONS GIVEN OR REFERENCED AND THE DETAILS NOTED AND AS SHOWN ON THE CONSTRUCTION DRAWINGS:

1. NEW 6" PVC C-900 FIRE LINE FOR NEW FIRE HYDRANT PER VINEYARD TOWN STANDARDS AND SPECIFICATIONS, INCLUDING ALL FITTINGS AND THRUST BLOCKING. SEE VINEYARD TOWN DETAIL '13', SHEET C5.04 FOR TRENCHING AND DETAIL '18', SHEET C5.08 FOR THRUST BLOCKING.
2. 8" BLUE PVC C-900 DR-18 WATER LINE, INCLUDING ALL FITTINGS AND THRUST BLOCKING. SEE DETAIL 'CA', SHEET C5.03 FOR TRENCHING AND APWA PLAN NO. 561 FOR THRUST BLOCKING.
3. INSTALL NEW FIRE HYDRANT PER VINEYARD TOWN STANDARD DETAIL '17', SHEET C5.04.
4. CONNECT NEW 2" POLY PIPE WATER SERVICE LINE TO NEW MAIN LINE, PER VINEYARD TOWN STANDARDS AND SPECIFICATIONS.
5. 6" PVC SDR-35 SANITARY SEWER LATERAL @ 1.00% MINIMUM SLOPE, INCLUDING NEW CLEANOUTS PER VINEYARD TOWN STANDARDS AND SPECIFICATIONS. CONNECT TO NEW SEWER MAIN. LATERAL PER VINEYARD TOWN STANDARD DETAIL '20', SEE SHEET C5.04.
6. 8" BLUE PVC C-900 DR-18 FIRE LINE LOOP, INCLUDING ALL FITTINGS AND THRUST BLOCKING. SEE DETAIL 'CA', SHEET C5.03 FOR TRENCHING AND APWA PLAN NO. 561 FOR THRUST BLOCKING.
7. APPROXIMATE LOCATION OF NEW NATURAL GAS METER(S). CONTRACTOR TO COORDINATE SIZE, DESIGN AND INSTALLATION WITH DOMINION ENERGY AND WITH MECHANICAL PLANS.
8. UNDERGROUND CABLE AND POWER LINES. CONTRACTOR TO COORDINATE WITH COMCAST AND ROCKY MOUNTAIN POWER. SEE ELECTRICAL SITE PLAN FOR POWER CONNECTIONS.
9. TELEPHONE LINE. CONTRACTOR TO PROVIDE TRENCHING 30" DEEP X 24" WIDE FOR CENTURY LINK AND THEN BACKFILL AS REQUIRED. SEE ELECTRICAL SITE PLAN FOR COMMUNICATIONS CONNECTIONS.
10. INSTALL 1-1/2" STOP AND WASTE FOR IRRIGATION, CONNECT TO NEW 2" WATER LATERAL PER VINEYARD TOWN STANDARDS AND SPECIFICATIONS. SEE LANDSCAPE PLANS FOR DETAILS.
11. NEW 6" PVC C-900 FIRE SERVICE WATER LINE PER VINEYARD TOWN STANDARDS AND SPECIFICATIONS, INCLUDING ALL FITTINGS AND THRUST BLOCKING. SEE VINEYARD TOWN DETAIL '13', SHEET C5.04 FOR TRENCHING AND DETAIL '18', SHEET C5.04 FOR THRUST BLOCKING.
12. CONNECT NEW 8" BLUE PVC C-900 DR-18 WATER LINE TO EXISTING 8" WATER MAIN LINE, PER VINEYARD TOWN STANDARDS AND SPECIFICATIONS.
13. NEW 2" WATER METER PER VINEYARD TOWN STANDARDS.
14. SEWER CLEANOUT AND 6" PVC SEWER LINE FOR USE IN CLEARING SEWER LINES WITHIN THE BUILDING FROM OUTSIDE SEE STANDARD CHURCH DETAIL 'L' SHEET C521.
15. SIDEWALK AREA LIGHT POLE, SEE ELECTRICAL PLANS FOR DETAILS.
16. PARKING LOT AREA LIGHT POLE, SEE ELECTRICAL PLANS DETAILS.
17. 2" POLY PIPE WATER SERVICE LINE. PER VINEYARD TOWN STANDARD DETAIL '19', SEE SHEET C5.04.
18. ENSURE NO DEEP-ROOTED VEGETATION IS LOCATED WITHIN 10' OF FIRE HYDRANT OR WATER METER PER VINEYARD TOWN STANDARDS AND SPECIFICATIONS.
19. 4' DIAMETER SANITARY SEWER MANHOLE, PER APWA PLAN NO. 411.
20. 8" PVC SDR-35 SANITARY SEWER LINE, INCLUDING ALL FITTINGS. SEE APWA PLANS NO. 381 & 382 FOR TRENCHING.
21. INSTALL OWNER PROVIDED DRINKING FOUNTAIN PER MANUFACTURER'S REQUIREMENTS.
22. 3/4" POLY PIPE WATER LINE FROM PROPOSED BUILDING TO THE PAVILION DRINKING FOUNTAIN. SEE PLUMBING PLANS FOR COORDINATION AND FOR DETAILS.

AVOID CUTTING UNDERGROUND UTILITIES. IT'S COSTLY.
Call BEFORE YOU Dig
1-800-662-4111

NOTICE!
THE CONTRACTOR SHALL BE RESPONSIBLE FOR THE LOCATION, PROTECTION, AND RESTORATION OF ALL BURIED OR ABOVE GROUND UTILITIES, SHOWN OR NOT SHOWN ON THE PLANS.

bhd ARCHITECTS
www.bhdarchitects.com
Phone 801.571.0010
Fax 801.571.0303
Toll Free 888.571.0010
65 East Wadsworth Park Drive
Suite 205 Draper, Utah 84020

PROFESSIONAL ENGINEER
08-19-24
No. 11888925-2202
DANIEL J. CANNING
STATE OF UTAH

THE CHURCH OF JESUS CHRIST OF LATTER-DAY SAINTS

Orem YSA 3rd 10 Ward Building
Orem UT YSA 3rd Stake
Approx 1700 West 1375 South
Vineyard, Utah 84059

Owner #: 390-1876
Plan Series: 2024 10 Ward S.C.
County Parcel: 37-228-0001
BID #: 2344
Date: 15 Aug 2024

Drawing Issue and Revision Schedule

#	Date	Description
1	15 Aug 2024	Bid Documents

Site Utility Plan

C151

Plotted: 19 Aug 2024 5:14 PM

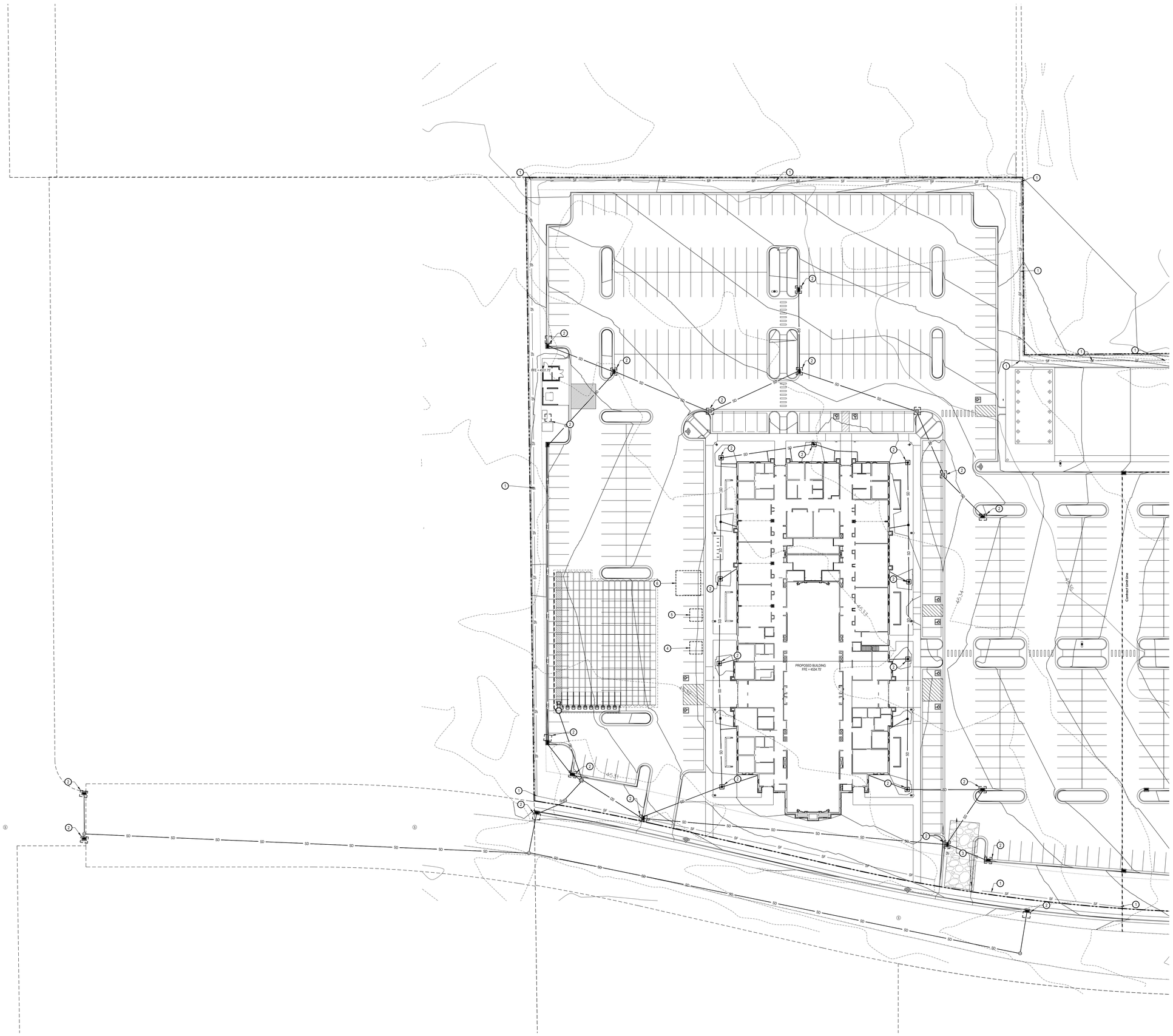

GENERAL NOTES:

THE CONTRACTOR IS TO USE BEST MANAGEMENT PRACTICES FOR PROVIDING EROSION CONTROL FOR CONSTRUCTION OF THIS PROJECT. SPECIFIC DETAILS SHOWN ON SHEET C5.04 SHALL BE USED IN COMBINATION WITH OTHER ACCEPTED LOCAL PRACTICES.

ALL MATERIALS AND WORKMANSHIP SHALL CONFORM TO THE LOCAL AGENCY'S EROSION CONTROL STANDARDS AND SPECIFICATIONS AND ALL WORK SHALL BE SUBJECT TO INSPECTION BY THE AGENCY HAVING JURISDICTION. ALSO INSPECTORS WILL HAVE THE RIGHT TO CHANGE THE FACILITIES AS NEEDED.

THE CONTRACTOR SHALL BE RESPONSIBLE FOR FIELD VERIFYING THE LOCATIONS OF ALL EXISTING UTILITIES. IF CONFLICTS OCCUR, THE CONTRACTOR SHALL NOTIFY THE ENGINEER PRIOR TO CONSTRUCTION TO DETERMINE IF ANY FIELD ADJUSTMENTS SHOULD BE MADE.

THE CONTRACTOR SHALL PROVIDE ADEQUATE DUST CONTROL.

WHEN GRADING OPERATIONS HAVE BEEN COMPLETED AND THE DISTURBED GROUND SHALL BE LEFT "OPEN" FOR 30 DAYS OR MORE THE AREA SHALL BE FURROWED PARALLEL TO THE CONTOURS OF THE AREA.

THE CONTRACTOR SHALL MODIFY EROSION CONTROL MEASURES TO ACCOMMODATE PROJECT PLANNING.

MAINTENANCE:

THE OWNER'S REPRESENTATIVE SHALL MAKE ROUTINE CHECKS ON ALL EROSION CONTROL MEASURES TO DETERMINE IF REPAIRS OR SEDIMENT REMOVAL IS NECESSARY. DUE TO CONDITIONS THAT MAY ARISE IN THE FIELD, ADDITIONAL CONTROL MAY BE DETERMINED TO BE NECESSARY.

SILT FENCE BARRIERS SHALL BE INSPECTED IMMEDIATELY AFTER EACH RAINFALL AND AT THE LEAST DAILY DURING PROLONGED RAINFALL.

CLOSE ATTENTION SHALL BE PAID TO THE REPAIR OF DAMAGED SILT FENCES, END RUNS, AND UNDEROUTTING BENEATH SILT FENCING.

NECESSARY REPAIRS TO BARRIERS OR REPLACEMENT OF SILT FENCING SHALL BE ACCOMPLISHED PROMPTLY.

SEDIMENT DEPOSITS SHOULD BE REMOVED AFTER EACH RAINFALL. THEY MUST BE REMOVED WHEN THE LEVEL OF DEPOSITION REACHES APPROXIMATELY ONE-HALF THE HEIGHT OF THE BARRIER.

KEYED NOTES:

PROVIDE, INSTALL AND/OR CONSTRUCT THE FOLLOWING PER THE SPECIFICATIONS GIVEN OR REFERENCED AND THE DETAILS NOTED AND AS SHOWN ON THE CONSTRUCTION DRAWINGS:

1. SILT FENCE AS SHOWN ON PLAN. SEE DETAIL 'C3', SHEET C5.03.
2. INLET PROTECTION AROUND EXISTING OR NEW STORM DRAIN CATCH BASINS OR CURB INLETS. SEE DETAIL 'A1', SHEET C5.03.
3. TEMPORARY CONSTRUCTION ENTRANCE. SEE DETAIL 'C1', SHEET C5.03. LOCATION SHOWN IS SUGGESTIVE. CONTRACTOR TO RELOCATE AS NEEDED.
4. CONCRETE WASHOUT AREA. SEE DETAIL 'A3', SHEET C5.03. LOCATION SHOWN IS SUGGESTIVE. CONTRACTOR TO RELOCATE AS NEEDED.
5. PORTABLE TOILET. SEE DETAIL 'C5', SHEET C5.03. LOCATION SHOWN IS SUGGESTIVE. CONTRACTOR TO RELOCATE AS NEEDED.
6. TOPSOIL STOCK PILE AREA. MAINTAIN SILT FENCE AROUND PERIMETER AT ALL TIMES. CONTROL DUST FROM PILE BY EITHER COVERING OR KEEPING MOIST. LOCATION SHOWN IS SUGGESTIVE. CONTRACTOR TO RELOCATE AS NEEDED.
7. NEW FILTER SOCK TO BE PLACED IN THE GUTTER ON THE DOWN STREAM END OF THE LOT TO PREVENT SEDIMENT FROM BEING TRANSPORTED INTO THE STORM DRAIN SYSTEM.

AVOID CUTTING UNDERGROUND UTILITIES. IT'S COSTLY.
Call BEFORE YOU Dig
1-800-662-4111

NOTICE!
THE CONTRACTOR SHALL BE RESPONSIBLE FOR THE LOCATION, PROTECTION, AND RESTORATION OF ALL BURIED OR ABOVE GROUND UTILITIES, SHOWN OR NOT SHOWN ON THE PLANS.

bhd ARCHITECTS
www.bhdarchitects.com
Phone 801.571.0010
Fax 801.571.0303
Toll Free 888.571.0010
65 East Wadsworth Park Drive
Suite 205 Draper, Utah 84020

PROFESSIONAL ENGINEER
08-19-24
REG. NO. 9599825-2202
DANIEL J. CANNING
STATE OF UTAH

THE CHURCH OF JESUS CHRIST OF LATTER-DAY SAINTS

Orem YSA 3rd 10 Ward Building
Orem UT YSA 3rd Stake
Approx. 1700 West 575 South
Vineyard, Utah 84059

Date: 15 Aug 2024
BHD #: 2344
County Parcel: 37:225:0001
Plan Series: 2024 10 Ward LSC
Owner #: 370-1816

Drawing Issue and Revision Schedule

#	Description	Date
1	Permit Documents	15 Aug 2024
2	Bid Documents	

Erosion Control Plan

C171

Printed: 19 Aug 2024 5:14 PM

NOTES

1. 1" prior to seeding, 2" prior to sodding, 4" in planting areas.
2. Expansion joint material shall be recessed 1/4" where sealant is not applied, and 1/2" where sealant is applied.
3. Epoxy-coated reinforcement steel bars shall be used for all concrete reinforcing used for all site concrete elements.

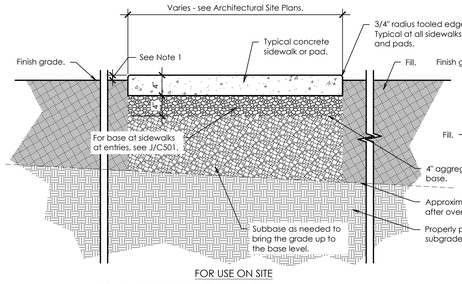

FOR USE ON SITE

A SIDEWALK DETAIL

Scale: 1" = 1'-0"

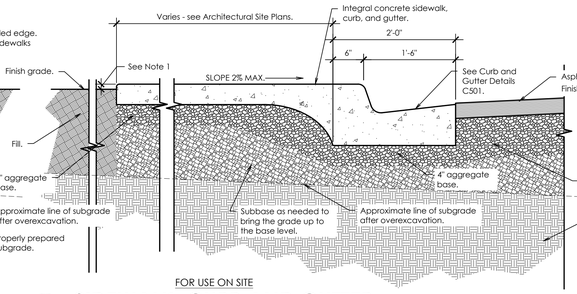

FOR USE ON SITE

B SIDEWALK, CURB AND GUTTER

Scale: 1" = 1'-0"

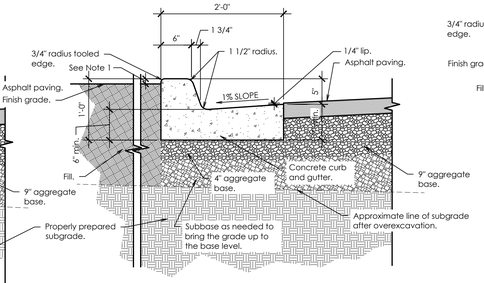

FOR USE ON SITE WHERE WATER DRAINS TOWARD CURB

C CURB AND GUTTER - IN FLOW

Scale: 1" = 1'-0"

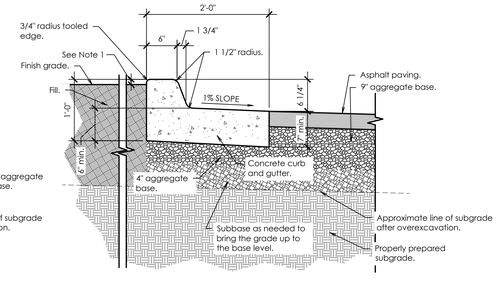

FOR USE ON SITE WHERE WATER DRAINS AWAY FROM CURB

D CURB AND GUTTER - OUT FLOW

Scale: 1" = 1'-0"

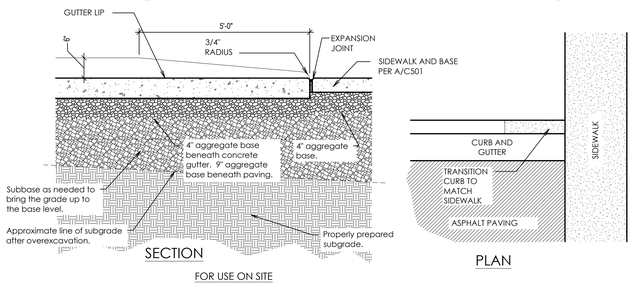

FOR USE ON SITE

E CURB TRANSITION

Scale: Not to Scale

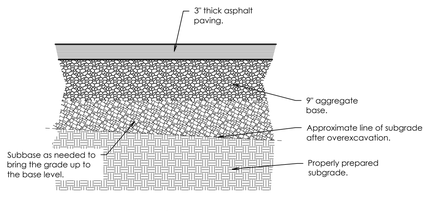

FOR USE ON SITE

F ASPHALT PAVING

Scale: 1" = 1'-0"

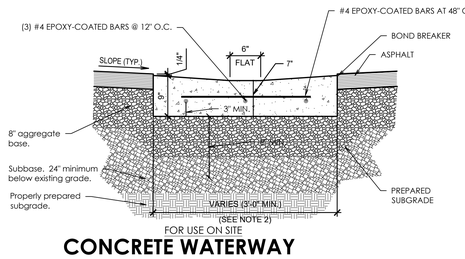

FOR USE ON SITE

G CONCRETE WATERWAY FLAT DRAINAGE STRUCTURE

Scale: 1" = 1'-0"

(FLAT DRAINAGE STRUCTURE)

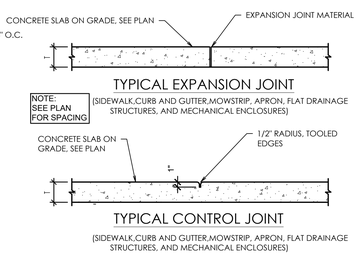

H EXPANSION AND CONTROL JOINTS

Scale: Not to Scale

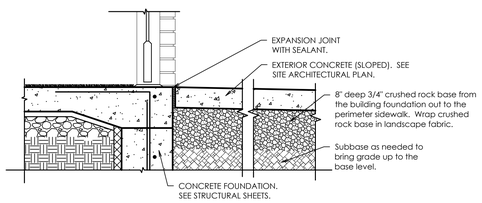

J TYPICAL ENTRY AT DOOR

Scale: 1" = 1'-0"

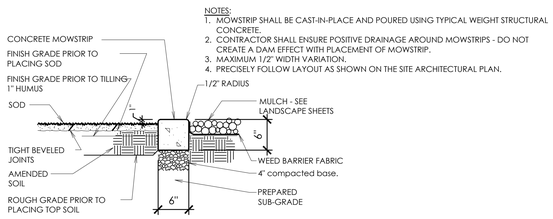

K CONCRETE MOW STRIP

Scale: 1" = 1'-0"

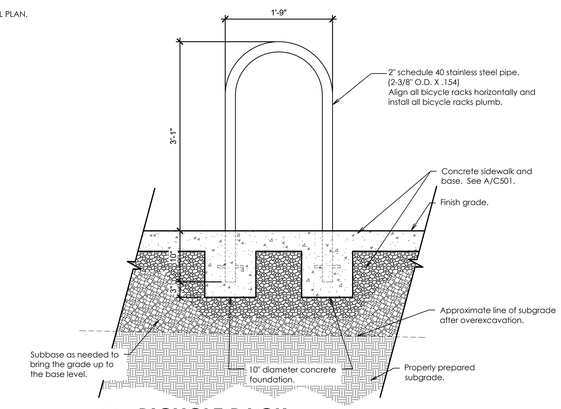

L BICYCLE RACK

Scale: 1" = 1'-0"

bhd ARCHITECTS
www.bhdarchitects.com
Phone 801.571.0010
Fax 801.571.0303
Toll Free 888.571.0010
65 East Wadsworth Park Drive
Suite 205 Draper, Utah 84020

LICENSED ARCHITECT Lafe Theodore Morris 15 Aug 2024 STATE OF UTAH

THE CHURCH OF JESUS CHRIST OF LATTER-DAY SAINTS

Orem YSA 3rd 10 Ward Building
Orem UT YSA 3rd Stake

Approx. 1700 West 575 South
Vineyard, Utah 84059

BHD #: 2344
Date: 15 Aug 2024
County Parcel: 57-226-0001
Plan Series: 2024 10 Ward SC
Owner #: 390-1876

Drawing Issue and Revision Schedule

#	Date	Description
1	15 Aug 2024	Bid Documents

Site Details

C501

Printed: 19 Aug 2024 2:10 PM

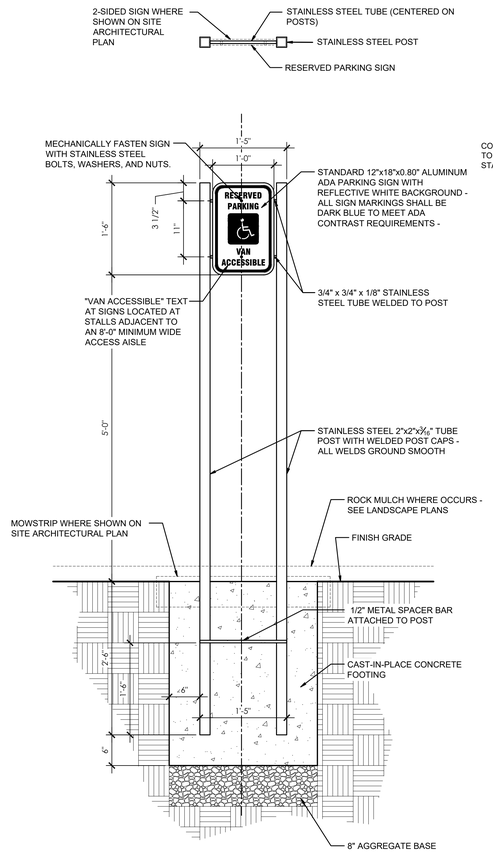

A ACCESSIBLE PARKING SIGN

Scale: 1" = 1'-0"

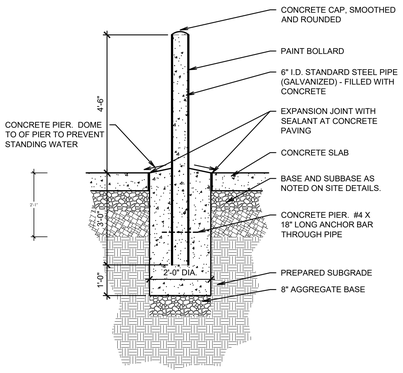

B BOLLARD DETAIL

Scale: 1/2" = 1'-0"

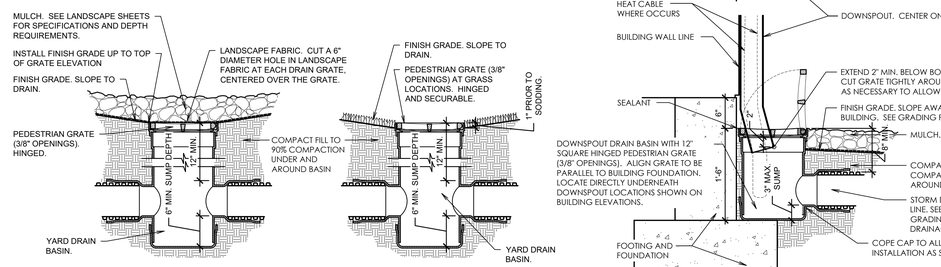

C DRAIN BASIN DETAIL

Scale: 1" = 1'-0"

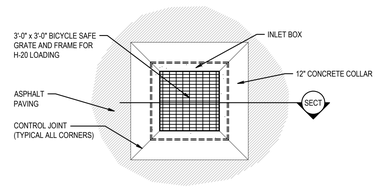

NOTES:
1. GRATE AND FRAMES SHALL BE HOT-DIPPED GALVANIZED.
2. DOWEL LAPS SHALL BE 24".
3. COAT ALL METAL PARTS WITH ASPHALTUM PAINT.

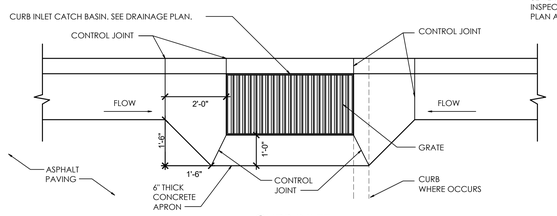

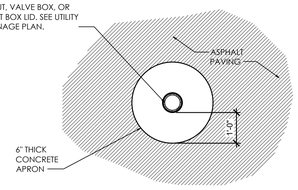

D CONCRETE COLLARS AND APRONS

Scale: NOT TO SCALE

NOTES:
1. UNLESS REQUIRED OTHERWISE BY THE AUTHORITY HAVING JURISDICTION, USE A LIGHT BROOM FINISH ON RAMPS AND LANDINGS TO MATCH THE FINISHES ON THE SIDEWALKS.
2. 5% (MAXIMUM) IN DIRECTION OF TRAVEL. LIMIT CROSS SLOPE ON SIDEWALKS 2%.
3. ALL LANDINGS MUST HAVE 1:48 CROSS SLOPE AND RUNNING SLOPE. LANDING MUST BE AS WIDE AS THE RAMP.
4. CROSS SLOPE ON RAMP MUST BE 1:48 OR LESS.
5. COUNTER SLOPES OF ADJOINING GUTTERS AND PAVING, ADJACENT TO THE CURB RAMP SHALL NOT BE STEEPER THAN 1:20 (5%).

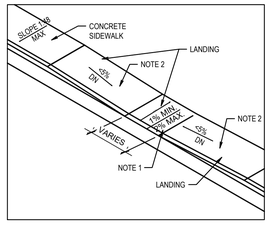

TYPE B

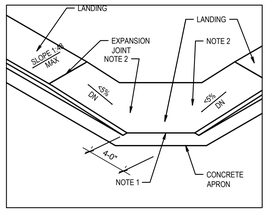

TYPE D

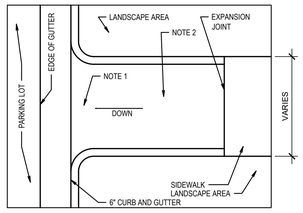

TYPE E

E ACCESSIBLE SLOPED SIDEWALKS

Scale: not to scale

bhd ARCHITECTS
www.bhdarchitects.com
Phone 801.571.0010
Fax 801.571.0303
Toll Free 888.571.0010
65 East Wadsworth Park Drive
Suite 205 Draper, Utah 84020

LICENSED ARCHITECT Late Theodore Harris 15 Aug 2024 7896498-0301 STATE OF UTAH

THE CHURCH OF JESUS CHRIST OF LATTER-DAY SAINTS

Orem YSA 3rd 10 Ward Building
Orem UT YSA 3rd Stake

Approx. 1700 West 575 South
Vineyard, Utah 84059

Owner #: 390-1876
Plan Series: 2024 10 Ward LSC
County Parcel: 57-226-0001
BHD #: 2344
Date: 15 Aug 2024

Drawing Issue and Revision Schedule

#	Date	Description
1	15 Aug 2024	Bid Documents

Site Details

C502

Printed: 19 Aug 2024 2:09 PM

NOTE
ALL STEEL COMPONENTS OF THE DUMPSTER ENCLOSURE GATE SHALL BE HOT-DIP GALVANIZED AND POWDER COATED.

NOTE
PROVIDE (3) SURFACE - MOUNTED MUSHROOM STOPS: 1 AT CLOSED POSITION, AND 1 FOR EACH GATE LEAF AT THE OPEN POSITION.

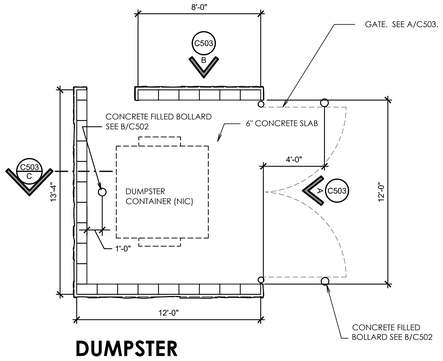

1 DUMPSTER ENCLOSURE PLAN
Scale: 1/4" = 1'-0"

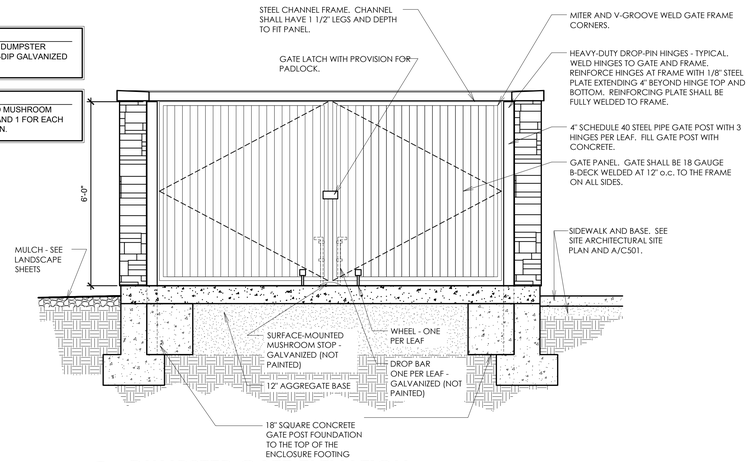

A DUMPSTER GATE ELEVATION
Scale: 1/2" = 1'-0"

NOTE:
STONE VENEER DETAILS AND COLOR SHALL MATCH MAIN BUILDING.

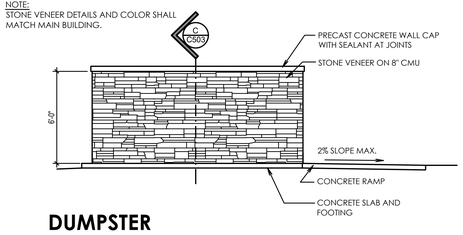

B DUMPSTER ENCLOSURE ELEVATION
Scale: 1/4" = 1'-0"

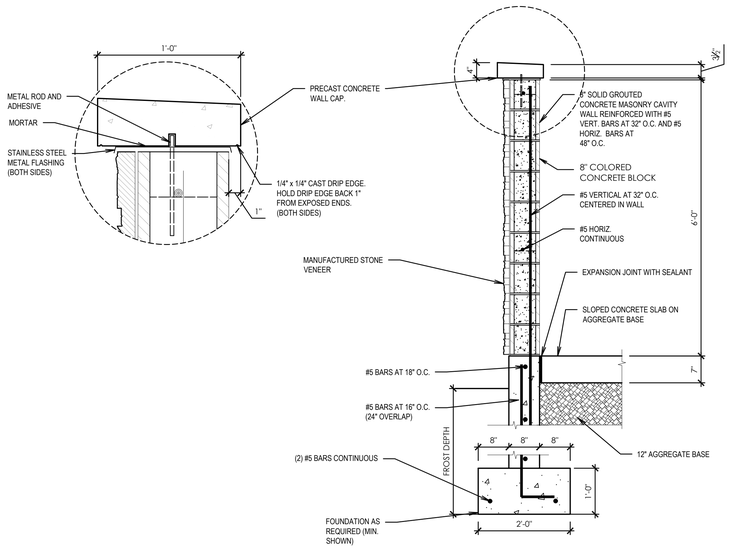

C DUMPSTER ENCLOSURE WALL SECTION
Scale: 3/4" = 1'-0"

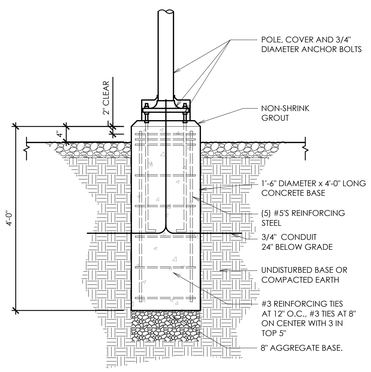

D POLE LIGHT BASE IN LANDSCAPING AREAS
Scale: 3/4" = 1'-0"

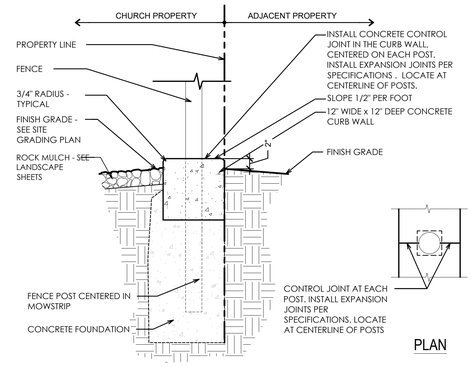

E FENCE AND MOWSTRIP DETAIL
Scale: 1" = 1'-0"

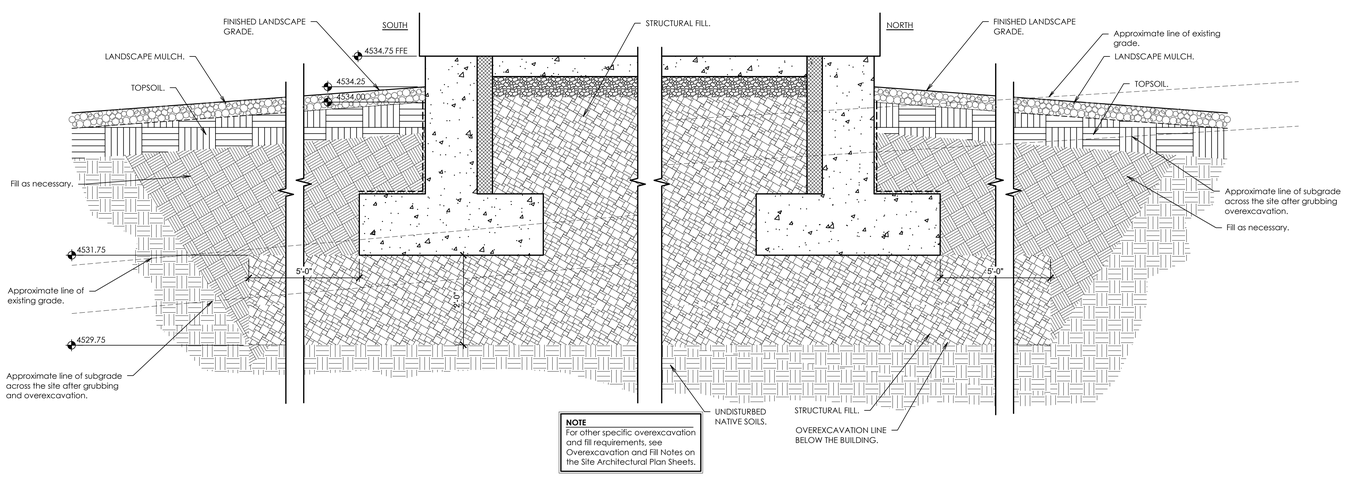

NOTE
For other specific overexcavation and fill requirements, see Overexcavation and Fill Notes on the Site Architectural Plan Sheets.

F OVEREXCAVATION DETAIL
Scale: 1" = 1'-0"

bhd ARCHITECTS
www.bhdarchitects.com
Phone 801.571.0010
Fax 801.571.0303
Toll Free 888.571.0010
65 East Wadsworth Park Drive
Suite 205 Draper, Utah 84020

LICENSED ARCHITECT
Lafe Theodore Adams
15 Aug 2024
7738898-0301
STATE OF UTAH

THE CHURCH OF JESUS CHRIST OF LATTER-DAY SAINTS

Orem YSA 3rd 10 Ward Building
Orem UT YSA 3rd Stake

Approx. 1700 West 575 South
Vineyard, Utah 84059

Owner #: 590-1872
Plan Series: 2024 10 Ward S/C
County Parcel: 37-228-0001
BID #: 2344
Date: 15 Aug 2024

Drawing Issue and Revision Schedule

#	Date	Description
1	15 Aug 2024	Bid Documents

Site Details

C503

Printed: 19 Aug 2024 2:06 PM

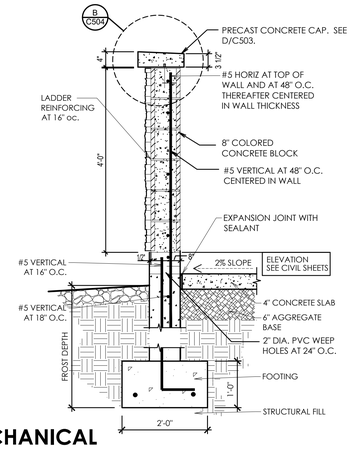

A MECHANICAL ENCLOSURE WALL SECTION

Scale: 3/4" = 1'-0"

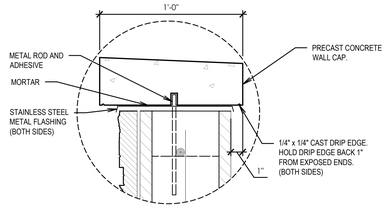

B MASONRY WALL CAP

Scale: NOT TO SCALE

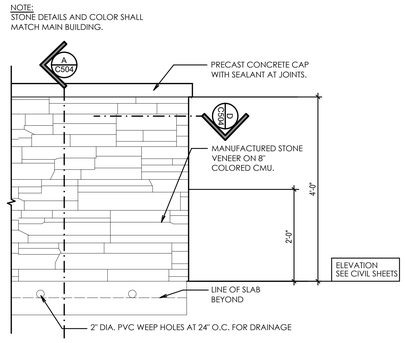

C MECHANICAL ENCLOSURE WALL ELEVATION

Scale: 3/4" = 1'-0"

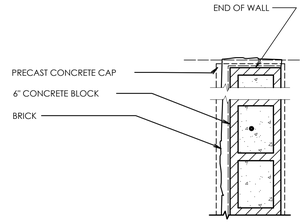

D MECHANICAL ENCLOSURE WALL PLAN

Scale: 3/4" = 1'-0"

bhd ARCHITECTS
www.bhdarchitects.com
Phone 801.571.0010
Fax 801.571.0303
Toll Free 888.571.0010
65 East Wadsworth Park Drive
Suite 205 Draper, Utah 84020

LICENSED ARCHITECT Lafe Theodore Harris 7855898-0301 STATE OF UTAH
15 Aug 2024

THE CHURCH OF JESUS CHRIST OF LATTER-DAY SAINTS

Orem YSA 3rd 10 Ward Building
Orem UT YSA 3rd Stake

Approx. 1700 West 575 South
Vineyard, Utah 84059

Date: 15 Aug 2024
BHD #: 2344
County Parcel: 39-228-0001
Plan Series: 2024 10 Ward IGC
Owner #: 590-18-76

Drawing Issue and Revision Schedule

#	Date	Description
1	15 Aug 2024	Bid Documents

Site Details

C504

Printed: 19 Aug 2024 2:08 PM

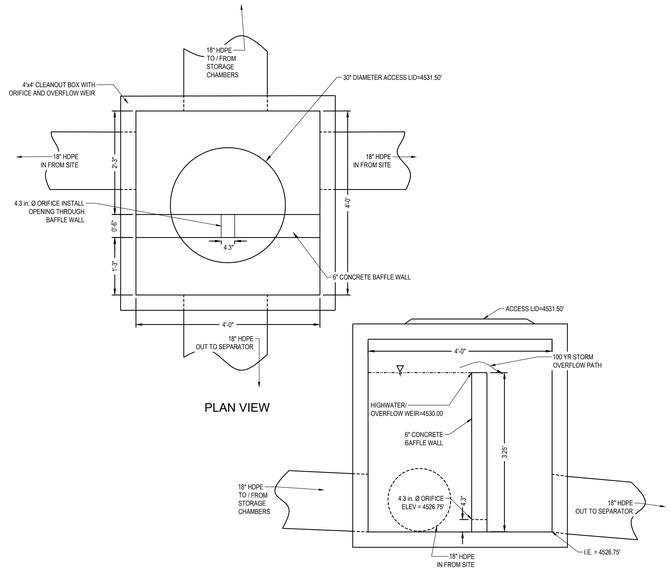

STORM DRAIN OUTLET CONTROL STRUCTURE WITH ORIFICE AND OVERFLOW WEIR

A SCALE: N.T.S.

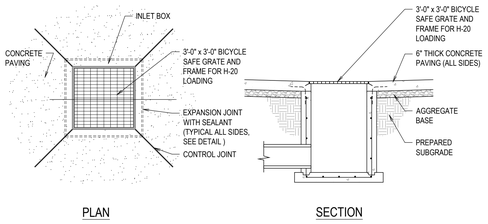

INLET BOX IN CONCRETE PAVING

H SCALE: N.T.S.

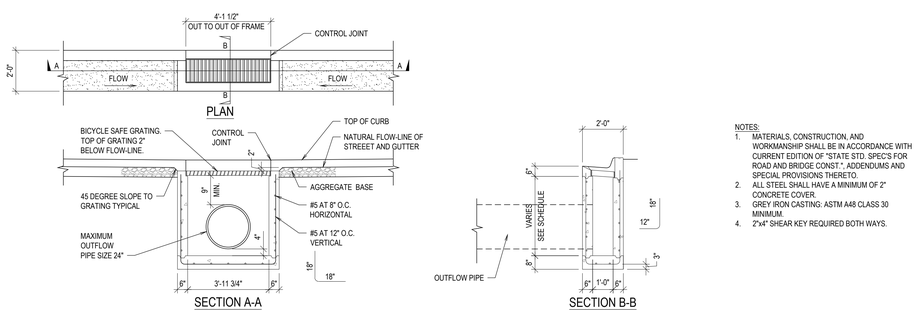

NOTES:
1. MATERIALS, CONSTRUCTION, AND WORKMANSHIP SHALL BE IN ACCORDANCE WITH CURRENT EDITION OF "STATE STD. SPEC'S FOR ROAD AND BRIDGE CONST.", ADDENDUMS AND SPECIAL PROVISIONS THERETO.
2. ALL STEEL SHALL HAVE A MINIMUM OF 2" CONCRETE COVER.
3. GREY IRON CASTING: ASTM A48 CLASS 30 MINIMUM.
4. 2"x4" SHEAR KEY REQUIRED BOTH WAYS.

SINGLE GUTTER INLET BOX

M SCALE: N.T.S.

ADS

User Inputs

Chamber Model:	SC-800
Outlet Control Structure:	Yes
Project Name:	Orem Vineyard YSA 3rd
Engineer:	Daniel Canning
Project Location:	Utah
Measurement Type:	Imperial
Required Storage Volume:	20641 cubic ft.
Stone Porosity:	40%
Stone Foundation Depth:	6 in.
Stone Above Chambers:	6 in.
Design Constraint Dimensions:	(85 ft. x 115 ft.)

Results

System Volume and Bed Size

Installed Storage Volume:	21089.80 cubic ft.
Storage Volume Per Chamber:	50.60 cubic ft.
Number Of Chambers Required:	244
Number Of End Caps Required:	34
Chamber Rows:	17
Maximum Length:	115.27 ft.
Maximum Width:	82.85 ft.
Approx. Bed Size Required:	9075.07 square ft.
Average Cover Over Chambers:	N/A .

System Components

Amount Of Stone Required:	799 cubic yards
Volume Of Excavation (Not Including Fill):	1261 cubic yards
Total Non-woven Geotextile Required:	2622 square yards
Woven Geotextile Required (excluding Isolator Row):	105 square yards
Woven Geotextile Required (Isolator Row):	73 square yards
Total Woven Geotextile Required:	177 square yards
Impervious Liner Required:	0 square yards

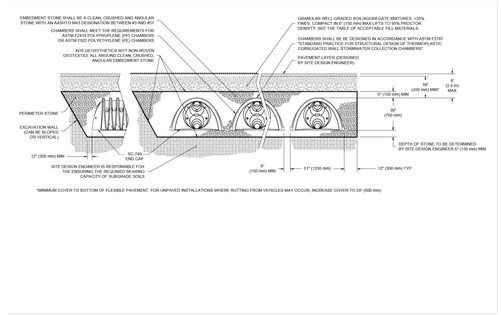

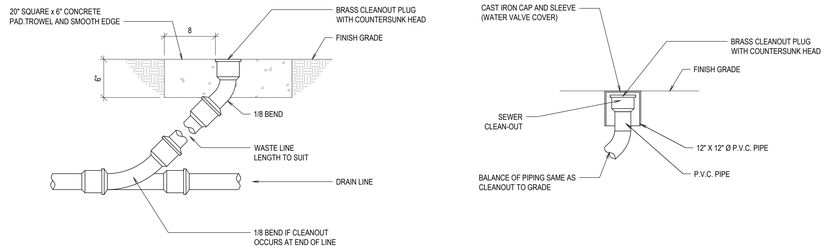

CLEAN-OUT TO GRADE (COTG) (CONCRETE & GRADE)

L SCALE: N.T.S.

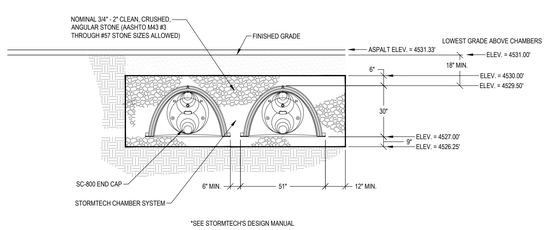

*SEE STORMTECH'S DESIGN MANUAL

STORMTECH CHAMBER SECTION DETAIL

N SCALE: N.T.S.

bhd ARCHITECTS
www.bhdarchitects.com
Phone 801.571.0010
Fax 801.571.0303
Toll Free 888.571.0010
65 East Wadsworth Park Drive
Suite 205 Draper, Utah 84020

PROFESSIONAL ENGINEER
08-19-24
No. 10899025-2202
DANIEL J. CANNING
STATE OF UTAH

THE CHURCH OF JESUS CHRIST OF LATTER-DAY SAINTS

Orem YSA 3rd 10 Ward Building
Orem UT YSA 3rd Stake

Approx. 1700 West 575 South
Vineyard, Utah 84059

Owner #: 390-1818
Plan Series: 2024 10 Ward S/C
County Parcel: 37:226:0301
BID #: 2344
Date: 13 Aug 2024

Drawing Issue and Revision Schedule

#	Title	Date
1	13 Aug 2024 Bid Documents	

Civil Details

C521

Printed: 19 Aug 2024 5:14 PM

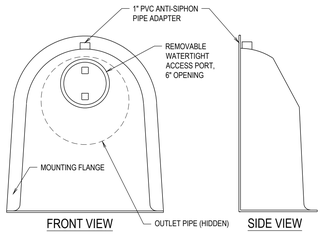

FRONT VIEW SIDE VIEW

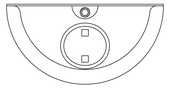

PLAN VIEW

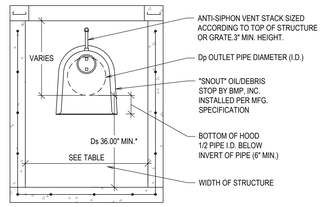

STRUCTURE DIMENSIONS — PLAN DIMENSIONS FOR A STRUCTURE SHOULD BE UP TO 7X AREA OF OUTLET PIPE FOR MAXIMUM POLLUTANT REMOVAL EFFICIENCY AND MINIMAL CLEANOUT FREQUENCY.
(SEE "MAINTENANCE CONSIDERATIONS" DOCUMENT FOR MORE INFORMATION)

SNOUT CONFIGURATION

SIZING EXAMPLES:

OUTLET HOLE SIZE	SNOUT SIZE	STRUCTURE SIZE
11.9" O.D. OR LESS	12 F or R	R FITS 36"-48" DIAM STRUCTURE
12.0"-17.9" O.D.	18 F or R	R FITS 48"-60" DIAM STRUCTURE
18.0"-23.9" O.D.	24 F or R	R FITS 48"-60" DIAM STRUCTURE
24.0"-29.9" O.D.	30 F or R	R FITS 60"-72" DIAM STRUCTURE
30.0"-47.9" O.D.	48 F	
30.0"-53.9" O.D.	54R/72	FITS 72" DIAM STRUCTURE ONLY
48.0"-95.9" O.D.	96 F	

NOTE: USE ONLY "F" SERIES SNOUTS FOR RECTANGULAR OR SQUARE STRUCTURES, AVAILABLE IN 12", 18", 24", 30", 48", AND 96" SIZES. USE ONLY "R" SERIES SNOUTS FOR ROUND STRUCTURES, AVAILABLE IN 12", 18", 24", 30", AND 54" SIZES.

SPECIFICATIONS:

1. ALL HOODS AND TRAPS FOR CATCH BASINS AND WATER QUALITY STRUCTURES SHALL BE AS MANUFACTURED BY:
   BEST MANAGEMENT PRODUCTS, INC.
   53 MT. ARCHER RD.
   LYME, CT 06371
   (860) 434-0277, (860) 434-3195 FAX
   TOLL FREE: (800) 504-8008 OR (888) 354-7585
   WEB SITE: www.bmpinc.com
   OR PRE-APPROVED EQUAL
2. ALL HOODS SHALL BE CONSTRUCTED OF A GLASS REINFORCED RESIN COMPOSITE WITH ISO GEL COAT EXTERIOR FINISH WITH A MINIMUM 0.125" LAMINATE THICKNESS.
3. ALL HOODS SHALL BE EQUIPPED WITH A WATERTIGHT ACCESS PORT, A MOUNTING FLANGE, AND AN ANTI-SIPHON VENT AS DRAWN. (SEE CONFIGURATION DETAIL)
4. THE SIZE AND POSITION OF THE HOOD SHALL BE DETERMINED BY OUTLET PIPE SIZE AS PER MANUFACTURER'S RECOMMENDATION.
5. THE BOTTOM OF THE HOOD SHALL EXTEND DOWNWARD A DISTANCE EQUAL TO 1/2 THE OUTLET PIPE DIAMETER WITH A MINIMUM DISTANCE OF 6" FOR PIPES <12" I.D.
6. THE ANTI-SIPHON VENT SHALL EXTEND ABOVE HOOD BY MINIMUM OF 3" AND A MAXIMUM OF 24" ACCORDING TO STRUCTURE CONFIGURATION.
7. THE SURFACE OF THE STRUCTURE WHERE THE HOOD IS MOUNTED SHALL BE FINISHED
   SMOOTH AND FREE OF LOOSE MATERIAL.
8. THE HOOD SHALL BE SECURELY ATTACHED TO STRUCTURE WALL WITH 3/8" STAINLESS STEEL BOLTS AND OIL-RESISTANT GASKET AS SUPPLIED BY MANUFACTURER. (SEE INSTALLATION DETAIL)
9. INSTALLATION INSTRUCTIONS SHALL BE FURNISHED WITH MANUFACTURER SUPPLIED INSTALLATION KIT.
   INSTALLATION KIT SHALL INCLUDE:
   A. INSTALLATION INSTRUCTIONS
   B. PVC ANTI-SIPHON VENT PIPE AND ADAPTER
   C. OIL-RESISTANT CRUSHED CELL FOAM GASKET WITH PSA BACKING
   D. 3/8" STAINLESS STEEL BOLTS
   E. ANCHOR SHIELDS

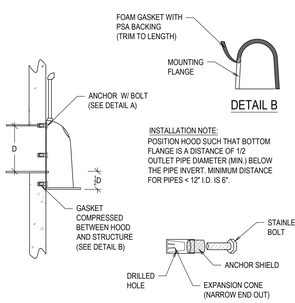

INSTALLATION NOTE:
POSITION HOOD SUCH THAT BOTTOM FLANGE IS A DISTANCE OF 1/2 OUTLET PIPE DIAMETER (MIN.) BELOW THE PIPE INVERT. MINIMUM DISTANCE FOR PIPES < 12" I.D. IS 6".

DETAIL A

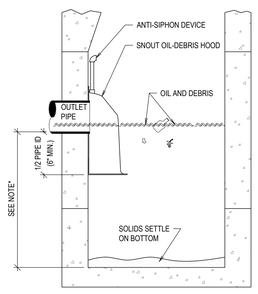

NOTE:
SUMP DEPTH OF 36" MIN. FOR < OR= 12" DIA. OUTLET.
FOR OUTLETS >OR= 15", DEPTH = 2.5 TO 3 X's DIAM.

TYPICAL INSTALLATION

US Patent # 6126817

HOOD SPECIFICATION FOR CATCH BASINS AND WATER QUALITY STRUCTURES		
DESCRIPTION	DATE	SCALE
OIL- DEBRIS HOOD SPECIFICATION AND INSTALLATION (TYPICAL)	09/08/00	NONE
	DRAWING NUMBER	
	SP-SN	

A SNOUT OIL-WATER DEBRIS SEPARATOR

SCALE: N.T.S.

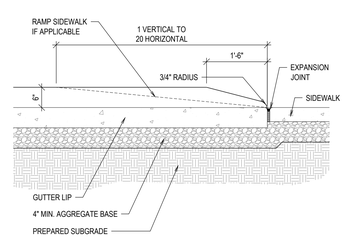

SECTION

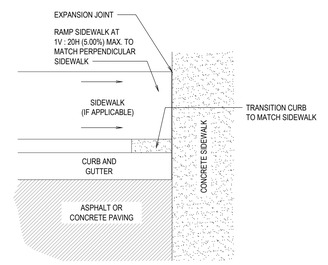

PLAN

J CURB TRANSITION

SCALE: N.T.S.

bhd ARCHITECTS
www.bhdarchitects.com
Phone 801.571.0010
Fax 801.571.0303
Toll Free 888.571.0010
65 East Wadsworth Park Drive
Suite 205 Draper, Utah 84020

PROFESSIONAL ENGINEER
08-19-24
No. 14888925-2202
DANIEL J. CANNING
STATE OF UTAH

THE CHURCH OF JESUS CHRIST OF LATTER-DAY SAINTS

Orem YSA 3rd 10 Ward Building
Orem UT YSA 3rd Stake
Approx. 1700 West 575 South
Vineyard, Utah 84059

Owner #: 570-1876
Plan Series: 2024 10 Ward S.C.
County Parcel: 37-226-0001
BHD #: 2344
Date: 19 Aug 2024

Drawing Issue and Revision Schedule		
#	Date	Description
1	19 Aug 2024	Bid Documents

Civil Details

C531

Plotted: 19 Aug 2024 5:14 PM

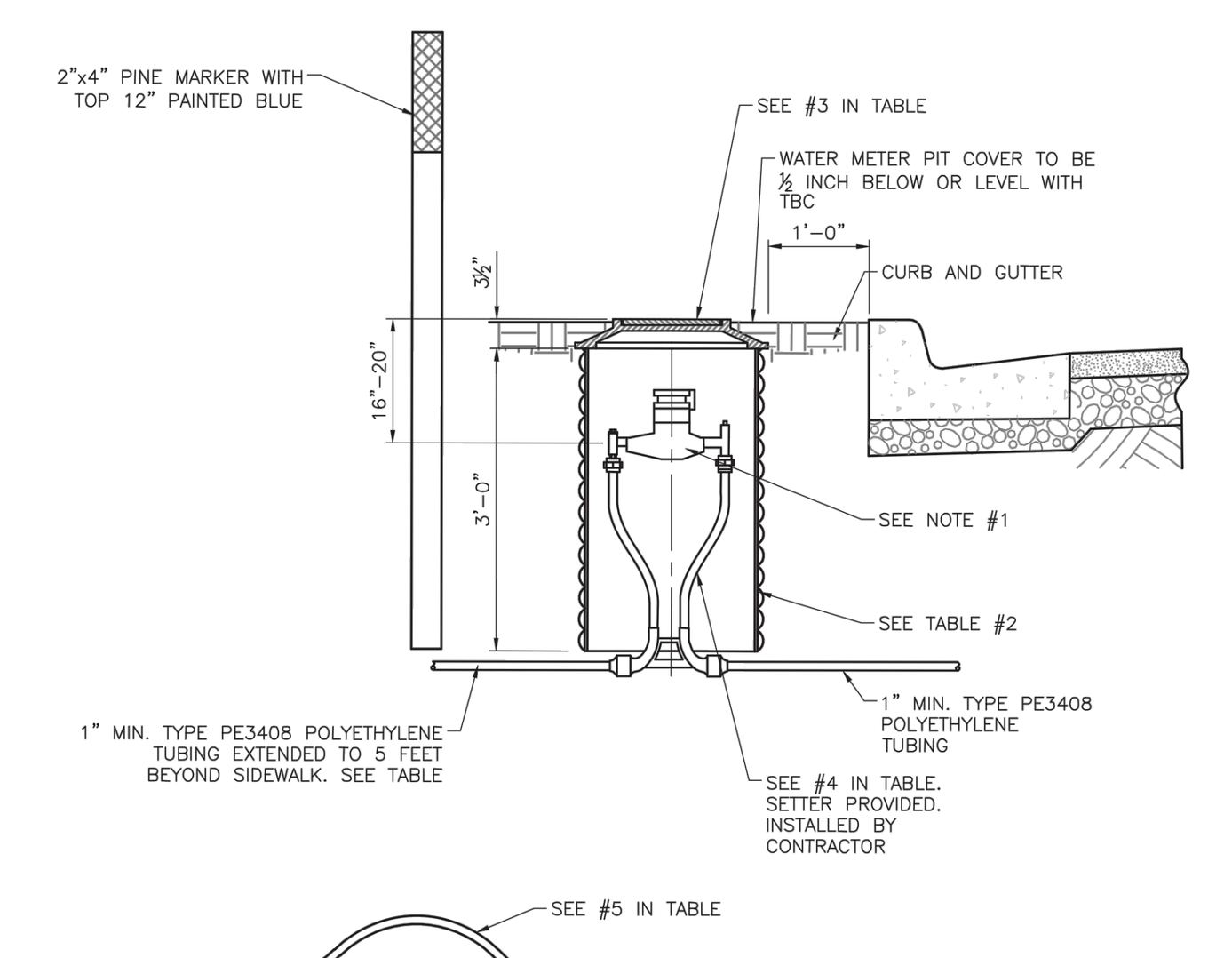

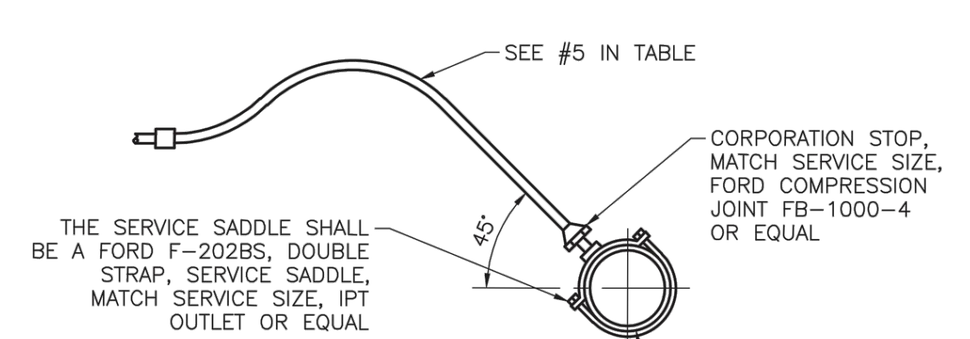

TAP ON PVC PIPE

NOTES:
1. ¾" – 1" METERS PROVIDED AND INSTALLED BY CITY.
   1½" – 2" METERS PROVIDED BY CITY, INSTALLED BY CONTRACTOR.
2. WATER SERVICE TO BE LOCATED PER APPROVED UTILITY PLAN.
3. ALL CONNECTIONS SHALL BE MADE USING PACK JOINTS (COMPRESSION) TYPE FITTINGS WITH INSERTS.
4. NO. 14 GAUGE COPPER TRACER WIRE REQUIRED, ATTACHED TO WIRE AT MAIN AND EXTENDED INTO METER BOX.
5. WATER METER TO BE LOCATED 2' MIN. FROM DRIVEWAYS.

TABLE

	1	2	3	4	5
METER SIZE	BADGER METER MODEL	METER BOX SIZE, ADS/HDPE WHITE	LID D&L FOUNDRY 2" HOLE *	FORD COPPERSETTERS PART # *	
¾"	M-25	21" x 36"	L-2244	VBHC7318W4444QNL	1" POLY
1"	M-70	21" x 36"	L-2244	VBHC7418W4444QNL	1" POLY
1½"	M-120	30" DIA. x 30" DEEP	B-5076 w/ PICK HOLE	VBH76181166NL	1½" POLY
2"	M-170	30" DIA. x 30" DEEP	B-5076 w/ PICK HOLE	VBH77181177NL	2" POLY

* OR EQUIVALENT UPON APPROVAL BY TOWN/CITY

JUB

STATEMENT OF USE
THIS DOCUMENT AND ANY ILLUSTRATIONS HEREON ARE PROVIDED AS STANDARD CONSTRUCTION DETAILS WITHIN THE TOWN OF VINEYARD. DEVIATION FROM THIS DOCUMENT REQUIRES APPROVAL FROM THE TOWN OF VINEYARD. THE TOWN OF VINEYARD CORPORATION CAN NOT BE HELD LIABLE FOR MISUSE OR CHANGES REGARDING THIS DOCUMENT.

REVISION: 1 STANDARDS UPDATE — JMM — DEO — 8/08/16

VINEYARD STAY CONNECTED

TYPICAL CULINARY WATER CONNECTION
TOWN OF VINEYARD
STANDARD DRAWING NUMBER: 19
CAD DWG: V_STD_DWGS; PLOT SCALE: 1.000; DRAWN BY: JMM; DESIGN BY: CRW; CHECKED BY: DEO; ADOPTED DATE: SEPTEMBER 1, 2016

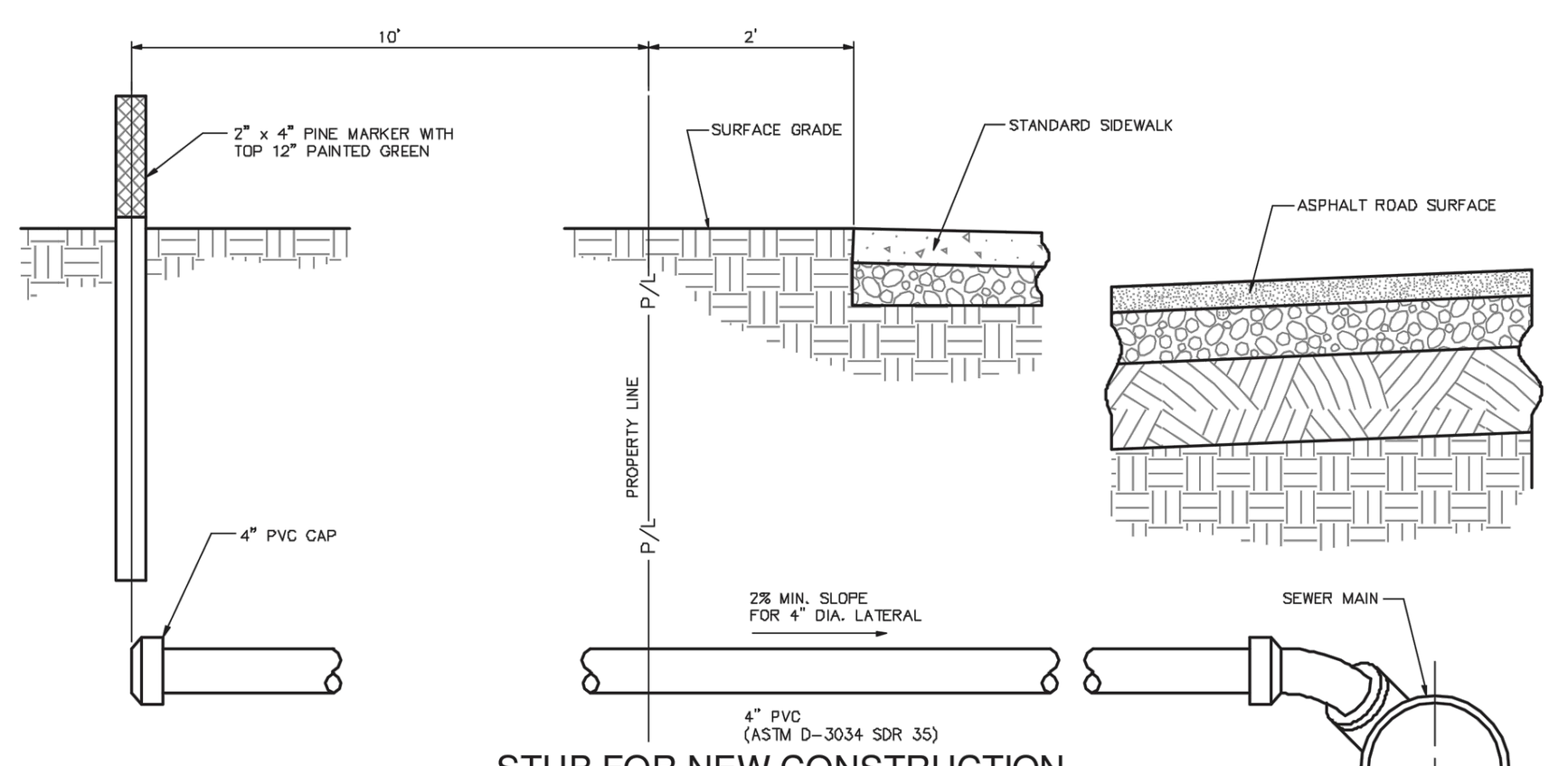

STUB FOR NEW CONSTRUCTION

NOTES FOR CONNECTING TO NEW SEWER MAIN:
1. CONNECTION TO MAIN SHALL BE BY WYE'S OR TEE'S INSTALLED AS PART OF THE SEWER MAIN CONSTRUCTION.
2. LOCATION OF STUB TO BE LOCATED PER APPROVED UTILITY PLAN.
3. SHOW CENTERLINE STATION OF THE LATERAL FROM THE NEAREST DOWNSTREAM MANHOLE. USE SAME STATIONING USED FOR SEWER MAIN.
4. TRAFFIC RATED CLEANOUT LID REQ'D IF LOCATED IN TRAFFIC AREAS.

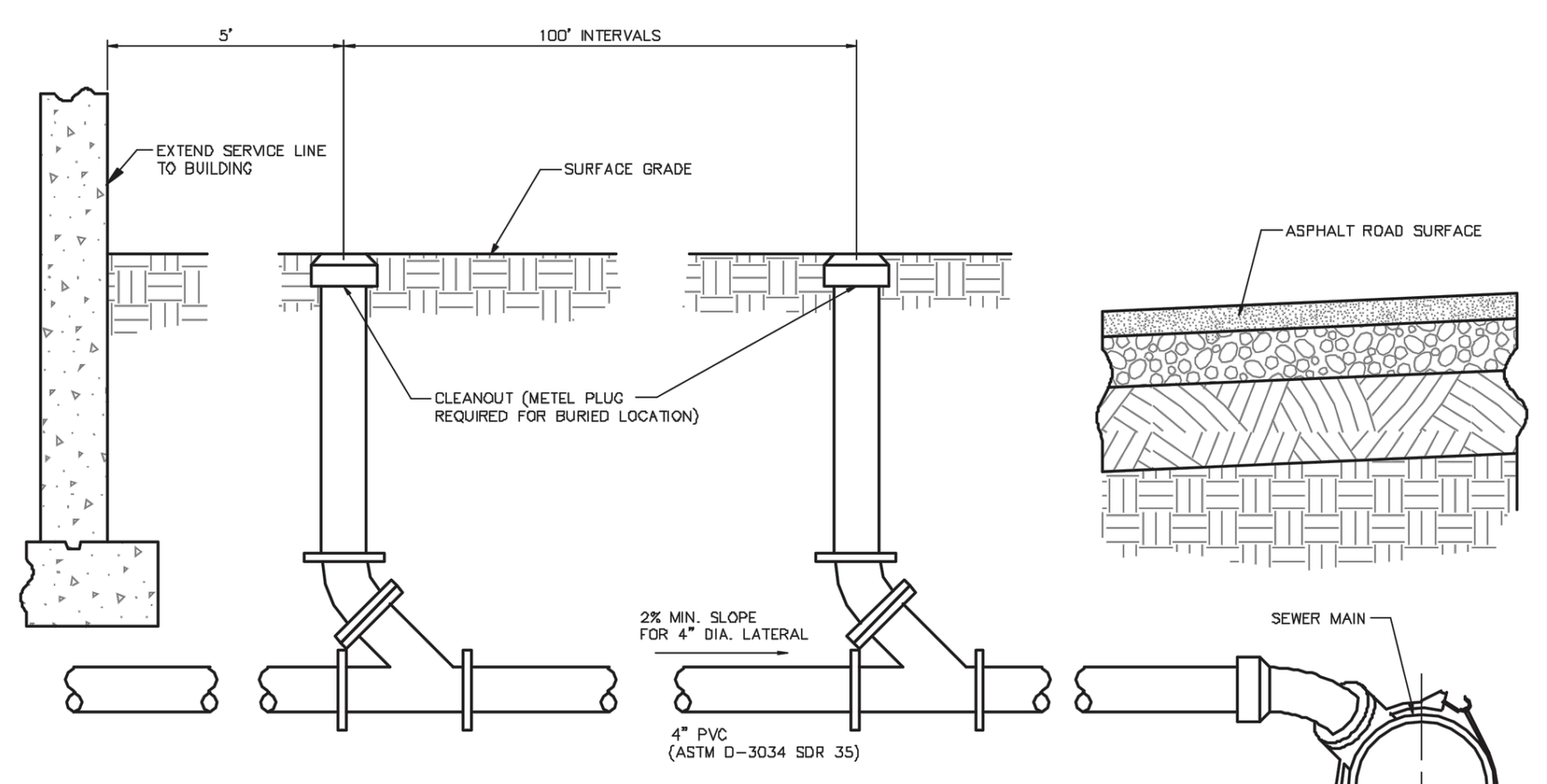

TIE TO EXISTING CONSTRUCTION

NOTES FOR CONNECTING TO EXISTING SEWER MAIN:
1. CONNECTION TO BE MADE IN PRESENCE OF PUBLIC WORKS INSPECTOR.
2. INSERTA-TEE OR EQUAL INSTALLED PER MANUFACTURER RECOMMENDATIONS.
3. TRAFFIC RATED CLEANOUT LID REQ'D IF LOCATED IN TRAFFIC AREAS.

JUB

STATEMENT OF USE
THIS DOCUMENT AND ANY ILLUSTRATIONS HEREON ARE PROVIDED AS STANDARD CONSTRUCTION DETAILS WITHIN THE TOWN OF VINEYARD. DEVIATION FROM THIS DOCUMENT REQUIRES APPROVAL FROM THE TOWN OF VINEYARD. THE TOWN OF VINEYARD CORPORATION CAN NOT BE HELD LIABLE FOR MISUSE OR CHANGES REGARDING THIS DOCUMENT.

REVISION: 1 STANDARDS UPDATE — JMM — DEO — 8/08/16

VINEYARD STAY CONNECTED

TYPICAL SEWER LATERAL
TOWN OF VINEYARD
STANDARD DRAWING NUMBER: 20
CAD DWG: V_STD_DWGS; PLOT SCALE: 1.000; DRAWN BY: JMM; DESIGN BY: CRW; CHECKED BY: DEO; ADOPTED DATE: SEPTEMBER 1, 2016

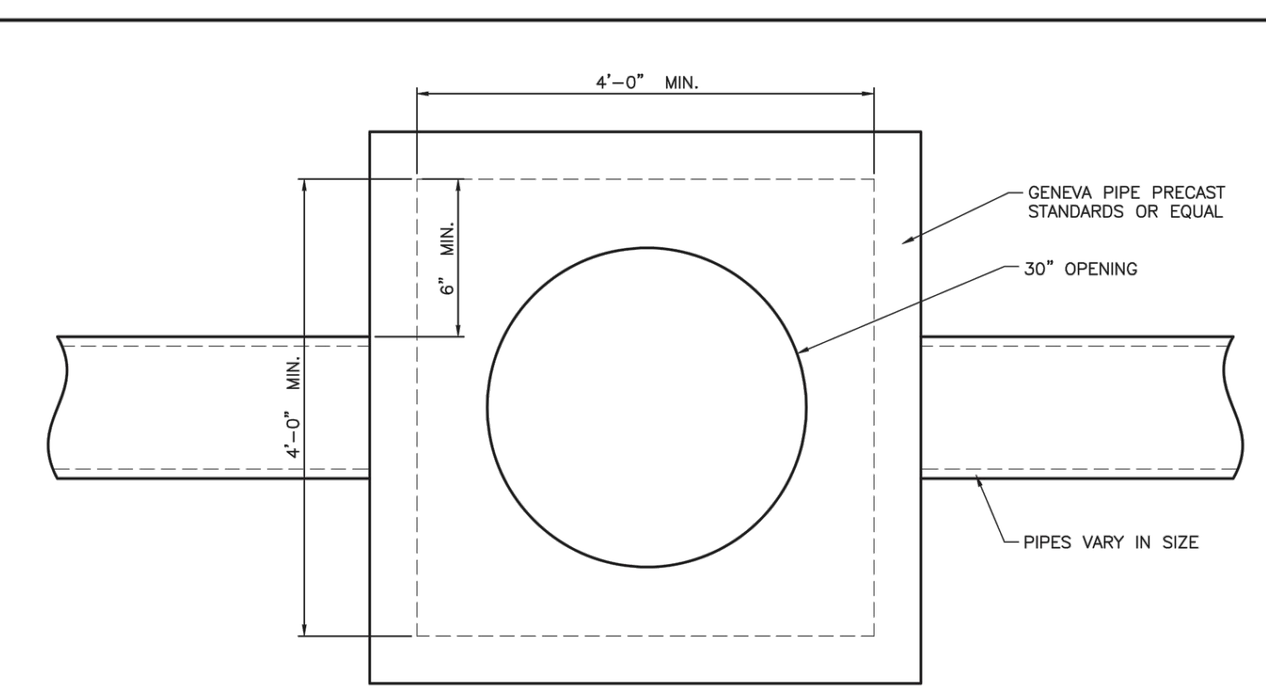

PLAN VIEW

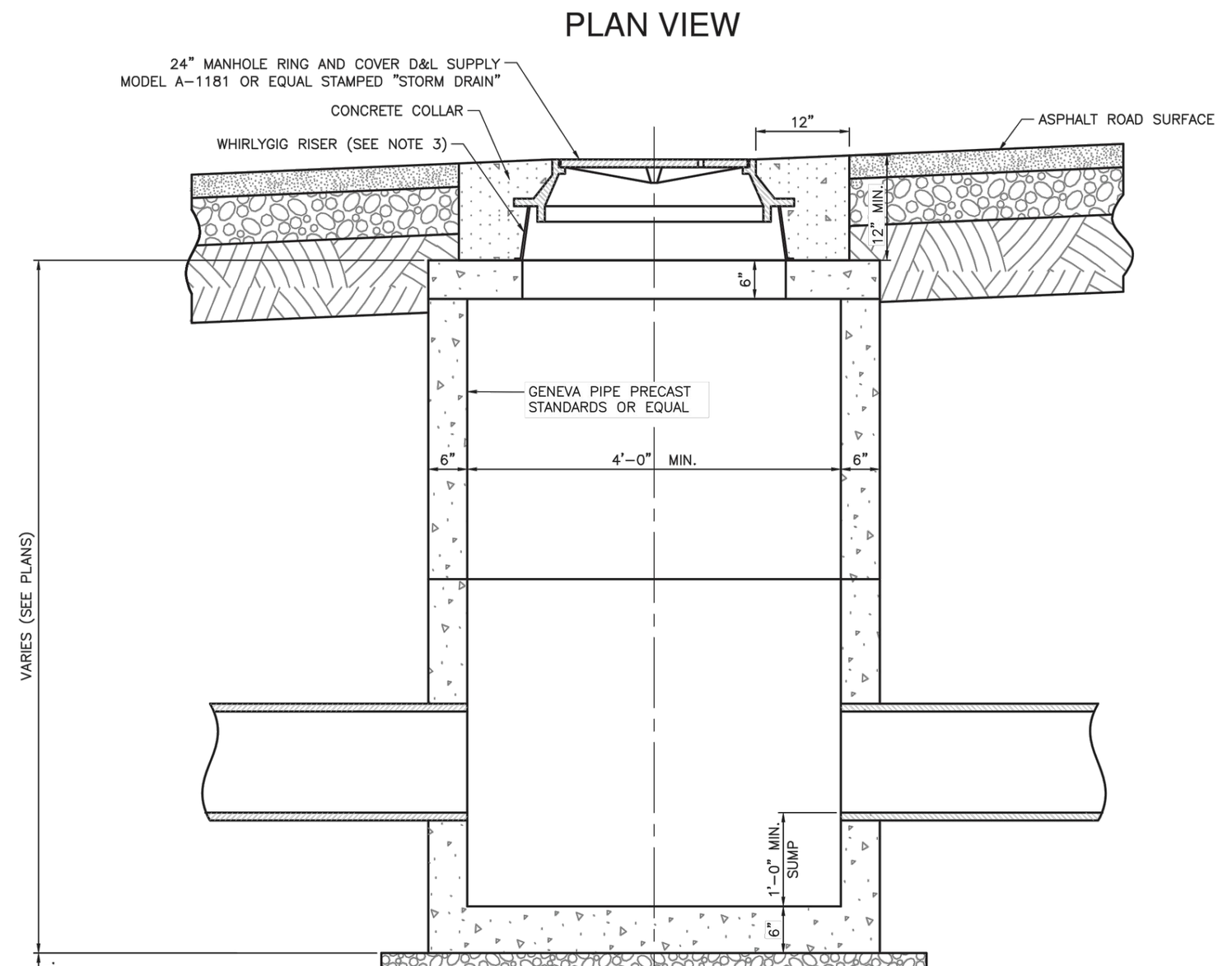

ELEVATION SECTION

NOTES:
1. MANHOLE COVER TO BE A SOLID LID CONTAINING ONE PICK HOLE. SEE SPECIFICATION DIVISION 5 FOR COVER LABEL. D&L SUPPLY P/N A-1181 (OR EQUAL).
2. FLAT LIDS SHALL MEET H20 LIVE LOADING. NO FLAT RING AND COVERS WILL BE ALLOWED UNLESS APPROVED BY TOWN ENGINEER.
3. WHIRLYGIG RISER OR EQUAL SHALL BE USED INSTEAD OF GRADE RINGS TO ADJUST MANHOLE RING AND COVER TO GRADE.
4. 18" MAXIMUM WHIRLYGIG RISER HEIGHT.

JUB

STATEMENT OF USE
THIS DOCUMENT AND ANY ILLUSTRATIONS HEREON ARE PROVIDED AS STANDARD CONSTRUCTION DETAILS WITHIN THE TOWN OF VINEYARD. DEVIATION FROM THIS DOCUMENT REQUIRES APPROVAL FROM THE TOWN OF VINEYARD. THE TOWN OF VINEYARD CORPORATION CAN NOT BE HELD LIABLE FOR MISUSE OR CHANGES REGARDING THIS DOCUMENT.

REVISION: 1 STANDARDS UPDATE — JMM — DEO — 1/11/17

VINEYARD STAY CONNECTED

STORM DRAIN JUNCTION BOX DETAIL
TOWN OF VINEYARD
STANDARD DRAWING NUMBER: 9A
CAD DWG: V_STD_DWGS; PLOT SCALE: 1.000; DRAWN BY: JMM; DESIGN BY: CRW; CHECKED BY: DEO; ADOPTED DATE: SEPTEMBER 1, 2016

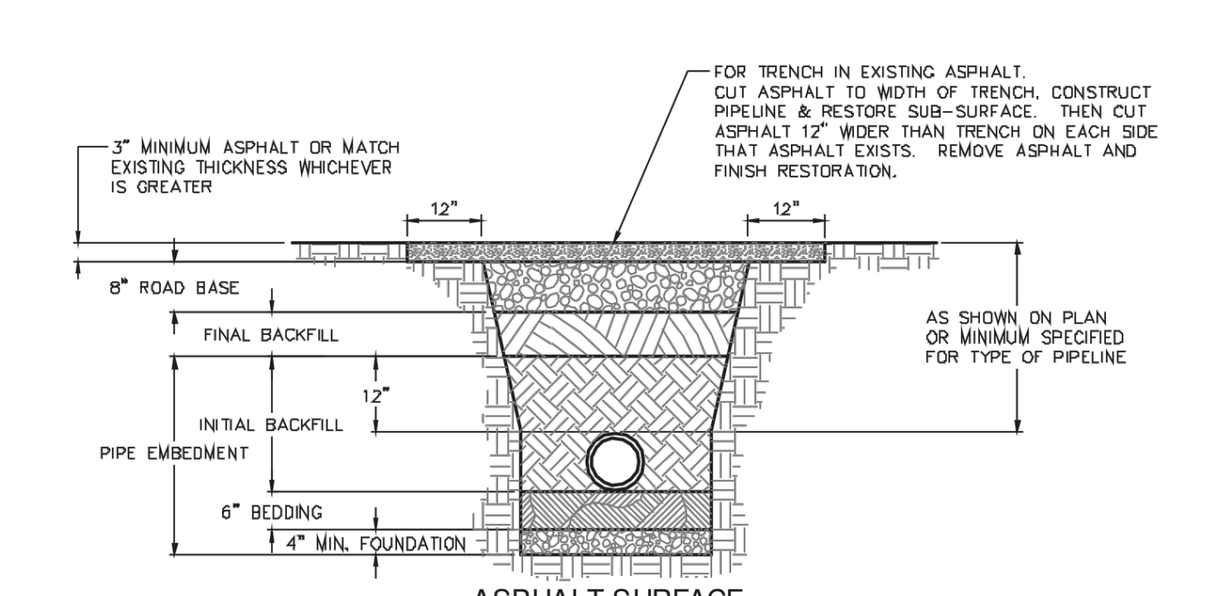

ASPHALT SURFACE

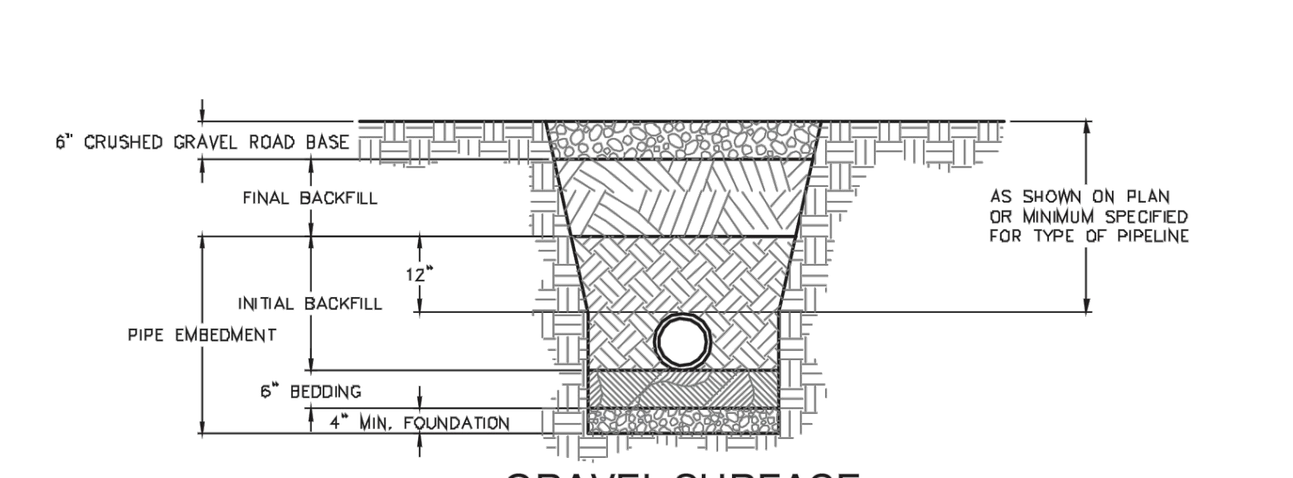

GRAVEL SURFACE

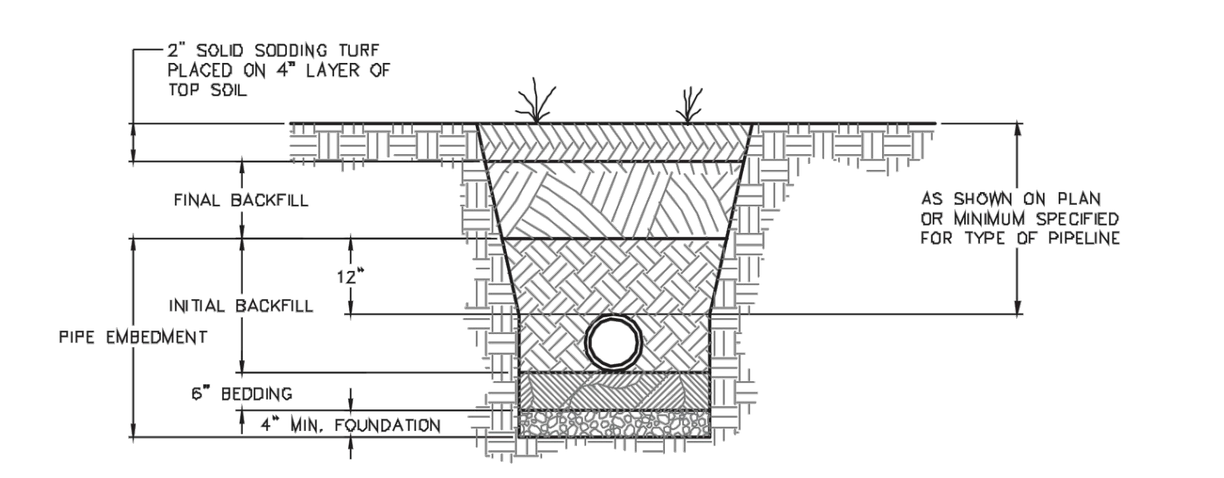

TURF SURFACE

NOTES:
1. SLOPE TRENCH TO MEET OSHA REQUIREMENTS (LATEST EDITION) OR USE TRENCH BOX.
2. FOUNDATION AND BEDDING MATERIAL AS REQUIRED.
3. INSTALL PIPELINES ON STABLE FOUNDATION WITH UNIFORM BEARING FOR FULL LENGTH OF BARREL, EXCAVATE IN BEDDING FOR ALL PIPE JOINTS.
4. NO PATCHES WITHIN EXISTING PATCHES.

JUB

STATEMENT OF USE
THIS DOCUMENT AND ANY ILLUSTRATIONS HEREON ARE PROVIDED AS STANDARD CONSTRUCTION DETAILS WITHIN THE TOWN OF VINEYARD. DEVIATION FROM THIS DOCUMENT REQUIRES APPROVAL FROM THE TOWN OF VINEYARD. THE TOWN OF VINEYARD CORPORATION CAN NOT BE HELD LIABLE FOR MISUSE OR CHANGES REGARDING THIS DOCUMENT.

REVISION: 1 STANDARDS UPDATE — JMM — DEO — 8/08/16

VINEYARD STAY CONNECTED

TYPICAL TRENCH SECTION
TOWN OF VINEYARD
STANDARD DRAWING NUMBER: 13
CAD DWG: V_STD_DWGS; PLOT SCALE: 1.000; DRAWN BY: JMM; DESIGN BY: CRW; CHECKED BY: DEO; ADOPTED DATE: SEPTEMBER 1, 2016

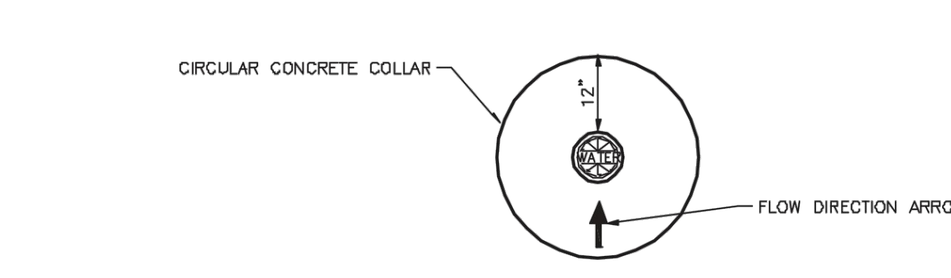

CULINARY WATER VALVE CONCRETE COLLAR

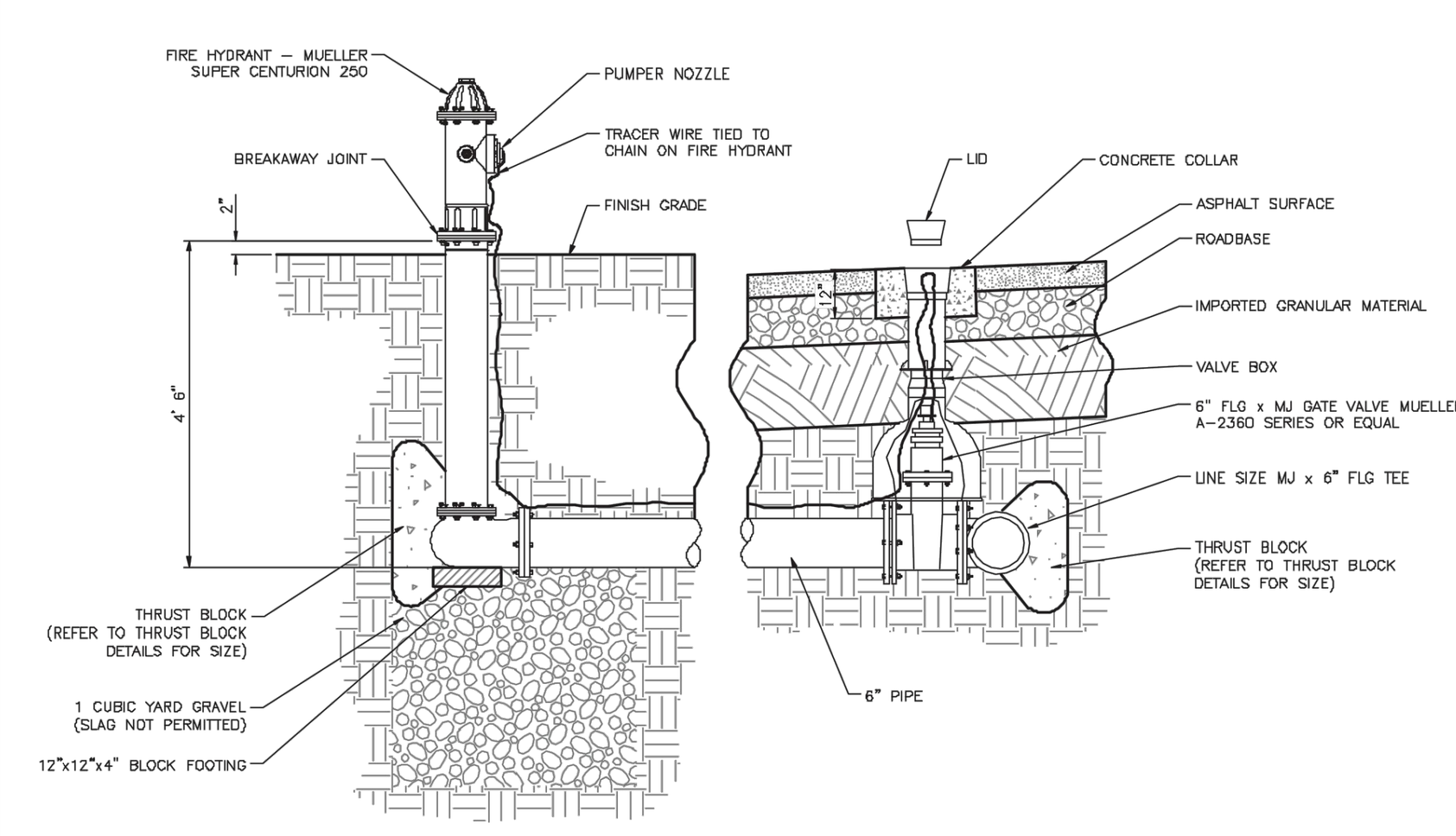

FIRE HYDRANT & WATER VALVE

NOTES:
1. BOLTS: APPLY ONE (1) COAT OF FM2 GREASE (FOOD GRADE) TO ALL EXPOSED SURFACES OF BOLTS AND TO ALL BOLT THREADS AFTER INSTALLATION OF PIPING, FITTINGS, VALVES, AND COUPLINGS.
2. VALVES, FITTINGS, CONNECTIONS, ETC.: ENCASE ALL BURIED DUCTILE IRON VALVES, FITTINGS, CONNECTIONS AND SPECIALTIES IN MINIMUM 8 MIL. BLACK POLYETHYLENE SHEETS IN ACCORDANCE WITH AWWA C-105. SECURE POLYETHYLENE SHEETS TO THE PIPE AS SPECIFIED ABOVE.
3. DUCTILE IRON PIPE: ENCASE BURIED DUCTILE IRON PIPE IN MINIMUM 8 MIL. POLYETHYLENE SHEETS IN ACCORDANCE WITH AWWA C105 IN ALL AREAS AND SOIL TYPES AS SHOWN ON THE PROJECT PLANS OR AS SPECIFIED BY THE ENGINEER.
4. NO RISER KITS SHALL BE INSTALLED ABOVE FINISHED GRADE.

JUB

STATEMENT OF USE
THIS DOCUMENT AND ANY ILLUSTRATIONS HEREON ARE PROVIDED AS STANDARD CONSTRUCTION DETAILS WITHIN THE TOWN OF VINEYARD. DEVIATION FROM THIS DOCUMENT REQUIRES APPROVAL FROM THE TOWN OF VINEYARD. THE TOWN OF VINEYARD CORPORATION CAN NOT BE HELD LIABLE FOR MISUSE OR CHANGES REGARDING THIS DOCUMENT.

REVISION: 1 STANDARDS UPDATE — JMM — DEO — 8/08/16

VINEYARD STAY CONNECTED

FIRE HYDRANT AND WATER VALVE DETAIL
TOWN OF VINEYARD
STANDARD DRAWING NUMBER: 17
CAD DWG: V_STD_DWGS; PLOT SCALE: 1.000; DRAWN BY: JMM; DESIGN BY: CRW; CHECKED BY: DEO; ADOPTED DATE: SEPTEMBER 1, 2016

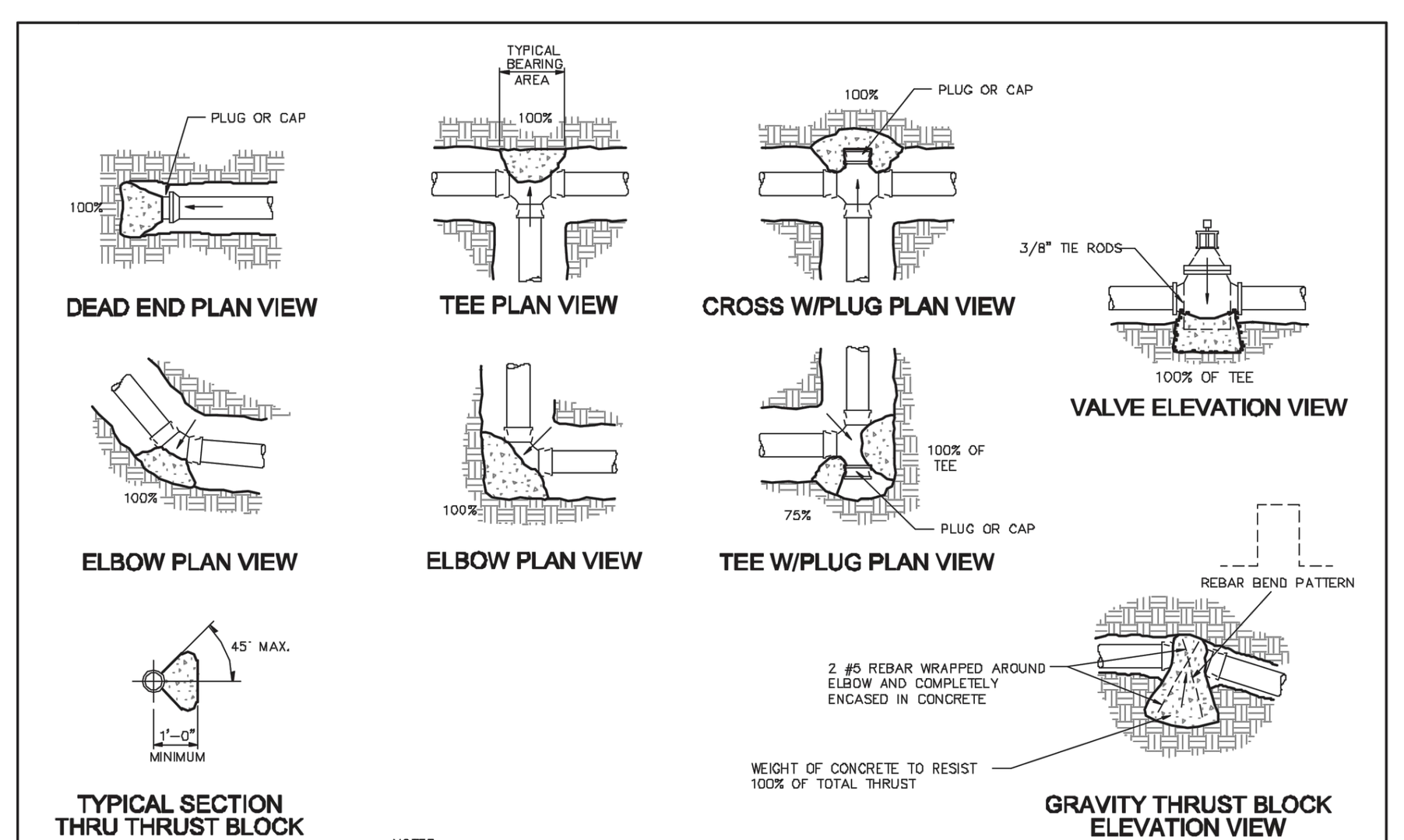

NOTES:
1. THE FIGURE (100%) AT THE THRUST BLOCK INDICATES PER CENT OF TOTAL THRUST TO BE APPLIED FOR BEARING AREA.
2. THE ARROW (——►) INDICATES THRUST DIRECTION.
3. CONCRETE FOR THRUST BLOCKS TO BE 3000 P.S.I. .
4. ALL MJ AND FLANGED FITTINGS TO BE WRAPPED WITH 8 MIL POLYETHYLENE PRIOR TO PLACING CONCRETE THRUST BLOCK
5. WHERE SUFFICIENT BEARING SURFACE IS NOT AVAILABLE FOR THRUST BLOCK, MEGALUG THRUST RESTRAINING GLANDS MAY BE USED. MEGALUG THRUST RESTRAINING GLANDS SHALL BE INSTALLED PER MANUFACTURER'S RECOMENDATION INCLUDING ANY JOINT RESTRAINT. ANY USE OF MEGALUC OR CHANGE TO THE THRUST BEARING CHART MUST BE REVIEWED BY THE ENGINEER.
6. MEGALUGS OR EQUAL REQ'D AT ALL FITTING TO PIPE JOINTS.

TABLE 1

USE WHEN LINE PRESSURE AND SOIL BEARING STRENGTH ARE KNOWN.

LINE PRESSURE: psi
TEST PRESSURE (sf = 1.5): psi
SOIL BEARING STRENGTH: psf
(SOIL BEARING STRENGTH DETERMINED FROM A GEOTECHNICAL INVESTIGATION.)

SIDE THRUST (lbs.) PER 1 PSI LINE PRESSURE

PIPE SIZE (")	PIPE AREA (sq. in.)	DEAD END OR TEE (lbs.)	90° BEND (lbs.)	45° BEND (lbs.)	22.5° BEND (lbs.)	11.25° BEND (lbs.)
4	14.39	22	31	17	9	5
6	31.17	49	69	37	19	10
8	56.88	86	121	66	34	17
10	86.92	131	185	100	51	26
12	124.29	187	264	143	73	37
14	168.33	253	358	194	99	50
16	219.56	330	466	253	129	65
18	277.59	417	589	319	163	82
20	342.41	514	727	394	201	101
24	490.09	736	1040	563	287	145
30	757.69	1137	1608	870	444	223

TABLE 2

USE WHEN LINE PRESSURE AND SOIL BEARING STRENGTH ARE NOT KNOWN.

LINE PRESSURE: 120 psi
TEST PRESSURE (sf = 1.5): 180 psi
SOIL BEARING STRENGTH: 1,500 psi

AREA OF BEARING REQUIRED (sq. ft.)

PIPE SIZE (")	PIPE AREA (sq. in.)	DEAD END OR TEE (lbs.)	90° BEND (lbs.)	45° BEND (lbs.)	22.5° BEND (lbs.)	11.25° BEND (lbs.)
4	14.39	1.7	2.4	1.3	0.7	0.3
6	31.17	3.9	5.5	3.0	1.5	0.8
8	56.88	6.8	9.7	5.2	2.7	1.3
10	86.92	10.4	14.8	8.0	4.1	2.0
12	124.29	14.9	21.1	11.4	5.8	2.9
14	168.33	20.2	28.6	15.5	7.9	4.0
16	219.56	26.3	37.3	20.2	10.3	5.2
18	277.59	33.3	47.1	25.5	13.0	6.5
20	342.41	41.1	58.1	31.4	16.0	8.1
24	490.09	58.8	83.2	45.0	22.0	11.5
30	757.69	90.9	128.6	69.6	35.5	17.8

EXAMPLE FOR TABLE 1:
8-INCH 90° BEND
LINE PRESSURE = 100 psi
FROM TABLE: THRUST PER 1 psi =121 lbs.
CALCULATE TOTAL THRUST: 100 psi x 121 lbs/psi = 12,100 lbs
SOIL BEARING STRENGTH = 2,000 psf
AREA OF BEARING REQUIRED FOR THRUST BLOCK IS 6.1 sq. ft. (12,100 lbs / 2,000 psf = 6.1 sf. ft.)

* PIPE AREA IS BASED ON LARGEST ACTUAL INSIDE DIAMETER OF DUCTILE IRON PIPE.

JUB

STATEMENT OF USE
THIS DOCUMENT AND ANY ILLUSTRATIONS HEREON ARE PROVIDED AS STANDARD CONSTRUCTION DETAILS WITHIN THE TOWN OF VINEYARD. DEVIATION FROM THIS DOCUMENT REQUIRES APPROVAL FROM THE TOWN OF VINEYARD. THE TOWN OF VINEYARD CORPORATION CAN NOT BE HELD LIABLE FOR MISUSE OR CHANGES REGARDING THIS DOCUMENT.

REVISION: 1 STANDARDS UPDATE — JMM — DEO — 8/08/16

VINEYARD STAY CONNECTED

THRUST BLOCK DETAILS
TOWN OF VINEYARD
STANDARD DRAWING NUMBER: 18
CAD DWG: V_STD_DWGS; PLOT SCALE: 1.000; DRAWN BY: JMM; DESIGN BY: CRW; CHECKED BY: DEO; ADOPTED DATE: SEPTEMBER 1, 2016

bhd ARCHITECTS
www.bhdarchitects.com
Phone 801.571.0010
Fax 801.571.0303
Toll Free 888.571.0010
65 East Wadsworth Park Drive
Suite 205 Draper, Utah 84020

PROFESSIONAL ENGINEER
08-19-24
No. 11088925-2202
DANIEL J. CANNING
STATE OF UTAH

THE CHURCH OF JESUS CHRIST OF LATTER-DAY SAINTS

Orem YSA 3rd 10 Ward Building
Orem UT YSA 3rd Stake

Approx. 1700 West 575 South
Vineyard, Utah 84059

Date:	BHD #:	County Parcel:	Plan Series:	Owner #:
15 Aug 2024	2344	39:228:0001	2024 10 Ward SC	590-1876

Drawing Issue and Revision Schedule

#	Date	Description
1	15 Aug 2024	Bid Documents

Civil Details

C541

Printed: 19 Aug 2024 5:16 PM

PROPOSED LAYOUT		CONCEPTUAL ELEVATIONS:	
244	STORMTECH SC-800 CHAMBERS	MAXIMUM ALLOWABLE GRADE (TOP OF PAVEMENT/UNPAVED):	11.25
34	STORMTECH SC-800 END CAPS	MINIMUM ALLOWABLE GRADE (UNPAVED WITH TRAFFIC):	5.00
6	STONE ABOVE (in)	MINIMUM ALLOWABLE GRADE (UNPAVED NO TRAFFIC):	4.50
6	STONE BELOW (in)	MINIMUM ALLOWABLE GRADE (TOP OF RIGID CONCRETE PAVEMENT):	4.50
40	STONE VOID	MINIMUM ALLOWABLE GRADE (BASE OF FLEXIBLE PAVEMENT):	4.50
21094	INSTALLED SYSTEM VOLUME (CF) (PERIMETER STONE INCLUDED) (COVER STONE INCLUDED) (BASE STONE INCLUDED)	TOP OF STONE:	3.75
		TOP OF SC-800 CHAMBER:	3.25
		24" x 24" BOTTOM MANIFOLD INVERT:	0.69
		24" ISOLATOR ROW PLUS INVERT:	0.69
9075	SYSTEM AREA (SF)	12" x 12" BOTTOM MANIFOLD INVERT:	0.63
403.8	SYSTEM PERIMETER (ft)	12" BOTTOM CONNECTION INVERT:	0.63
		BOTTOM OF SC-800 CHAMBER:	0.50
		UNDERDRAIN INVERT:	0.00
		BOTTOM OF STONE:	0.00

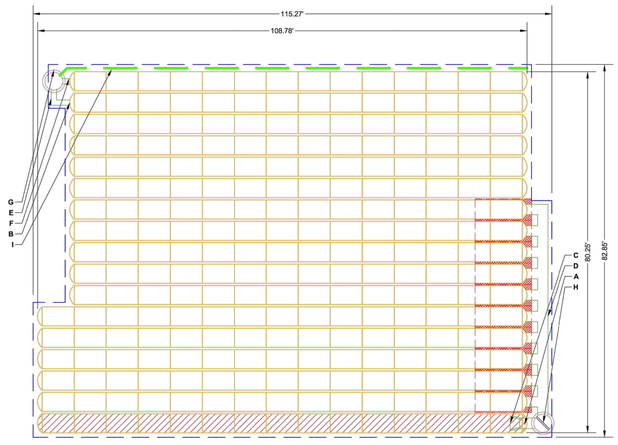

ISOLATOR ROW PLUS (SEE DETAIL)

PLACE MINIMUM 12.50' OF ADSPLUS625 WOVEN GEOTEXTILE OVER BEDDING STONE AND UNDERNEATH CHAMBER FEET FOR SCOUR PROTECTION AT ALL CHAMBER INLET ROWS

BED LIMITS

NOTES

1. MANIFOLD SIZE TO BE DETERMINED BY SITE DESIGN ENGINEER. SEE TECH NOTE #6.32 FOR MANIFOLD SIZING GUIDANCE.
2. DUE TO THE ADAPTATION OF THIS CHAMBER SYSTEM TO SPECIFIC SITE AND DESIGN CONSTRAINTS, IT MAY BE NECESSARY TO CUT AND COUPLE ADDITIONAL PIPE TO STANDARD MANIFOLD COMPONENTS IN THE FIELD.
3. THE SITE DESIGN ENGINEER MUST REVIEW ELEVATIONS AND IF NECESSARY ADJUST GRADING TO ENSURE THE CHAMBER COVER REQUIREMENTS ARE MET.
4. THIS CHAMBER SYSTEM WAS DESIGNED WITHOUT SITE-SPECIFIC INFORMATION ON SOIL CONDITIONS OR BEARING CAPACITY. THE SITE DESIGN ENGINEER IS RESPONSIBLE FOR DETERMINING THE SUITABILITY OF THE SOIL AND PROVIDING THE BEARING CAPACITY OF THE INSITU SOILS. THE BASE STONE DEPTH MAY BE INCREASED OR DECREASED ONCE THIS INFORMATION IS PROVIDED.
5. **NOT FOR CONSTRUCTION:** THIS LAYOUT IS FOR DIMENSIONAL PURPOSES ONLY TO PROVE CONCEPT & THE REQUIRED STORAGE VOLUME CAN BE ACHIEVED ON SITE.

*INVERT ABOVE BASE OF CHAMBER

PART TYPE	ITEM ON LAYOUT	DESCRIPTION	INVERT*	MAX FLOW
PREFABRICATED END CAP	A	24" BOTTOM CORED END CAP, PART#: SC800EPE24BPC / TYP OF ALL 24" BOTTOM CONNECTIONS AND ISOLATOR PLUS ROWS	2.30"	
PREFABRICATED END CAP	B	12" BOTTOM CORED END CAP, PART#: SC800EPE12BPC / TYP OF ALL 12" BOTTOM CONNECTIONS	1.60"	
FLAMP	C	INSTALL FLAMP ON 24" ACCESS PIPE / PART#: SC74024RAMP		
MANIFOLD	D	24" x 24" BOTTOM MANIFOLD, ADS N-12	2.30"	
MANIFOLD	E	12" x 12" BOTTOM MANIFOLD, ADS N-12	1.60"	
PIPE CONNECTION	F	12" BOTTOM CONNECTION	1.60"	
CONCRETE STRUCTURE	G	OCS (DESIGN BY ENGINEER / PROVIDED BY OTHERS)		4.0 CFS OUT
CONCRETE STRUCTURE	H	(DESIGN BY ENGINEER / PROVIDED BY OTHERS)		27.1 CFS IN
WEIR				
UNDERDRAIN	I	6" ADS N-12 DUAL WALL PERFORATED HDPE UNDERDRAIN		

UNDERDRAIN DETAIL

NTS

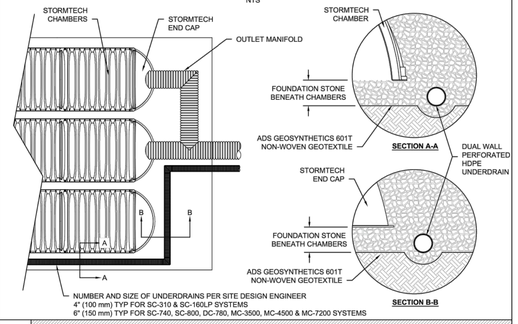

4 UNDERDRAIN DETAIL

SPACE INTENTIONALLY LEFT BLANK

SC-800 TECHNICAL SPECIFICATION

NTS

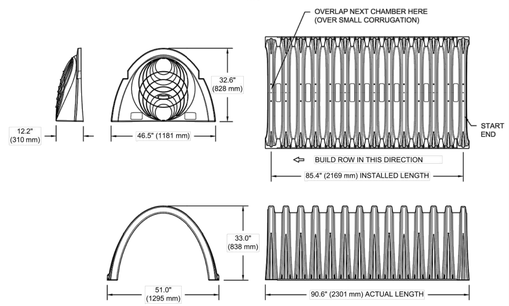

NOMINAL CHAMBER SPECIFICATIONS

SIZE (W X H X INSTALLED LENGTH)	51.0" X 33.0" X 85.4"	(1295 mm X 838 mm X 2169 mm)
CHAMBER STORAGE	50.6 CUBIC FEET	(1.43 m³)
MINIMUM INSTALLED STORAGE*	81.0 CUBIC FEET	(2.29 m³)
WEIGHT	81.8 lbs.	(37.1 kg)

NOMINAL END CAP SPECIFICATIONS

SIZE (W X H X INSTALLED LENGTH)	46.5" X 32.6" X 10.5"	(1181 mm X 828 mm X 267 mm)
END CAP STORAGE	3.4 CUBIC FEET	(0.09 m³)
MINIMUM INSTALLED STORAGE**	15.4 CUBIC FEET	(0.43 m³)
WEIGHT	15.7 lbs.	(7.1 kg)

* ASSUMES 6" (152 mm) STONE ABOVE, BELOW, AND BETWEEN CHAMBERS
**ASSUMES 6" (152 mm) STONE ABOVE AND BELOW END CAPS, 6" (152 mm) BETWEEN ROWS, 12" (305 mm) BEYOND END CAPS

PRE-CORED HOLES AT BOTTOM OF END CAP FOR PART NUMBERS ENDING WITH "BPC"
PRE-CORED HOLES AT TOP OF END CAP FOR PART NUMBERS ENDING WITH "TPC"

PART #	STUB	B	C
SC800EPE06TPC	6" (150 mm)	21.4" (544 mm)	---
SC800EPE06BPC		---	0.9" (23 mm)
SC800EPE08TPC	8" (200 mm)	19.2" (488 mm)	---
SC800EPE08BPC		---	1.0" (25 mm)
SC800EPE10TPC	10" (250 mm)	17.0" (432 mm)	---
SC800EPE10BPC		---	1.2" (30 mm)
SC800EPE12TPC	12" (300 mm)	14.4" (366 mm)	---
SC800EPE12BPC		---	1.6" (41 mm)
SC800EPE15TPC	15" (375 mm)	11.3" (287 mm)	---
SC800EPE15BPC		---	1.7" (43 mm)
SC800EPE18TPC	18" (450 mm)	8.0" (203 mm)	---
SC800EPE18BPC		---	2.0" (51 mm)
SC800EPE24BPC	24" (600 mm)	---	2.3" (58 mm)
SC800EPE	NONE	SOLID END CAP	

NOTE: ALL DIMENSIONS ARE NOMINAL

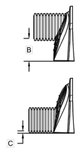

2 SC-800 TECHNICAL SPECIFICATION

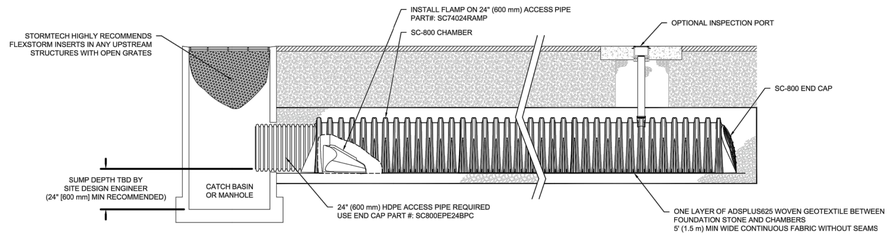

SC-800 ISOLATOR ROW PLUS DETAIL
NTS

3 SC-800 ISOLATOR ROW PLUS DETAIL

SPACE INTENTIONALLY LEFT BLANK

INSPECTION & MAINTENANCE

STEP 1) INSPECT ISOLATOR ROW PLUS FOR SEDIMENT
- A. INSPECTION PORTS (IF PRESENT)
  - A.1. REMOVE/OPEN LID ON NYLOPLAST INLINE DRAIN
  - A.2. REMOVE AND CLEAN FLEXSTORM FILTER IF INSTALLED
  - A.3. USING A FLASHLIGHT AND STADIA ROD, MEASURE DEPTH OF SEDIMENT AND RECORD ON MAINTENANCE LOG
  - A.4. LOWER A CAMERA INTO ISOLATOR ROW PLUS FOR VISUAL INSPECTION OF SEDIMENT LEVELS (OPTIONAL)
  - A.5. IF SEDIMENT IS AT, OR ABOVE, 3" (80 mm) PROCEED TO STEP 2. IF NOT, PROCEED TO STEP 3.
- B. ALL ISOLATOR PLUS ROWS
  - B.1. REMOVE COVER FROM STRUCTURE AT UPSTREAM END OF ISOLATOR ROW PLUS
  - B.2. USING A FLASHLIGHT, INSPECT DOWN THE ISOLATOR ROW PLUS THROUGH OUTLET PIPE
    - i) MIRRORS ON POLES OR CAMERAS MAY BE USED TO AVOID A CONFINED SPACE ENTRY
    - ii) FOLLOW OSHA REGULATIONS FOR CONFINED SPACE ENTRY IF ENTERING MANHOLE
  - B.3. IF SEDIMENT IS AT, OR ABOVE, 3" (80 mm) PROCEED TO STEP 2. IF NOT, PROCEED TO STEP 3.

STEP 2) CLEAN OUT ISOLATOR ROW PLUS USING THE JETVAC PROCESS
- A. A FIXED CULVERT CLEANING NOZZLE WITH REAR FACING SPREAD OF 45° (1.1 m) OR MORE IS PREFERRED
- B. APPLY MULTIPLE PASSES OF JETVAC UNTIL BACKFLUSH WATER IS CLEAN
- C. VACUUM STRUCTURE SUMP AS REQUIRED

STEP 3) REPLACE ALL COVERS, GRATES, FILTERS, AND LIDS; RECORD OBSERVATIONS AND ACTIONS.

STEP 4) INSPECT AND CLEAN BASINS AND MANHOLES UPSTREAM OF THE STORMTECH SYSTEM.

NOTES

1. INSPECT EVERY 6 MONTHS DURING THE FIRST YEAR OF OPERATION. ADJUST THE INSPECTION INTERVAL BASED ON PREVIOUS OBSERVATIONS OF SEDIMENT ACCUMULATION AND HIGH WATER ELEVATIONS.
2. CONDUCT JETTING AND VACTORING ANNUALLY OR WHEN INSPECTION SHOWS THAT MAINTENANCE IS NECESSARY.

ACCEPTABLE FILL MATERIALS: STORMTECH SC-800 CHAMBER SYSTEMS

	MATERIAL LOCATION	DESCRIPTION	AASHTO MATERIAL CLASSIFICATIONS	COMPACTION / DENSITY REQUIREMENT
D	**FINAL FILL:** FILL MATERIAL FOR LAYER 'D' STARTS FROM THE TOP OF THE 'C' LAYER TO THE BOTTOM OF FLEXIBLE PAVEMENT OR UNPAVED FINISHED GRADE ABOVE. NOTE THAT PAVEMENT SUBBASE MAY BE PART OF THE 'D' LAYER.	ANY SOIL/ROCK MATERIALS, NATIVE SOILS, OR PER ENGINEER'S PLANS. CHECK PLANS FOR PAVEMENT SUBGRADE REQUIREMENTS.	N/A	PREPARE PER SITE DESIGN ENGINEER'S PLANS. PAVED INSTALLATIONS MAY HAVE STRINGENT MATERIAL AND PREPARATION REQUIREMENTS.
C	**INITIAL FILL:** FILL MATERIAL FOR LAYER 'C' STARTS FROM THE TOP OF THE EMBEDMENT STONE ('B' LAYER) TO 15" (375 mm) ABOVE THE TOP OF THE CHAMBER. NOTE THAT PAVEMENT SUBBASE MAY BE A PART OF THE 'C' LAYER.	GRANULAR WELL-GRADED SOIL/AGGREGATE MIXTURES, <35% FINES OR PROCESSED AGGREGATE. MOST PAVEMENT SUBBASE MATERIALS CAN BE USED IN LIEU OF THIS LAYER.	AASHTO M145[1] A-1, A-2-4, A-3 OR AASHTO M43[1] 3, 357, 4, 467, 5, 56, 57, 6, 67, 68, 7, 78, 8, 89, 9, 10	BEGIN COMPACTIONS AFTER 12" (300 mm) OF MATERIAL OVER THE CHAMBERS IS REACHED. COMPACT ADDITIONAL LAYERS IN 6" (150 mm) MAX LIFTS TO A MIN. 95% PROCTOR DENSITY FOR WELL GRADED MATERIAL AND 95% RELATIVE DENSITY FOR PROCESSED AGGREGATE MATERIALS. ROLLER GROSS VEHICLE WEIGHT NOT TO EXCEED 12,000 lbs (53 kN). DYNAMIC FORCE NOT TO EXCEED 20,000 lbs (89 kN).
B	**EMBEDMENT STONE:** FILL SURROUNDING THE CHAMBERS FROM THE FOUNDATION STONE ('A' LAYER) TO THE 'C' LAYER ABOVE.	CLEAN, CRUSHED, ANGULAR STONE OR RECYCLED CONCRETE[2]	AASHTO M43[1] 3, 357, 4, 467, 5, 56, 57	NO COMPACTION REQUIRED.
A	**FOUNDATION STONE:** FILL BELOW CHAMBERS FROM THE SUBGRADE UP TO THE FOOT (BOTTOM) OF THE CHAMBER.	CLEAN, CRUSHED, ANGULAR STONE OR RECYCLED CONCRETE[2]	AASHTO M43[1] 3, 357, 4, 467, 5, 56, 57	PLATE COMPACT OR ROLL TO ACHIEVE A FLAT SURFACE.[2,3]

PLEASE NOTE:
1. THE LISTED AASHTO DESIGNATIONS ARE FOR GRADATIONS ONLY. THE STONE MUST ALSO BE CLEAN, CRUSHED, ANGULAR. FOR EXAMPLE, A SPECIFICATION FOR #4 STONE WOULD STATE: "CLEAN, CRUSHED, ANGULAR NO. 4 (AASHTO M43) STONE".
2. STORMTECH COMPACTION REQUIREMENTS ARE MET FOR 'A' LOCATION MATERIALS WHEN PLACED AND COMPACTED IN 6" (150 mm) (MAX) LIFTS USING TWO FULL COVERAGES WITH A VIBRATORY COMPACTOR.
3. WHERE INFILTRATION SURFACES MAY BE COMPROMISED BY COMPACTION, FOR STANDARD DESIGN LOAD CONDITIONS, A FLAT SURFACE MAY BE ACHIEVED BY RAKING OR DRAGGING WITHOUT COMPACTION EQUIPMENT. FOR SPECIAL LOAD DESIGNS, CONTACT STORMTECH FOR COMPACTION REQUIREMENTS.
4. ONCE LAYER 'C' IS PLACED, ANY SOIL/MATERIAL CAN BE PLACED IN LAYER 'D' UP TO THE FINISHED GRADE. MOST PAVEMENT SUBBASE SOILS CAN BE USED TO REPLACE THE MATERIAL REQUIREMENTS OF LAYER 'C' OR 'D' AT THE SITE DESIGN ENGINEER'S DISCRETION.
5. WHERE RECYCLED CONCRETE AGGREGATE IS USED IN LAYERS 'A' OR 'B' THE MATERIAL SHOULD ALSO MEET THE ACCEPTABILITY CRITERIA OUTLINED IN TECHNICAL NOTE 6.20 "RECYCLED CONCRETE STRUCTURAL BACKFILL".

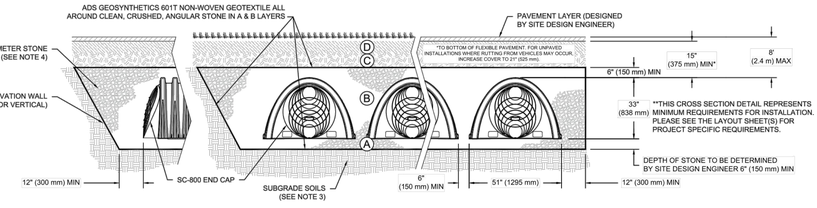

NOTES:

1. CHAMBERS SHALL MEET THE REQUIREMENTS OF ASTM F2418, "STANDARD SPECIFICATION FOR POLYPROPYLENE (PP) CORRUGATED WALL STORMWATER COLLECTION CHAMBERS".
2. SC-800 CHAMBERS SHALL BE DESIGNED IN ACCORDANCE WITH ASTM F2787 "STANDARD PRACTICE FOR STRUCTURAL DESIGN OF THERMOPLASTIC CORRUGATED WALL STORMWATER COLLECTION CHAMBERS".
3. THE SITE DESIGN ENGINEER IS RESPONSIBLE FOR ASSESSING THE BEARING RESISTANCE (ALLOWABLE BEARING CAPACITY) OF THE SUBGRADE SOILS AND THE DEPTH OF FOUNDATION STONE WITH CONSIDERATION FOR THE RANGE OF EXPECTED SOIL MOISTURE CONDITIONS.
4. PERIMETER STONE MUST BE EXTENDED HORIZONTALLY TO THE EXCAVATION WALL FOR BOTH VERTICAL AND SLOPED EXCAVATION WALLS.
5. REQUIREMENTS FOR HANDLING AND INSTALLATION:
   - TO MAINTAIN THE WIDTH OF CHAMBERS DURING SHIPPING AND HANDLING, CHAMBERS SHALL HAVE INTEGRAL, INTERLOCKING STACKING LUGS.
   - TO ENSURE A SECURE JOINT DURING INSTALLATION AND BACKFILL, THE HEIGHT OF THE CHAMBER JOINT SHALL NOT BE LESS THAN 2".
   - TO ENSURE THE INTEGRITY OF THE ARCH SHAPE DURING INSTALLATION, a) THE ARCH STIFFNESS CONSTANT AS DEFINED IN SECTION 6.2.8 OF ASTM F2418 SHALL BE GREATER THAN OR EQUAL TO 550 LBS/FT/%, AND b) TO RESIST CHAMBER DEFORMATION DURING INSTALLATION AT ELEVATED TEMPERATURES (ABOVE 73° F / 23° C), CHAMBERS SHALL BE PRODUCED FROM REFLECTIVE GOLD OR YELLOW COLORS.

1 SC-800 CROSS SECTION DETAIL

bhd ARCHITECTS
www.bhdarchitects.com
Phone 801.571.0010
Fax 801.571.0303
Toll Free 888.571.0010
65 East Wadsworth Park Drive
Suite 205 Draper, Utah 84020

PROFESSIONAL ENGINEER
08-19-24
NO. 14888926-2202
DANIEL J. CANNING
STATE OF UTAH

DRAWN: DC
CHECKED: N/A
DATE:
PROJECT #:
REV:
NOT TO SCALE

OREM VINEYARD YSA 3RD
VINEYARD, UT, USA

4640 TRUEMAN BLVD
HILLIARD, OH 43026
1-800-733-7473

StormTech® Chamber System
888-892-2694 | WWW.STORMTECH.COM

THIS DRAWING HAS BEEN PREPARED BASED ON INFORMATION PROVIDED TO ADS UNDER THE DIRECTION OF THE SITE DESIGN ENGINEER OR OTHER PROJECT REPRESENTATIVE. THE SITE DESIGN ENGINEER SHALL REVIEW THIS DRAWING PRIOR TO CONSTRUCTION. IT IS THE ULTIMATE RESPONSIBILITY OF THE SITE DESIGN ENGINEER TO ENSURE THAT THE PRODUCT(S) DEPICTED AND ALL ASSOCIATED DETAILS MEET ALL APPLICABLE LAWS, REGULATIONS, AND PROJECT REQUIREMENTS.

SHEET
1 OF 1

THE CHURCH OF JESUS CHRIST OF LATTER-DAY SAINTS

Orem YSA 3rd 10 Ward Building
Orem UT YSA 3rd Stake

Approx. 1700 West 575 South
Vineyard, Utah 84059

Date: 15 Aug 2024
BHD #: 2344
County Parcel: 57-226-0001
Plan Series: 2024 10 Ward SC
Owner #: 3PO-1876

Drawing Issue and Revision Schedule

#	Date	Description
1	15 Aug 2024	Bid Documents

Civil Details

C551

Printed: 19 Aug 2024 5:14 PM

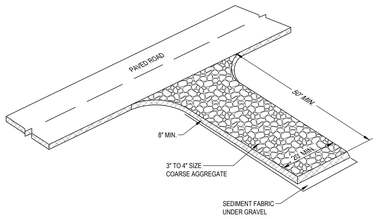

DESCRIPTION:
A STABILIZED PAD OF CRUSHED STONE LOCATED WHERE CONSTRUCTION TRAFFIC ENTERS OR LEAVES THE SITE FROM OR TO PAVED SURFACE.

APPLICATIONS:
AT ANY POINT OF INGRESS OR EGRESS AT A CONSTRUCTION SITE WHERE ADJACENT TRAVELED WAY IS PAVED. GENERALLY APPLIES TO SITES OVER 2 ACRES UNLESS SPECIAL CONDITIONS EXIST.

INSTALLATION/APPLICATION CRITERIA:
- CLEAR GRUB AREA AND GRAD TO PROVIDE MAXIMUM SLOPE OF 2%.
- COMPACT SUB GRADE AND PLACE FILTER FABRIC IF DESIRED (RECOMMENDED FOR ENTRANCES TO REMAIN FOR MORE THAN 3 MONTHS.
- PLACE COARSE AGGREGATE, 1 TO 2-1/2 INCHES IN SIZE, TO A MINIMUM DEPTH OF 8 INCHES.

LIMITATIONS:
- REQUIRES PERIODIC TOP DRESSING WITH ADDITIONAL STONES.
- SHOULD BE USED IN CONJUNCTION WITH STREET SWEEPING ON ADJACENT PUBLIC RIGHT-OF-WAY.

MAINTENANCE:
- INSPECT DAILY FOR LOSS OF GRAVEL OR SEDIMENT BUILDUP.
- INSPECT ADJACENT ROADWAY FOR SEDIMENT DEPOSIT AND CLEAN BY SWEEPING OR SHOVELING.
- REPAIR ENTRANCE AND REPLACE GRAVEL AS REQUIRED TO MAINTAIN CONTROL IN GOOD WORKING CONDITION.
- EXPAND STABILIZED AREA AS REQUIRED TO ACCOMMODATE TRAFFIC AND PREVENT EROSION AT DRIVEWAYS.

STABILIZED CONSTRUCTION ENTRANCE C1
SCALE: N.T.S.

OBJECTIVES
- ▪ HOUSEKEEPING PRACTICES
- □ CONTAIN WASTE
- □ MINIMIZE DISTURBED AREA
- □ STABILIZE DISTURBED AREA
- □ PROTECT SLOPES/CHANNELS
- ▪ CONTROL SITE PERIMETER
- □ CONTROL INTERNAL EROSION

TARGETED POLLUTANTS
- ■ SEDIMENT
- □ NUTRIENTS
- □ TOXIC MATERIALS
- □ OIL & GREASE
- □ FLOATABLE MATERIALS
- □ OTHER WASTE

- ■ HIGH IMPACT
- ▪ MEDIUM IMPACT
- □ LOW OR UNKNOWN IMPACT

IMPLEMENTATION REQUIREMENTS
- ■ CAPITAL COSTS
- ▪ O & M COSTS
- ▪ MAINTENANCE
- □ TRAINING

■ HIGH ▪ MEDIUM □ LOW

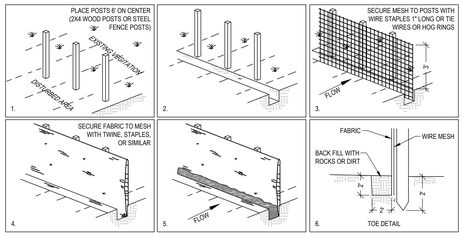

DESCRIPTION:
A TEMPORARY SEDIMENT BARRIER CONSISTING OF ENTRENCHED FILTER FABRIC STRETCHED ACROSS AND SECURED TO SUPPORTING POSTS.

APPLICATIONS:
- PERIMETER CONTROL: PLACER BARRIER AT DOWNGRADE LIMITS OF DISTURBANCE.
- SEDIMENT BARRIER: PLACE BARRIER AT TOE OF SLOPE OR SOIL STOCKPILE.
- PROTECTION OF EXISTING WATERWAYS: PLACE BARRIER AT TOP OF STREAM BANK
- INLET PROTECTION: PLACE FENCE SURROUNDING CATCH BASINS

INSTALLATION/APPLICATION CRITERIA:
- PLACE POSTS 6 FEET APART ON CENTER ALONG CONTOUR (OR USE PRE-ASSEMBLED UNIT) AND DRIVE 2 FEET MINIMUM INTO GROUND. EXCAVATE AN ANCHOR TRENCH IMMEDIATELY UPGRADIENT OF POSTS
- SECURE WIRE MESH (14 GAGE MIN. WITH 6 INCH OPENINGS) TO UPSLOPE SIDE OF POSTS. ATTACH WITH HEAVY DUTY 1 INCH LONG WIRE STAPLES, TIE WIRES OR HOG RINGS.
- CUT FABRIC TO REQUIRED WIDTH, UNROLL ALONG LENGTH OF BARRIER AND DRAPE OVER BARRIER. SECURE FABRIC TO MESH WITH TWINE, STAPLES, OR SIMILAR, WITH TRAILING EDGE EXTENDING INTO ANCHOR TRENCH.
- BACKFILL OVER FILTER FABRIC TO ANCHOR.

LIMITATIONS:
- RECOMMENDED MAXIMUM DRAINAGE AREA OF 0.5 ACRE PER 100 FEET OF FENCE.
- RECOMMENDED MAXIMUM UPGRADIENT SLOPE LENGTH OF 150 FEET.
- RECOMMENDED MAXIMUM UPHILL GRADE OF 2:1 (50%).
- RECOMMENDED MAXIMUM FLOW RATE OF 0.5 CFS.
- PONDING SHOULD NOT BE ALLOWED BEHIND FENCE.

MAINTENANCE:
- INSPECT IMMEDIATELY AFTER ANY RAINFALL AND AT LEAST DAILY DURING PROLONGED RAINFALL.
- LOOK FOR RUNOFF BYPASSING ENDS OF BARRIERS OR UNDERCUTTING BARRIERS.
- REPAIR OR REPLACE DAMAGED AREAS OF THE BARRIER AND REMOVE ACCUMULATED SEDIMENT.
- REANCHOR FENCE AS NECESSARY TO PREVENT SHORTCUTTING.
- REMOVE ACCUMULATED SEDIMENT WHEN IT REACHES 1/2 THE HEIGHT OF THE FENCE.

SILT FENCE C3
SCALE: N.T.S.

OBJECTIVES
- □ HOUSEKEEPING PRACTICES
- □ CONTAIN WASTE
- □ MINIMIZE DISTURBED AREA
- □ STABILIZE DISTURBED AREA
- □ PROTECT SLOPES/CHANNELS
- ▪ CONTROL SITE PERIMETER
- ▪ CONTROL INTERNAL EROSION

TARGETED POLLUTANTS
- ■ SEDIMENT
- □ NUTRIENTS
- □ TOXIC MATERIALS
- □ OIL & GREASE
- □ FLOATABLE MATERIALS
- □ OTHER WASTE

- ■ HIGH IMPACT
- ▪ MEDIUM IMPACT
- □ LOW OR UNKNOWN IMPACT

IMPLEMENTATION REQUIREMENTS
- ▪ CAPITAL COSTS
- ▪ O & M COSTS
- ▪ MAINTENANCE
- □ TRAINING

■ HIGH ▪ MEDIUM □ LOW

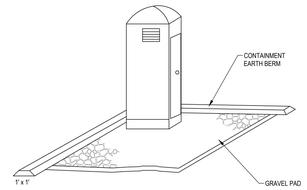

DESCRIPTION:
TEMPORARY ON-SITE SANITARY FACILITIES FOR CONSTRUCTION PERSONNEL.

APPLICATIONS:
- ALL SITES WITH NO PERMANENT SANITARY FACILITIES OR WHERE PERMANENT FACILITY IS TO FAR FROM ACTIVITIES.

INSTALLATION/APPLICATION CRITERIA:
- LOCATE PORTABLE TOILETS IN CONVENIENT LOCATIONS THROUGHOUT THE SITE.
- PREPARE LEVEL, GRAVEL SURFACE AND PROVIDE CLEAR ACCESS TO THE TOILETS FOR SERVICING AND FOR ON-SITE PERSONNEL.
- CONSTRUCT EARTH BERM PERIMETER (SEE EARTH BERM BARRIER INFORMATION SHEET), CONTROL FOR SPILL/PROTECTION LEAK.

LIMITATIONS:
- NO LIMITATIONS

MAINTENANCE:
- PORTABLE TOILETS SHOULD BE MAINTAINED IN GOOD WORKING ORDER BY LICENSED SERVICE WITH DAILY OBSERVATION FOR LEAK DETECTION.
- REGULAR WASTE COLLECTION SHOULD BE ARRANGED WITH LICENSED SERVICE.
- ALL WASTE SHOULD BE DEPOSITED IN SANITARY SEWER SYSTEM FOR TREATMENT WITH APPROPRIATE AGENCY APPROVAL.

PORTABLE TOILETS C5
SCALE: N.T.S.

OBJECTIVES
- ▪ HOUSEKEEPING PRACTICES
- ▪ CONTAIN WASTE
- □ MINIMIZE DISTURBED AREA
- □ STABILIZE DISTURBED AREA
- □ PROTECT SLOPES/CHANNELS
- □ CONTROL SITE PERIMETER
- □ CONTROL INTERNAL EROSION

TARGETED POLLUTANTS
- □ SEDIMENT
- □ NUTRIENTS
- □ TOXIC MATERIALS
- □ OIL & GREASE
- □ FLOATABLE MATERIALS
- ■ OTHER WASTE

- ■ HIGH IMPACT
- ▪ MEDIUM IMPACT
- □ LOW OR UNKNOWN IMPACT

IMPLEMENTATION REQUIREMENTS
- ▪ CAPITAL COSTS
- ▪ O & M COSTS
- ▪ MAINTENANCE
- □ TRAINING

■ HIGH ▪ MEDIUM □ LOW

FILTERSOCK SPECIFICATION:

FILTREXX FILTERSOCK INSTALLATION AND MAINTENANCE

1.0 DESCRIPTION:
THIS WORK SHALL CONSIST OF FURNISHING, INSTALLING, MAINTAINING AND DISPERSING (IF NEEDED) A WATER PERMEABLE COMPOST FILTER SOCK (FILTREXX FILTERSOCK) TO CONTAIN SOIL EROSION AND SEDIMENT BY REMOVING SOIL PARTICLES FROM WATER MOVING OFF SITE INTO ADJACENT WATERWAYS OR STORM WATER DRAINAGE SYSTEMS. FILTERSOCKS WILL BE USED AS A FORM OF INLET PROTECTION FOR OPERATIONAL STORM DRAINAGE SYSTEMS.

2.0 COMPOST PRODUCTS USED TO FILL FILTREXX FILTERSOCKS
1. COMPOST: COMPOST USED FOR FILTREXX FILTERSOCKS SHALL BE WEED FREE AND DERIVED FROM A WELL-DECOMPOSED SOURCE OF ORGANIC MATTER. THE COMPOST SHALL BE PRODUCED USING AN AEROBIC COMPOSTING PROCESS MEETING CFR 503 REGULATIONS, INCLUDING TIME AND TEMPERATURE DATA INDICATING EFFECTIVE WEED SEED, PATHOGEN AND INSECT LARVAE KILL. THE COMPOST SHALL BE FREE OF ANY REFUSE, CONTAMINANTS OR OTHER MATERIALS TOXIC TO PLANT GROWTH. NON-COMPOSTED PRODUCTS WILL NOT BE ACCEPTED. TEST METHODS FOR THE ITEMS BELOW SHOULD FOLLOW USCC TMECC GUIDELINES FOR LABORATORY PROCEDURES:
   A. PH - 6.0-8.0 IN ACCORDANCE WITH TMECC 04.11-A, "ELECTROMETRIC PH DETERMINATIONS FOR COMPOST"
   B. PARTICLE SIZE - 99% PASSING A 1" SIEVE, 90% PASSING A _" SIEVE AND A MINIMUM OF 70% GREATER THAN THE 3/8" SIEVE. A TOTAL OF 98 % SHALL NOT EXCEED 3 INCHES IN LENGTH, IN ACCORDANCE WITH TMECC 02.02-B, "SAMPLE SIEVING FOR AGGREGATE SIZE CLASSIFICATION"
   C. MOISTURE CONTENT OF LESS THAN 60% IN ACCORDANCE WITH STANDARDIZED TEST METHODS FOR MOISTURE DETERMINATION.
   D. MATERIAL SHALL BE RELATIVELY FREE (<1% BY DRY WEIGHT) OF INERT OR FOREIGN MAN MADE MATERIALS. E. A SAMPLE SHALL BE SUBMITTED TO THE ENGINEER FOR APPROVAL PRIOR TO BEING USED AND MUST COMPLY WITH ALL LOCAL, STATE AND FEDERAL REGULATIONS.

3.0 CONSTRUCTION AND INSTALLATION OF FILTREXX FILTERSOCKS:
1. FILTREXX FILTERSOCKS WILL BE USED AS A FORM OF INLET PROTECTION ON CONSTRUCTION SITES WHICH REQUIRE PROTECTION AGAINST SEDIMENT LADEN WATER AFTER STORM DRAINS BECOME OPERATIONAL.
2. FILTREXX FILTERSOCKS WILL BE PLACED AT LOCATIONS INDICATED ON PLANS AS DIRECTED BY THE ENGINEER. FILTERSOCKS SHOULD BE INSTALLED IN A PATTERN THAT ALLOWS COMPLETE PROTECTION OF THE INLET AREA.
3. INSTALLATION OF FILTREXX FILTERSOCKS WILL ENSURE A MINIMAL OVERLAP OF AT LEAST ONE FOOT ON EITHER SIDE OF THE OPENING BEING PROTECTED. THE FILTERSOCKS WILL BE ANCHORED TO THE SOIL BEHIND THE CURB USING STAPLES, STAKES OR OTHER DEVICES CAPABLE OF HOLDING THE FILTERSOCK IN PLACE.
4. STANDARD SIZES OF FILTERSOCKS FOR INLET PROTECTION WILL BE 8" DIAMETER PRODUCTS. IN SEVERE FLOW SITUATIONS, LARGER FILTERSOCKS MAY BE RECOMMENDED BY THE ENGINEER.
5. FILTERSOCKS SHALL BE CONSTRUCTED OF A WOVEN MATERIAL AND FILLED WITH A COMPOST PRODUCT THAT PASSES THE CRITERIA LISTED IN SECTION 2.
6. IF THE FILTERSOCKS BECOME CLOGGED WITH DEBRIS AND SEDIMENT, THEY SHALL BE MAINTAINED SO AS TO ASSURE A PROPER DRAINAGE AND WATER FLOW INTO THE STORM DRAIN. IN SEVERE STORM EVENTS, OVERFLOW OF THE FILTERSOCK MAY BE ACCEPTABLE IN ORDER TO KEEP THE AREA FROM FLOODING.
7. THE FILTERSOCKS SHALL BE POSITIONED SO AS TO PROVIDE COMPLETE PHYSICAL BARRIER TO THE DRAIN ITSELF, ALLOWING SEDIMENT TO COLLECT ON THE OUTSIDE OF THE FILTERSOCKS. SEE ATTACHED SCHEMATIC FOR FILTREXX FILTERSOCK INSTALLATION.
8. FOR AREAS WHERE FILTERSOCKS ARE TO BE LEFT AS A PERMANENT PART OF THE LANDSCAPE, FILTERSOCKS MAY BE SEEDED DURING TIME OF MANUFACTURE TO CREATE A LIVING SOCK. FOR SEEDING OPTIONS, THE ENGINEER MAY SIMPLY REPLACE ALL LANGUAGE ABOVE WITH "LIVING FILTREXX FILTERSOCKS"

4.0 MAINTENANCE:
1. THE CONTRACTOR SHALL MAINTAIN FILTREXX FILTERSOCKS IN A FUNCTIONAL CONDITION AT ALL TIMES AND IT SHALL BE ROUTINELY INSPECTED.
2. WHERE THE FILTERSOCK REQUIRES REPAIR, IT WILL BE ROUTINELY REPAIRED.
3. THE CONTRACTOR SHALL REMOVE SEDIMENTS COLLECTED AT THE BASE OF THE FILTERSOCK WHEN THEY REACH 1/3 OF THE EXPOSED HEIGHT OF THE FILTERSOCK, OR AS DIRECTED BY THE ENGINEER.
4. THE FILTREXX FILTERSOCK WILL BE DISPERSED ON SITE WHEN NO LONGER REQUIRED, AS DETERMINED BY THE ENGINEER. THE NETTING MATERIAL WILL BE DISPOSED OF IN NORMAL TRASH CONTAINERS OR REMOVED BY THE CONTRACTOR.
5. REGULAR MAINTENANCE INCLUDES LIFTING THE FILTREXX FILTERSOCKS AND CLEANING UNDER THEM AS SEDIMENT COLLECTS.

5.0 METHOD OF MEASUREMENT:
BID ITEMS SHALL SHOW MEASUREMENT AS 'FILTREXX FILTERSOCK' PER LINEAR FOOT, INSTALLED OR PER INLET, AS SPECIFIED BY THE ENGINEER.

6.0 PERFORMANCE:
1. CONTRACTOR IS RESPONSIBLE FOR ESTABLISHING A WORKING EROSION CONTROL SYSTEM AND MAY, WITH APPROVAL OF THE ENGINEER, WORK OUTSIDE THE MINIMUM CONSTRUCTION REQUIREMENTS AS NEEDED.
2. WHERE THE FILTERSOCK DETERIORATES OR FAILS, IT WILL BE REPAIRED OR REPLACED WITH A MORE EFFECTIVE ALTERNATIVE.
3. CONTRACTOR IS REQUIRED TO BE A CERTIFIED FILTREXX INSTALLER AS DETERMINED BY FILTREXX INTERNATIONAL, LLC (440-926-8041 OR VISIT WEBSITE AT FILTREXX.COM). CERTIFICATION SHALL BE CONSIDERED CURRENT IF APPROPRIATE IDENTIFICATION IS SHOWN DURING TIME OF BID OR AT TIME OF APPLICATION.

7.0 APPLICATION GUIDELINES:
1. FILTREXX FILTERSOCKS SHALL EITHER BE MADE ON SITE OR DELIVERED TO THE JOBSITE USING A 3 MIL TUBULAR HDPE KNITTED MESH NETTING MATERIAL, FILLED WITH COMPOST PASSING THE ABOVE SPECIFICATIONS FOR COMPOST PRODUCTS AS OUTLINED IN 2.0.
2. FILTREXX FILTERSOCKS NETTING MATERIALS ARE AVAILABLE ONLY FROM FILTREXX INTERNATIONAL, LLC AND ARE THE ONLY CERTIFIED MESH MATERIALS ACCEPTED IN CREATING FILTREXX PRODUCTS ON SITE OR AS DELIVERED TO THE JOB SITE. STANDARD FILTREXX COLOR CODING SYSTEMS INCLUDE 'YELLOW AND BLACK STRIPED MESH NETTING WITH 3/8" MESH OPENINGS FOR INLET PROTECTION. OTHER COLORS ARE ONLY ACCEPTABLE AS APPROVED BY BOTH THE ENGINEER AND FILTREXX INTERNATIONAL, LLC.
3. CONTRACTOR IS REQUIRED TO BE A CERTIFIED FILTREXX INSTALLER AS DETERMINED BY FILTREXX INTERNATIONAL, LLC (440-926-8041 OR VISIT WEBSITE AT FILTREXX.COM). CERTIFICATION SHALL BE CONSIDERED CURRENT IF APPROPRIATE IDENTIFICATION IS SHOWN DURING TIME OF BID OR AT TIME OF APPLICATION.

8.0 AVAILABLE VENDORS FILTREXX FILTERSOCKS MAY BE PURCHASED FROM THE FOLLOWING CERTIFIED FILTREXX INSTALLERS:

WINDSWEPT ORGANIX INC.
WORK: 480-963-4638
FAX: 408-940-4261
860 SOUTH BOGLE AVE., SUITE 2
CHANDLER, AZ 85225

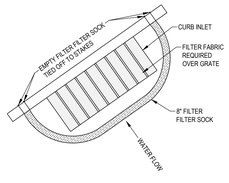

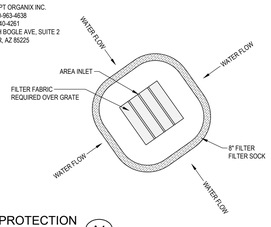

SEDIMENT BARRIER / FILTER SOCK PROTECTION A1
SCALE: N.T.S. Ⓒ REPLENISH

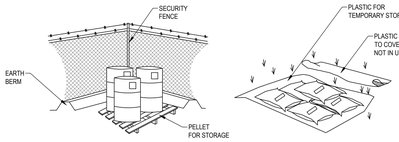

- ← CONTROLLED STORAGE LOCATION
- ← BERMED PERIMETER IMPOUNDMENT
- ← STORAGE OFF GROUND
- ← COVER WHEN NOT IN USE

DESCRIPTION:
CONTROLLED STORAGE OF ON-SITE MATERIALS.

APPLICATIONS:
- STORAGE OF HAZARDOUS, TOXIC, AND ALL CHEMICAL SUBSTANCES.
- ANY CONSTRUCTION SITE WITH OUTSIDE STORAGE OF MATERIALS.

INSTALLATION/APPLICATION CRITERIA:
- DESIGNATE A SECURED AREA WITH LIMITED ACCESS AS THE STORAGE LOCATION. ENSURE NO WATERWAYS OR DRAINAGE PATHS ARE NEARBY.
- CONSTRUCT COMPACTED EARTHEN BERM (SEE EARTH BERM BARRIER INFORMATION SHEET), OR SIMILAR PERIMETER CONTAINMENT AROUND STORAGE LOCATION FOR IMPOUNDMENT IN THE CASE OF SPILLS.
- ENSURE ALL ON-SITE PERSONNEL UTILIZE DESIGNATED STORAGE AREA. DO NOT STORE EXCESSIVE AMOUNTS OF MATERIAL THAT WILL NOT BE UTILIZED ON SITE.
- FOR ACTIVE USE OF MATERIAL AWAY FROM THE STORAGE AREA ENSURE MATERIALS ARE NOT SET DIRECTLY ON THE GROUND AND ARE COVERED WHEN NOT IN USE. PROTECT STORM DRAINAGE DURING USE.

LIMITATIONS:
- DOES NOT PREVENT CONTAMINATION DUE TO MISHANDLING OF PRODUCTS.
- SPILL PREVENTION AND RESPONSE PLAN STILL REQUIRED.
- ONLY EFFECTIVE IF MATERIALS ARE ACTIVELY STORED IN CONTROLLED LOCATION.

MAINTENANCE:
- INSPECT DAILY AND REPAIR ANY DAMAGE TO PERIMETER IMPOUNDMENT OR SECURITY FENCING.
- CHECK MATERIALS ARE BEING CORRECTLY STORED (I.E. STANDING UPRIGHT, IN LABELED CONTAINERS, TIGHTLY CAPPED) AND THAT NO MATERIALS ARE BEING STORED AWAY FROM THE DESIGNATED LOCATION.

MATERIALS STORAGE A3
SCALE: N.T.S.

OBJECTIVES
- ▪ HOUSEKEEPING PRACTICES
- ▪ CONTAIN WASTE
- □ MINIMIZE DISTURBED AREA
- □ STABILIZE DISTURBED AREA
- □ PROTECT SLOPES/CHANNELS
- □ CONTROL SITE PERIMETER
- □ CONTROL INTERNAL EROSION

TARGETED POLLUTANTS
- □ SEDIMENT
- □ NUTRIENTS
- ▪ TOXIC MATERIALS
- □ OIL & GREASE
- □ FLOATABLE MATERIALS
- ▪ OTHER WASTE

- ■ HIGH IMPACT
- ▪ MEDIUM IMPACT
- □ LOW OR UNKNOWN IMPACT

IMPLEMENTATION REQUIREMENTS
- ▪ CAPITAL COSTS
- ▪ O & M COSTS
- ▪ MAINTENANCE
- ■ TRAINING

■ HIGH ▪ MEDIUM □ LOW

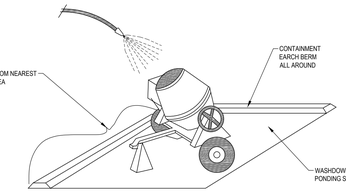

DESCRIPTION:
PREVENT OR REDUCE THE DISCHARGE OF POLLUTANTS TO STORM WATER FROM CONCRETE WASTE BY CONDUCTING WASHOUT OFF-SITE, PERFORMING ON-SITE WASHOUT IN A DESIGNATED AREA, AND TRAINING EMPLOYEES AND SUBCONTRACTORS.

APPLICATIONS:
- THIS TECHNIQUE IS APPLICABLE TO ALL TYPES OF SITES.

INSTALLATION/APPLICATION CRITERIA:
- STORE DRY AND WET MATERIALS UNDER COVER, AWAY FROM DRAINAGE AREAS.
- AVOID MIXING EXCESS AMOUNTS OF FRESH CONCRETE OR CEMENT ON-SITE.
- PERFORM WASHOUT OF CONCRETE TRUCKS OFF-SITE OR IN DESIGNATED AREAS ONLY.
- DO NOT WASH OUT CONCRETE TRUCKS INTO STORM DRAINS, OPEN DITCHES, STREETS, OR STREAMS.
- DO NOT ALLOW EXCESS CONCRETE TO BE DUMPED ON-SITE, EXCEPT IN DESIGNATED AREAS.
- WHEN WASHING CONCRETE TO REMOVE FINE PARTICLES AND EXPOSE THE AGGREGATE, AVOID CREATING RUNOFF BY DRAINING THE WATER WITHIN A BERMED OR LEVEL AREA (SEE EARTH BERM BARRIER INFORMATION SHEET.)
- TRAIN EMPLOYEES AND SUBCONTRACTORS IN PROPER CONCRETE WASTE MANAGEMENT.

LIMITATIONS:
- OFF-SITE WASHOUT OF CONCRETE WASTES MAY NOT ALWAYS BE POSSIBLE.

MAINTENANCE:
- INSPECT SUBCONTRACTORS T ENSURE THAT CONCRETE WASTES ARE BEING PROPERLY MANAGED.
- IF USING A TEMPORARY PIT, DISPOSE HARDENED CONCRETE ON A REGULAR BASIS.

CONCRETE WASTE MANAGEMENT A5
SCALE: N.T.S.

OBJECTIVES
- ▪ HOUSEKEEPING PRACTICES
- ▪ CONTAIN WASTE
- □ MINIMIZE DISTURBED AREA
- □ STABILIZE DISTURBED AREA
- □ PROTECT SLOPES/CHANNELS
- □ CONTROL SITE PERIMETER
- □ CONTROL INTERNAL EROSION

TARGETED POLLUTANTS
- □ SEDIMENT
- □ NUTRIENTS
- □ TOXIC MATERIALS
- □ OIL & GREASE
- □ FLOATABLE MATERIALS
- ▪ OTHER WASTE

- ■ HIGH IMPACT
- ▪ MEDIUM IMPACT
- □ LOW OR UNKNOWN IMPACT

IMPLEMENTATION REQUIREMENTS
- □ CAPITAL COSTS
- □ O & M COSTS
- ▪ MAINTENANCE
- ▪ TRAINING

■ HIGH ▪ MEDIUM □ LOW

bhd ARCHITECTS
www.bhdarchitects.com
Phone 801.571.0010
Fax 801.571.0303
Toll Free 888.571.0010
65 East Wadsworth Park Drive
Suite 205 Draper, Utah 84020

PROFESSIONAL ENGINEER
68-19-24
No. 14888925-2202
DANIEL J. CANNING
STATE OF UTAH

THE CHURCH OF JESUS CHRIST OF LATTER-DAY SAINTS

Orem YSA 3rd 10 Ward Building
Orem UT YSA 3rd Stake
Approx. 1700 West 575 South
Vineyard, Utah 84059

Owner #: 590-1876
Plan Series: 2024 10 Ward GC
County Parcel: 37:220:0001
BHD #: 2344
Date: 15 Aug 2024

Drawing Issue and Revision Schedule

No.	Description	Date
1	15 Aug 2024 Bid Documents	

Civil Details

C571

Printed: 19 Aug 2024 5:14 PM

GENERAL NOTES

1.1 COMPLIANCE

1. ALL WORK TO CONFORM TO GOVERNING MUNICIPALITY'S STANDARDS, SPECIFICATIONS AND REQUIREMENTS.
2. ALL CONSTRUCTION AND MATERIALS SHALL BE IN ACCORDANCE WITH THESE CONTRACT DOCUMENTS AND THE MOST RECENT, ADOPTED EDITIONS OF THE FOLLOWING: INTERNATIONAL BUILDING CODE (IBC), THE INTERNATIONAL PLUMBING CODE, STATE DRINKING WATER REGULATIONS, APWA MANUAL OF STANDARD PLANS AND SPECIFICATIONS, ADA ACCESSIBILITY GUIDELINES.
3. ALL CONSTRUCTION SHALL BE AS SHOWN ON THESE PLANS. ANY REVISIONS MUST HAVE PRIOR WRITTEN APPROVAL.

1.2 PERMITTING AND INSPECTIONS

1. PRIOR TO STARTING CONSTRUCTION, THE CONTRACTOR SHALL BE RESPONSIBLE FOR MAKING SURE THAT ALL REQUIRED PERMITS AND APPROVALS HAVE BEEN OBTAINED. NO CONSTRUCTION OR FABRICATION SHALL BEGIN UNTIL THE CONTRACTOR HAS RECEIVED THOROUGHLY REVIEWED PLANS AND OTHER DOCUMENTS APPROVED BY ALL OF THE PERMITTING AUTHORITIES.
2. CONTRACTOR IS RESPONSIBLE FOR SCHEDULING AND NOTIFYING ARCHITECTENGINEER OR INSPECTING AUTHORITY 48 HOURS IN ADVANCE OF COVERING UP ANY PHASE OF CONSTRUCTION REQUIRING OBSERVATION.
3. ANY WORK IN THE PUBLIC RIGHT-OF-WAY WILL REQUIRE PERMITS FROM THE APPROPRIATE, CITY, COUNTY OR STATE AGENCY CONTROLLING THE ROAD AND WITH APPROPRIATE INSPECTIONS.

1.3 COORDINATION & VERIFICATION

1. ALL DIMENSIONS, GRADES & UTILITY DESIGNS SHOWN ON THE PLANS SHALL BE VERIFIED BY THE CONTRACTOR PRIOR TO CONSTRUCTION. CONTRACTOR SHALL NOTIFY ARCHITECTENGINEER OF ANY DISCREPANCIES PRIOR TO PROCEEDING WITH CONSTRUCTION FOR NECESSARY PLAN OR GRADE CHANGES. NO EXTRA COMPENSATION SHALL BE PAID TO THE CONTRACTOR FOR WORK HAVING TO BE REDONE DUE TO DIMENSIONS OR GRADES SHOWN INCORRECTLY ON THESE PLANS, IF NOT VERIFIED AND NOTIFICATION OF CONFLICTS HAVE NOT BEEN BROUGHT TO THE ATTENTION OF THE ARCHITECTENGINEER.
2. CONTRACTOR MUST VERIFY ALL EXISTING CONDITIONS BEFORE BIDDING AND BRING UP ANY QUESTIONS BEFOREHAND. NO ALLOWANCE WILL BE MADE FOR DISCREPANCIES OR OMISSIONS THAT CAN BE EASILY OBSERVED.
3. CONTRACTOR TO COORDINATE WITH ALL OTHER DISCIPLINES, INCLUDING BUT NOT LIMITED TO: LANDSCAPE PLANS, SITE ELECTRICAL SITE LIGHTING PLANS AND ELECTRICAL SERVICE TO THE BUILDING(S), MECHANICAL PLANS FOR LOCATION OF SERVICES TO THE BUILDING(S), INCLUDING FIRE PROTECTION, ARCHITECTURAL SITE PLAN FOR DIMENSIONS, ACCESSIBLE ROUTES, ETC., NOT SHOWN ON CIVIL PLANS.
4. CONTRACTOR IS TO COORDINATE LOCATION OF NEW TELEPHONE SERVICE, GAS SERVICE, CABLE, ETC. TO BUILDING WITH THE APPROPRIATE UTILITY COMPANY. FOR TELEPHONE, CONTRACTOR TO FURNISH CONDUIT, PLYWOOD BACKBOARD, AND GROUND WIRE, AS REQUIRED.

1.4 SAFETY AND PROTECTION

1. CONTRACTOR IS SOLELY RESPONSIBLE FOR THE MEANS AND METHODS OF CONSTRUCTION.
2. CONTRACTOR IS RESPONSIBLE FOR THE SAFETY OF THE PROJECT AND SHALL MEET ALL OSHA REQUIREMENTS.
3. CONTRACTOR IS RESPONSIBLE FOR CONFORMING TO LOCAL AND FEDERAL CODES GOVERNING SHORING AND BRACING OF EXCAVATIONS AND TRENCHES, AND FOR THE PROTECTION OR WORKERS AND PUBLIC.
4. CONTRACTOR SHALL TAKE ALL MEASURES NECESSARY TO PROTECT ALL EXISTING PUBLIC AND PRIVATE PROPERTY: ROADWAYS, AND UTILITY IMPROVEMENTS. DAMAGE TO EXISTING IMPROVEMENTS CAUSED BY THE CONTRACTOR MUST BE REPAIRED BY THE CONTRACTOR AT HIS/HER EXPENSE TO THE SATISFACTION OF THE OWNER OF SAID IMPROVEMENTS.
5. CONTRACTOR IS REQUIRED TO KEEP ALL CONSTRUCTION ACTIVITIES WITHIN THE APPROVED PROJECT LIMITS. THIS INCLUDES, BUT IS NOT LIMITED TO, VEHICLE AND EQUIPMENT STAGING, MATERIAL STORAGE AND LIMITS OF TRENCH EXCAVATION.
6. IT IS THE CONTRACTOR'S RESPONSIBILITY TO OBTAIN PERMISSION AND/OR EASEMENTS FROM THE APPROPRIATE GOVERNMENT AGENCY AND/OR INDIVIDUAL PROPERTY OWNER(S) FOR WORK OR STAGING OUTSIDE OF THE PROJECT LIMITS.
7. CONTRACTOR SHALL PROVIDE BARRICADES, SIGNS, FLASHERS, OTHER EQUIPMENT AND FLAG PERSONS NECESSARY TO INSURE THE SAFETY OF WORKERS AND VISITORS. ALL CONSTRUCTION SIGNING, BARRICADING, AND TRAFFIC DELINEATION SHALL CONFORM TO THE "MANUAL ON UNIFORM TRAFFIC CONTROL DEVICES", LATEST EDITION.
8. CONTRACTOR SHALL COMPLY WITH LOCAL NOISE ORDINANCE STANDARDS.
9. CONTRACTOR IS RESPONSIBLE FOR DUST CONTROL ACCORDING TO GOVERNING AGENCY STANDARDS.
10. CONTRACTOR SHALL TAKE ALL NECESSARY AND PROPER PRECAUTIONS TO PROTECT ADJACENT PROPERTIES FROM ANY AND ALL DAMAGE THAT MAY OCCUR FROM STORM WATER RUNOFF AND/OR DEPOSITION OF DEBRIS RESULTING FROM ANY AND ALL WORK IN CONNECTION WITH CONSTRUCTION. SUBMIT A STORM WATER POLLUTION PREVENTION PLAN, IF REQUIRED.
11. WORK IN PUBLIC STREETS, ONCE BEGUN, SHALL BE PROSECUTED TO COMPLETION WITHOUT DELAY AS TO PROVIDE MINIMUM INCONVENIENCE TO ADJACENT PROPERTY OWNERS AND TO THE TRAVELING PUBLIC.
12. CONTRACTOR SHALL PROVIDE ALL NECESSARY HORIZONTAL AND VERTICAL TRANSITIONS BETWEEN NEW CONSTRUCTION AND EXISTING SURFACES TO PROVIDE FOR PROPER DRAINAGE AND FOR INGRESS AND EGRESS TO NEW CONSTRUCTION.
13. NATURAL VEGETATION AND SOIL COVER SHALL NOT BE DISTURBED PRIOR TO ACTUAL CONSTRUCTION OF A REQUIRED FACILITY OR IMPROVEMENT. MASS CLEARING OF THE SITE IN ANTICIPATION OF CONSTRUCTION SHALL BE AVOIDED. CONSTRUCTION TRAFFIC SHALL BE LIMITED TO ONE APPROACH TO THE SITE. THE APPROACH SHALL BE DESIGNATED BY THE OWNER OR GOVERNING AGENCY.
14. THE CONTRACTOR SHALL TAKE REASONABLE MEASURE TO PROTECT EXISTING IMPROVEMENTS FROM DAMAGE AND ALL SUCH IMPROVEMENTS DAMAGED BY THE CONTRACTOR'S OPERATION SHALL BE REPAIRED OR RECONSTRUCTED TO THE ENGINEER/OWNER'S SATISFACTION AT THE EXPENSE OF THE CONTRACTOR.

1.5 GRADING / SOILS

1. CONTRACTOR SHALL SUBMIT A COMPACTION REPORT PREPARED BY A QUALIFIED REGISTERED SOILS ENGINEER, VERIFYING THAT ALL FILLED AREAS AND SUBGRADE AREAS WITH THE BUILDING PAD AREA AND AREAS TO BE PAVED, HAVE BEEN COMPACTED IN ACCORDANCE WITH THESE PLANS AND SPECIFICATIONS.
2. SITE CLEARING SHALL INCLUDE THE LOCATING AND REMOVAL OF ALL UNDERGROUND TANKS, PIPES, VALVES, ETC.
3. ALL EXISTING VALVES, MANHOLES, ETC. SHALL BE RAISED OR LOWERED TO GRADE AS REQUIRED.

1.6 UTILITIES

1. THE LOCATIONS OF UNDERGROUND FACILITIES SHOWN ON THESE PLANS ARE BASED ON FIELD SURVEYS AND LOCAL UTILITY COMPANY RECORDS. IT SHALL BE THE CONTRACTOR'S FULL RESPONSIBILITY TO CONTACT THE VARIOUS UTILITY COMPANIES EITHER DIRECT OR THROUGH BLUE STAKE TO LOCATE THEIR FACILITIES PRIOR TO STARTING CONSTRUCTION.
2. CONTRACTOR TO VERIFY BY POTHOLING BOTH THE VERTICAL AND HORIZONTAL LOCATION OF ALL EXISTING UTILITIES PRIOR TO INSTALLING ANY NEW LINES. NO ADDITIONAL COMPENSATION SHALL BE PAID TO THE CONTRACTOR FOR DAMAGE AND REPAIR TO THESE FACILITIES CAUSED BY HIS WORK FORCE.
3. CONTRACTOR MUST START AT LOW END OF ALL NEW GRAVITY UTILITY LINES. MECHANICAL SUB-CONTRACTOR MUST BE PROVIDED CIVIL SITE DRAWINGS FOR COORDINATION AND TO CHECK THE FLOW FROM THE LOWEST POINT IN BUILDING TO THE FIELD VERIFIED CONNECTION AT THE EXISTING MAIN. NO EXTRA COMPENSATION IS TO BE PAID TO THE CONTRACTOR FOR WORK HAVING TO BE REDONE DUE TO FAILURE TO COMPLY WITH THESE REQUIREMENTS.
4. CONTRACTOR IS TO VERIFY LOCATION, DEPTH, SIZE, TYPE, AND OUTSIDE DIAMETERS OF UTILITIES IN THE FIELD BY POTHOLING A MINIMUM OF 300 FEET AHEAD, PIPELINE CONSTRUCTION TO AVOID CONFLICTS WITH DESIGNED PIPELINE GRADE AND ALIGNMENT. EXISTING UTILITY INFORMATION SHOWN ON PLANS OR OBTAINED FROM UTILITY COMPANIES OR BLUE STAKED MUST BE ASSUMED AS APPROXIMATE, REQUIRING FIELD VERIFICATION.
5. CULINARY WATER AND FIRE SERVICE LINES TO BE CONSTRUCTED IN ACCORDANCE WITH LOCAL GOVERNING MUNICIPALITY STANDARDS AND SPECIFICATIONS.
6. SANITARY SEWER MAINS AND LATERALS TO BE CONSTRUCTED IN ACCORDANCE WITH LOCAL GOVERNING MUNICIPALITY SEWER DISTRICT STANDARDS AND SPECIFICATIONS.
7. STORM SEWER TO BE CONSTRUCTED IN ACCORDANCE WITH THE GOVERNING MUNICIPALITY STANDARDS AND SPECIFICATIONS.
8. ALL STORM DRAIN AND IRRIGATION CONDUITS SHALL BE INSTALLED WITH WATER TIGHT JOINTS AND CONNECTIONS.
9. ALL STORM DRAIN PIPE PENETRATIONS INTO BOXES SHALL BE CONSTRUCTED WITH WATER TIGHT SEALS ON THE OUTSIDE AND GROUTED SMOOTH WITH A NON-SHRINK GROUT ON THE INSIDE. CONDUITS SHALL BE CUT OFF FLUSH WITH THE INSIDE OF THE BOX.
10. NO CHANGE IN THE DESIGN OF UTILITIES AS SHOWN WILL BE MADE BY THE CONTRACTOR WITHOUT THE WRITTEN APPROVAL OF THE GOVERNING MUNICIPALITY, OR OTHER AUTHORITY HAVING JURISDICTION OVER THAT UTILITY.
11. ALL STORM DRAIN CONDUITS AND BOXES SHALL BE CLEAN AND FREE OF ROCKS, DIRT, AND CONSTRUCTION DEBRIS PRIOR TO FINAL INSPECTION.

1.8 SURVEY CONTROL

1. CONTRACTOR MUST PROVIDE A REGISTERED LAND SURVEYOR OR PERSONS UNDER THE SUPERVISION OF A REGISTERED LAND SURVEYOR TO SET STAKES FOR THE ALIGNMENT AND GRADE OF EACH MAIN AND/OR FACILITY AS SHOWN ON THE PLANS. THE STAKES SHALL BE MARKED WITH THE HORIZONTAL LOCATION (STATION) AND VERTICAL LOCATION (GRADE) WITH CUTS AND/OR FILLS TO THE APPROVED GRADE OF THE MAIN AND OR FACILITY AS SHOWN ON THE PLANS.
2. THE CONTRACTOR SHALL PROTECT ALL STAKES AND MARKERS FOR VERIFICATION PURPOSES.
3. CONTRACTOR WILL BE RESPONSIBLE FOR FURNISHING, MAINTAINING, OR RESTORING ALL MONUMENTS AND REFERENCE MARKS WITHIN THE PROJECT SITE.

1.9 AMERICAN DISABILITIES ACT

1. PEDESTRIAN / ADA ROUTES SHALL MEET THE FOLLOWING SPECIFICATIONS:
   *ROUTES SHALL HAVE A 2.00% (1:50) MAXIMUM CROSS SLOPE.
   *ROUTES SHALL HAVE A 5.00% (1:20) MAXIMUM RUNNING SLOPE.
   *RAMPS SHALL HAVE A 8.33% (1:12) MAXIMUM RUNNING SLOPE.
2. ADA PARKING STALLS AND ADJACENT ROUTES SHALL HAVE A 2.00% (1:50) MAXIMUM SURFACE SLOPE IN ANY DIRECTION.
3. THE CONTRACTOR SHALL ADHERE TO THE ABOVE SPECIFICATIONS. IN THE EVENT OF A DISCREPANCY IN THE CONSTRUCTION DOCUMENTS, THE CONTRACTOR SHALL NOTIFY THE ARCHITECTENGINEER PRIOR TO ANY CONSTRUCTION.

LEGEND

NEW	EXISTING	
		MONUMENT LINE
		CENTER LINE
		SUBJECT PROPERTY LINE
		ADJACENT PROPERTY LINE
		EASEMENT LINE
		DITCH FLOWLINE
X	X	FENCE LINE
ATMS	atms	ATMS CABLE
TV	tv	CABLE TV LINE
C	c	COMMUNICATIONS LINE
FO	fo	FIBER-OPTIC CABLE
F	f	FIRE LINE
IRR	irr	IRRIGATION LINE
G	g	NATURAL GAS LINE
OHC	ohc	OVERHEAD COMMUNICATIONS
OHP	ohp	OVERHEAD POWER LINE
OHT	oht	OVERHEAD TELEPHONE LINE
OHTV	ohtv	OVERHEAD TELEVISION LINE
P	p	POWER LINE
P/C	p/c	POWER/COMMUNICATIONS LINE
P/T	p/t	POWER/TELEPHONE LINE
P/T/C	p/t/c	POWER/TELE/COMM LINE
RD	rd	ROOF DRAIN LINE
SW	sw	SECONDARY WATER LINE
S	s	SANITARY SEWER LINE
ST	st	STEAM LINE
SD	sd	STORM DRAIN LINE
T	t	TELEPHONE LINE
T/C	t/c	TELEPHONE/COMM LINE
UD	ud	UNDERDRAIN
UGC	ugc	UNDERGROUND COMMUNICATIONS
UGP	ugp	UNDERGROUND POWER LINE
UGT	ugt	UNDERGROUND TELEPHONE LINE
UGTV	ugtv	UNDERGROUND TELEVISION
W	w	WATER LINE
T2	ex2'	CONTOUR LINE
		CURB & GUTTER (STD)
		CURB & GUTTER (OUTFALL)
		CONCRETE PAVEMENT
		STD. DUTY ASPHALT
		HEAVY DUTY ASPHALT

NEW	EXISTING	
		SECTION CORNER (FOUND)
		SECTION CORNER (NOT FOUND)
		STREET MONUMENT
		BRASS CAP MONUMENT
		POWER POLE
		UTILITY POLE
GUY	GUY	GUY ANCHOR
TRANS	TRANS	POWER TRANSFORMER
		TRAFFIC SIGNAL CABINET
		LIGHT POLE
TR	TR	TELEPHONE RISER
T	T	TELEPHONE MANHOLE
		TRAFFIC SIGNAL BOX
W	W	WATER MANHOLE
		WATER VALVE
WM	WM	WATER METER
		FIRE HYDRANT
S	S	SANITARY SEWER MANHOLE
SSCO	SSCO	SANITARY SEWER CLEANOUT
SD	SD	STORM DRAIN MANHOLE
		STORM DRAIN CURB INLET
		STORM DRAIN CATCH BASIN
SD	SD	STORM DRAIN CLEANOUT
		STORM DRAIN COMBO BOX
MB	MB	MAILBOX
		SIGN
		FLOW DIRECTION
44.00 TOC	44.00 EX TOC	SPOT ELEVATION
		CONIFEROUS TREE
		DECIDUOUS TREE

ABBREVIATIONS

AC	ACRE	E	EAST	GV	GAS VALVE	PP	POWER POLE	TFC	TOP FACE OF CURB
ADA	AMERICANS WITH DISABILITIES ACT	EB	ELECTRIC BOX	HDPE	HIGH DENSITY POLYETHYLENE	PRC	POINT OF REVERSE CURVE	TL	TREE LINE
ATMS	ADVANCED TRAFFIC MGMT. SYSTEM	EGL	ENERGY GRADE LINE	HG	HEADGATE	PRK	PARKING STRIPE	TMH	TELEPHONE MANHOLE
B&C	BAR & CAP	ELEV	ELEVATION	HGL	HYDRAULIC GRADE LINE	POC	POINT OF CONNECTION	TOA	TOP OF ASPHALT
BC	BUILDING CORNER	EM	ELECTRIC METER	HP	HIGH POINT	PT	POINT OF TANGENCY	TOC	TOP OF CONCRETE
BLUE	BLUE STAKED ELECTRIC	EMH	ELECTRIC MANHOLE	HW	HEADWALL or HIGH WATER	PWR	POWER	TOE	TOE OF SLOPE
BLUFO	BLUE STAKED FIBER OPTIC	EOA	EDGE OF ASPHALT	HWY	HIGHWAY	PVC	POLYVINYL CHLORIDE PIPE	TOP	TOP OF SLOPE or TOP OF PIPE
BLUG	BLUE STAKED NATURAL GAS	EOC	EDGE OF CONCRETE	ICO	IRRIGATION CLEANOUT	R	RANGE	TOW	TOP OF WALK
BLUIRR	BLUE STAKED IRRIGATION	EOG	EDGE OF GRAVEL	ICV	IRRIGATION CONTROL VALVE	RCP	REINFORCED CONCRETE PIPE	TR	TELEPHONE RISER
BLUSD	BLUE STAKED STORM DRAIN	EOL	EDGE OF LAWN	IE	INVERT ELEVATION	RD	ROOF DRAIN	TV	TELEVISION
BLUSS	BLUE STAKED SANITARY SEWER	EX or EXIST	EXISTING	IRR	IRRIGATION	REV	REVISION	TW	TOP OF WALL
BLUT	BLUE STAKED TELEPHONE	F	FIRE	LF	LINEAR FEET	ROW	RIGHT-OF-WAY	TRANS	TRANSFORMER
BLUW	BLUE STAKED WATER	FC	FOUNDATION CORNER	LIP	LIP OF GUTTER	RR	RAILROAD	TSP	TRAFFIC SIGNAL POLE
BM	BENCHMARK	FD	FOUND	LP	LOW POINT or LIGHT POLE	S	SOUTH	TSB	TRAFFIC SIGNAL BOX
BOB	BOTTOM OF BOX	FDC	FIRE DEPT. CONNECTION	MAX	MAXIMUM	SAD	SEE ARCHITECTURAL DRAWINGS	UD	UNDERDRAIN
BOL	BOLLARD	FDMN	FOUND MONUMENT	MIN	MINIMUM	SD	STORM DRAIN	UGC	UNDERGROUND COMMUNICATIONS
BOV	BLOW-OFF VALVE	FDSC	FOUND SECTION CORNER	MON	MONUMENT	SDCB	STORM DRAIN CATCH BASIN	UGP	UNDERGROUND POWER
BOW	BACK OF WALK	FFE	FINISHED FLOOR ELEVATION	MP	METAL PIPE	SDCO	STORM DRAIN CLEOUNOUT BOX	UGT	UNDERGROUND TELEPHONE
BW	BOTTOM OF WALL	FG	FINISHED GRADE	MW	MONITORING WELL	SDMH	STORM DRAIN MANHOLE	UGTV	UNDERGROUND TELEVISION
℄	CENTERLINE	FH	FIRE HYDRANT	N	NORTH	SEC	SECTION	U.N.O.	UNLESS NOTED OTHERWISE
CATV	CABLE TELEVISION	FL	FLOW LINE	NG	NATURAL GROUND	SPECS	SPECIFICATIONS	UP	UTILITY POLE
CBR	CONCRETE BARRIER	FNC	FENCE	NGRET	NG AT RETAINING WALL	SLB&M	SALT LAKE BASE & MERIDIAN	VCP	VITRIFIED CLAY PIPE
CC	CURB CUT	FNCCL	CHAIN LINK FENCE	NR	NAIL & RIBBON	SQ	SQUARE	VP	VERTICAL PIPE
COL	COLUMN	FNCIRN	IRON FENCE	NW	NAIL & WASHER	SQFT	SQUARE FEET	W	WEST or WATER
COMM	COMMUNICATIONS	FNCVYL	VINYL FENCE	NTS	NOT TO SCALE	SQYD	SQUARE YARD	WM	WATER METER
CONC	CONCRETE	FNCWD	WOOD FENCE	OG	ORIGINAL GROUND	SS	SANITARY SEWER	WMH	WATER MANHOLE
CONST	CONSTRUCTION	FNCWR	WIRE FENCE	OH	OVERHANG	SSCO	SANITARY SEWER CLEANOUT	WS	WATER SURFACE
CMP	CORRUGATED METAL PIPE	FO	FIBER OPTIC	OHC	OVERHEAD COMMUNICATIONS	SSMH	SANITARY SEWER MANHOLE	WTR	WATER
CP	CONTROL POINT	FOW	FRONT OF WALK	OHP	OVERHEAD POWER	ST	STEAM	WV	WATER VALVE
CTREE	CONIFEROUS TREE	FT	FEET	OHT	OVERHEAD TELEPHONE	STA	STATION	WW	WATERWAY
CUFT	CUBIC FOOT	G	NATURAL GAS	OHTV	OVERHEAD TELEVISION	STD	STANDARD		
CUYD	CUBIC YARD	GAR	GARAGE	℄	PROPERTY LINE	STM	STORM		
DEL	DELINEATOR	GB	GRADE BREAK	PB	POWER BOX	SYL	SOLID YELLOW LINE		
DIA or Ø	DIAMETER	GL	GROUND LIGHT	PC	POINT OF CURVATURE	SWL	SOLID WHITE LINE		
DIP	DUCTILE IRON PIPE	GM	GAS METER	PCC	POINT OF COMPOUND CURVE	T	TOWNSHIP		
DTREE	DECIDUOUS TREE	GMH	GAS MANHOLE	PI	POINT OF INTERSECTION	TBC	TOP BACK OF CURB		
DYL	DOUBLE YELLOW LINE	GUY	GUY WIRE	PM	PARKING METER	TELE	TELEPHONE		

bhd ARCHITECTS
www.bhdarchitects.com
Phone 801.571.0010
Fax 801.571.0303
Toll Free 888.571.0010
65 East Wadsworth Park Drive
Suite 205 Draper, Utah 84020

PROFESSIONAL ENGINEER
08-19-24
REG. NO. 14998925-2202
DANIEL J. CANNING
STATE OF UTAH

THE CHURCH OF JESUS CHRIST OF LATTER-DAY SAINTS

Orem YSA 3rd 10 Ward Building
Orem UT YSA 3rd Stake

Approx. 1700 West 575 South
Vineyard, Utah 84059

Date: 15 Aug 2024
BHD #: 2344
County Parcel: 39:228:0001
Plan Series: 2024 10 Ward GC
Owner #: SPO-1876

Drawing Issue and Revision Schedule

#	Date	Description
1	15 Aug 2024	Bid Documents

Civil Notes

C601

Printed: 19 Aug 2024 5:15 PM

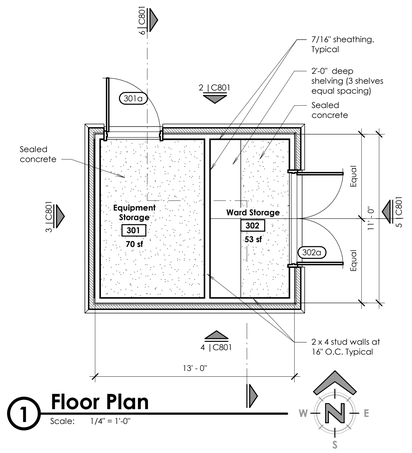

1 Floor Plan
Scale: 1/4" = 1'-0"

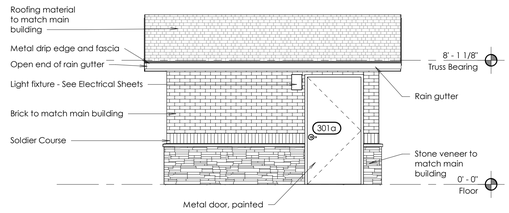

2 Building Elevation
Scale: 1/4" = 1'-0"

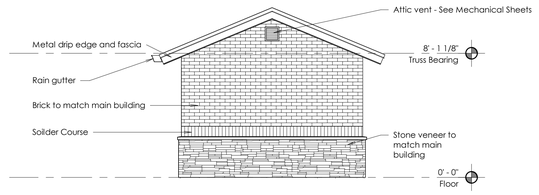

3 Building Elevation
Scale: 1/4" = 1'-0"

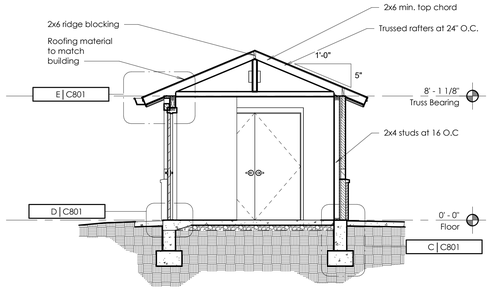

6 Section
Scale: 1/4" = 1'-0"

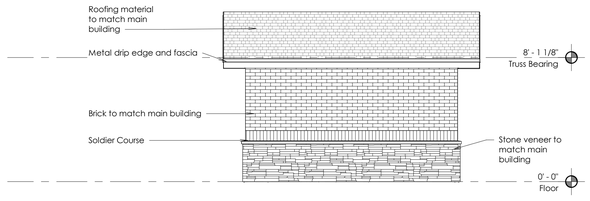

4 Building Elevation
Scale: 1/4" = 1'-0"

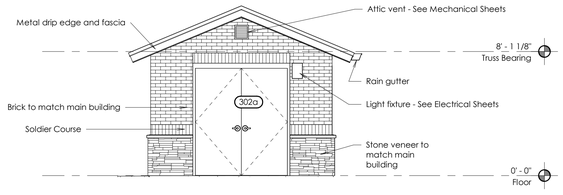

5 Building Elevation
Scale: 1/4" = 1'-0"

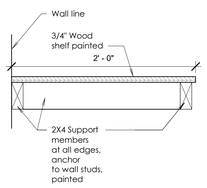

A Shelf Detail
Scale: 1 1/2" = 1'-0"

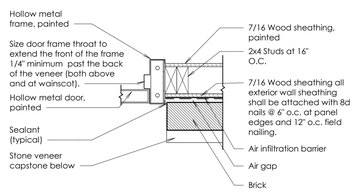

B Jamb Detail
Scale: 1 1/2" = 1'-0"

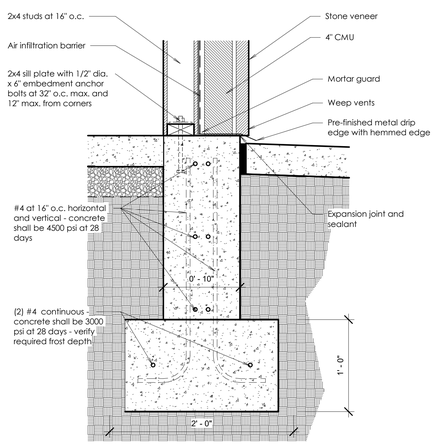

C Wall Base Detail
Scale: 1 1/2" = 1'-0"

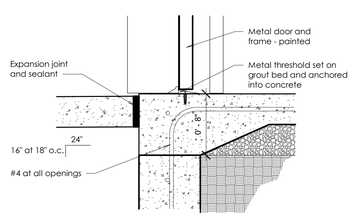

D Door Threshold Detail
Scale: 1 1/2" = 1'-0"

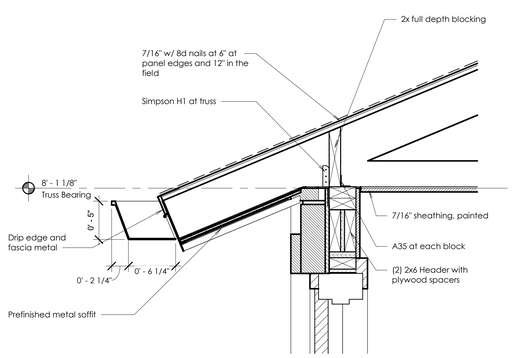

E Head Detail
Scale: 1 1/2" = 1'-0"

Code Analysis	
Building Code	IBC 2018
Occupancy	S-1
Construction Type	V-B ; Non-Sprinklered
Height	12'
Stories	1
Building Area	165 Gross SF
Occupant Load	165/300 = .55 = 1 Occupant
Building is Unconditioned - No Heating or Cooling	

Note:
Install brick and manufactured stone veneer finishes . See main building drawings.

bhd ARCHITECTS
www.bhdarchitects.com
Phone 801.571.0010
Fax 801.571.0303
Toll Free 888.571.0010
65 East Wadsworth Park Drive
Suite 205 Draper, Utah 84020

LICENSED ARCHITECT
Lafe Theodore Harris
15 Aug 2024
5178898-0301
STATE OF UTAH

THE CHURCH OF JESUS CHRIST OF LATTER-DAY SAINTS

Orem YSA 3rd 10 Ward Building
Orem UT YSA 3rd Stake

Approx. 1700 West 575 South
Vineyard, Utah 84059

Owner #: 590-1876
Plan Series: 2024 10 Wards S/C
County Parcel: 37-228-0001
BHD #: 2344
Date: 15 Aug 2024

Drawing Issue and Revision Schedule

No.	Date	Description
1	15 Aug 2024	Bid Drawings

Storage Building

C801

DESIGN CRITERIA:

1. 2021 INTERNATIONAL BUILDING CODE WITH STATEWIDE AMENDMENTS
2. TYPE OF CONSTRUCTION: TYPE II–B.
3. BUILDING USE: ASSEMBLY A–3
4. BUILDING OCCUPANCY CATEGORY: II
5. BUILDING HEIGHT: PER PLANS
6. BUILDING VOLUME: 19,800 CU. FT.
7. NO. OF OCCUPANTS: 120
8. ROOF DEAD LOAD – 11 PSF PLUS FRAMING WEIGHT
   a. SHINGLES AND FELT: 3.5 PSF
   a. DIAPHRAGM SHEATHING: 2.3 PSF
   b. WOOD DECK: 4.0 PSF
   c. MISCELLANEOUS: 1.2 PSF
9. ROOF LIVE LOAD – 20 PSF
10. SNOW LOAD
    a. Pg: 36 PSF (GROUND SNOW LOAD)
    b. Pf = 0.7 * Pg * Ce * Ct * Is = 27 PSF (ROOF SNOW LOAD)
       4) BUILDING ELEVATION: 4540 FT
    c. Ps = Pf Cs
       1) Cs: 1.0 FOR A 4:12 PITCH
       2) Ps: 27 PSF
11. WIND LOAD (ULTIMATE)
    a. V3s: 115 MPH
    b. EXPOSURE: C
    c. W: 1.00
12. SEISMIC LOAD (ULTIMATE)
    a. Ie: 1.00
    b. Ss: 1.274
    c. S1: 0.46
    d. Sds: 1.019
    e. Sd1: ---
    f. Ωo: 1.25
    g. Cd: 2.5
    h. SITE CLASS: D
    i. SEISMIC DESIGN CATEGORY: D
    j. R: 1.25 (CANTILEVERED STEEL COLUMNS)
    k. EQUIVALENT LATERAL FORCE PROCEDURE
    l. Cs = 0.89
13. ALLOWABLE SOIL BEARING PRESSURE:
    a. 1200 PSF
    b. ALLOWABLE FOUNDATION AND LATERAL PRESSURE = 100 PSF/FT BELOW NATURAL GRADE (TABLE 1806.2 OF 2021 IBC).
    c. USE CONSTRAINED CONDITIONS FOR CONCRETE PIERS
    d. COORDINATE ALL SITE GRADING AND SOIL WORK WITH THE SOILS REPORT BY EARTHTEC TESTING & ENGINEERING GEOTECHNICAL REPORT NUMBER 041524, DATED OCTOBER 1, 2004.

PAVILION CONSTRUCTION SEQUENCE NOTES:

1. VERIFY PERMIT REQUIREMENTS BEFORE SIGNING CONTRACTS.
   a. BUILDING PERMIT
   b. PLANNING OR CONDITIONAL USE PERMIT
   c. OBTAIN REQUIRED USE PERMIT
2. REMOVE ALL VEGETATION, ROCKS, OUTCROPPINGS, AND TREES FROM LOCATION OF PAVILION SLAB. STRIP 6" OF TOP SOIL.
3. LEVEL PAVILION BUILDING AREA. AVOID GRADING THAT ALLOWS WATER TO DRAIN TOWARD PAVILION.
4. DIG COLUMN CAISSONS.
5. PLACE COLUMN CAISSON FORMS AND SET REINFORCING STEEL.
6. SET COLUMN ANCHOR BOLTS USING PLYWOOD TEMPLATE OF APPROXIMATELY THE SAME SIZE AS COLUMN BASE PLATE TO INSURE BOLT LOCATION ACCURACY.
7. PLACE CONCRETE IN CAISSON FORMS FROM BOTTOM OF PIER UP TO A LEVEL 1–1/2" BELOW BOTTOM OF COLUMN BASE PLATE. LET CONCRETE CURE 7 DAYS.
8. SET HSS COLUMNS OVER PRE–SET ANCHOR BOLTS ALLOWING COLUMNS TO REST ON LEVELING NUTS AND 1/4"x 3" PLATE WASHERS. LEVELING NUTS ARE TO BE USED TO SET COLUMNS PLUMB AND TRUE AND AT CORRECT BEARING HEIGHT TO RECEIVE GLU–LAM BEAMS.
9. AFTER COLUMNS ARE SET PLUMB AND TRUE, VERIFY ACCURACY OF DIMENSIONS BETWEEN COLUMNS AND SECURE COLUMNS IN PLACE USING 1/4"x 3" PLATE WASHERS UNDER NUTS. TIGHTEN NUTS WITH ADDITIONAL 1/4 TURN PAST SNUG.
10. THE WEIGHT OF GLU–LAM BEAMS IS APPROXIMATELY 500 POUNDS EACH. SOME FORM OF MECHANICAL HOIST IS RECOMMENDED FOR SETTING BEAMS ON TOP OF STEEL TUBE COLUMNS.
11. NOTCH A 1"x 1" HOLE AT TOP OF BEAMS NEAR CENTER PEAK FOR ELECTRICAL CONDUIT TO PASS THROUGH.
12. LIFT GLU–LAM BEAMS AND SET EACH END IN THE COLUMN SADDLE PLATES.
13. ANCHOR BEAMS IN SADDLES WITH (8) SIMPSON SDS25112 WOOD SCREWS.
14. ONCE GLU–LAM BEAMS ARE SET AND SECURELY BOLTED, ADEQUATELY BRACE EACH BEAM USING 2x LUMBER TO PREVENT BEAMS FROM OVERTURNING UNTIL ROOF DECK AND ROOF SHEATHING ARE SECURELY ANCHORED IN PLACE.
15. SET 2x8 TONGUE AND GROOVE ROOF DECK WITH COMMON OR RING SHANK NAILS IN ACCORDANCE WITH SUPPLIERS' RECOMMENDATIONS.
16. INSTALL 2x6 FASCIA BOARD AROUND ENTIRE ROOF PERIMETER. ALIGN TOP OF FASCIA BOARD WITH TOP OF ROOF DECKING.
17. INSTALL WOOD ROOF SHEATHING OVER 2x8 TONGUE AND GROOVE ROOF DECK AT 45 DEGREES AS SHOWN IN ROOF DIAPHRAGM DETAIL.
18. LAY 30 POUND FELT UNDERLAYMENT OVER ENTIRE ROOF STARTING AT FASCIA DRIP EDGE, OVERLAP EACH ROLL 6" AS FELTS ARE LAID UP TO RIDGE.
19. INSTALL PRE–FINISHED METAL DRIP EDGING ON ALL PERIMETER EDGES OF ROOF.
20. INSTALL FIBERGLASS SHINGLES OVER ROOF UNDERLAYMENT AND PRE–FINISHED METAL DRIP EDGING. FOLLOW MANUFACTURER'S INSTRUCTIONS.
21. PLACE NON–SHRINK GROUT UNDER COLUMN BASE PLATES. FINISH NON–SHRINK GROUT EDGES TO 45 DEGREES.
22. PLACE REMAINDER OF CONCRETE SLAB ANY TIME AFTER GLU–LAM BEAMS, ROOF DECKING, AND PLYWOOD ROOF SHEATHING ARE SECURELY IN PLACE.
23. FINISH TOP SURFACE OF CONCRETE SLAB WITH A LIGHT BROOM FINISH.
24. AS SOON AS CONCRETE HAS CURED ENOUGH TO SUPPORT AN EARLY ENTRY SAW (4–6 HOURS AFTER PLACEMENT), CUT CONTROL JOINTS IN SLAB TOP SURFACE. DEPTH OF CONTROL JOINTS IS TO BE 1" DEEP.
25. INSTALL MEMBRANE CURING ON CONCRETE SLAB.
26. ALLOW CONCRETE SLAB TO CURE A MINIMUM OF 7 DAYS BEFORE PROCEEDING WITH REMAINDER OF PAVILION WORK.
27. ALL STEEL COLUMNS, SADDLES, BOLTS, AND BASE PLATES TO BE POWDER COATED TOUCH–UP FINISH PAINTING BY OTHERS.
28. STAIN ALL EXPOSED WOOD.

SITE PREPARATION:

1. REMOVE ALL ORGANIC MATERIAL AND TOPSOIL FROM PAVILION AREA. VERIFY SUITABILITY OF SUBGRADE. FOUNDATIONS ARE TO BE ON UNDISTURBED, NATURAL SOIL OR ENGINEERED FILL EXTENDING TO SUITABLE UNDISTURBED NATURAL SOILS
2. PLACE FOOTINGS/CAISSONS IN FIRM UNDISTURBED NATURAL SUBGRADE (UNLESS NOTED OTHERWISE BY GEOTECHNICAL REPORT).
3. COMPACT SUBGRADE AND FILL UNDER CONCRETE FLOOR SLAB TO 95 PERCENT OF ASTM D–1557 (UNLESS NOTED OTHERWISE BY GEOTECHNICAL REPORT).
4. INSTALL AND COMPACT 6 INCH GRANULAR BASE BENEATH CONCRETE FLOOR SLAB TO 95 PERCENT OF ASTM D–1557.

UTILITIES: (BY OTHERS)

1. INSTALL PLUMBING LINE FOR COLD WATER.
2. INSTALL ELECTRICAL LIGHTS, BOXES, CONDUITS, AND SWITCHES.

SPECIFICATIONS:

SCOPE– ONE EACH 30 FOOT BY 60 FOOT PAVILION WITH MINIMUM 4 INCH THICK CONCRETE SLAB. PROVIDE SHINGLES, ROOFING FELTS, FASCIA, SHEATHING, ROOF FRAMING, BEAMS, SOFFIT, CONNECTION HARDWARE, COLUMNS, CONCRETE SLAB, CONCRETE CAISSONS AND FINISHES TO CONSTRUCT COMPLETE PAVILION.

PAVILION HAS BEEN DESIGNED AS A FREE STANDING, OPEN STRUCTURE. RE–ENGINEER PAVILION IF WALLS ARE ADDED, IF STRUCTURE IS TO ADJOIN ANOTHER STRUCTURE, OR IF OTHER SUCH MODIFICATIONS ARE MADE. PROPERLY BRACE WOOD BEAMS AND MEMBERS UNTIL COMPLETE STRUCTURAL SYSTEM HAS BEEN CONSTRUCTED.

CONCRETE:

1. CONCRETE SLAB ON GRADE IS TO BE REINFORCED AND BE 4" MINIMUM THICK. INSTALL WITH CRACK CONTROL JOINTS AS SHOWN. SURFACE IS TO HAVE A BULL FLOAT FINISH AND BE LIGHTLY BROOMED.
2. EDGE OF SLAB IS TO BE THICKENED TO 8" WIDE AND BE REINFORCED WITH (2) #4 CONTINUOUS BARS. LAP SPLICES 24".
3. PROVIDE DEFORMED REINFORCING STEEL BARS CONFORMING TO ASTM A615 WITH A MINIMUM YIELD STRENGTH OF 60,000 PSI. SECURELY ANCHOR REINFORCING STEEL, AND PROVIDE CLEARANCES, IN ACCORDANCE WITH THE LATEST EDITION OF ACI 318.
4. MINIMUM CONCRETE MIX DESIGN REQUIREMENTS:
   a. COMPRESSIVE STRENGTH OF CONCRETE TO BE 4,500 PSI AT 28 DAYS.
   b. MAX W/C: 0.45
   c. 6% (+/–1.5%) AIR ENTRAINMENT.
   d. CEMENT TYPE II/V
   e. DESIGNED FOR THE FOLLOWING EXPOSURE CATEGORIES AND CLASSES:
   e.a. F2, S1 (PER ACI 318 TABLEL 4.2.1)
   f. LIMIT SLUMP TO 4" (+/–1")
5. VERIFY STRENGTH REQUIREMENTS AND CEMENT TYPE REQUIREMENTS WITH THE GEOTECHNICAL EVALUATION REPORT.
6. ALL CONCRETE WORK TO BE IN ACCORDANCE WITH THE LATEST EDITION OF ACI 318.
7. SLAB TO BE SEALED WITH WEATHERWORKER J–29A CONCRETE SEALER, BY DAYTON SUPERIOR CORPORATION. INSTALL AS PER MANUFACTURERS INSTRUCTIONS.
8. MEMBRANE CONCRETE CURING: USE CLEAR CURE J7wb BY DAYTON SUPERIOR CORPORATION. FOLLOW MANUFACTURERS INSTALLATION INSTRUCTIONS.

STRUCTURAL STEEL:

1. ALL STEEL PLATES TO BE ASTM A36
2. STEEL TUBES TO BE ASTM A500, GRADE B, Fy = 46,000 PSI
3. ALL WELDING IS TO BE DONE IN ACCORDANCE WITH LATEST AWS STANDARDS. IF WELDS ARE NOT SPECIFIED, ALL WELDS ARE TO DEVELOP THE FULL STRENGTH OF ALL COMPONENT PARTS.
4. ALL BOLTS ARE TO BE ASTM A325 EXCEPT THAT ANCHOR BOLTS ARE TO BE ASTM F1554 GRADE 36.
5. ALL EXPOSED BOLTS ARE TO BE PAINTED TO MATCH STRUCTURE.
6. ALL HOLES IN STEEL TO BE 1/16" LARGER THAN THE DIAMETER OF THE CONNECTING BOLT UNLESS NOTED OTHERWISE.
7. ALL FABRICATED STEEL IS TO BE PRIMED AND FINISH POWDER COATED.

WOOD:

1. GLU–LAM BEAMS:
   c. SOUTHERN YELLOW PINE
   d. 24F–V3 STRESS COMBINATION
   e. 2–INCH NOMINAL THICK LAMINATIONS
   f. 5" MINIMUM WIDTHS
   g. RESORCINOL ADHESIVE
   h. DOUBLE PITCHED AND TAPERED
   i. ARCHITECTURAL APPEARANCE GRADE
   j. STAIN AND SEAL FINISH
   k. ROOF PITCH IS TO BE 4 VERTICAL TO 12 HORIZONTAL (4:12)
   l. MATERIALS, MANUFACTURE AND QUALITY CONTROL OF GLUE LAMINATED BEAMS SHALL BE IN CONFORMANCE WITH "AMERICAN NATIONAL STANDARD FOR WOOD PRODUCTS – STRUCTURAL GLUED LAMINATED TIMBER" ANSI/AITC A190.1.
   m. MEMBERS SHALL BE MARKED WITH AN AITC OR APA/EWS QUALITY MARK AND, IN ADDITION, AN AITC OR APA/EWS CERTIFICATE OF CONFORMANCE SHALL BE PROVIDED TO INDICATE CONFORMANCE WITH ANSI/AITC A190.1.
   n. FACTORY SEAL BEAMS AND INDIVIDUALLY WRAP FOR PROTECTION IN TRANSIT, STORAGE, AND ERECTION.
   o. TEMPORARY STORAGE SHALL CONSIST OF LEVELED BLOCKS, WELL OFF GROUND, SEPARATION WITH WOOD STRIPS FOR AIR CIRCULATION AROUND EACH MEMBER, COVER TOP AND SIDES WITH MOISTURE RESISTANT PAPER.
   p. USE NON–MARRING SLINGS WHEN HANDLING, DRY–IN ROOF AS SOON AS ERECTED.
   q. PROTECTIVE WRAPPING SHALL REMAIN ON BEAMS UNTIL DECK HAS BEEN INSTALLED AND SHINGLES APPLIED.
2. ROOF FRAMING
   a. USE GALVANIZED NAILS.
   b. 2x6 FASCIA: NO. 1 SOUTHERN YELLOW PINE, KILN DRIED, CHROMATED COPPER ARSENATE PRESSURE TREATED (0.4 PCF), SURFACED ON FOUR SIDES, AND STAINED. FASCIA IS TO BE FREE OF ANY GROOVES OR INCISIONS.
      1) MITER ENDS OF FASCIA AT CORNERS
      2) BUTT FASCIA ONLY AT BEAM ENDS
      3) FASTEN FASCIA TO BEAM WITH NOT LESS THAN THREE 16d COMMON, GALVANIZED NAILS AT EACH BEAM JUNCTION AT EAVE AND TO OUTLOOKERS WITH TWO 16d COMMON, GALVANIZED NAILS AT EACH RAKE.
   c. 2x8 ROOF DECK:
      1) DOUGLAS FIR LARCH, SINGLE TONGUED AND GROOVED, SPECIFIED LENGTH, CENTER MATCHED, EDGE VEED TWO SIDES, KILN DRIED, AND STAINED – NO. 2 GRADE.
      2) DECK FURNISHED IN SPECIFIED LENGTHS SO ALL JOINTS OCCUR OVER BEAMS – RANDOM LENGTH DECK IS UNACCEPTABLE. DECK SHALL BE INSTALLED WITH A 2 SPAN CONDITION, MINIMUM.
      3) INSTALL IN ACCORDANCE WITH SUPPLIER'S SPECIFICATIONS USING 16d COMMON OR RING SHANK NAILS. MINIMUM. NAILING SHALL BE FACE NAILED USING (3) NAILS AT EACH BEARING POINT WITH A 4TH NAIL DIAGONALLY THROUGH THE TONGUE OF THE DECKING MEMBER. NAILS MUST PENETRATE 1–1/2 INCHES INTO SOLID WOOD.
      4) INSTALL WITH TONGUES UP ON SLOPED ROOFS.
3. ROOF SHEATHING:
   a. 7/16" THICK PLYWOOD OR ORIENTED STRAND BOARD COMPLYING WITH STANDARD PS–1 OF THE AMERICAN PLYWOOD ASSOCIATION APA/ANSI A199.1. APPROPRIATE APA STAMP IDENTIFYING FOLLOWING REQUIREMENTS: 24/0 SPAN INDEX RATING, EXTERIOR EXPOSURE, 18 PERCENT MAXIMUM MOISTURE CONTENT WHEN FABRICATED.
   b. INSTALL DIRECTLY OVER WOOD TONGUE AND GROOVE ROOF DECKING IN 4'x8' PANELS AT 45 DEGREES TO DECKING. STAGGER PANEL JOINTS APPROXIMATELY 4'–0" AND GAP JOINTS 1/4 INCH. STAPLE AROUND PERIMETER OF EACH PANEL WITH STAPLES AT 2" O.C. PER LINEAR FOOT. STAPLE WITHIN FIELD OF EACH PANEL WITH (2) ROWS OF STAPLES AT 8" O.C.
   c. PROTECT SHEATHING WITH 30 POUND FELT IMMEDIATELY AFTER INSTALLATION

ROOF SYSTEM

1. 50 YEAR ASPHALT SHINGLE by OWENS CORNING WITH A LIFETIME WARRANTY
2. PROFILE NOMINAL SIZE: 13"x 39 3/8"
3. EXPOSURE: 5 5/8"
4. COLOR AS PER OWNER FROM MANUFACTURERS STANDARD COLOR SELECTION.
5. INSTALL PER MANUFACTURER'S INSTRUCTIONS
6. PROVIDE EDGE AND TERMINATION DETAIL COMPONENTS AS REQUIRED TO OBTAIN MANUFACTURER'S WARRANTY.

STAIN:

1. BEAMS, DECK, AND FASCIA SHALL BE FACTORY STAINED WITH "OLYMPIC" SEMI–TRANSPARENT STAIN. BEAMS AND FASCIA TO BE STAINED NO. 708 WALNUT, DECK TO BE STAINED NO. 911 CAPE COD GRAY OR AS SELECTED BY OWNER.

ELASTOMERIC JOINT SEALANTS:

1. PROVIDE SIKASIL–728 NS NON–SAG SILICONE SEALANT AT SAW CUT JOINTS AND COLD JOINTS.
2. PROVIDE DOW CORNING 791 SILICONE WEATHERPROOFING SEALANT AT COLUMN/CONCRETE JOINT.
3. CLEAN AND PREPARE SURFACES.
4. USE PROPER PRIMER AND BACKING MATERIALS AS REQUIRED TO INSTALL SEALANTS.
5. PROVIDE MASKING AND TEST STRIPS AS NEEDED.
6. INSTALL ALL RELATED SEALANTS AND MATERIALS AS PER THE MANUFACTURER'S RECOMMENDATIONS AND INSTRUCTIONS.

PLUMBING AND ELECTRICAL: (BY OTHERS)

1. COORDINATE PLUMBING AND ELECTRICAL REQUIREMENTS WITH ARCHITECTURAL AND CITE PLANS, BY OTHERS.

The pavilion package is furnished and shipped by the owner. The pavilion kit includes the metal structure, wood structure, fascia metal, column anchor bolts, tables, and drinking fountain.

The contractor is required to:
1. Offload the pavilion package (pavilion kit, tables, and drinking fountain) at the project site.
2. Protect the pavilion materials before installation.
3. Furnish and install the base and fill under and around the pavilion pad and foundations. Refer to the civil and site sheets.
4. Furnish and install the concrete slab, foundations, reinforcing, grout, expansion joint material, etc. Refer to the civil and site sheets.
5. Install the owner-furnished steel columns, wood beams, and wood deck.
6. Furnish and install the roof sheathing.
7. Furnish and install the drip edge, roofing underlayments, and shingles.
8. Install the owner-furnished metal fascia.
9. Furnish and install the electrical and lighting systems. Refer to the electrical sheets.
10. Install the owner-furnished drinking fountain.
11. Touch-up paint and touch-up stain as necessary.
12. Assemble and install the owner-furnished tables.

Refer to the site plans for the actual dimensions and locations of the floor slab, slab joint lines, and the drinking fountain.

Picnic tables furnished with pavilion kit will include two ADA-compliant accessible tables per IBC 1108.2.9.1. See Detail C/C812.

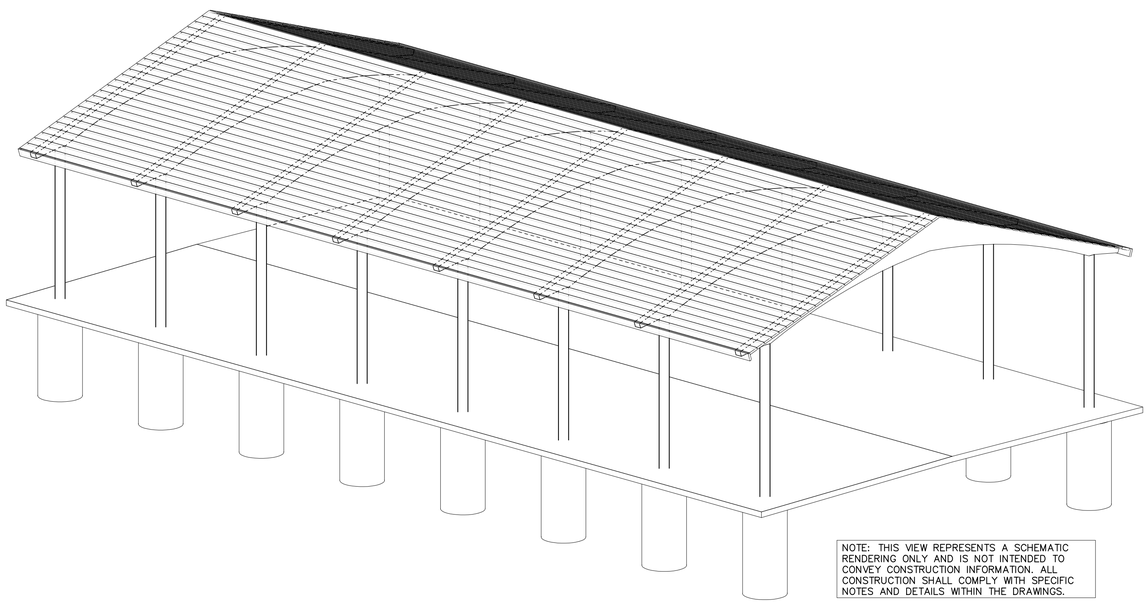

NOTE: THIS VIEW REPRESENTS A SCHEMATIC RENDERING ONLY AND IS NOT INTENDED TO CONVEY CONSTRUCTION INFORMATION. ALL CONSTRUCTION SHALL COMPLY WITH SPECIFIC NOTES AND DETAILS WITHIN THE DRAWINGS.

Supplier:

SMITH STEELWORKS

PROFESSIONAL ENGINEER
DOUGLAS M. FARLEY
No.318831
05/10/2024
STATE OF UTAH

30'x60' Glulam Pavilion
Kit 1 Option A

550 South Geneva Road
Vineyard, Utah

Project for:
THE CHURCH OF JESUS CHRIST OF LATTER-DAY SAINTS

Mark	Date (m/d/y)	Description

Project Number:

Plan Series:

Property Number:

Sheet Title:
PLAN VIEWS

Sheet:
C811

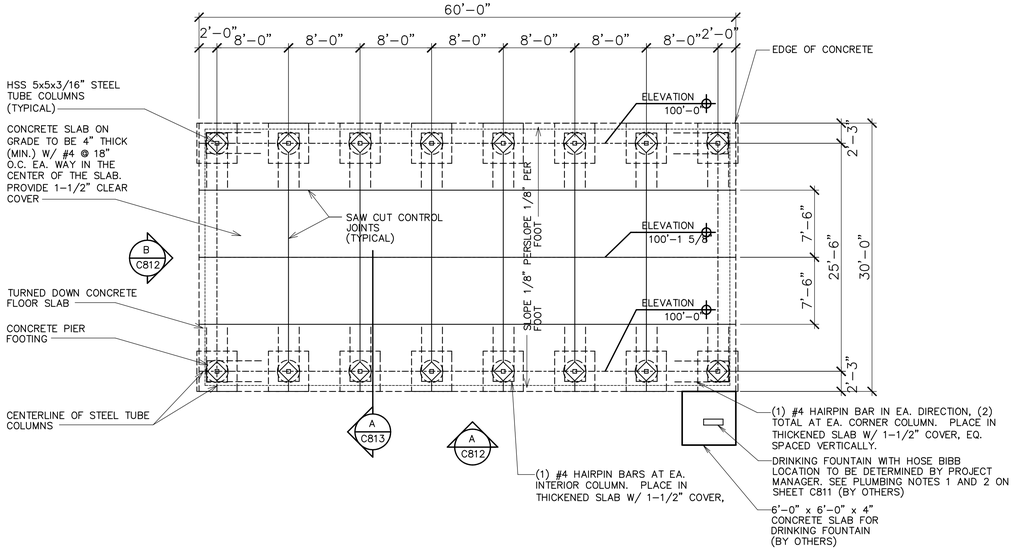

1 FLOOR PLAN
SCALE: 1/8" = 1'-0"

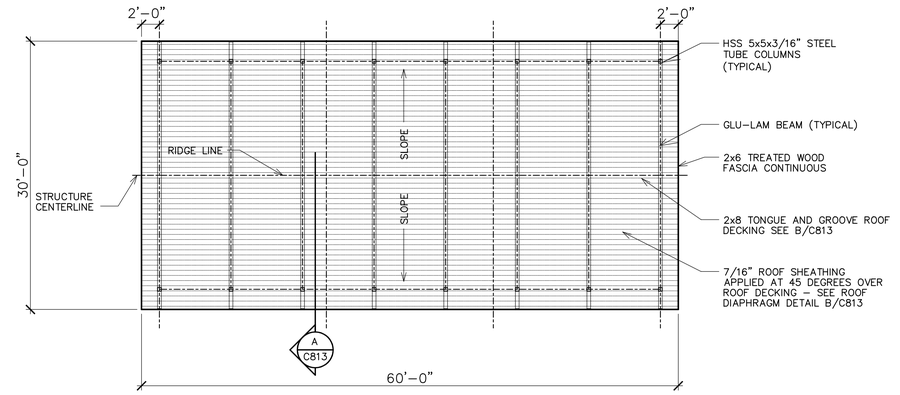

2 ROOF FRAMING PLAN
SCALE: 1/8" = 1'-0"

The pavilion package is furnished and shipped by the owner. The pavilion kit includes the metal structure, wood structure, fascia metal, column anchor bolts, tables, and drinking fountain.

The contractor is required to:
1. Offload the pavilion package (pavilion kit, tables, and drinking fountain) at the project site.
2. Protect the pavilion materials before installation.
3. Furnish and install the base and fill under and around the pavilion pad and foundations. Refer to the civil and site sheets.
4. Furnish and install the concrete slab, foundations, reinforcing, grout, expansion joint material, etc. Refer to the civil and site sheets.
5. Install the owner-furnished steel columns, wood beams, and wood deck.
6. Furnish and install the roof sheathing.
7. Furnish and install the drip edge, roofing underlayments, and shingles.
8. Install the owner-furnished metal fascia.
9. Furnish and install the electrical and lighting systems. Refer to the electrical sheets.
10. Install the owner-furnished drinking fountain.
11. Touch-up paint and touch-up stain as necessary.
12. Assemble and install the owner-furnished tables.

Refer to the site plans for the actual dimensions and locations of the floor slab, slab joint lines, and the drinking fountain.

Picnic tables furnished with pavilion kit will include two ADA-compliant accessible tables per IBC 1108.2.9.1. See Detail C/C812.

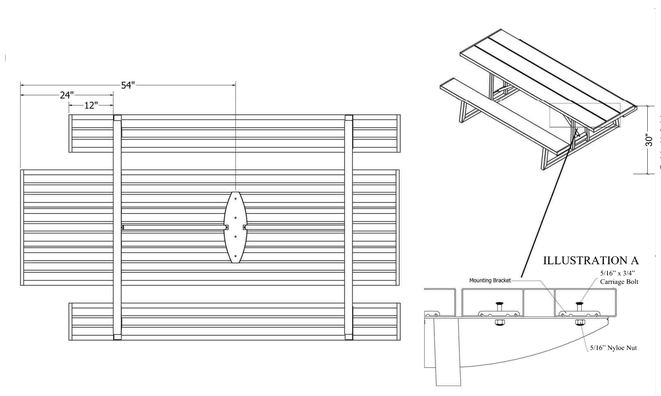

C ADA Picnic Table

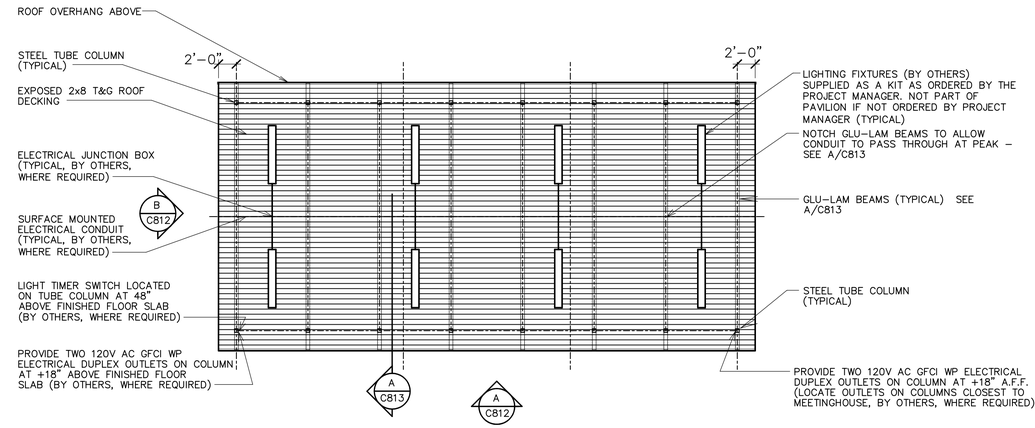

3 REFLECTED CEILING PLAN
SCALE: 1/8" = 1'-0"

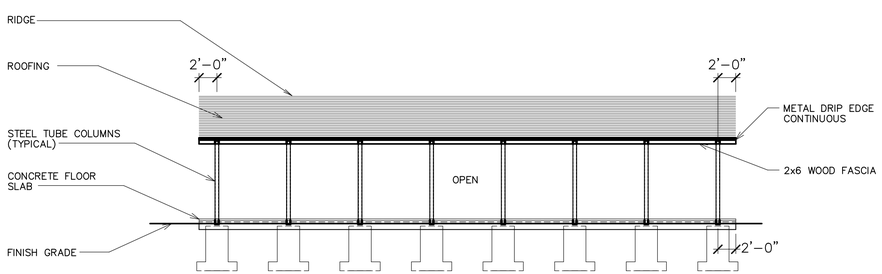

A SIDE ELEVATION
SCALE: 1/8" = 1'-0"

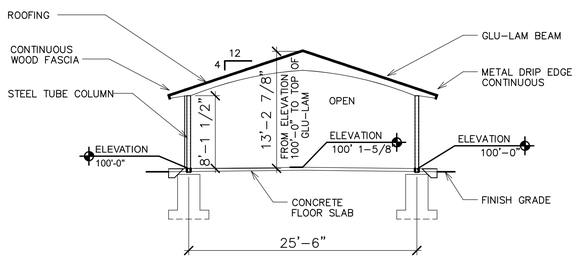

B END ELEVATION
SCALE: 1/4" = 1'-0"

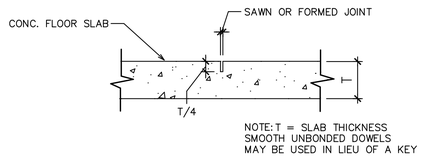

4 CONTROL JOINT DETAIL
SCALE: 1 1/2" = 1'-0"

Supplier:
SMITH STEELWORKS

PROFESSIONAL ENGINEER
DOUGLAS M. FARLEY
No.318831
05/10/2024
STATE OF UTAH

30'x60' Glulam Pavilion
Kit 1 Option A
550 South Geneva Road
Vineyard, Utah

Project for:
THE CHURCH OF JESUS CHRIST OF LATTER-DAY SAINTS

Mark	Description	Date (DMY)

Project Number:
Plan Series:
Property Number:

Sheet Title:
PLAN VIEWS

Sheet:
C812

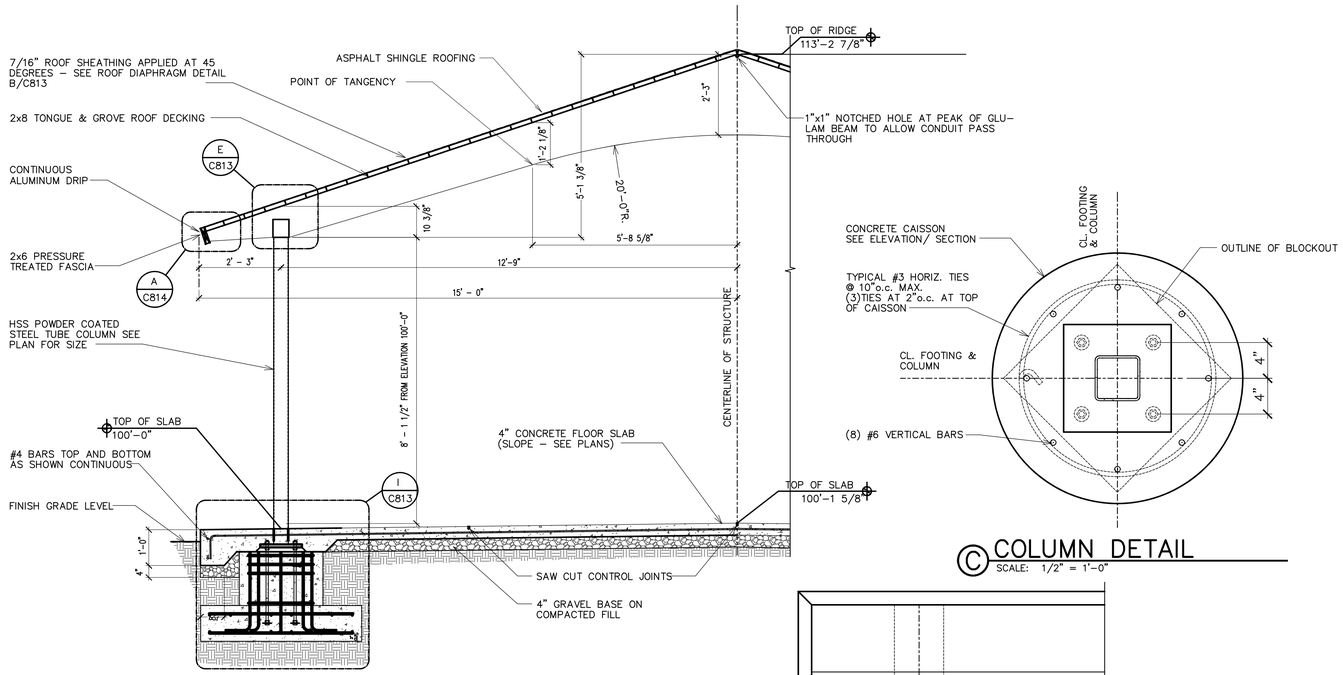

A SECTION
SCALE: 1/2" = 1'–0"

C COLUMN DETAIL
SCALE: 1/2" = 1'–0"

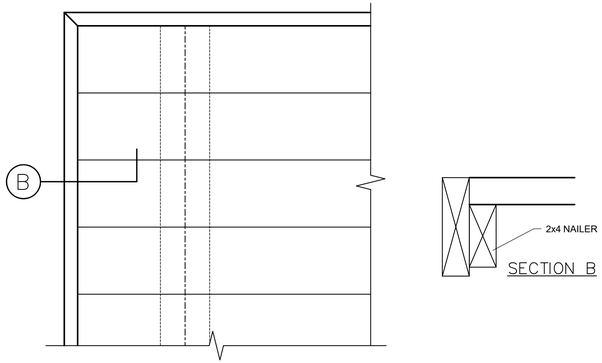

MITER ENDS OF FASCIA AT CORNERS. BUTT FASCIA ONLY AT BEAM ENDS. FASTEN FASCIA TO BEAMS W/ (3) 10d NAILS AT EACH JUNCTION AND TO DECK @ 12"o.c. (SIDES) AND 6 3/4" o.c. (ENDS)

D DECK PLAN AT CORNERS
SCALE: 1 1/2" = 1'–0"

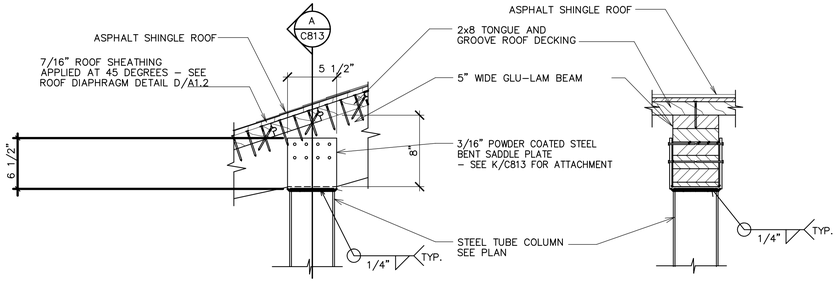

E CONNECTION
SCALE: 1 1/2" = 1'–0"

F CONNECTION
SCALE: 1 1/2" = 1'–0"

Refer to the site plans for the actual dimensions and locations of the floor slab, slab joint lines, and the drinking fountain.

Picnic tables furnished with pavilion kit will include two ADA-compliant accessible tables per IBC 1108.2.9.1. See Detail C/C812.

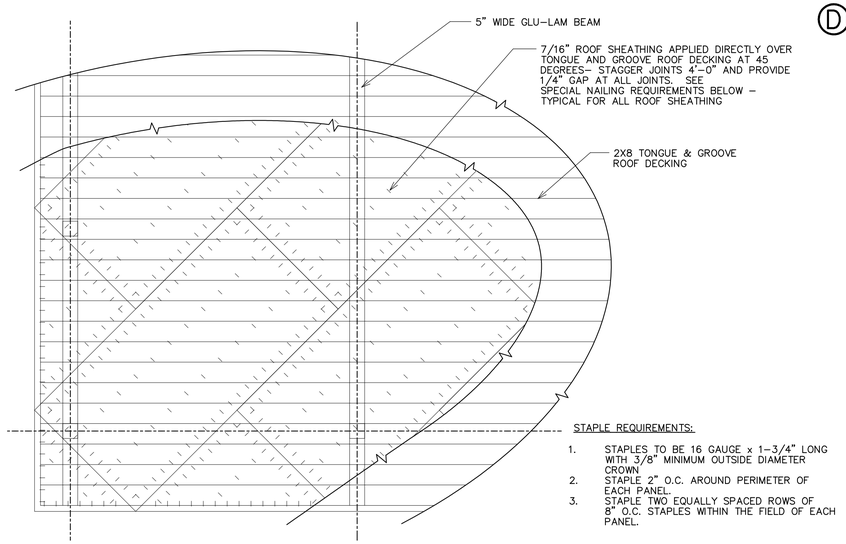

B ROOF DIAPHRAGM DETAIL
SCALE: NONE

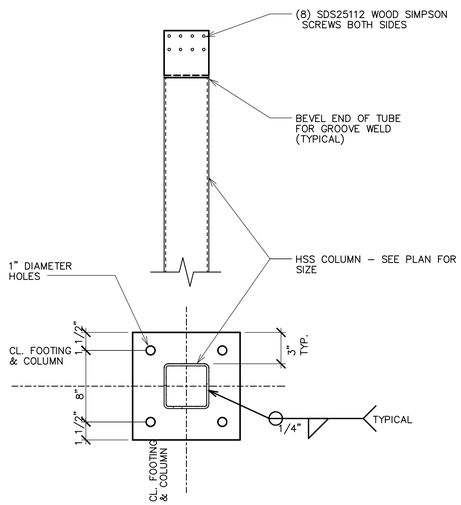

H COLUMN DETAIL
SCALE: 1/2" = 1'–0"

G NOT USED
SCALE: 1/2" = 1'–0"

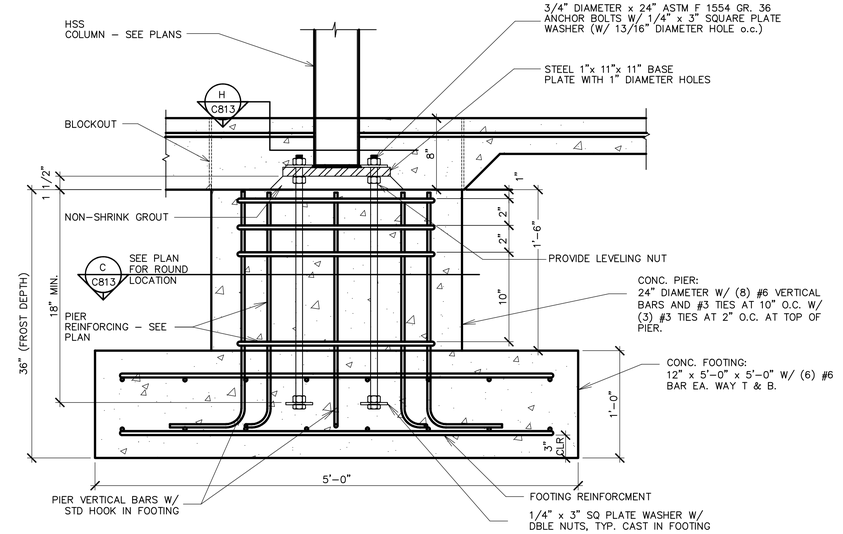

I COLUMN DETAIL
SCALE: 1 1/2" = 1'–0"

Supplier:
SMITH STEELWORKS

Seal:
PROFESSIONAL ENGINEER
DOUGLAS M. FARLEY
No.318831
05/10/2024
STATE OF UTAH

30'x60' Glulam Pavilion Kit 1 Option A
550 South Geneva Road
Vineyard, Utah

Project for:
THE CHURCH OF JESUS CHRIST OF LATTER-DAY SAINTS

Mark	Date (MM/D	Description

Project Number:
Plan Series:
Property Number:

Sheet Title:
SECTION AND DETAIL VIEWS

Sheet:
C813

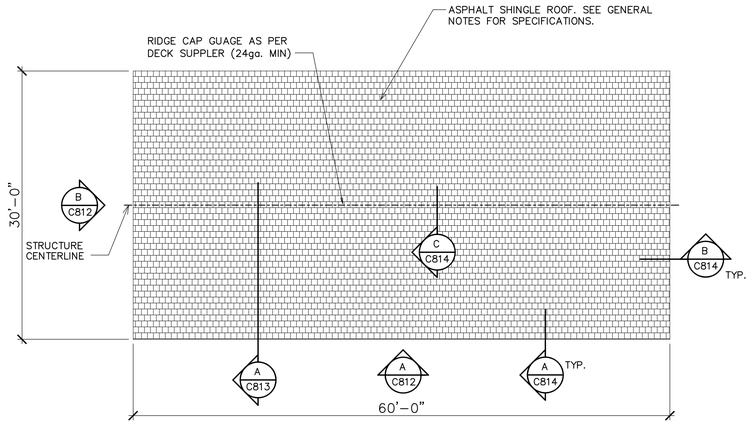

1 ROOF PLAN
SCALE: 1/8" = 1'-0"

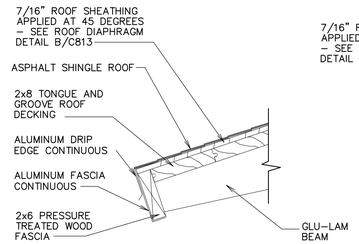

A FASCIA DETAIL
SCALE: 1 1/2" = 1'-0"

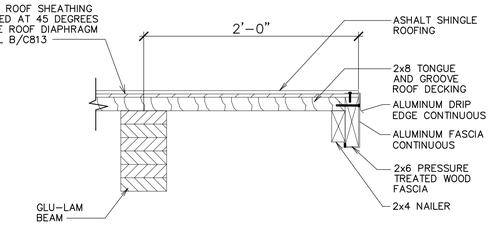

B RAKE DETAIL
SCALE: 1 1/2" = 1'-0"

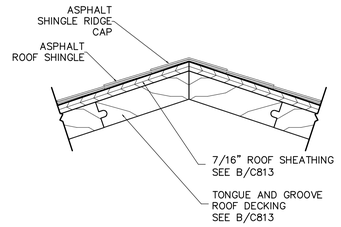

C RIDGE CAP DETAIL
SCALE: 3" = 1'-0"

Refer to the site plans for the actual dimensions and locations of the floor slab, slab joint lines, and the drinking fountain.

Picnic tables furnished with pavilion kit will include two ADA-compliant accessible tables per IBC 1108.2.9.1. See Detail C/C812.

The pavilion package is furnished and shipped by the owner. The pavilion kit includes the metal structure, wood structure, fascia metal, column anchor bolts, tables, and drinking fountain.

The contractor is required to:
1. Offload the pavilion package (pavilion kit, tables, and drinking fountain) at the project site.
2. Protect the pavilion materials before installation.
3. Furnish and install the base and fill under and around the pavilion pad and foundations. Refer to the civil and site sheets.
4. Furnish and install the concrete slab, foundations, reinforcing, grout, expansion joint material, etc. Refer to the civil and site sheets.
5. Install the owner-furnished steel columns, wood beams, and wood deck.
6. Furnish and install the roof sheathing.
7. Furnish and install the drip edge, roofing underlayments, and shingles.
8. Install the owner-furnished metal fascia.
9. Furnish and install the electrical and lighting systems. Refer to the electrical sheets.
10. Install the owner-furnished drinking fountain.
11. Touch-up paint and touch-up stain as necessary.
12. Assemble and install the owner-furnished tables.

Supplier:
SMITH STEELWORKS

Stamp:
PROFESSIONAL ENGINEER
DOUGLAS M. FARLEY
No.318831
05/10/2024
STATE OF UTAH

30'x60' Glulam Pavilion
Kit 1 Option A
550 South Geneva Road
Vineyard, Utah

Project for:
THE CHURCH OF JESUS CHRIST OF LATTER-DAY SAINTS

Mark	Date (DD/MM/YY)	Description

Project Number:
Plan Series:
Property Number:

Sheet Title:
ROOF VIEWS AND DETAILS

Sheet:
C814

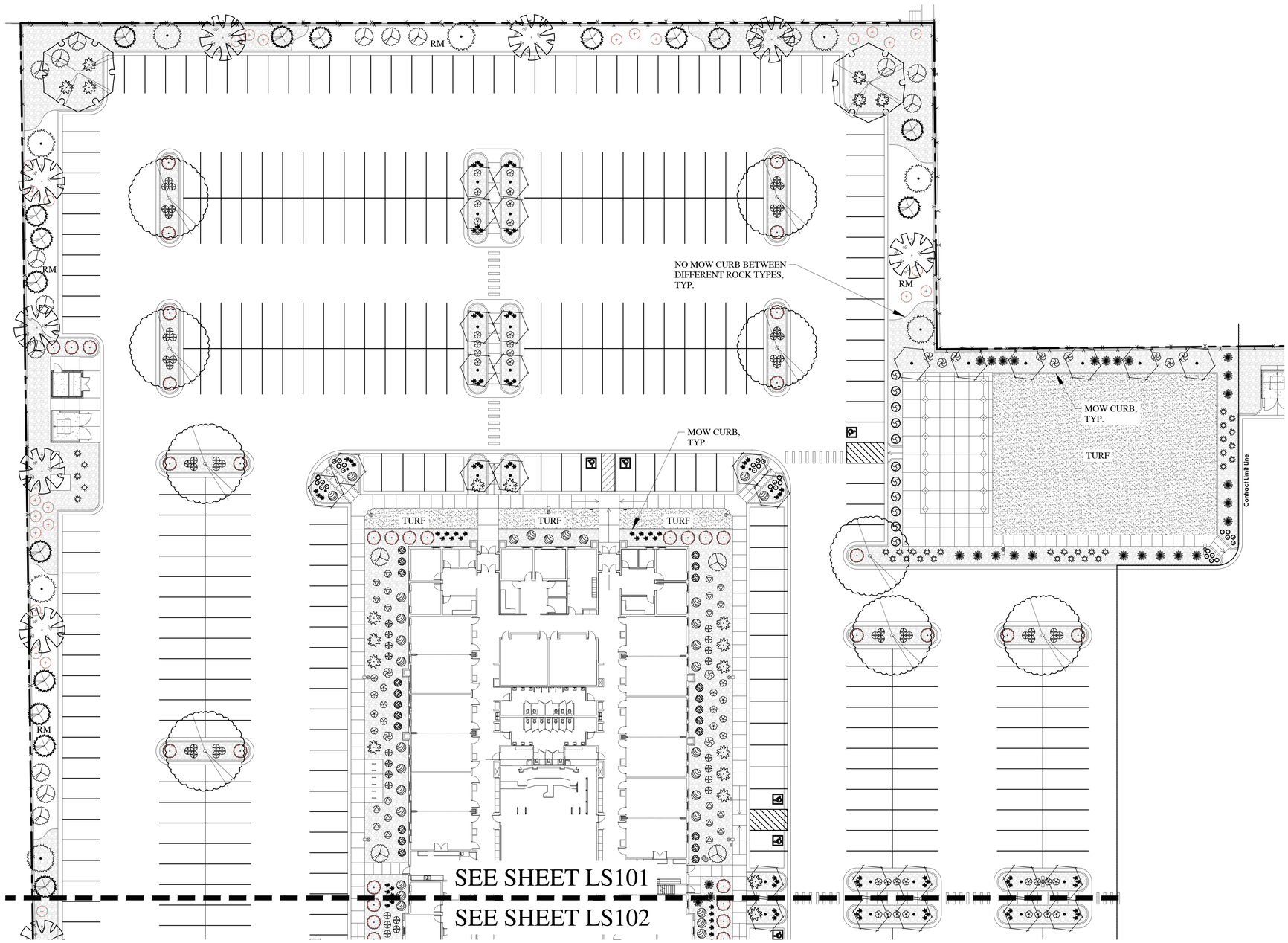

BROADLEAF DECIDUOUS LEGEND

SYMBOL	BOTANICAL NAME/COMMON NAME	QTY	SIZE
	ACER MIYABEI 'MORTON' STATE STREET STATE STREET MAPLE	3	2" CAL.
	CARPINUS CAROLINIANA 'RISING FIRE' RISING FIRE AMERICAN HORNBEAM	40	2" CAL.
	CERCIS CANADENSIS EASTERN REDBUD*	10	2" CAL.
	GLEDITSIA TRIACANTHOS 'IMPERIAL' IMPERIAL HONEYLOCUST	4	2" CAL.
		6	2" CAL.
	ZELKOVA SERRATA 'GREEN VASE' GREEN VASE ZELKOVA*	12	2" CAL.

CONIFER / EVERGREEN LEGEND

SYMBOL	BOTANICAL NAME/COMMON NAME	QTY	SIZE
	PICEA OMORIKA SERBIAN SPRUCE*	12	6-7' TALL
	PINUS NIGRA 'OREGON GREEN' OREGON GREEN PINE*	23	6-7' TALL

GRASS LEGEND

SYMBOL	BOTANICAL NAME/COMMON NAME	QTY	SIZE
	HEMEROCALLIS 'STELLA D'ORO' STELLA D'ORO DAYLILY*	29	1 GAL.
	HEMEROCALLIS X 'ROSY RETURNS' ROSY RETURNS DAYLILY*	113	1 GAL.

GRASS LEGEND

SYMBOL	BOTANICAL NAME/COMMON NAME	QTY	SIZE
	CALAMAGROSTIS ACUTIFLORA 'KARL FOERSTER' FEATHER REED GRASS*	32	1 GAL.
	HELICTOTRICHON SEMPERVIRENS 'SAPPHIRE' BLUE OAT AVENA GRASS*	82	1 GAL.

SHRUB LEGEND

SYMBOL	BOTANICAL NAME/COMMON NAME	QTY	SIZE
	BUDDLEIA X 'FLUTTERBY PETITE' DWARF BUTTERFLY BUSH*	104	5 GAL.
	CERCOCARPUS INTRICATUS LITTLELEAF MOUNTAIN MAHOGANY*	27	5 GAL.
	FORSYTHIA X 'COURTASOL' GOLD TIDE FORSYTHIA	21	5 GAL.
	HIBISCUS SYRIACUS 'ANTONG TWO' LIL' KIM ROSE OF SHARON	13	5 GAL.
	JUNIPERUS SABINA 'SCANDIA' SCANDIA JUNIPER*	43	5 GAL.
	PHYSOCARPUS OPULIFOLIUS 'LITTLE DEVIL' LITTLE DEVIL NINEBARK*	56	5 GAL.
	PINUS MUGO 'SLOWMOUND' SLOWMOUND MUGO PINE*	22	5 GAL.
	PRUNUS BESSEYI 'PAWNEE BUTTES' PAWNEE BUTTES SAND CHERRY*	77	5 GAL.
	RHUS AROMATICA 'GRO-LOW' GRO LOW SUMAC*	39	5 GAL.
	ROSA X 'WEKSCHNEEKOPPE' SNOW PAVEMENT RUGOSA SHRUB ROSES*	60	5 GAL.
	RIBES ALPINUM 'GREEN MOUND' GREEN MOUND CURRANT	45	5 GAL.
	SPIRAEA JAPONICA 'MAGIC CARPET' MAGIC CARPET SPIREA	20	5 GAL.
	SYMPHORICARPOS X CHENAULTII 'HANCOCK' HANCOCK CORALBERRY* (LOW-SPREADING)	11	5 GAL.

GROUNDCOVERS LEGEND

SYMBOL	BOTANICAL NAME/COMMON NAME	QTY	SIZE
	ROCK MULCH TO BE 3/4" - 1" SIZE 'SOUTHTOWN' CRUSHED ROCK FROM UTAH LANDSCAPE ROCK IN NEPHI, UTAH. IMPLEMENT IN AREA SHOWN AT A 3" DEPTH OVER WEED BARRIER FABRIC.	PER PLAN	PER PLAN
RM	ROCK MULCH TO BE 2" - 4" SIZE 'OAK CREEK PLUM' COBBLE ROCK FROM UTAH LANDSCAPE ROCK IN NEPHI, UTAH. IMPLEMENT IN AREA SHOWN AT A 6" DEPTH OVER WEED BARRIER FABRIC.	PER PLAN	PER PLAN
	DESERT SAGE BLUEGRASS FROM CHANSHARE SOD FARMS. INSTALL PER SOD LAYING NOTES	SOD ROLLS	SOD ROLLS
	DECORATIVE LANDSCAPE BOULDERS SIZE: 2', 3' AND 4' BOULDERS (MATCH/COMPLIMENT DECORATIVE ROCK MULCH IN PLANTING AREAS)	PER PLAN	PER PLAN

DESIGN CRITERIA

ECO-REGION	10.1 NORTHERN COLD DESERT
CLIMATE	U.S. HARDINESS ZONE 5
ZONING ORDINANCE	VINEYARD CITY
WATER AVAILABILITY	NA
SOIL TYPE	NA
SLOPES	SEE GRADING PLAN
WIND	SOUTH PREVAILING
SETBACKS/EASEMENTS	NA
MICROCLIMATES	NA
SOIL PH	NA
LAWN AREA	28% OF TOTAL LANDSCAPE (27,139 SQ. FT.)
UNDEVELOPED	NA
PROPERTY IRRIGATION SYSTEM	AUTOMATED SYSTEM WITH SMART CONTROLLER

LANDSCAPE DATA

TOTAL SITE AREA	415,178 SQ.FT.*		9.5 ACRES
TOTAL LANDSCAPE AREA	96,139 SQ.FT.*		23%
PLANTER AREA	69,000 SQ.FT.		72%
LAWN AREA	27,139 SQ.FT.		28%
TREES ON SITE	161**		
		TOTAL REQ'D = NA	PROVIDED = 161
		DECIDUOUS REQ'D = NA	PROVIDED = 117
		EVERGREEN REQ'D = NA	PROVIDED = 44
		SHRUBS REQ'D = NA	PROVIDED = 1,404
		DROUGHT TOLERANT REQ'D = NA	
ADDITIONAL INFO	NA	DROUGHT TOLERANT PROVIDED = 1,297 (92%)	

* PARK STRIP LANDSCAPE OF 5,826 SQ.FT. NOT INCLUDED IN THIS TOTAL
** TREE/PLANTING COUNT INCLUDES SPRINGWATER BUILDING SECTION OF SITE

LANDSCAPE NOTES

1. STOCKPILED, SCREENED TOPSOIL TO BE IMPLEMENTED IN ALL PLANTING AREAS AT THE FOLLOWING DEPTHS: 12" IN ALL SHRUB BEDS, 5" IN ALL LAWN AREAS.
2. LAWN TO BE A DESERT SAGE BLUEGRASS BLEND (FROM CHANSHARE SOD) AND BE IMPLEMENTED AS SOD. REFER TO SOD LAYING NOTES FOR MORE INFORMATION.
3. 6" CONCRETE MOWCURB TO BE IMPLEMENTED BETWEEN ALL SHRUB BED AND LAWN AREAS AS SHOWN ON PLAN.
4. ROCK MULCH TO BE IMPLEMENTED IN ALL PLANTER BEDS AT DEPTHS NOTED IN LEGEND. ROCK MULCH TO BE CLEAN AND FREE OF DIRT AND DEBRIS, PLACED AT A UNIFORM DEPTH AND RAKED SMOOTH. INSTALL WEED BARRIER FABRIC UNDER ALL ROCK MULCH.
5. ALL TREES TO BE STAKED AT TIME OF PLANTING. SEE DETAILS FOR SPECIFICS. REMOVE STAKING WITHIN FIRST YEAR OR WHEN TREE IS ESTABLISHED.
6. NO LANDSCAPING OR OTHER OBSTRUCTION IN EXCESS OF 3' ABOVE FINISHED GRADE SHALL BE IMPLEMENTED IN CLEAR VIEW TRIANGLES.
7. MATERIAL QUANITITIES AND COUNTS ON LEGENDS AND NOTES ARE FOR CONVENIENCE ONLY. LANDSCAPE CONTRACTOR RESPONSIBLE TO VERIFY ALL COUNTS AND QUANITITIES ON PLANS.

SOD LAYING NOTES

1. LAY SOD WITHIN 24 HOURS OF BEING LIFTED.
2. LAY SOD IN ROWS WITH JOINTS STAGGERED. BUTT SECTIONS CLOSELY WITHOUT OVERLAPPING OR LEAVING GAPS BETWEEN SECTIONS. CUT OUT IRREGULAR OR THIN SECTIONS WITH A SHARP KNIFE.
3. LAY SOD FLUSH WITH ADJOINING EXISTING SODDED OR PAVED SURFACES.
4. AFTER SODDING HAS BEEN COMPLETED, ROLL HORIZONTAL SURFACE AREAS IN TWO DIRECTIONS PERPENDICULAR TO EACH OTHER WITH A 150 POUND SOD ROLLER. REPAIR AND RE-ROLL AREAS WITH DEPRESSIONS, LUMPS OR OTHER IRREGULARITIES. HEAVY ROLLING TO CORRECT IRREGULARITIES IN GRADE IS NOT PERMITTED.
5. WATER ALL SODDED AREAS IMMEDIATELY AFTER SOD LAYING TO OBTAIN MOISTURE PENETRATION THROUGH SOD INTO TOP 4" OF TOPSOIL.
6. PROVIDE ADEQUATE PROTECTION OF SODDED AREAS AGAINST TRESPASSING, EROSION AND DAMAGE OF ANY KIND. REMOVE THIS PROTECTION AFTER SODDED AREAS HAVE BEEN ACCEPTED BY THE OWNER.
7. REPLACE DAMAGED AREAS AT NO ADDITIONAL COST TO OWNER.

PLANT COVERAGE TABLE

	SHRUB MATURE COVERAGE	ACTUAL % COVERAGE	TREE COVERAGE INTENT	TREE COUNT
STREET FRONTAGE	25-50%	28%	FRAME BUILDING	0
PRIMARY ENTRIES	30-50%	47%	FRAME ENTRY	4
BUILDING PERIMETER	25-45%	27%	ACCENT BUILDING	8
PERIMETER SIDES	5-15%	12%	SCREEN LOT	29
PERIMETER REAR	5-15%	13%	SCREEN LOT	14

In Site DESIGN GROUP
Landscape Architecture Land Planning
17 North 420 West American Fork, Utah 84003
801.756.5043 www.in-sitedesigngroup.com

N

20' 0 20' 40' 60'

SCALE: 1"=20'-0" ON 30X42 SHEET

CALL BEFORE YOU DIG! BLUE STAKES 1-800-662-4111

bhd ARCHITECTS
www.bhdarchitects.com
Phone 801.571.0010
Fax 801.571.0303
Toll Free 888.571.0010
65 East Wadsworth Park Drive
Suite 205 Draper, Utah 84020

LICENSED LANDSCAPE ARCHITECT # 4884514 Cory B. Whiting 8-15-2024 STATE OF UTAH

THE CHURCH OF JESUS CHRIST OF LATTER-DAY SAINTS

Orem YSA 3rd 10 Ward Building
Orem UT YSA 3rd Stake

Approx. 1700 West 575 South
Vineyard, Utah 84059

Owner #: 590-1876
Plan Series: 2024 10 Ward SC
County Parcel: 97:220:0001
BID #: 2544
Date: 15 Aug 2024

Drawing Issue and Revision Schedule		
#	Date	Description
1	15 Nov 2019	Bid Documents

LANDSCAPE PLAN

LS101

Printed: 14 Aug 2024 5:20 PM

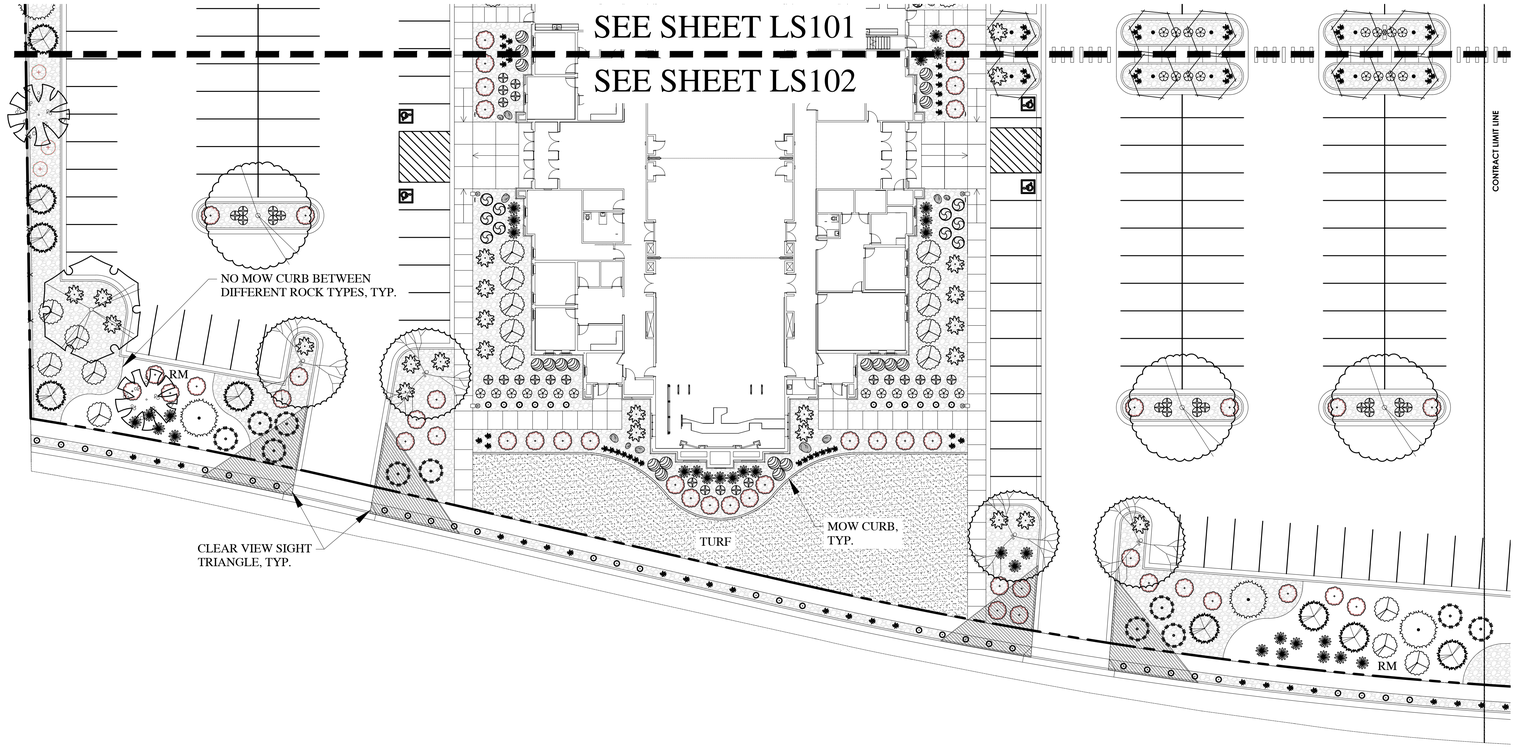

DESIGN CRITERIA

ECO-REGION	10.1 NORTHERN COLD DESERT
CLIMATE	U.S. HARDINESS ZONE 5
ZONING ORDINANCE	VINEYARD CITY
WATER AVAILABILITY	NA
SOIL TYPE	NA
SLOPES	SEE GRADING PLAN
WIND	SOUTH PREVAILING
SETBACKS/EASEMENTS	NA
MICROCLIMATES	NA
SOIL PH	NA
LAWN AREA	28% OF TOTAL LANDSCAPE (27,139 SQ. FT.)
UNDEVELOPED	NA
PROPERTY IRRIGATION SYSTEM	AUTOMATED SYSTEM WITH SMART CONTROLLER

LANDSCAPE DATA

TOTAL SITE AREA	415,178 SQ.FT.*		9.5 ACRES
TOTAL LANDSCAPE AREA	96,139 SQ.FT.*		23%
PLANTER AREA	69,000 SQ.FT.		72%
LAWN AREA	27,139 SQ.FT.		28%
TREES ON SITE	161**		
		TOTAL REQ'D = NA	PROVIDED = 161
		DECIDUOUS REQ'D = NA	PROVIDED = 117
		EVERGREEN REQ'D = NA	PROVIDED = 44
		SHRUBS REQ'D = NA	PROVIDED = 1,404
		DROUGHT TOLERANT REQ'D = NA	
ADDITIONAL INFO	NA	DROUGHT TOLERANT PROVIDED = 1,297 (92%)	

* PARK STRIP LANDSCAPE OF 5,826 SQ.FT. NOT INCLUDED IN THIS TOTAL
** TREE/PLANTING COUNT INCLUDES SPRINGWATER BUILDING SECTION OF SITE

PLANT COVERAGE TABLE

	SHRUB MATURE COVERAGE	ACTUAL % COVERAGE	TREE COVERAGE INTENT	TREE COUNT
STREET FRONTAGE	25-50%	28%	FRAME BUILDING	0
PRIMARY ENTRIES	30-50%	47%	FRAME ENTRY	4
BUILDING PERIMETER	25-45%	27%	ACCENT BUILDING	8
PERIMETER SIDES	5-15%	12%	SCREEN LOT	29
PERIMETER REAR	5-15%	13%	SCREEN LOT	14

LANDSCAPE NOTES

1. STOCKPILED, SCREENED TOPSOIL TO BE IMPLEMENTED IN ALL PLANTING AREAS AT THE FOLLOWING DEPTHS: 12" IN ALL SHRUB BEDS, 5" IN ALL LAWN AREAS.
2. LAWN TO BE A DESERT SAGE BLUEGRASS BLEND (FROM CHANSHARE SOD) AND BE IMPLEMENTED AS SOD. REFER TO SOD LAYING NOTES FOR MORE INFORMATION.
3. 6" CONCRETE MOWCURB TO BE IMPLEMENTED BETWEEN ALL SHRUB BED AND LAWN AREAS AS SHOWN ON PLAN.
4. ROCK MULCH TO BE IMPLEMENTED IN ALL PLANTER BEDS AT DEPTHS NOTED IN LEGEND. ROCK MULCH TO BE CLEAN AND FREE OF DIRT AND DEBRIS, PLACED AT A UNIFORM DEPTH AND RAKED SMOOTH. INSTALL WEED BARRIER FABRIC UNDER ALL ROCK MULCH.
5. ALL TREES TO BE STAKED AT TIME OF PLANTING. SEE DETAILS FOR SPECIFICS. REMOVE STAKING WITHIN FIRST YEAR OR WHEN TREE IS ESTABLISHED.
6. NO LANDSCAPING OR OTHER OBSTRUCTION IN EXCESS OF 3' ABOVE FINISHED GRADE SHALL BE IMPLEMENTED IN CLEAR VIEW TRIANGLES.
7. MATERIAL QUANTITIES AND COUNTS ON LEGENDS AND NOTES ARE FOR CONVENIENCE ONLY. LANDSCAPE CONTRACTOR RESPONSIBLE TO VERIFY ALL COUNTS AND QUANTITIES ON PLANS.

SOD LAYING NOTES

1. LAY SOD WITHIN 24 HOURS OF BEING LIFTED.
2. LAY SOD IN ROWS WITH JOINTS STAGGERED. BUTT SECTIONS CLOSELY WITHOUT OVERLAPPING OR LEAVING GAPS BETWEEN SECTIONS. CUT OUT IRREGULAR OR THIN SECTIONS WITH A SHARP KNIFE.
3. LAY SOD FLUSH WITH ADJOINING EXISTING SODDED OR PAVED SURFACES.
4. AFTER SODDING HAS BEEN COMPLETED, ROLL HORIZONTAL SURFACE AREAS IN TWO DIRECTIONS PERPENDICULAR TO EACH OTHER WITH A 150 POUND SOD ROLLER. REPAIR AND RE-ROLL AREAS WITH DEPRESSIONS, LUMPS OR OTHER IRREGULARITIES. HEAVY ROLLING TO CORRECT IRREGULARITIES IN GRADE IS NOT PERMITTED.
5. WATER ALL SODDED AREAS IMMEDIATELY AFTER SOD LAYING TO OBTAIN MOISTURE PENETRATION THROUGH SOD INTO TOP 4" OF TOPSOIL.
6. PROVIDE ADEQUATE PROTECTION OF SODDED AREAS AGAINST TRESPASSING, EROSION AND DAMAGE OF ANY KIND. REMOVE THIS PROTECTION AFTER SODDED AREAS HAVE BEEN ACCEPTED BY THE OWNER.
7. REPLACE DAMAGED AREAS AT NO ADDITIONAL COST TO OWNER.

BROADLEAF DECIDUOUS LEGEND

SYMBOL	BOTANICAL NAME/COMMON NAME	QTY	SIZE
	ACER MIYABEI 'MORTON' STATE STREET STATE STREET MAPLE	3	2" CAL.
	CARPINUS CAROLINIANA 'RISING FIRE' RISING FIRE AMERICAN HORNBEAM	40	2" CAL.
	CERCIS CANADENSIS EASTERN REDBUD*	10	2" CAL.
	GLEDITSIA TRIACANTHOS 'IMPERIAL' IMPERIAL HONEYLOCUST	4	2" CAL.
		6	2" CAL.
	ZELKOVA SERRATA 'GREEN VASE' GREEN VASE ZELKOVA*	12	2" CAL.

CONIFER / EVERGREEN LEGEND

SYMBOL	BOTANICAL NAME/COMMON NAME	QTY	SIZE
	PICEA OMORIKA SERBIAN SPRUCE*	12	6-7' TALL
	PINUS NIGRA 'OREGON GREEN' OREGON GREEN PINE*	23	6-7' TALL

SYMBOL	BOTANICAL NAME/COMMON NAME	QTY	SIZE
	HEMEROCALLIS 'STELLA D'ORO' STELLA D'ORO DAYLILY*	29	1 GAL.
	HEMEROCALLIS X 'ROSY RETURNS' ROSY RETURNS DAYLILY*	113	1 GAL.

GRASS LEGEND

SYMBOL	BOTANICAL NAME/COMMON NAME	QTY	SIZE
	CALAMAGROSTIS ACUTIFLORA 'KARL FOERSTER' FEATHER REED GRASS*	32	1 GAL.
	HELICTOTRICHON SEMPERVIRENS 'SAPPHIRE' BLUE OAT AVENA GRASS*	82	1 GAL.

SHRUB LEGEND

SYMBOL	BOTANICAL NAME/COMMON NAME	QTY	SIZE
	BUDDLEIA X 'FLUTTERBY PETITE' DWARF BUTTERFLY BUSH*	104	5 GAL.
	CERCOCARPUS INTRICATUS LITTLELEAF MOUNTAIN MAHOGANY*	27	5 GAL.
	FORSYTHIA X 'COURTASOL' GOLD TIDE FORSYTHIA	21	5 GAL.
	HIBISCUS SYRIACUS 'ANTONG TWO' LIL' KIM ROSE OF SHARON	13	5 GAL.
	JUNIPERUS SABINA 'SCANDIA' SCANDIA JUNIPER*	43	5 GAL.
	PHYSOCARPUS OPULIFOLIUS 'LITTLE DEVIL' LITTLE DEVIL NINEBARK*	56	5 GAL.
	PINUS MUGO 'SLOWMOUND' SLOWMOUND MUGO PINE*	22	5 GAL.
	PRUNUS BESSEYI 'PAWNEE BUTTES' PAWNEE BUTTES SAND CHERRY*	77	5 GAL.
	RHUS AROMATICA 'GRO-LOW' GRO LOW SUMAC*	39	5 GAL.
	ROSA X 'WEKSCHNEEKOPPE' SNOW PAVEMENT RUGOSA SHRUB ROSES*	60	5 GAL.
	RIBES ALPINUM 'GREEN MOUND' GREEN MOUND CURRANT	45	5 GAL.
	SPIRAEA JAPONICA 'MAGIC CARPET' MAGIC CARPET SPIREA	20	5 GAL.
	SYMPHORICARPOS X CHENAULTII 'HANCOCK' HANCOCK CORALBERRY* (LOW-SPREADING)	11	5 GAL.

GROUNDCOVERS LEGEND

SYMBOL	BOTANICAL NAME/COMMON NAME	QTY	SIZE
	ROCK MULCH TO BE 3/4" - 1" SIZE 'SOUTHTOWN' CRUSHED ROCK FROM UTAH LANDSCAPE ROCK IN NEPHI, UTAH. IMPLEMENT IN AREA SHOWN AT A 3" DEPTH OVER WEED BARRIER FABRIC.	PER PLAN	PER PLAN
RM	ROCK MULCH TO BE 2" - 4" SIZE 'OAK CREEK PLUM' COBBLE ROCK FROM UTAH LANDSCAPE ROCK IN NEPHI, UTAH. IMPLEMENT IN AREA SHOWN AT A 6" DEPTH OVER WEED BARRIER FABRIC.	PER PLAN	PER PLAN
	DESERT SAGE BLUEGRASS FROM CHANSHARE SOD FARMS. INSTALL PER SOD LAYING NOTES	SOD ROLLS	SOD ROLLS
	DECORATIVE LANDSCAPE BOULDERS SIZE: 2', 3' AND 4' BOULDERS (MATCH/COMPLIMENT DECORATIVE ROCK MULCH IN PLANTING AREAS)	PER PLAN	PER PLAN

In Site DESIGN GROUP
Landscape Architecture Land Planning
17 North 470 West American Fork, Utah 84003
801.756.5043 www.in-sitedesigngroup.com





20' 0 20' 40' 60'

SCALE: 1"=20'-0" ON 30X42 SHEET

bhd ARCHITECTS
www.bhdarchitects.com
Phone 801.571.0010
Fax 801.571.0303
Toll Free 888.571.0010
65 East Wadsworth Park Drive
Suite 205 Draper, Utah 84020

LICENSED LANDSCAPE ARCHITECT # 4884514 Cory B. Whiting 8-15-2024 STATE OF UTAH

THE CHURCH OF JESUS CHRIST OF LATTER-DAY SAINTS

Orem YSA 3rd 10 Ward Building
Orem UT YSA 3rd Stake

Approx. 1700 West 575 South
Vineyard, Utah 84059

Owner #: 3/50-1876
Plan Series: 2024 10 Ward SC
County Parcel: 37:220:0001
BID #: 2344
Date: 15 Aug 2024

Drawing Issue and Revision Schedule

#	Date	Description
1	15 Nov 2019	Bid Documents

LANDSCAPE PLAN

LS102

Printed: 14 Aug 2024 5:20 PM

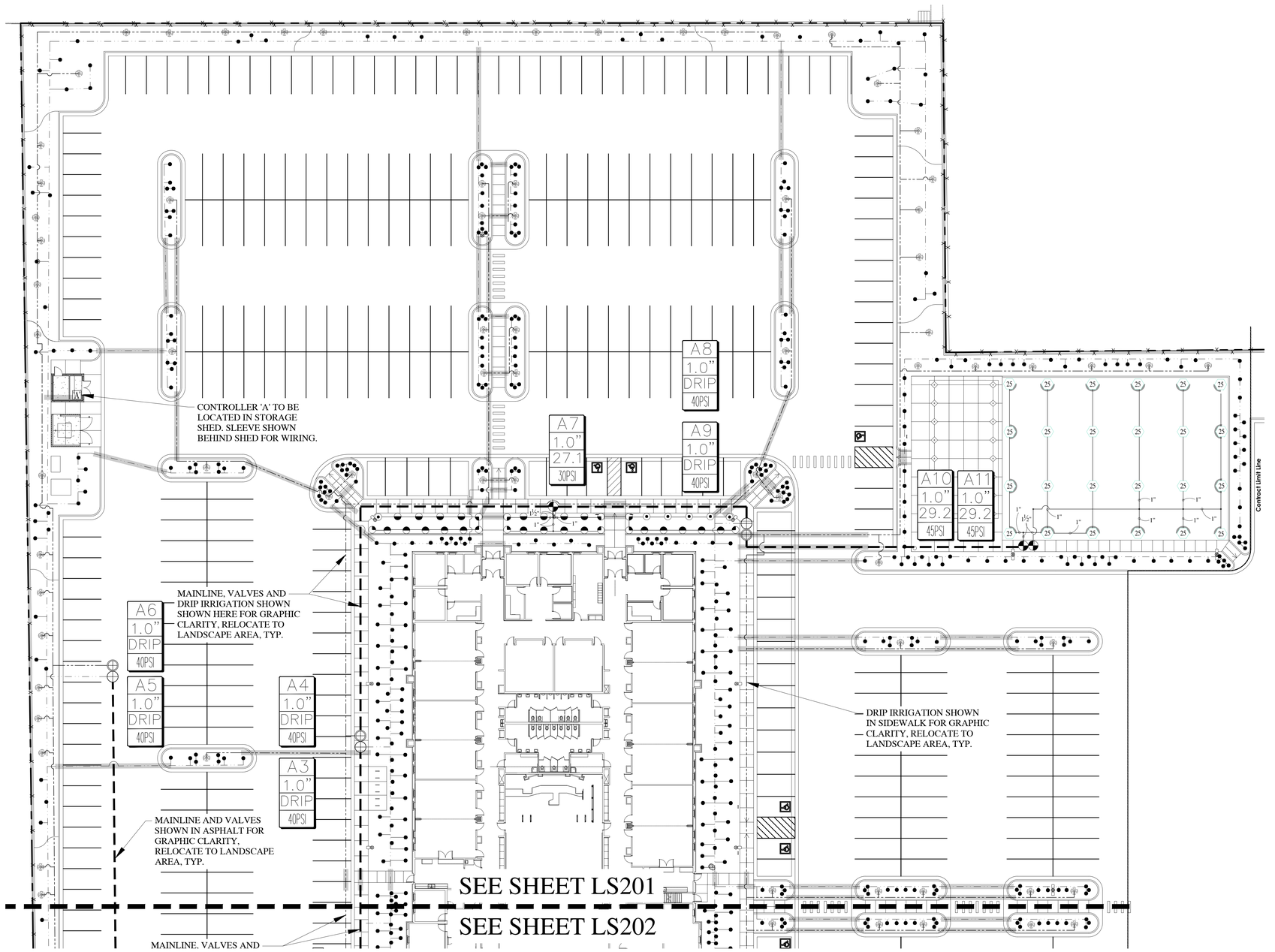

IRRIGATION NOTES

1. ALL WORK SHALL BE IN ACCORDANCE WITH APPLICABLE CITY AND/OR COUNTY CODES. THE CONTRACTOR SHALL APPLY AND PAY FOR ALL NECESSARY PERMITS.
2. CONTRACTOR SHALL HAVE ALL UTILITIES BLUE STAKED BEFORE DIGGING. ANY DAMAGE TO THE UTILITIES SHALL BE REPAIRED AT THE EXPENSE OF CONTRACTOR WITH NO EXTRA COST TO THE OWNER.
3. PROVIDE AN AS-BUILT, REPRODUCIBLE DRAWING TO OWNER SHOWING ALL DRAINS, HEADS, VALVES, AND PIPES. PROVIDE INSTRUCTIONS TO MAINTENANCE PERSONNEL FOR WINTERIZATION. SPRINKLER SYSTEM TO BE BLOWN OUT WITH AN AIR COMPRESSOR EACH FALL.
4. CONTRACTOR IS RESPONSIBLE FOR ENSURING ACCURATE COUNTS AND QUANTITIES OF ALL IRRIGATION MATERIALS FOR BIDDING AND INSTALLATION PURPOSES.
5. CONTRACTOR SHALL BUILD IRRIGATION SYSTEM WITH HEAD TO HEAD COVERAGE FOR ALL LAWN AREAS. HE-VAN AND/OR U-SERIES NOZZLES SHALL BE USED WHERE NECESSARY TO PROVIDED HEAD TO HEAD COVERAGE AND/OR TO MINIMIZE OVER SPRAY ONTO STREETS, SIDEWALKS AND/OR BUILDINGS.
6. LANDSCAPE CONTRACTOR (L.C.) SHALL PROVIDE AND INSTALL SLEEVES FOR ALL PIPES AND WIRES UNDER PAVEMENT AND SIDEWALKS. SLEEVES SHALL BE 2 SIZES LARGER THAN PIPE INSIDE. ALL WIRE SHALL BE IN SEPARATE SLEEVES (NOT SHOWN). PLACE JUNCTION BOXES WHERE NECESSARY TO MINIMIZE LONG RUNS OR AT DIRECTIONAL CHANGES AS NECESSARY.
7. ALL SLEEVES INSTALLED SHALL BE DUCT TAPED TO PREVENT DIRT OR OTHER DEBRIS ENTERING PIPE. ALL SLEEVES SHALL BE IDENTIFIED BY WOOD OR PVC STAKES AND BE SPRAY PAINTED WITH MARKING PAINT. REMOVE STAKES ONCE IRRIGATION SYSTEM IS COMPLETE.
8. MAIN LINE SHALL BE 1.5" (UNLESS OTHERWISE DIRECTED). LATERAL LINES SHALL BE NO SMALLER THAN 1". PIPES SHALL CARRY NO MORE THAN THE FOLLOWING: 1" PIPE MAX. 13 GPM, 1-1/2" PIPE MAX. 30 GPM. ADJUST LOCATION OF MAINLINE AND LATERAL LINES AS NECESSARY IN ORDER TO AVOID PLACING BOULDERS, TREES AND SHRUBS DIRECTLY OVER MAINLINE AND LATERAL LINES.
9. MAIN LINES SHALL BE 18" DEEP MIN. AND LATERAL LINES 12" DEEP MIN. NO ROCK GREATER THAN 3/4" DIAMETER SHALL BE ALLOWED IN TRENCHES.
10. PLACE PIPES, VALVE BOXES AND ALL OTHER SPRINKLER CONSTRUCTION IN LANDSCAPE AREAS. ALL PIPES SHALL BE ON PROPERTY OF OWNER. MODIFY LOCATION OF VALVE BOXES AS NECESSARY IN ORDER TO AVOID TREES AND SHRUBS PER PLANTING PLAN. USE GREEN BOXES IN LAWN AREAS. USE TAN BOXES IN BED AREAS.
11. LANDSCAPE ARCHITECT SHALL VISUALLY INSPECT ALL TRENCHES PRIOR TO BACKFILLING. CONTRACTOR SHALL GIVE LANDSCAPE ARCHITECT MIN. 72 HR. NOTICE BEFORE INSPECTION IS TO BE MADE. CONTRACTOR SHALL PRESSURE TEST MAINLINE FOR LEAKS PRIOR TO BACKFILLING.
12. ALL SPRINKLERS SHALL BE ADJUSTED ON-SITE AS NECESSARY TO AVOID ANY WATER SPRAYING ONTO STREETS, SIDEWALKS AND/OR BUILDINGS.
13. ACTUAL INSTALLATION OF IRRIGATION SYSTEM MAY VARY SOMEWHAT FROM PLANS. CONTRACTOR IS RESPONSIBLE TO MAKE NECESSARY ADJUSTMENTS TO ENSURE PROPER COVERAGE OF ALL LANDSCAPED AREAS.
14. LANDSCAPE CONTRACTOR SHALL MATCH PRECIPITATION RATES AS MUCH AS POSSIBLE FOR ALL LANDSCAPED AREAS.
15. INSTALL ALL HEADS 2" AWAY FROM ALL WALKS AND WALLS. VALVE BOXES SHALL BE INSTALLED SQUARED TO AND 6" MIN. AWAY FROM WALKS AND WALLS.
16. CONTRACTOR TO INSTALL NETAFIM TECHLINE CV TUBING ON SURFACE DRIP LINE FOR TREES.
17. POWER TO CONTROLLER TO BE PROVIDED BY ELECTRICAL CONTRACTOR. OWNER TO SPECIFY EXACT LOCATION OF CONTROLLER. IF MOUNTED OUTSIDE, CONTROLLER TO BE MOUNTED IN WEATHERPROOF LOCKING WALL MOUNTED CABINET PER MANUFACTURERS INSTRUCTIONS. LANDSCAPE CONTRACTOR SHALL ENSURE THE CONTROLLER IS GROUNDED PER LOCAL CODE AND PER MANUFACTURER SPEC.
18. IF THE STATIC PRESSURE AT THE POINT OF CONNECTION EXCEEDS 100 PSI, INSTALL A BRASS PRESSURE REDUCER IN-LINE WITH THE RPZ PER MANUFACTURER SPECS. INSTALL THE RPZ AND PRESSURE REDUCER IN A LOCKING METAL CABINET. ADJUST PRESSURE AS REQUIRED FOR NORMAL OPERATION OF THE IRRIGATION SYSTEM.
19. VALVE CONTROL WIRING SHALL BE 14 GAUGE COPPER SINGLE STRAND WIRE. WIRE SHALL BE WHITE FOR COMMON AND COLOR FOR CONTROL.
20. INSTALL THE PRS-D OPTION FOR SPRAY VALVES IF THE STATIC PRESSURE AT SPRAY HEADS EXCEEDS 70 PSI. INSTALL THE PRS-D OPTION FOR ROTOR VALVES IF THE STATIC PRESSURE AT ROTOR EXCEEDS 75 PSI.

IRRIGATION LEGEND

SYMBOL	MANUFACTURER-MODEL NUMBER	PAT.	RD.	PSI	GPM Q	T	H	IT	TQ	F	DRIP GPH	DETAILS	REMARKS
●	RAINBIRD XB-PC	FULL	--	40	--	--	--	--	--	--	2.0	18	SEE LEGEND BELOW FOR
▨	DRIPLINE: NETAFIM TLCV-09-12	FULL	--	40	--	--	--	--	--	--	.9/12"	15-17	ADDITIONAL INFORMATION
▲	RAIN BIRD 1806-P4S POP-UP ROTARY 18	FULL	13' - 18'	45	.5	--	--	--	--	1.85	--	20-21	ADJUST NOZZLES AS
✕ ✕ ✕ ✕	RAIN BIRD 1806-P4S POP-UP ROTARY 24	Q,H,F	17' - 24'	45	.84	--	1.68	--	--	3.48	--	20-21	NEEDED TO KEEP WATER
● ▬ ●	RAINBIRD 1806-PRS POP-UP W/10 SERIES NOZZLE	Q,T,H	10'	30	.39	.67	.79	--	--	--	--	20-21	OFF SIDEWALK, ASPHALT
● ● ●	RAIN BIRD 5006-PL-R-SS 25 SERIES MPR NOZZLES	Q,H,F	25'	45	1.00	--	1.98	--	--	3.82	--	22-22	AND BUILDING.
'A'	CONTROLLER: WEATHERTRAK ET PRO3 (WTPRO3-C-12-CWM)											5-7	COORDINATE LOCATION WITH OWNER
◉	1" RAINBIRD QUICK COUPLER VALVE, MODEL 44-LRC											10	IN 10" RND. VALVE BOX
◪	1-1/2" WILKENS 375B RPZ BACKFLOW PREVENTOR IN GUARDSHACK ENCLOSURE											4,11	IN STRONGBOX ENCLOSURE
◪	REMOTE CONTROL VALVE: RAINBIRD PEB-PRS-D AUTOMATIC CONTROL VALVE; SIZE PER PLAN											13	JUMBO VALVE BOX
⊞	DRIP CONTROL ZONE KIT: RAINBIRD XCZ-100-PRB-COM PER PLANS											14	JUMBO VALVE BOX
⊞	DRIP CONTROL ZONE KIT: RAINBIRD XCZ-100-PRB-COM PER PLANS (FOR TREES)											14	JUMBO VALVE BOX
⋈	1-1/2" STOP & WASTE TO BE INSTALLED BY GENERAL CONTRACTOR. SEE CIVIL DRAWINGS.											4,11	BY GENERAL CONTRACTOR
⊙	HYDROMETER: NETAFIM LHM15TG1-MEL (WITH PE-39 FLOW SENSOR CABLE PER WEATHERTRAK SPECS.)											4,9,11	REFERENCE DETAILS
⊗	DRAIN VALVE: GRACO WELD TOP											5, 7	REFERENCE DETAILS
▬▬	MAINLINE: 1-1/2" SCH 40 PVC											1, 2	REFERENCE DETAILS
———	LATERAL LINE FOR ROTORS AND/OR SPRAYS: SCHEDULE 40 PVC											1, 2	REFERENCE DETAILS
— — —	TREE DRIP LATERAL LINE (SIZE AS REQUIRED) SCHEDULE 40 PVC											1,2,15,17-18	REFERENCE DETAILS
— · —	SHRUB DRIP LATERAL LINE (SIZE AS REQUIRED) SCHEDULE 40 PVC											1,2,15,17-18	REFERENCE DETAILS
	SLEEVE (SIZE TO MIN. 2X DIA. OF PIPE WITHIN THE SLEEVE). ADD ADDITIONAL SLEEVES AS REQ.											3	REFERENCE DETAILS
NOT SHOWN	WIRE CHASE, SIZE TO BE TWICE THE DIA. OF THE WIRE BUNDLE WITHIN DOWN TO 1" DIA. MIN.											1,2	REFERENCE DETAILS
NOT SHOWN	14 GAUGE SOLID COPPER SINGLE STRAND WIRE.											1,2	REFERENCE DETAILS

DRIP EMITTER LEGEND

PLANT TYPE	EMITTER QTY	EMITTER TYPE
PERENNIALS/GRASSES	1	XB-20 (2GPH)
ALL SHRUBS	1	XB-20 (2GPH)
TREES IN PLANTER AREAS	1	XB-10 (1GPH)

NOTE:
1. EMITTERS LISTED ARE AVAILABLE FROM GPH AND RAINBIRD.
2. EMITTERS ARE NOT NECESSARY FOR TREES IN LAWN AREAS.
3. INSTALL NETAFIM TLCV IN ADDITION TO XB-10 EMITTERS PER DETAILS ON SHEET LS402.

VALVE ID TAG

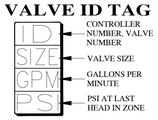

In Site DESIGN GROUP
Landscape Architecture Land Planning
17 North 470 West American Fork, Utah 84003
801.756.5043 www.in-sitedesigngroup.com

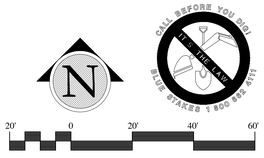

SCALE: 1"=20'-0" ON 30X42 SHEET

bhd ARCHITECTS
www.bhdarchitects.com
Phone 801.571.0010
Fax 801.571.0303
Toll Free 888.571.0010
65 East Wadsworth Park Drive
Suite 205 Draper, Utah 84020



THE CHURCH OF JESUS CHRIST OF LATTER-DAY SAINTS

Orem YSA 3rd 10 Ward Building
Orem UT YSA 3rd Stake

Approx. 1700 West 575 South
Vineyard Utah 84059

Date: 15 Aug 2024
BID #: 2244
County Parcel: 37:228:0001
Plan Series: 2020 10 Ward SC
Owner #: 590-10-6

Drawing Issue and Revision Schedule												
#	Description											
1	15 Nov 2023	Bid Documents										

IRRIGATION PLAN

LS201

Printed: 14 Aug 2024 5:20 PM

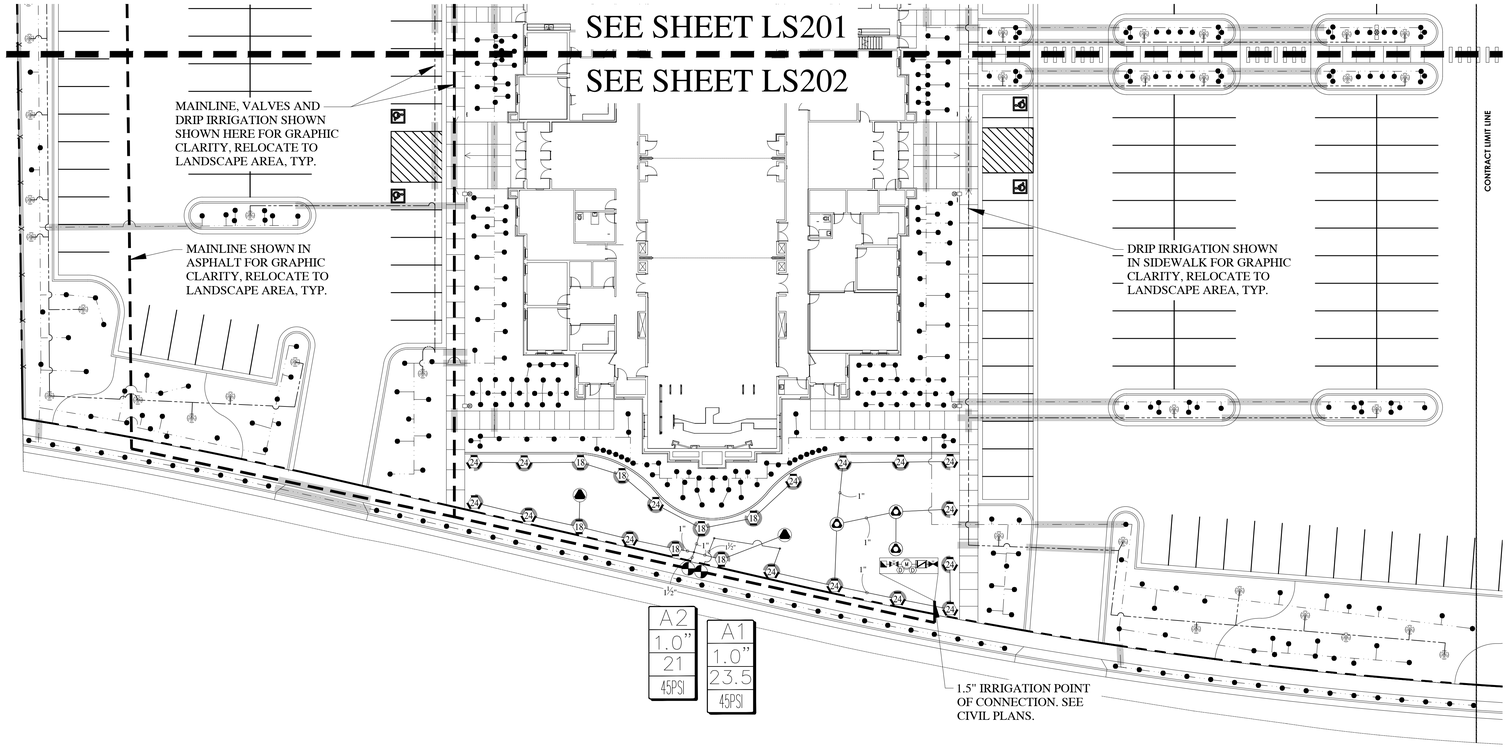

IRRIGATION NOTES

1. ALL WORK SHALL BE IN ACCORDANCE WITH APPLICABLE CITY AND/OR COUNTY CODES. THE CONTRACTOR SHALL APPLY AND PAY FOR ALL NECESSARY PERMITS.
2. CONTRACTOR SHALL HAVE ALL UTILITIES BLUE STAKED BEFORE DIGGING. ANY DAMAGE TO THE UTILITIES SHALL BE REPAIRED AT THE EXPENSE OF CONTRACTOR WITH NO EXTRA COST TO THE OWNER.
3. PROVIDE AN AS-BUILT, REPRODUCIBLE DRAWING TO OWNER SHOWING ALL DRAINS, HEADS, VALVES, AND PIPES. PROVIDE INSTRUCTIONS TO MAINTENANCE PERSONNEL FOR WINTERIZATION. SPRINKLER SYSTEM TO BE BLOWN OUT WITH AN AIR COMPRESSOR EACH FALL.
4. CONTRACTOR IS RESPONSIBLE FOR ENSURING ACCURATE COUNTS AND QUANTITIES OF ALL IRRIGATION MATERIALS FOR BIDDING AND INSTALLATION PURPOSES.
5. CONTRACTOR SHALL BUILD IRRIGATION SYSTEM WITH HEAD TO HEAD COVERAGE FOR ALL LAWN AREAS. HE-VAN AND/OR U-SERIES NOZZLES SHALL BE USED WHERE NECESSARY TO PROVIDED HEAD TO HEAD COVERAGE AND/OR TO MINIMIZE OVER SPRAY ONTO STREETS, SIDEWALKS AND/OR BUILDINGS.
6. LANDSCAPE CONTRACTOR (L.C.) SHALL PROVIDE AND INSTALL SLEEVES FOR ALL PIPES AND WIRES UNDER PAVEMENT AND SIDEWALKS. SLEEVES SHALL BE 2 SIZES LARGER THAN PIPE INSIDE. ALL WIRE SHALL BE IN SEPARATE SLEEVES (NOT SHOWN). PLACE JUNCTION BOXES WHERE NECESSARY TO MINIMIZE LONG RUNS OR AT DIRECTIONAL CHANGES AS NECESSARY.
7. ALL SLEEVES INSTALLED SHALL BE DUCT TAPED TO PREVENT DIRT OR OTHER DEBRIS ENTERING PIPE. ALL SLEEVES SHALL BE IDENTIFIED BY WOOD OR PVC STAKES AND BE SPRAY PAINTED WITH MARKING PAINT. REMOVE STAKES ONCE IRRIGATION SYSTEM IS COMPLETE.
8. MAIN LINE SHALL BE 1.5" (UNLESS OTHERWISE DIRECTED). LATERAL LINES SHALL BE NO SMALLER THAN 1". PIPES SHALL CARRY NO MORE THAN THE FOLLOWING: 1" PIPE MAX. 13 GPM, 1-1/2" PIPE MAX. 30 GPM. ADJUST LOCATION OF MAINLINE AND LATERAL LINES AS NECESSARY IN ORDER TO AVOID PLACING BOULDERS, TREES AND SHRUBS DIRECTLY OVER MAINLINE AND LATERAL LINES.
9. MAIN LINES SHALL BE 18" DEEP MIN. AND LATERAL LINES 12" DEEP MIN. NO ROCK GREATER THAN 3/4" DIAMETER SHALL BE ALLOWED IN TRENCHES.
10. PLACE PIPES, VALVE BOXES AND ALL OTHER SPRINKLER CONSTRUCTION IN LANDSCAPE AREAS. ALL PIPES SHALL BE ON PROPERTY OF OWNER. MODIFY LOCATION OF VALVE BOXES AS NECESSARY IN ORDER TO AVOID TREES AND SHRUBS PER PLANTING PLAN. USE GREEN BOXES IN LAWN AREAS. USE TAN BOXES IN BED AREAS.
11. LANDSCAPE ARCHITECT SHALL VISUALLY INSPECT ALL TRENCHES PRIOR TO BACKFILLING. CONTRACTOR SHALL GIVE LANDSCAPE ARCHITECT MIN. 72 HR. NOTICE BEFORE INSPECTION IS TO BE MADE. CONTRACTOR SHALL PRESSURE TEST MAINLINE FOR LEAKS PRIOR TO BACKFILLING.
12. ALL SPRINKLERS SHALL BE ADJUSTED ON-SITE AS NECESSARY TO AVOID ANY WATER SPRAYING ONTO STREETS, SIDEWALKS AND/OR BUILDINGS.
13. ACTUAL INSTALLATION OF IRRIGATION SYSTEM MAY VARY SOMEWHAT FROM PLANS. CONTRACTOR IS RESPONSIBLE TO MAKE NECESSARY ADJUSTMENTS TO ENSURE PROPER COVERAGE OF ALL LANDSCAPED AREAS.
14. LANDSCAPE CONTRACTOR SHALL MATCH PRECIPITATION RATES AS MUCH AS POSSIBLE FOR ALL LANDSCAPED AREAS.
15. INSTALL ALL HEADS 2" AWAY FROM ALL WALKS AND WALLS. VALVE BOXES SHALL BE INSTALLED SQUARED TO AND 6" MIN. AWAY FROM WALKS AND WALLS.
16. CONTRACTOR TO INSTALL NETAFIM TECHLINE CV TUBING ON-SURFACE DRIP LINE FOR TREES.
17. POWER TO CONTROLLER TO BE PROVIDED BY ELECTRICAL CONTRACTOR. OWNER TO SPECIFY EXACT LOCATION OF CONTROLLER. IF MOUNTED OUTSIDE, CONTROLLER TO BE MOUNTED IN WEATHERPROOF LOCKING WALL MOUNTED CABINET PER MANUFACTURERS INSTRUCTIONS. LANDSCAPE CONTRACTOR SHALL ENSURE THE CONTROLLER IS GROUNDED PER LOCAL CODE AND PER MANUFACTURER SPEC.
18. IF THE STATIC PRESSURE AT THE POINT OF CONNECTION EXCEEDS 100 PSI, INSTALL A BRASS PRESSURE REDUCER IN-LINE WITH THE RPZ PER MANUFACTURER SPECS. INSTALL THE RPZ AND PRESSURE REDUCER IN A LOCKING METAL CABINET. ADJUST PRESSURE AS REQUIRED FOR NORMAL OPERATION OF THE IRRIGATION SYSTEM.
19. VALVE CONTROL WIRING SHALL BE 14 GAUGE COPPER SINGLE STRAND WIRE. WIRE SHALL BE WHITE FOR COMMON AND COLOR FOR CONTROL.
20. INSTALL THE PRS-D OPTION FOR SPRAY VALVES IF THE STATIC PRESSURE AT SPRAY HEADS EXCEEDS 70 PSI. INSTALL THE PRS-D OPTION FOR ROTOR VALVES IF THE STATIC PRESSURE AT ROTOR EXCEEDS 75 PSI.

IRRIGATION LEGEND

SYMBOL	MANUFACTURER-MODEL NUMBER	PAT.	RD.	PSI	GPM Q	GPM T	GPM H	GPM TT	GPM TQ	GPM F	DRIP GPH	DETAILS	REMARKS
●	RAINBIRD XB-PC	FULL	--	40	--	--	--	--	--	--	2.0	18	SEE LEGEND BELOW FOR
	DRIPLINE: NETAFIM TLCV-09-12	FULL	--	40	--	--	--	--	--	--	.9/12"	15-17	ADDITIONAL INFORMATION.
	RAIN BIRD 1806-P4S POP-UP ROTARY 18	FULL	13' - 18'	45	.5	--	--	--	--	1.85	--	20-21	ADJUST NOZZLES AS
	RAIN BIRD 1806-P4S POP-UP ROTARY 24	Q,H,F	17' - 24'	45	.84	--	1.68	--	--	3.48	--	20-21	NEEDED TO KEEP WATER
	RAINBIRD 1806-PRS POP-UP W/10 SERIES NOZZLE	Q,T,H	10'	30	.39	.67	.79	--	--	--	--	20-21	OFF SIDEWALK, ASPHALT
	RAIN BIRD 5006-PL-R-SS 25 SERIES MPR NOZZLES	Q,H,F	25'	45	1.00	--	1.98	--	--	3.82	--	22-22	AND BUILDING.
A1	CONTROLLER: WEATHERTRAK ET PRO3 (WTPRO3-C-12-CWM)											5-7	COORDINATE LOCATION WITH OWNER
	1" RAINBIRD QUICK COUPLER VALVE, MODEL 44-LRC											10	IN 10" RND. VALVE BOX
	1-1/2" WILKENS 375B RPZ BACKFLOW PREVENTOR IN GUARDSHACK ENCLOSURE											4,11	IN STRONGBOX ENCLOSURE
	REMOTE CONTROL VALVE: RAINBIRD PEB-PRS-D AUTOMATIC CONTROL VALVE; SIZE PER PLAN											13	JUMBO VALVE BOX
	DRIP CONTROL ZONE KIT: RAINBIRD XCZ-100-PRB-COM PER PLANS											14	JUMBO VALVE BOX
	DRIP CONTROL ZONE KIT: RAINBIRD XCZ-100-PRB-COM PER PLANS (FOR TREES)											14	JUMBO VALVE BOX
	1-1/2" STOP & WASTE TO BE INSTALLED BY GENERAL CONTRACTOR. SEE CIVIL DRAWINGS.											4,11	BY GENERAL CONTRACTOR
	HYDROMETER: NETAFIM LHM15TG1-MEL (WITH PE-39 FLOW SENSOR CABLE PER WEATHERTRAK SPECS.)											4,9,11	REFERENCE DETAILS
	DRAIN VALVE: GRACO WELD TOP											5, 7	REFERENCE DETAILS
	MAINLINE: 1-1/2" SCH 40 PVC											1, 2	REFERENCE DETAILS
	LATERAL LINE FOR ROTORS AND/OR SPRAYS: SCHEDULE 40 PVC											1, 2	REFERENCE DETAILS
	TREE DRIP LATERAL LINE (SIZE AS REQUIRED) SCHEDULE 40 PVC											1,2,15,17-18	REFERENCE DETAILS
	SHRUB DRIP LATERAL LINE (SIZE AS REQUIRED) SCHEDULE 40 PVC											1,2,15,17-18	REFERENCE DETAILS
	SLEEVE (SIZE TO MIN. 2X DIA. OF PIPE WITHIN THE SLEEVE). ADD ADDITIONAL SLEEVES AS REQ.											3	REFERENCE DETAILS
NOT SHOWN	WIRE CHASE. SIZE TO BE TWICE THE DIA. OF THE WIRE BUNDLE WITHIN DOWN TO 1" DIA. MIN.											1,2	REFERENCE DETAILS
NOT SHOWN	14 GAUGE SOLID COPPER SINGLE STRAND WIRE.											1,2	REFERENCE DETAILS

DRIP EMITTER LEGEND

PLANT TYPE	EMITTER QTY	EMITTER TYPE
PERENNIALS/GRASSES	1	XB-20 (2GPH)
ALL SHRUBS	1	XB-20 (2GPH)
TREES IN PLANTER AREAS	1	XB-10 (1GPH)

NOTE:
1. EMITTERS LISTED ARE AVAILABLE FROM GPH AND RAINBIRD.
2. EMITTERS ARE NOT NECESSARY FOR TREES IN LAWN AREAS.
3. INSTALL NETAFIM TLCV IN ADDITION TO XB-10 EMITTERS PER DETAILS ON SHEET LS402.

VALVE ID TAG

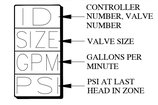

In Site DESIGN GROUP
Landscape Architecture Land Planning
17 North 470 West American Fork, Utah 84003
801.756.5043 www.insitedesigngroup.com

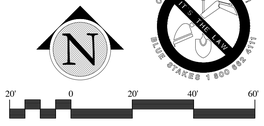

20' 0 20' 40' 60'

SCALE: 1"=20'-0" ON 30X42 SHEET

bhd ARCHITECTS
www.bhdarchitects.com
Phone 801.571.0010
Fax 801.571.0303
Toll Free 888.571.0010
65 East Wadsworth Park Drive
Suite 205 Draper, Utah 84020

LICENSED LANDSCAPE ARCHITECT # 4884514 Cory B. Whiting 8-15-2024 STATE OF UTAH

THE CHURCH OF JESUS CHRIST OF LATTER-DAY SAINTS

Orem YSA 3rd 10 Ward Building
Orem UT YSA 3rd Stake

Approx. 1700 West 575 South
Vineyard, Utah 84059

Date: 15 Aug 2024
BHD #: 2244
County Parcel: 37:220:0001
Plan Series: 2024 10 Ward SC
Owner #: 390-1876

Drawing Issue and Revision Schedule

#	Date	Description
1	15 Nov 2019	Bid Documents

IRRIGATION PLAN

LS202

Printed: 14 Aug 2024 5:20 PM

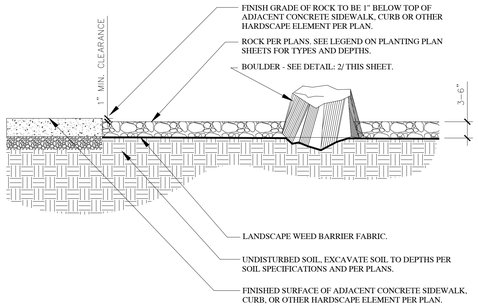

NOTES:
1. ROCK SHALL BE SCREENED & DOUBLE WASHED AND BE FREE OF DEBRIS PRIOR TO INSTALLATION. IF ROCK SUPPLIER DOES NOT HAVE A WASH PLANT, THE LANDSCAPE CONTRACTOR SHALL STILL BE RESPONSIBLE FOR DOUBLE WASHING ALL ROCK AND BOULDERS PRIOR TO INSTALLATION.
2. INSTALL PRE-EMERGENT HERBICIDE TO THE TOP OF THE FABRIC AFTER INSTALLING PLANTS AND PRIOR TO INSTALLING MULCH. AFTER INSTALLATION OF THE MULCH THE CONTRACTOR SHALL EVENLY BROADCAST A SECOND APPLICATION OF SLOW-RELEASE PRE-EMERGENT HERBICIDE. APPLY PRE-EMERGENT HERBICIDE PER MANUFACTURERS RECOMMENDATIONS.
3. KEEP TOP OF ROCK 1"-1½" BELOW ADJACENT WALKS AND CURBS. DO NOT ALLOW ROCK TO TOUCH THE TRUNK OF ANY PLANT. INSTALL ROCK AFTER INSTALLATION OF WEED BARRIER FABRIC AND PLANT MATERIAL.
4. CONTRACTOR TO ENSURE THAT TOP OF WEED BARRIER FABRIC IS FREE OF SOILS AND DEBRIS PRIOR TO PLACING ROCK.
5. SEE LANDSCAPE PLANS FOR ROCK TYPE AND DEPTH.

WEED FABRIC NOTE:
INSTALL 6" SOIL STAPLE IN WEED BARRIER FABRIC AT 5' O.C. TRIANGULAR SPACING. INSTALL 6" SOIL STAPLE AT 12" O.C. ALONG ALL WEED BARRIER FABRIC SEAMS. OVERLAP FABRIC MIN. OF 6" AT ALL SEAMS AS SHOWN BELOW. INSTALL SOIL STAPLE 6' O.C. ALONG EDGES & 2 AT EACH CORNER.

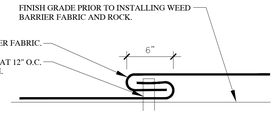

1 ROCK AND WEED BARRIER FABRIC WITH BOULDER
SCALE: NTS

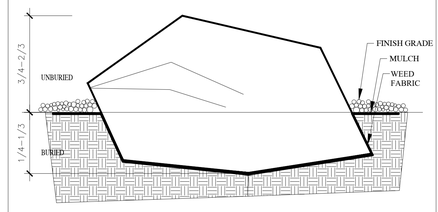

2 BOULDER PLACEMENT DETAIL
SCALE: NTS

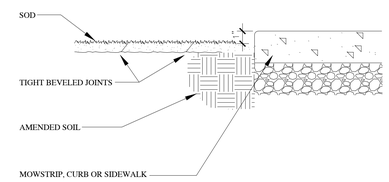

3 SOD INSTALLATION
SCALE: NTS

NOTES:
1. MOWSTRIP TO BE CAST-IN-PLACE AND POURED USING TYPICAL WEIGHT STRUCTURAL CONCRETE.
2. CONTRACTOR TO ENSURE POSITIVE DRAINAGE AROUND MOWSTRIPS-DO NOT CREATE A DAM EFFECT WITH PLACEMENT OF MOWSTRIP.
3. MAXIMUM 1/2" WIDTH VARIATION.
4. PRECISELY FOLLOW LAYOUT AS SHOWN ON MOWSTRIP/EDGING PLAN.

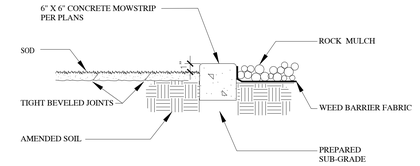

4 CONCRETE MOWSTRIP
SCALE: NTS

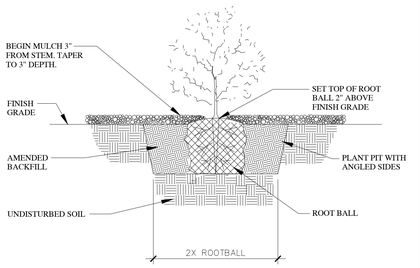

5 SHRUB PLANTING
SCALE: NTS

NOTE:
DO NOT USE ROCK MULCH IN LAWN AREAS.

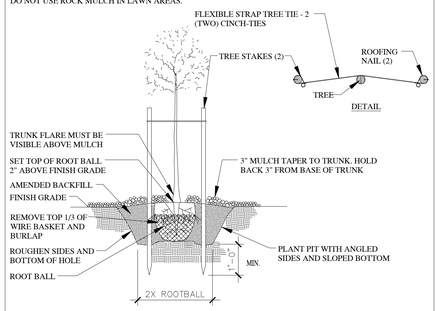

6 TREE PLANTING AND STAKING
SCALE: NTS

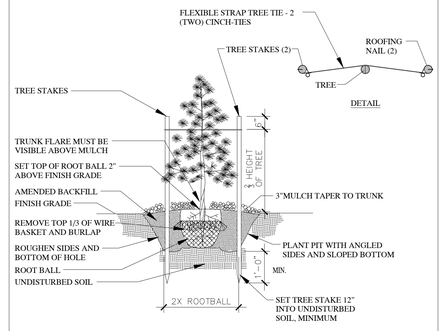

7 CONIFER PLANTING AND STAKING
SCALE: NTS

bhd ARCHITECTS
www.bhdarchitects.com
Phone 801.571.0010
Fax 801.571.0303
Toll Free 888.571.0010
65 East Wadsworth Park Drive
Suite 205 Draper, Utah 84020

LICENSED LANDSCAPE ARCHITECT # 4884514 Cory B. Whiting 8-15-2024 STATE OF UTAH

THE CHURCH OF JESUS CHRIST OF LATTER-DAY SAINTS

Orem YSA 3rd 10 Ward Building
Orem UT YSA 3rd Stake

Approx. 1700 West 575 South
Vineyard, Utah 84059

Date: 13 Aug 2024
BHD #: 2244
County Parcel: 37:220:0001
Plan Series: 2024 10 Ward SC
Owner #: 3PS18PX

Drawing Issue and Revision Schedule		
#	Date	Description
1	15 Nov 2019	Bid Documents

LANDSCAPE DETAILS

LS301

CALL BEFORE YOU DIG 811 BLUE STAKES 1 800 662 4111

In Site DESIGN GROUP
Landscape Architecture Land Planning
17 North 470 West American Fork, Utah 84003
801.756.5043 www.in-sitedesigngroup.com

Printed: 14 Aug 2024 5:20 PM

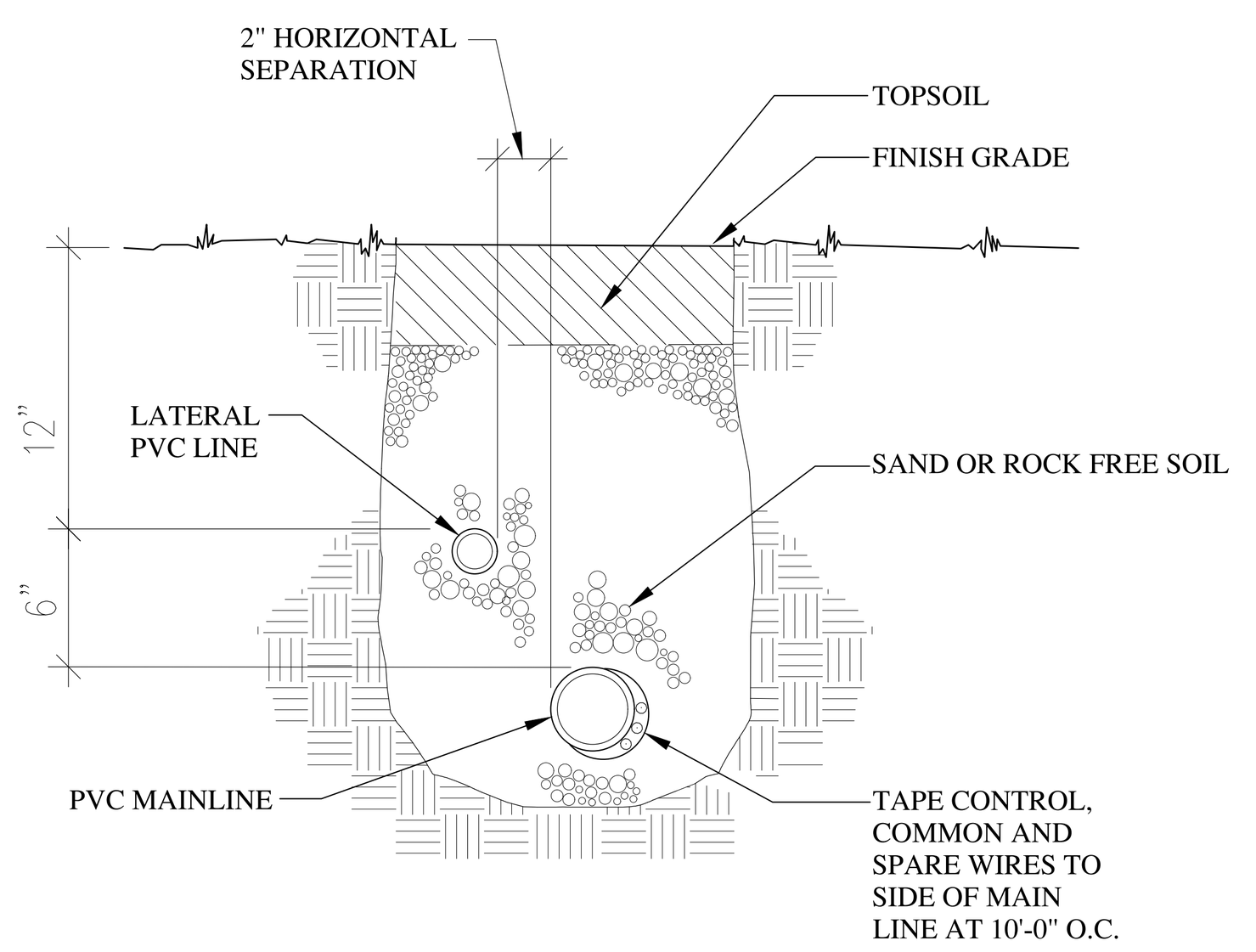

1 TRENCH SECTION - CONVENTIONAL WIRE SYS.
SCALE: NTS

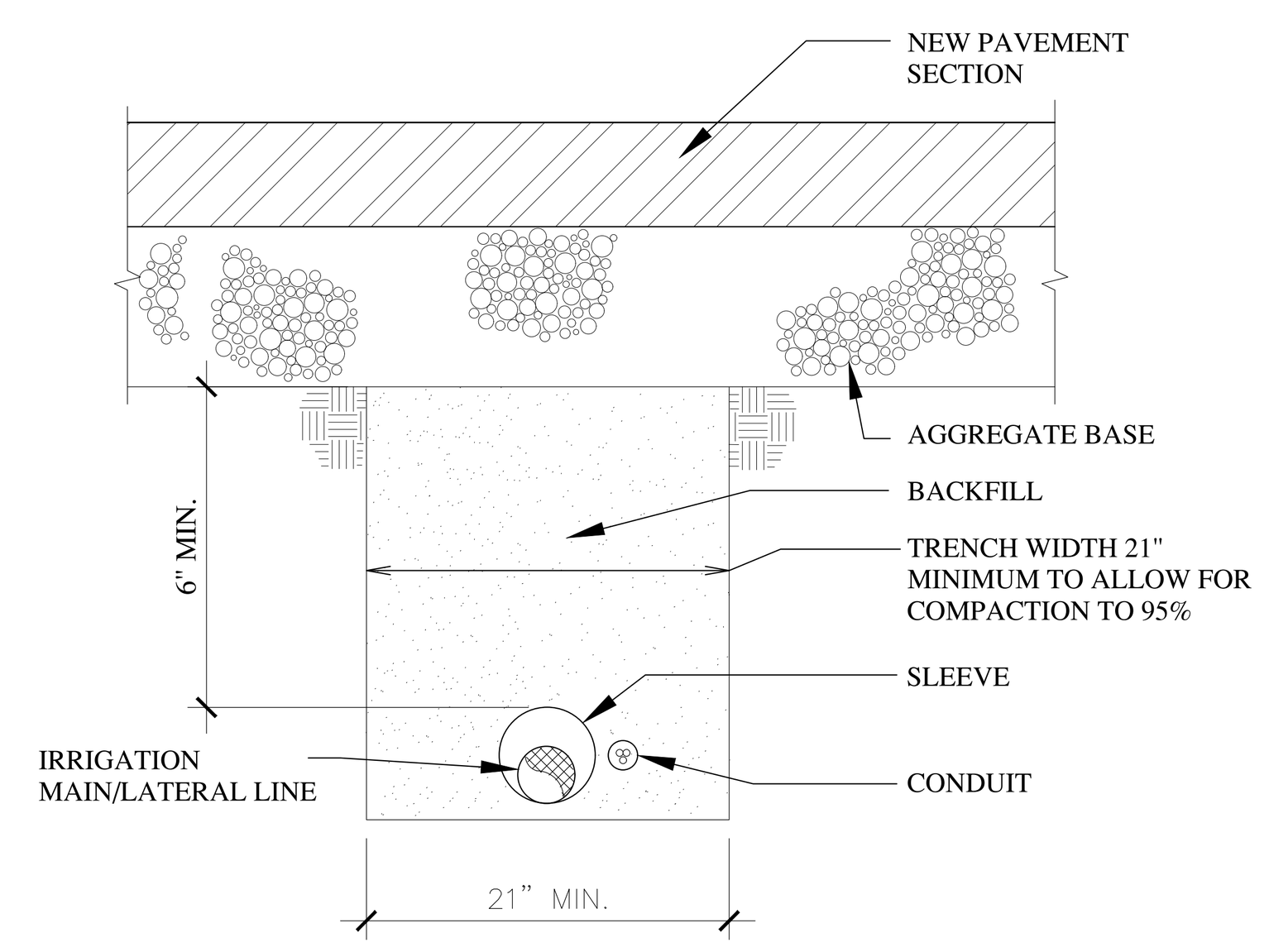

2 MISC. PIPE TRENCH: NEW PAVEMENT AREAS
SCALE: NTS

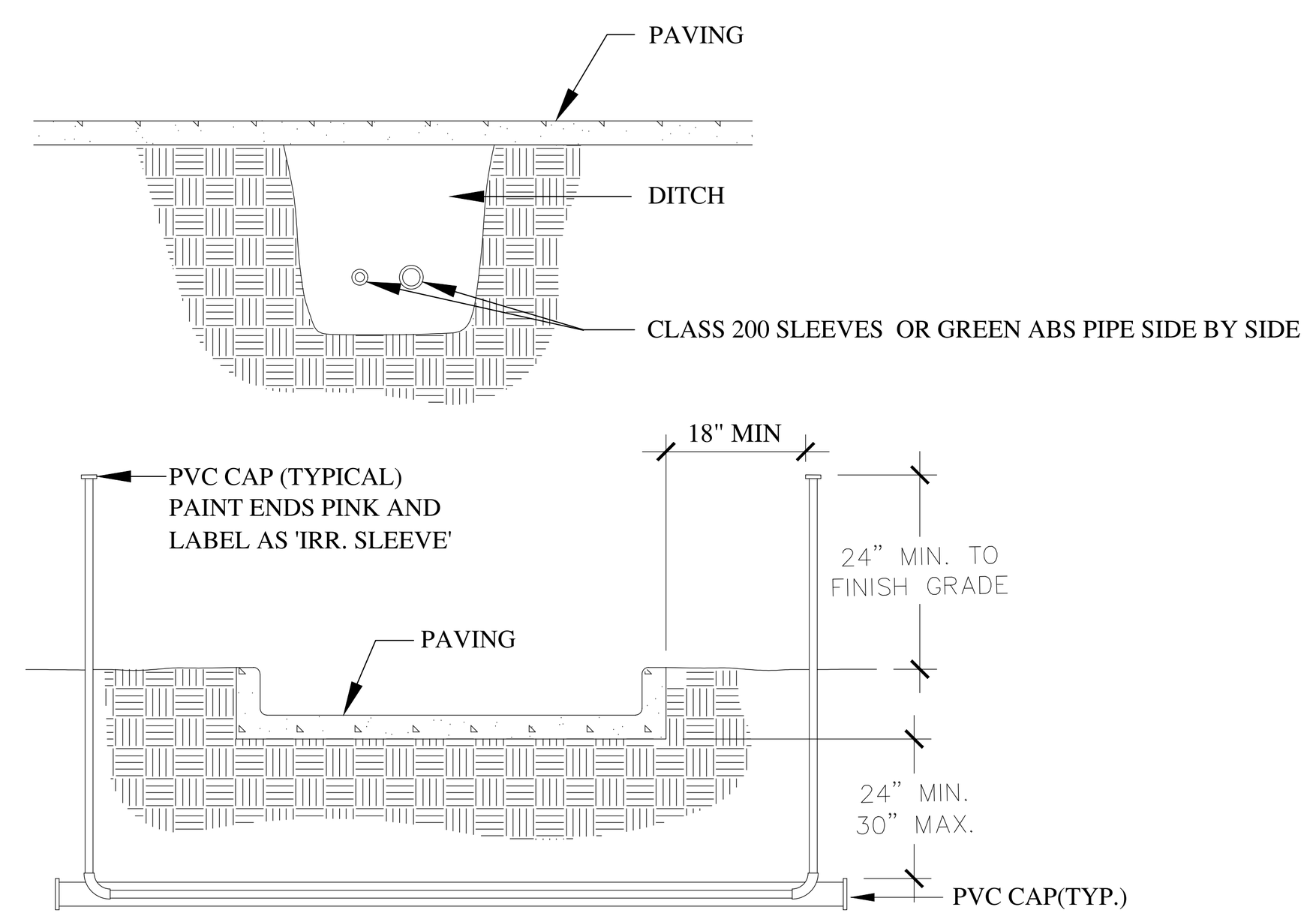

NOTE:
1. WHERE THERE IS MORE THAN ONE SLEEVE, EXTEND THE SMALLER SLEEVE TO 24-INCHES MINIMUM ABOVE FINISH GRADE.
2. ALL SLEEVES INSTALLED SHALL BE DUCT TAPED TO PREVENT DIRT OR OTHER DEBRIS ENTERING PIPE. ALL SLEEVES SHALL BE IDENTIFIED BY WOOD OR PVC STAKES AND BE SPRAY PAINTED WITH MARKING PAINT. REMOVE STAKES ONCE IRRIGATION SYSTEM IS COMPLETE.

3 SLEEVING
SCALE: NTS

NOTE:
INSTALL ISOLATION VALVE AFTER THE HYDROMETER AND BEFORE THE QUICK COUPLER. THE HYDROMETER IS TO BE DRAINED MANUALLY.

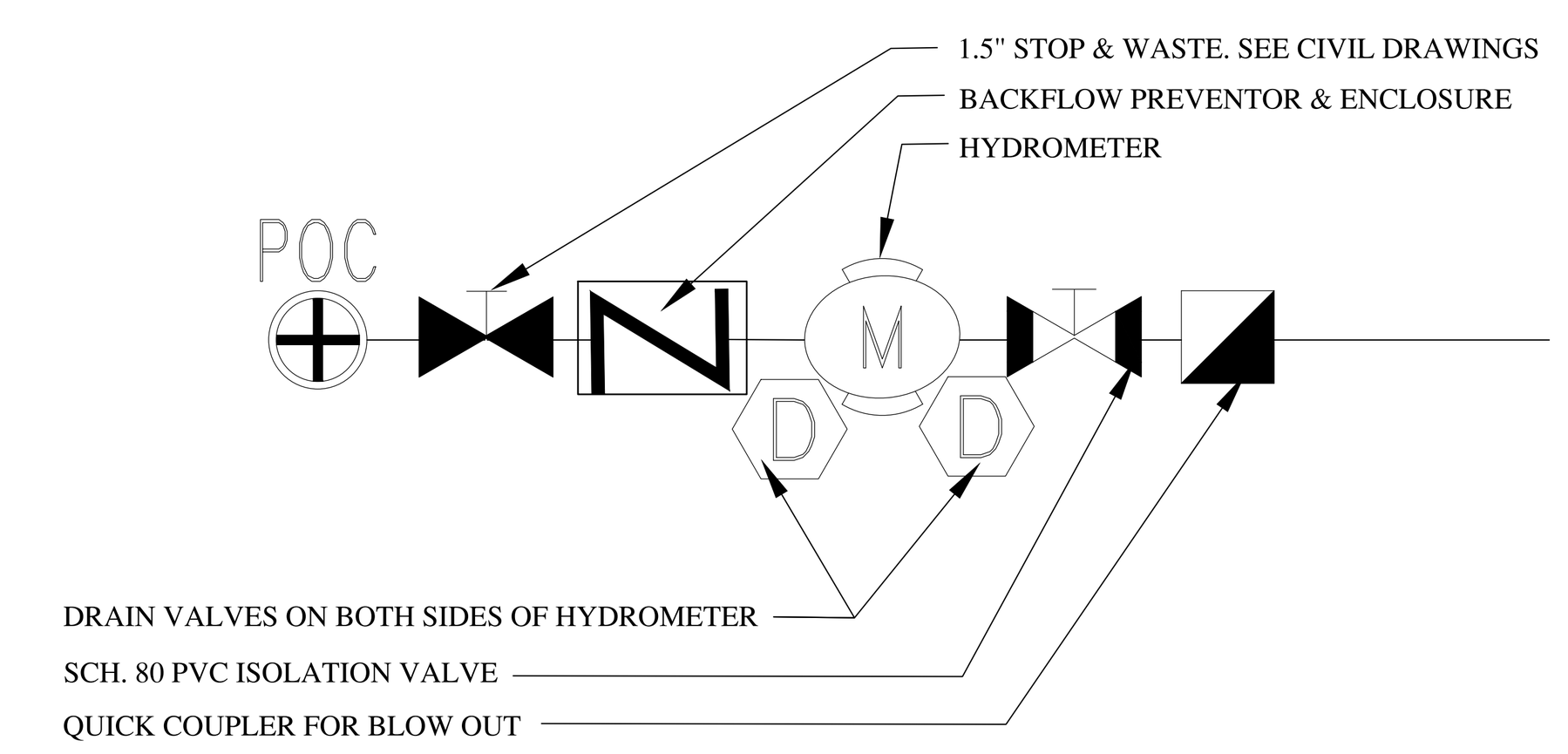

4 1.5" POC W/BACKFLOW SCHEMATIC LAYOUT
SCALE: NTS

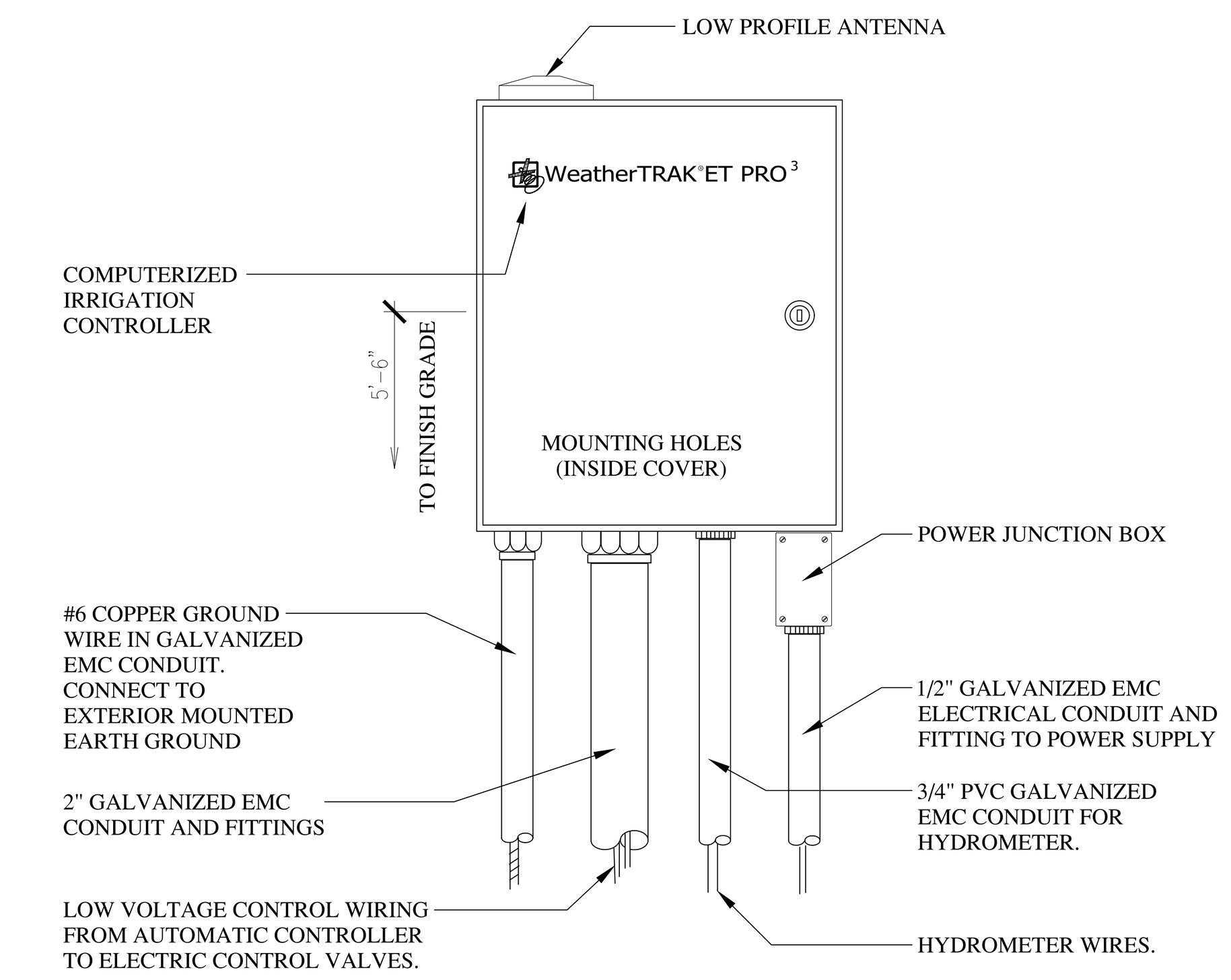

5 SMART CONTROLLER - WEATHER TRAK
SCALE: NTS

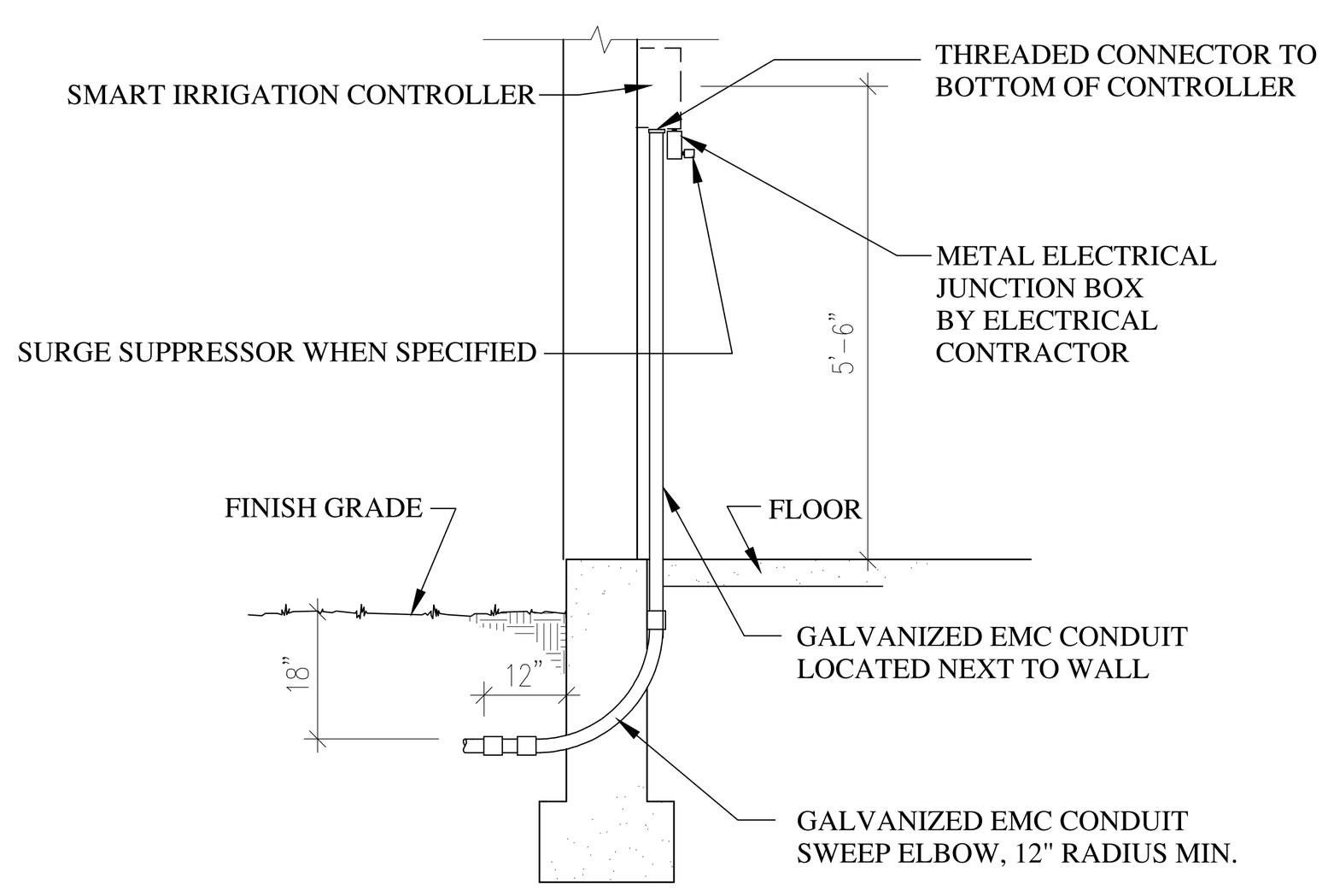

6 IRRIGATION CONTROLLER - INTERIOR MOUNT
SCALE: NTS

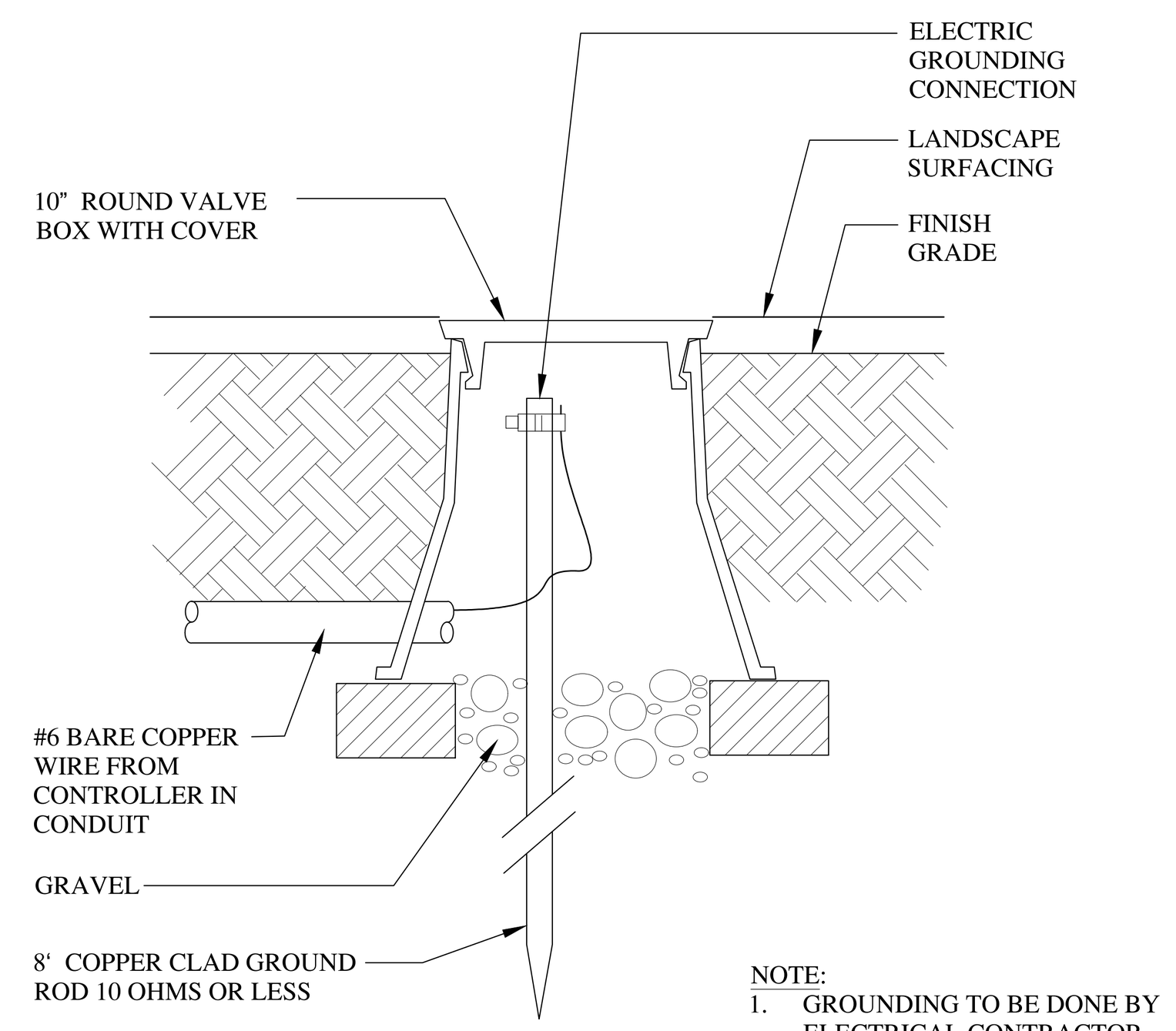

NOTE:
1. GROUNDING TO BE DONE BY ELECTRICAL CONTRACTOR.
2. SEE ELECTRICAL PLANS.

7 LIGHTNING GROUNDING ROD
SCALE: NTS

NOTE:
- DRAIN INTO CENTER OF GRAVEL SUMP
- USE AT EVERY LOW SPOT ON MAINLINE

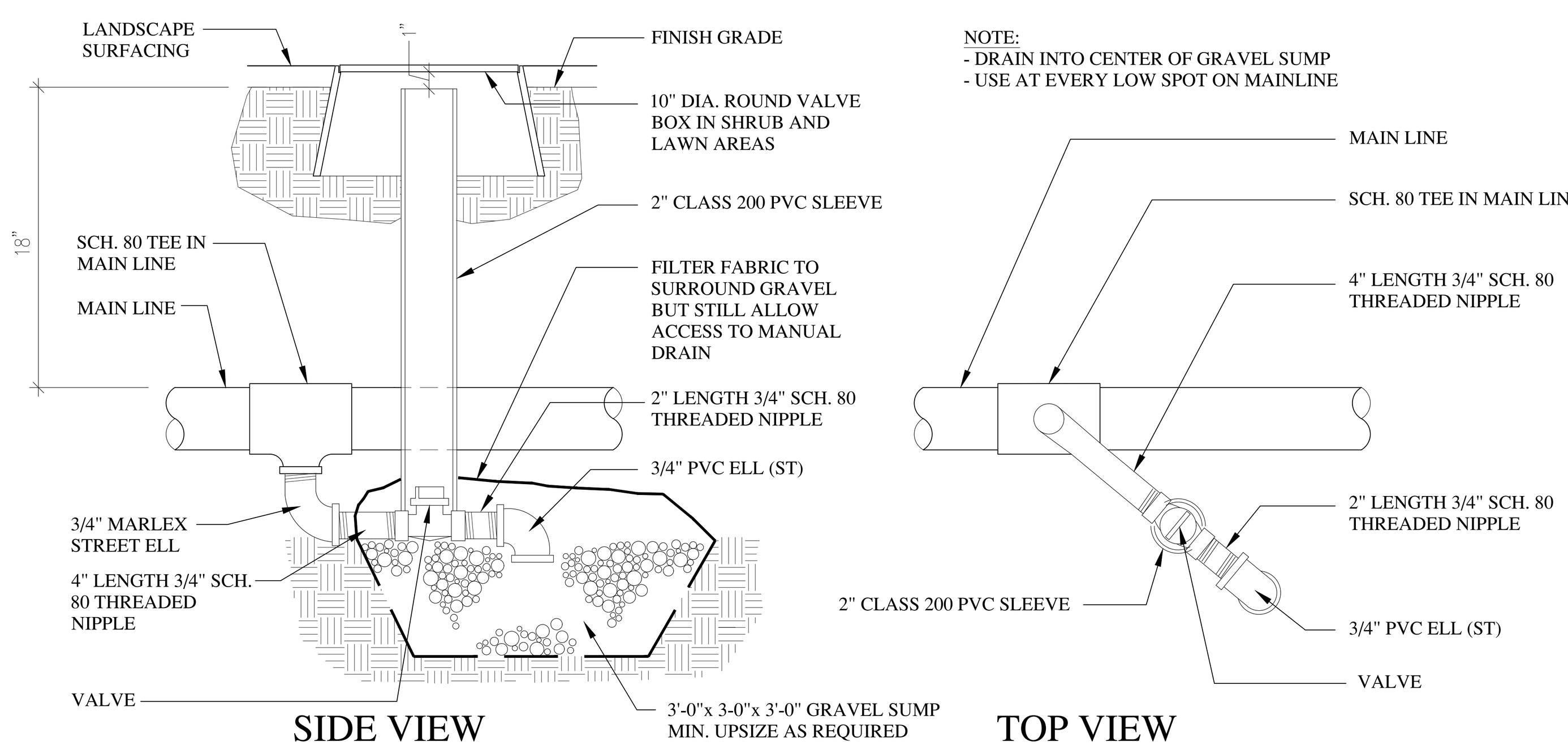

8 MAINLINE MANUAL DRAIN VALVE
SCALE: NTS

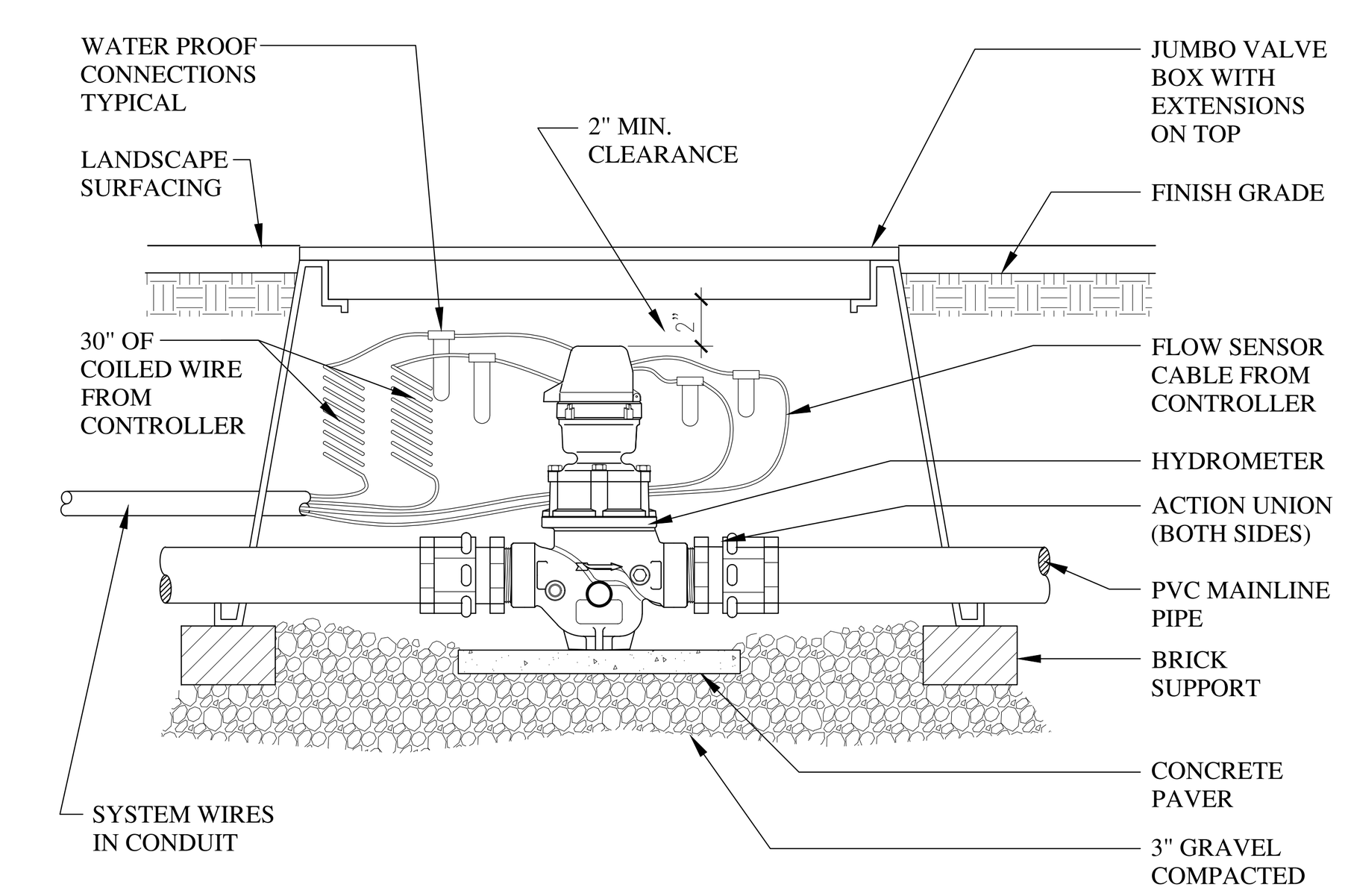

9 HYDROMETER
SCALE: NTS

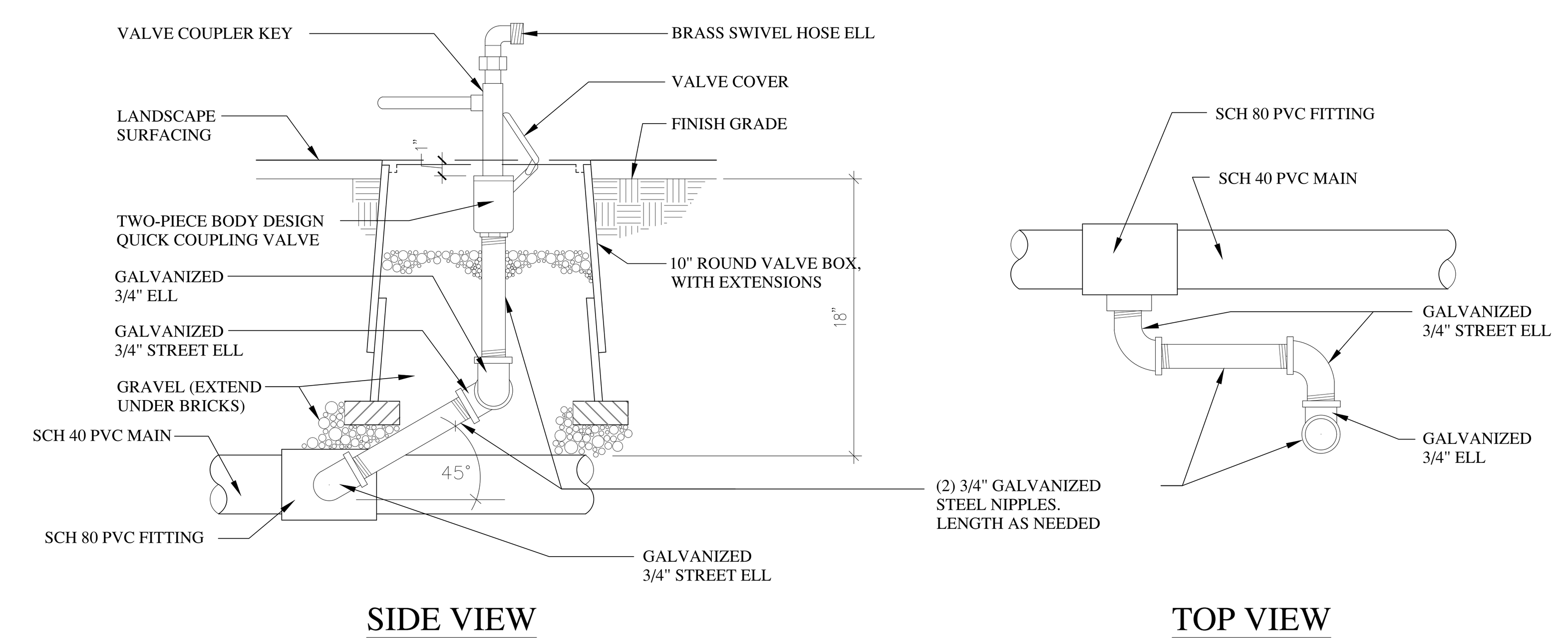

10 QUICK COUPLING VALVE
SCALE: NTS

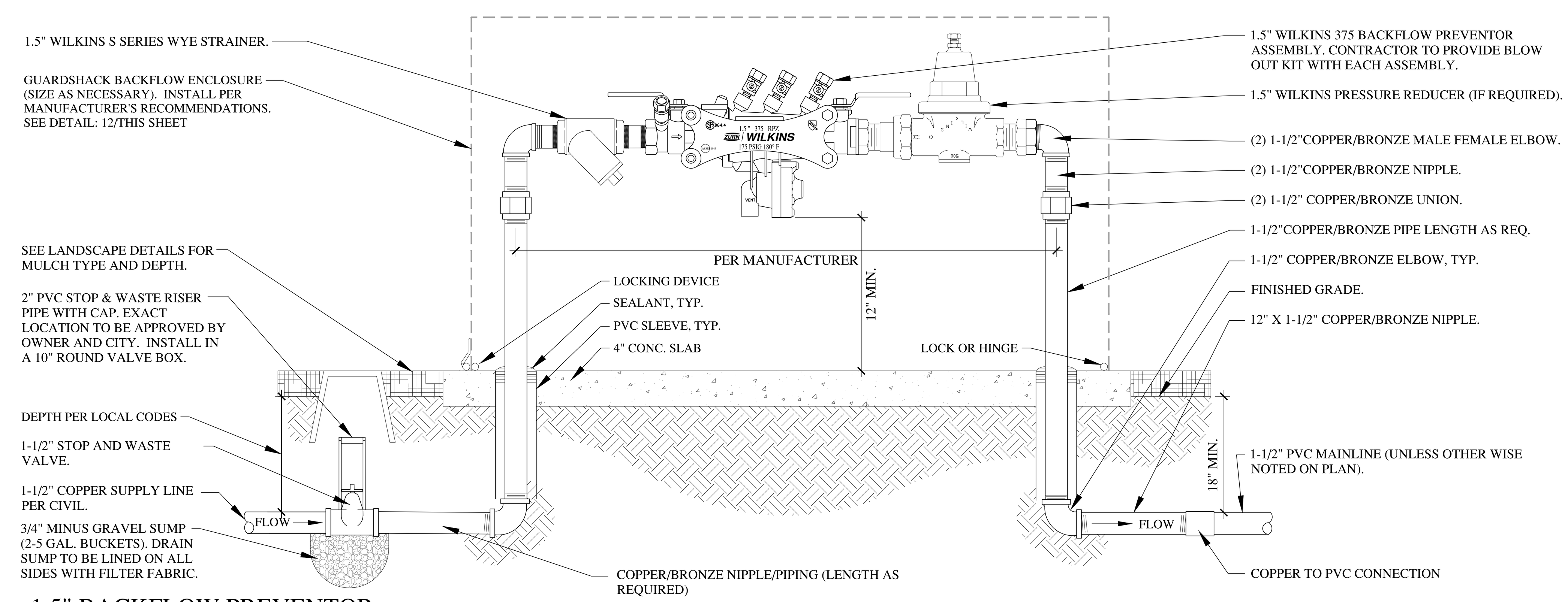

BACKFLOW PREVENTOR NOTES:

1. EQUIPMENT TO BE INSTALLED AT A MINIMUM OF 24" FROM ANY STRUCTURES OR HARDSCAPING.
2. WHEN UNIT IS NEXT TO STRUCTURE (i.e. WALL BUILDING, ETC.) MOUNT TEST COCKS ON SIDE AWAY FROM STRUCTURE.
3. PROVIDE OWNER WITH COMPLETE WRITTEN INSTRUCTIONS ON HOW TO DRAIN ENTIRE BACKFLOW UNIT TO PREVENT FREEZING. CONTRACTOR TO PROVIDE BLOW OUT KIT FROM MANUFACTURER.
4. CONTRACTOR SHALL PROVIDE ALL MATERIALS NECESSARY FOR PROPER RPZ INSTALLATION.
5. RPZ TO BE WINTERIZED AS NECESSARY TO PREVENT FREEZING. INSULATION IS REQUIRED TO PREVENT RPZ FROM FREEZING TEMPERATURES BEFORE SYSTEM IS BLOWN OUT FOR THE SEASON. CONTRACTOR SHALL INSTALL INSULATION BLANKET FOR RPZ.
6. WHERE CORROSION IS POSSIBLE, USE A DIELECTRIC UNION WHEREVER A COPPER-BASED METAL (COPPER, BRASS, BRONZE) IS JOINED TO AN IRON-BASED METAL (IRON, GALVANIZED STEEL, STAINLESS STEEL).
7. CONTRACTOR SHALL TEST WATER SUPPLY TO ENSURE THERE IS AT LEAST 90 PSI AND 23 GPM AVAILABLE AT THE POC PRIOR TO BEGINNING WORK ON THE SYSTEM.
8. PROVIDE DEDUCTIVE BID ALTERNATE TO REDUCE BACKFLOW, PRESSURE REDUCER AND Y STRAINER 1" VS. 1-1/2" WITH ASSOCIATED REDUCER FITTINGS.

11 1.5" BACKFLOW PREVENTOR
SCALE: NTS

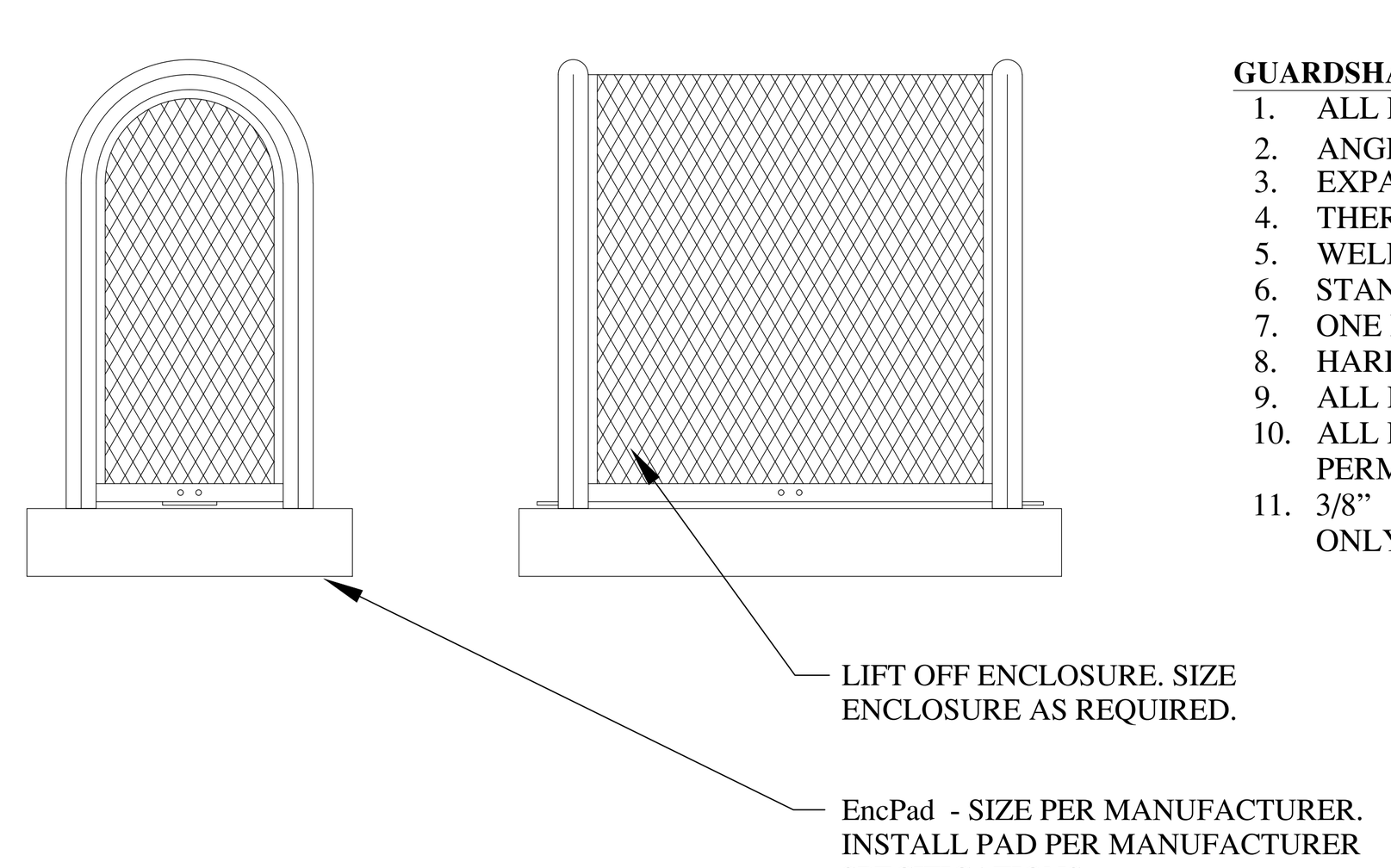

GUARDSHACK GENERAL SPECIFICATIONS
1. ALL PIPE SHALL BE 1 ¼" SCHEDULE 40 A.S.T.M. A-53 GRADE A- ELECTRIC WELD PIPE.
2. ANGLE IRON SHALL BE 1" X 1" X ⅛" STEEL.
3. EXPANDED METAL SHALL BE ½" SPACING X # 13 GA. FLATTENED DIAMOND PATTERN STEEL.
4. THERE SHALL BE NO EXPOSED ENDS OF EXPANDED METAL ON THE OUTSIDE OF THE ENCLOSURE.
5. WELDING SHALL BE A MINIMUM OF ¼" LONG WELDS ON 4" SPACING.
6. STANDARD MOUNTING BRACKETS SHALL BE WELDED ON EACH END OF LIFT OFF ENCLOSURES.
7. ONE BRACKET ON HINGED UNITS SHALL BE WELDED ON END OPPOSITE HINGES.
8. HARDWARE KITS PROVIDED FOR MOUNTING ENCLOSURES.
9. ALL HARDWARE SHALL BE SECURELY ATTACHED TO ENCLOSURES.
10. ALL ENCLOSURES SHALL WITHSTAND A MINIMUM OF 200 LBS. PER SQUARE FOOT WITHOUT ANY PERMANENT DEFLECTION OR DISTORTION.
11. 3/8" SPACING BETWEEN ANGLE IRON FRAMEWORK OF ENCLOSURE AND SLAB TO PREVENT RUSTING. ONLY PIPE ENDS TO TOUCH SLAB.

POWDER COATED UNITS

PRE-POWDERCOAT TREATMENT PROCESS
CLEAN GUARDSHACK UNIT WITH A S-44 ALKALINE CLEANER, OVERFLOW RINSE, APPLY AN AC-8115 IRON PHOSPHATE TREATMENT, OVERFLOW RINSE AND FINISH WITH A #198 SEALER RINSE TO PREVENT RUSTING AND IMPROVE ADHESION.

POWDER COAT TREATMENT PROCESS
UNITS SHALL BE PREHEATED AND COATED BY ELECTROSTATIC APPLICATION OF 2.0 TO 3.5 MIL THICKNESS ON ALL SURFACES. POWDER SHALL BE RAL 1019 WOODLANDS TAN OR TCI 8810-6058 FOREST GREEN OR APPROVED EQUAL IMPACT RESISTANCE FINISH 160 INCH POUNDS DIRECT 160 INCH POUNDS REVERSE, PER ASTM D-2794 SPECS. GLOSS FINISH >85, PER ASTM D-523. ADHESION TO BE RATED EXCELLENT WHEN TESTED TO ASTM D-3359 STANDARDS.

NOTE:
1. ENCLOSURE IS AVAILABLE THROUGH:
BPDI-GUARDSHACK ENCLOSURES
3831 E. GROVE STREET
PHOENIX, ARIZONA 85040
(602) 426-1002
2. CONTRACTOR TO PROVIDE A LOCK TO OWNER UPON INSTALLATION.
3. REFERENCE RPZ DETAIL FOR BACKFLOW INSTALLATION.
4. UPSIZE ENCLOSURE IF NECESSARY.
5. OWNER TO DETERMINE POWDER COAT COLOR PRIOR TO ORDERING UNIT.

12 STANDARD GUARD SHACK ENCLOSURE
SCALE: NTS

NOTES:
1. VALVE BOX TO REST ON (4) CMU BLOCKS (ONE FOR EACH SIDE).
2. CLUSTERED VALVE BOXES MAY SHARE A CMU BLOCK.

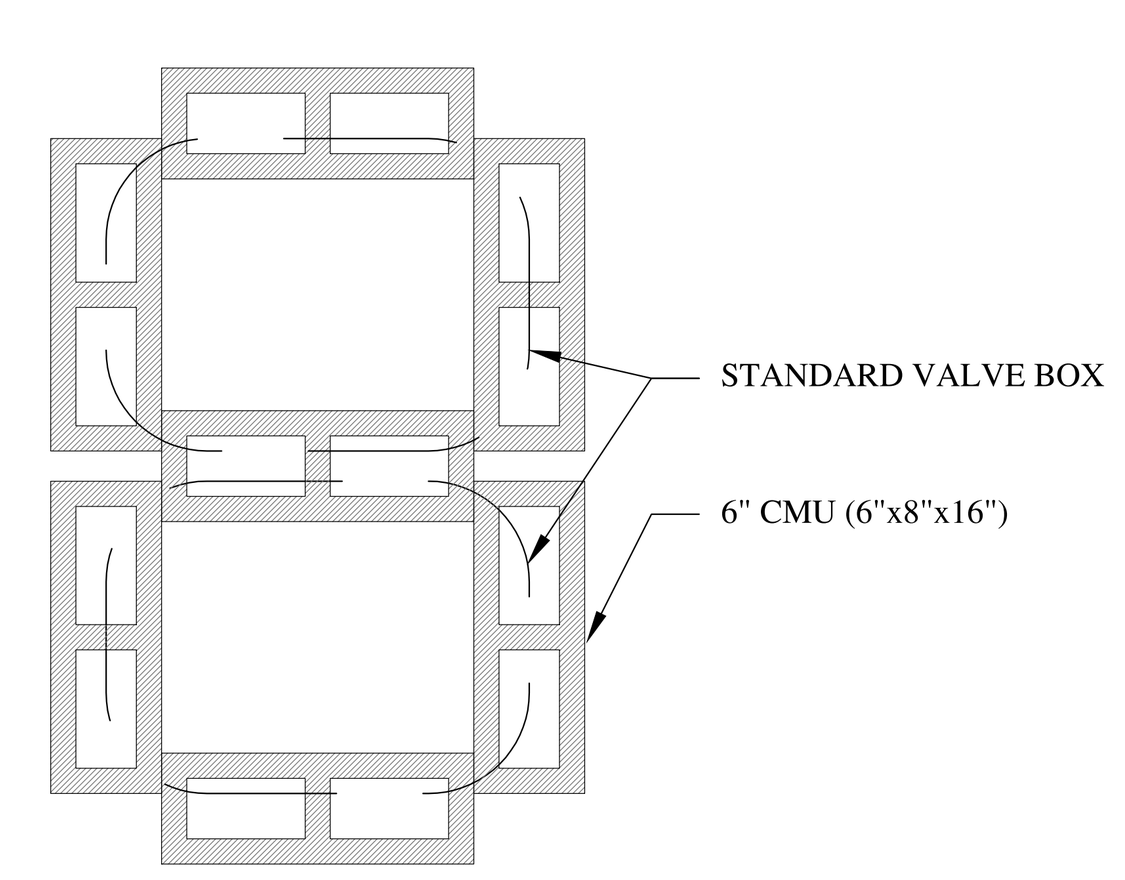

13 CMU PLACEMENT
SCALE: NTS

NOTES:
1. LIMIT 1 VALVE PER BOX.
2. 10" MIN. LATERAL LINE DEPTH AT VALVE BOX, 12" MIN. LATERAL LINE DEPTH EVERYWHERE ELSE.
3. PROVIDE MIN. 2" CLEARANCE BETWEEN WIRE AND CMU BLOCK.

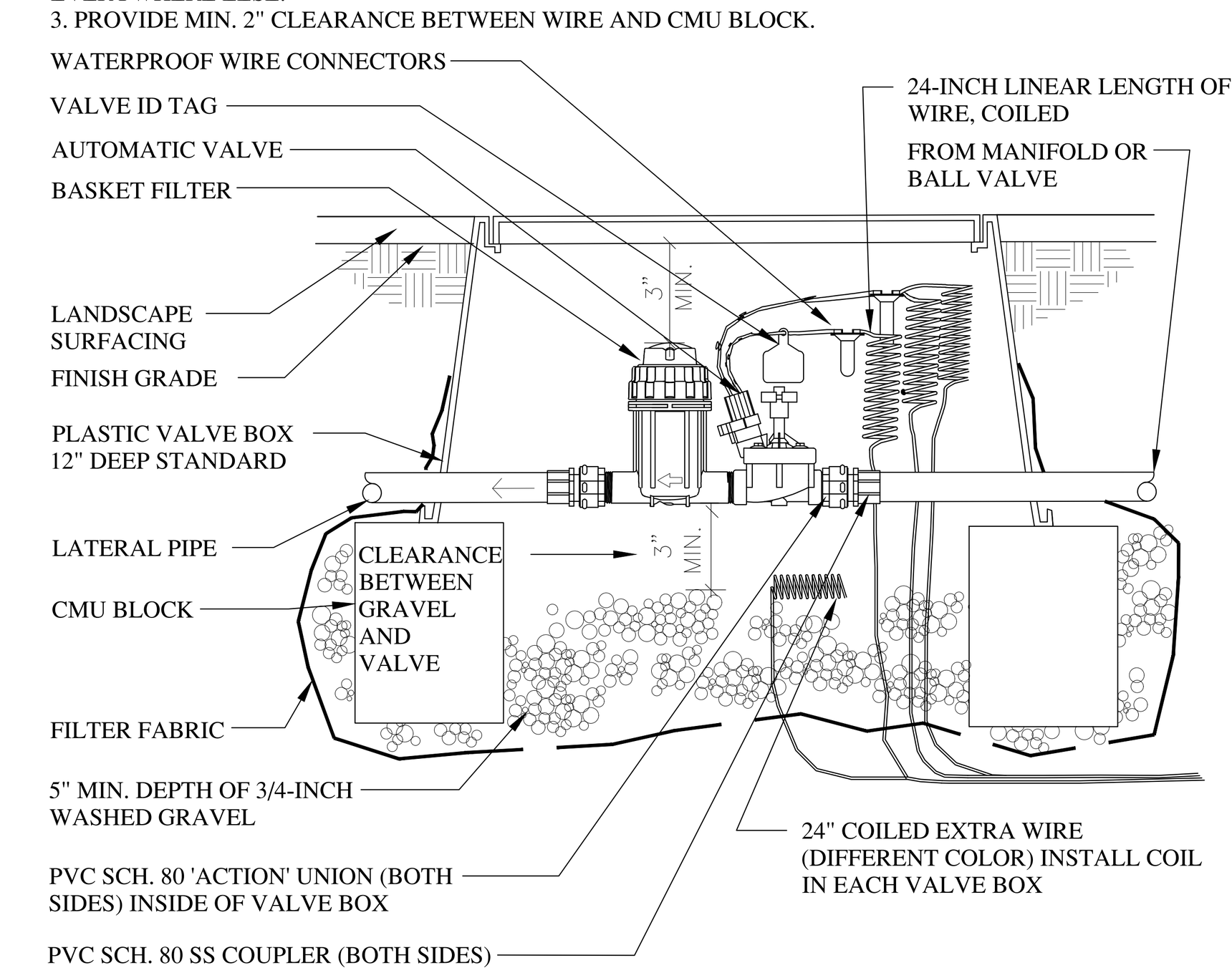

14 DRIP VALVE SECTION - CONVENTIONAL WIRE
SCALE: NTS

In Site DESIGN GROUP
Landscape Architecture Land Planning
17 North 470 West American Fork, Utah 84003
801.756.5043 www.in-sitedesigngroup.com

bhd ARCHITECTS
www.bhdarchitects.com
Phone 801.571.0010
Fax 801.571.0303
Toll Free 888.571.0010
65 East Wadsworth Park Drive
Suite 205 Draper, Utah 84020

LICENSED LANDSCAPE ARCHITECT # 4884514 Cory B. Whiting 8-15-2024 STATE OF UTAH

THE CHURCH OF JESUS CHRIST OF LATTER-DAY SAINTS

Orem YSA 3rd 10 Ward Building
Orem UT YSA 3rd Stake

Approx. 1700 West 575 South
Vineyard, Utah 84059

Date:	BHD #:	County Parcel:	Plan Series:	Owner #:
15 Aug 2024	2344	39:228:0001	2024 10 Ward SC	590-1876

Drawing Issue and Revision Schedule

#	Date	Description
1	15 Nov 2019	Bid Documents

IRRIGATION DETAILS

LS401

Printed: 14 Aug 2024 5:20 PM

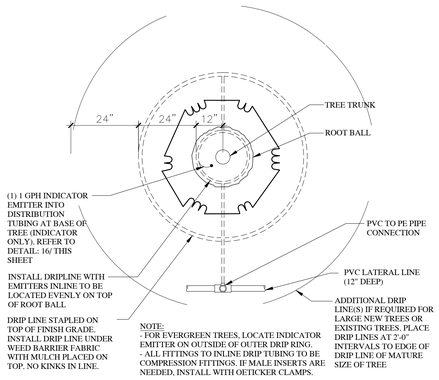

NOTE:
- FOR EVERGREEN TREES, LOCATE INDICATOR EMITTER ON OUTSIDE OF OUTER DRIP RING.
- ALL FITTINGS TO INLINE DRIP TUBING TO BE COMPRESSION FITTINGS. IF MALE INSERTS ARE NEEDED, INSTALL WITH OETICKER CLAMPS.

15 TREE DRIP - PLAN VIEW (PLANTER AREAS)

SCALE: NTS

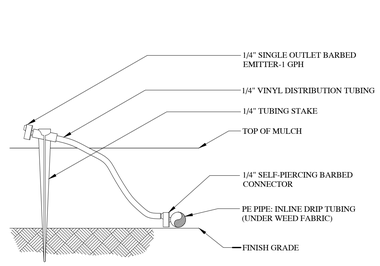

REFER TO DETAIL 15 ON THIS SHEET

NOTE:
1. CONNECT EMITTER DIRECTLY INTO IN-LINE DRIP TUBING.
2. THIS IS AN INDICATOR ONLY EMITTER TO BE USED AT EACH TREE RING AND AREA WHERE IN-LINE TUBING IS INSTALLED.
3. 1/4" TUBING LENGTH: MINIMUM 14", MAXIMUM 24".
4. REFER TO DETAIL 15 ON THIS SHEET.

16 INDICATOR EMITTER

SCALE: NTS

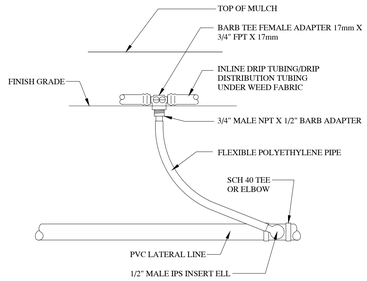

NOTES:
1. USE AT TREE RINGS ONLY.
2. LIMIT 1 VALVE PER BOX.
3. 10" MIN. LATERAL LINE DEPTH AT VALVE BOX. 12" MIN. LATERAL LINE DEPTH EVERYWHERE ELSE.
4. PROVIDE MIN. 2" CLEARANCE BETWEEN CONDUIT AND CMU BLOCK.

17 PVC TO BE PIPE CONNECTION

SCALE: NTS

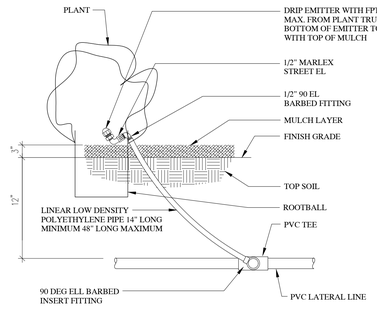

NOTE: LOCATE EMITTER ON BLDG OR FENCE SIDE OF PLANT.

18 DRIP EMITTER INSTALLATION

SCALE: NTS

NOTES:
1. LIMIT 1 VALVE PER BOX.
2. 10" MIN. LATERAL LINE DEPTH AT VALVE BOX. 12" MIN. LATERAL LINE DEPTH EVERYWHERE ELSE.
3. PROVIDE MIN. 2" CLEARANCE BETWEEN WIRE AND CMU BLOCK.
4. FOR MANIFOLD AND VALVE ASSEMBLY, SEE DETAIL:

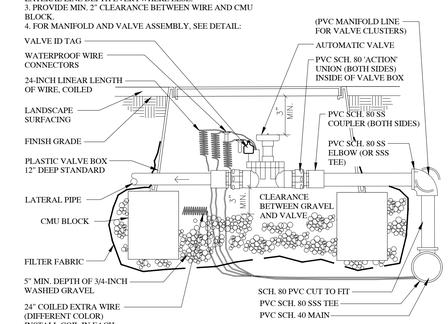

19 AUTOMATIC VALVE - CONVENTIONAL WIRE

SCALE: NTS

20 SPRAY AND ROTARY HEAD ASSEMBLY

SCALE: NTS

21 SPRAY HEAD OR ROTOR NEXT TO CURB / WALK

SCALE: NTS

22 ROTOR POP-UP HEAD

SCALE: NTS

bhd ARCHITECTS
www.bhdarchitects.com
Phone 801.571.0010
Fax 801.571.0303
Toll Free 888.571.0010
65 East Wadsworth Park Drive
Suite 205 Draper, Utah 84020

LICENSED LANDSCAPE ARCHITECT # 4884514 Cory B. Whiting 8-15-2024 STATE OF UTAH

THE CHURCH OF JESUS CHRIST OF LATTER-DAY SAINTS

Orem YSA 3rd 10 Ward Building
Orem UT YSA 3rd Stake

Approx. 1720 West 575 South
Vineyard, Utah 84059

Date: 13 Aug 2024
BHD #: 2244
County Parcel: 37:220:0001
Plan Series: 2024 10 Ward SC
Owner #: 3PS18PX

Drawing Issue and Revision Schedule		
#	Date	Description
1	15 Nov 2019	Bid Documents

IRRIGATION DETAILS

LS402

In Site DESIGN GROUP
Landscape Architecture Land Planning
17 North 470 West American Fork, Utah 84003
801.756.5043 www.in-sitedesigngroup.com

Printed: 14 Aug 2024 5:20 PM

Building Insulation Envelope Minimum Requirements

1. Roof: R-57 unfaced batt cavity insulation. See B/A502 and Section 07 2100.
2. Exterior walls: R-4.6 continuous 1" rigid insulation. Unfaced batt cavity insulation per wall stud thickness: 2x6 = R-21, 2x8 = R-26, 2x10 = R-32, 2x12 = R-38. See Section 07 2100.
3. Exterior foundation walls: R-15 continuous 3" rigid insulation. See 13/A310 and Section 07 2100.
4. Vinyl windows: 0.31 U-factor and 0.20 SHGC. Certified by an independent laboratory per NFRC 100 and labeled by the manufacturer. See Section 08 5313.
5. Storefront openings: 0.43 U-factor and 0.24 SHGC. See Section 08 4313.
6. Hollow metal doors: R-6. See Section 08 1113.
7. Vapor retarder: Continuous from slab, up wall, through roof under roof insulation, and down wall to slab. Seal air tight. See Section 07 2500.
8. Envelope continuity: No holes or gaps in the building insulation envelope. See Sections 07 2100 and 07 2500.

General Notes

A. For dimensions not shown here, see Sheet A103 and enlarged plans.
B. Dimensions are to grid and face of stud unless otherwise noted.
C. For dimensions to face of foundation and floor slab depression locations, see Sheet A110.
D. See wall types plan on sheet A104 and wall type definitions A105 for wall framing materials and notes.
E. Insulate interior walls and ceilings around all vestibules.
F. Acoustical separation is required at all restrooms, all bishop offices, all clerk offices, high council 129, stake president 125, and rooms 117, 118, 120, 121, 169, 170, 172, and 173. Acoustical separation requirements incude wall insulation and acoustical insulation above the ceiling.
G. Install vapor retarder under concrete slab.
H. For locations of return air ducts in stud walls see mechanical drawings.
I. Install fire blocking at shaft walls.
J. Install 2x fire blocking in all walls at ceiling and floor levels.
K. At all walls exceeding 10'-0" in height, install 2x fire blocking at 10'-0" o.c. maximum vertically and at floor and ceiling levels.
L. Provide solid blocking in the walls at all door stops, visual display boards, toilet compartments, lavatory supports, drinking fountains, millwork and cabinets, and at all other equipment and accessory locations. See detail A/A105 (typical).
M. For details and elevations for locations of visual display boards, see Sheet F101.
N. For door schedule, see Sheet A610.
O. For typical restroom mounting heights, see Sheet G002.
P. All wall finishes, including gypsum board, are shown on Sheet A106 Main Floor Finish Plan.
Q. For mechanical enclosures, see the Site Sheets.
R. All exterior walls shall be 2-hour fire rated and non-combustible construction. Non-combustible construction shall be achieved by fire-retardant treated lumber, and for SCL / LVL-type lumber, intumescent paint treatment. These requirements are from the foundation wall up to the bottom of the roof structure. Walls above the beginning of the roof structure at that wall are not required to meet this requirement. Walls with bumpouts shall be part of the 2-hour rated assembly and of non-combustible construction. The construction parameters for this requirement are shown on A105.

Keyed Notes

01-2 Equipment Furnished and Installed by Owner.
01-5 Artwork location. Do not install any equipment or devices in this location.
01-10 Wheelchair seating space. Typical.
04-12 Mechanical enclosure wall. See C and D/C504 and Structural Sheets.
06-11 Wall-Mounted Open Adjustable Shelving. See Q/A701.
06-13 Recessed Hymn Book Shelf. Refer to R/A702.
06-14 Hymn Book Shelf, Refer to Q/A702.
06-18 Slanted wall framing. See A/A504.
06-41 Full-height cabinetry. See A702.
07-27 Prefinished Metal Downspout. Typical. See H/A502.
08-10 Door operator location. See Electrical Sheets and Door Schedule A610.
09-15 Sports flooring paint lines. See F101 for dimensions.
09-18 4'-0" x 4'-0" sound-absorptive acoustical panels. See H/A702.
09-42 Aluminum threshold by the hardwood flooring manufacturer.
10-22 Semi-recessed fire extinguisher cabinet. See F/A702 and Code Plans.
10-24 Wall Mounted Coat Rack, Refer to Detail A/A702.
10-34 Future adult changing station. Coordinate the requirements of the changing station to install blocking for installation, and stub conduit for power and control requirements.
11-7 Volleyball post insert. See I/A705.
11-13 Basketball standard above.
11-14 Volleyball post insert for storage. See D and I/A705.
12-4 Upholstered pews furnished and installed by Owner. Typical.
21-2 Fire department connection with locking knox plugs. Coordinate model with Fire Department requirements.
22-12 Water Cooler, Provide Solid Blocking in Wall as Required by Manufacturer, Refer to Plumbing Drawings.
22-14 Natural Gas Meter. See Plumbing Sheets.
23-7 Condensing unit. Typical. See Mechanical Drawings.
27-4 AV Box, Refer to Audio/Visual Drawings.
28-2 Fire alarm control panel location. See A101 and electrical sheets.

Note:
Verify code and manufacturer required clearances at mechanical equipment, electrical panels, and gas equipment prior to installation of mechanical enlosure walls.

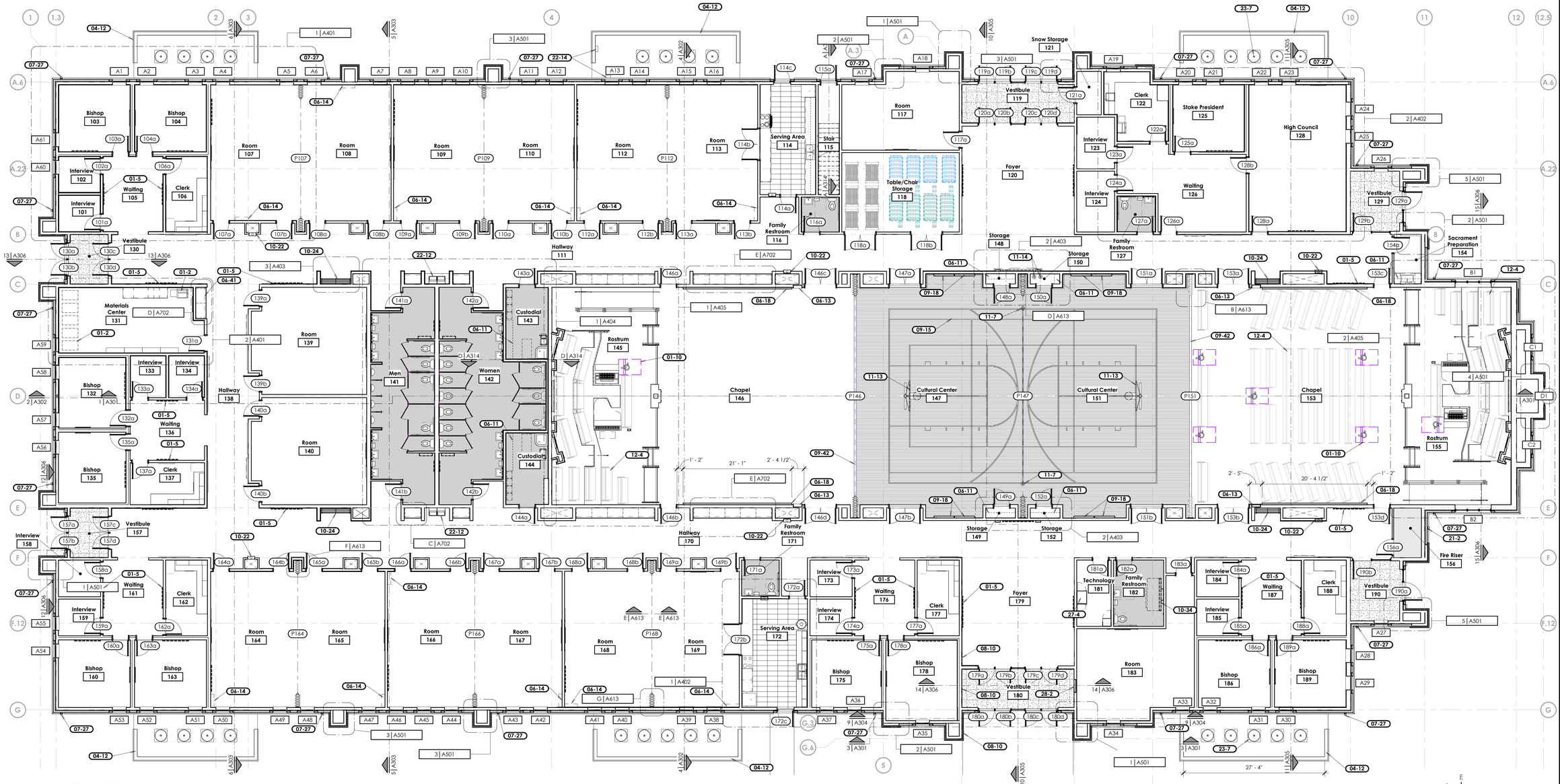
Bishop 103
Bishop 104
Interview 102
Waiting 105
Clerk 106
Interview 101
Vestibule 130
Materials Center 131
Interview 133
Interview 134
Bishop 132
Waiting 136
Bishop 135
Clerk 137
Vestibule 157
Interview 158
Waiting 161
Clerk 162
Interview 159
Bishop 160
Bishop 163
Room 107
Room 108
Room 109
Room 110
Room 112
Room 113
Serving Area 114
Stair 115
Family Restroom 116
Room 117
Table/Chair Storage 118
Foyer 120
Vestibule 119
Snow Storage 121
Clerk 122
Interview 123
Interview 124
Waiting 126
Family Restroom 127
Stake President 125
High Council 128
Vestibule 129
Sacrament Preparation 154
Hallway 111
Room 139
Room 140
Hallway 138
Men 141
Women 142
Custodial 143
Custodial 144
Rostrum 145
Chapel 146
Cultural Center 147
Storage 148
Storage 149
Storage 150
Storage 152
Cultural Center 151
Family Restroom 171
Hallway 170
Room 164
Room 165
Room 166
Room 167
Room 168
Room 169
Serving Area 172
Bishop 175
Interview 173
Interview 174
Waiting 176
Clerk 177
Bishop 178
Foyer 179
Technology 181
Family Restroom 182
Room 183
Interview 184
Interview 185
Waiting 187
Clerk 188
Bishop 186
Bishop 189
Vestibule 190
Chapel 153
Rostrum 155
Fire Riser 156
Materials Center D | A702
Room 107 P107
Room 108 P108
Room 109 P109
Room 110 P110
Room 112 P112
Chapel 146 P146
Cultural Center 147 P147
Cultural Center 151 P151
Room 164 P164
Room 165 P165
Room 166 P166
Room 168 P168
Room 169 P169
Men 141 D | A314
Women 142 D | A314
Rostrum 145 D | A314
Stair 115 A | A314
Serving Area 114 A | A314
Family Restroom 116 A | A314
Chapel 153 B | A613
Cultural Center 147 D | A613
Cultural Center 151 D | A613
Room 107 F | A613
Room 108 F | A613
Room 109 F | A613
Room 110 F | A613
Room 112 F | A613
Room 164 F | A613
Room 165 F | A613
Room 166 F | A613
Room 168 G | A613
Room 169 G | A613
Room 139 2 | A401
Room 140 2 | A401
Chapel 153 2 | A405
Room 183 14 | A306
Bishop 103 A61
Bishop 104 A61
Interview 102 A60
Waiting 105 A60
Clerk 106 A60
Interview 101 A60
Vestibule 130 A59
Materials Center 131 A59
Interview 133 A58
Interview 134 A58
Bishop 132 A58
Waiting 136 A57
Bishop 135 A56
Clerk 137 A56
Vestibule 157 A55
Interview 158 A55
Waiting 161 A54
Clerk 162 A54
Interview 159 A54
Bishop 160 A53
Bishop 163 A53
Vestibule 130 A59
Bishop 103 A61
Bishop 104 A61
Interview 102 A60
Waiting 105 A60
Clerk 106 A60
Interview 101 A60
Vestibule 157 A55
Interview 158 A55
Waiting 161 A54
Clerk 162 A54
Interview 159 A54
Bishop 160 A53
Bishop 163 A53
Vestibule 129 A27
Sacrament Preparation 154 B1
Vestibule 190 A27
Fire Riser 156 B2
Chapel 153 C1
Rostrum 155 C2
Chapel 153 D1
Clerk 188 A27
Bishop 186 A31
Bishop 189 A31
Room 183 A34
Vestibule 180 A35
Bishop 175 A36
Bishop 178 A36
Interview 173 A37
Interview 174 A37
Waiting 176 A37
Clerk 177 A37
Foyer 179 A38
Technology 181 A39
Family Restroom 182 A39
Interview 184 A32
Interview 185 A32
Waiting 187 A32
Clerk 188 A32
Bishop 186 A33
Bishop 189 A33
Vestibule 190 A28
Vestibule 129 A28
Sacrament Preparation 154 A29
Chapel 153 A30
Rostrum 155 A30
Fire Riser 156 A30
Vestibule 129 A24
Vestibule 190 A24
Chapel 153 A25
Rostrum 155 A25
Fire Riser 156 A26
Chapel 153 A26
Chapel 153 A27
Fire Riser 156 A27
Chapel 153 A28
Fire Riser 156 A28
Chapel 153 A29
Fire Riser 156 A29
Hallway 111 E | A702
Hallway 138 E | A702
Hallway 170 E | A702
Rostrum 145 1 | A404
Room 139 2 | A401
Room 140 2 | A401
Room 183 14 | A306
Chapel 146 1 | A405
Chapel 153 2 | A405
Chapel 153 4 | A501
Chapel 153 5 | A501
Chapel 153 2 | A501
Chapel 153 2 | A402
Chapel 153 1 | A501
Chapel 153 5 | A501
Chapel 153 2 | A501
Chapel 153 2 | A403
Chapel 153 3 | A501
Chapel 153 3 | A403
Chapel 153 3 | A501
Chapel 153 1 | A501
Chapel 153 3 | A301
Chapel 153 3 | A301
Chapel 153 9 | A304
Chapel 153 9 | A304
Chapel 153 14 | A306
Chapel 153 14 | A306
Chapel 153 1 | A402
Chapel 153 1 | A501
Chapel 153 2 | A501
Chapel 153 2 | A403
Chapel 153 1 | A501
Chapel 153 1 | A501
Chapel 153 1 | A501

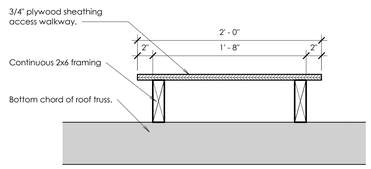

A Access Walkway Detail

Scale: 1 1/2" = 1'-0"

Equipment Platform Symbol Legend

- R-30 acoustical batt insulation over ceiling below.
- R-30 thermal batt insulation over ceiling below.
- Insulation over soffit below. Fill entire cavity with insulation. At roof locations, leave 4" ventilation space to deck. Install baffles as necessary to maintain ventilation space.
- Equipment platform sheathing - painted gray.
- Area of attic and / or overbuild above filled with insulation. See Building Sections.
- Area of stepped ceiling to be filled with insulation. See E/A504.
- FE — Wall mounted fire extinguisher.

General Equipment Plan Notes:

1. Refer to Sheet A103 for Dimensions.
2. Refer to Sheets A104 & A105 for Wall Assembly Types.
3. Refer to Sheet A610 for Door & Accordion Partition Schedules.
4. Walls shown on this plan either extend to the structure or have heights listed on the main floor plan (heights are from main floor FFE).
5. Ductwork and piping not shown for clarity. Refer to Mechanical and Plumbing drawings.
6. Provide safety railing at all platform perimeter not protected by partitions or ductwork. Refer to Detail C/A314.
7. At all walls exceeding 10'-0" in height, install 2x fire blocking at 10'-0" o.c. maximum vertically and at floor and ceiling levels.
8. Install fire blocking at shaft walls.
9. Provide solid blocking in walls at all wall-mounted accessories. See A105.
10. Seal all penetrations through the building thermal envelope.

Keyed Notes

05-1	Painted steel ladder. See B/A314. Center ladder between trusses.
06-3	Attic access catwalk. See A/A102. Center catwalk in truss at the high point of the truss.
09-30	Wall framing with safety railing. Typical at all wall framing adjacent to lay-in ceilings or other ceilings with no floor framing or sheathing. See Structural Sheets and C/A314.
26-4	Electrical Panel. Refer to Electrical Drawings.

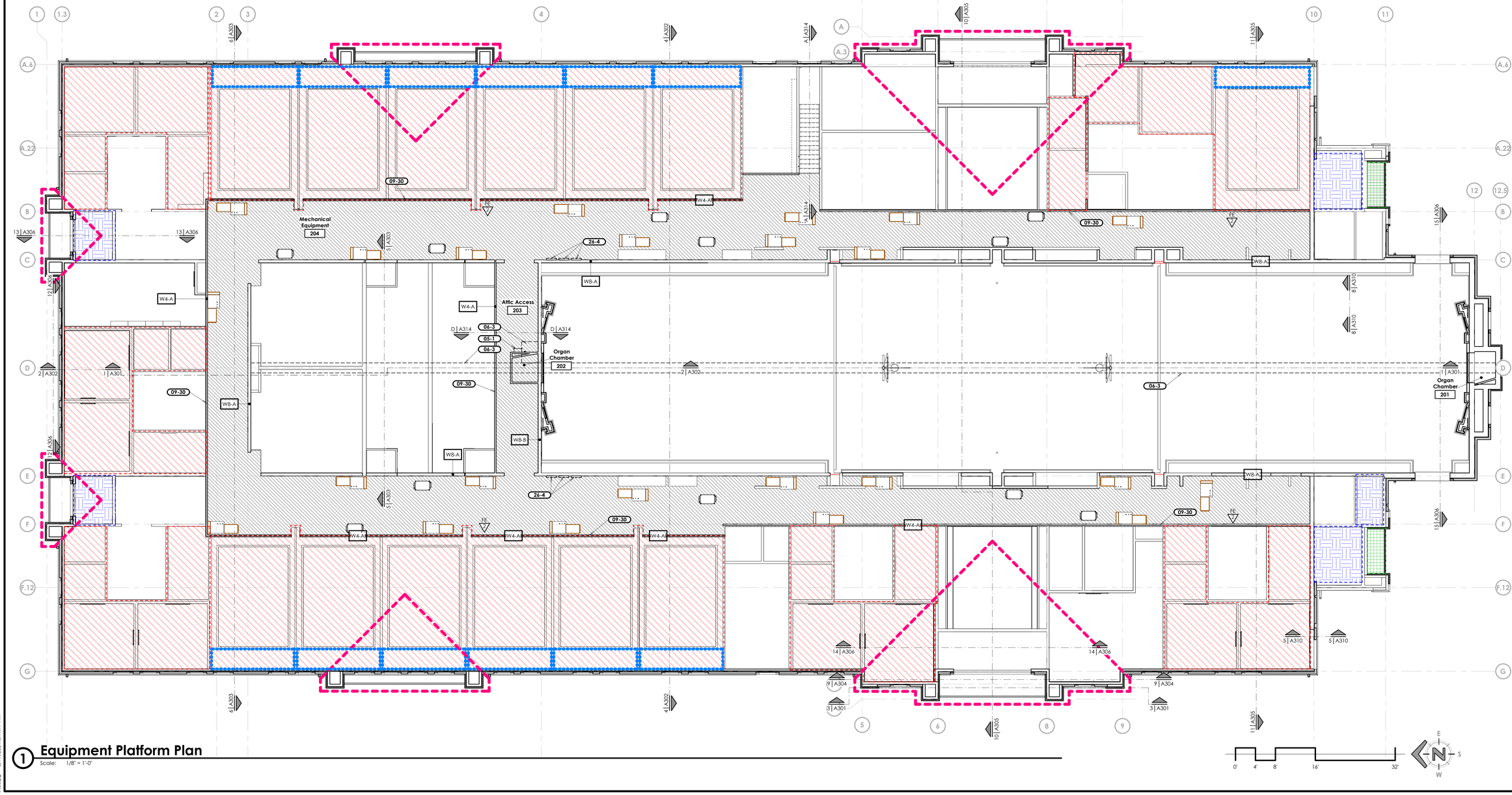

1 Equipment Platform Plan

Scale: 1/8" = 1'-0"

bhd ARCHITECTS
www.bhdarchitects.com
Phone 801.571.0010
Fax 801.571.0303
Toll Free 888.571.0010
65 East Wadsworth Park Drive
Suite 205 Draper, Utah 84020

LICENSED ARCHITECT Lafe Theodore Harris 15 Aug 2024 6778878-0301 STATE OF UTAH

THE CHURCH OF JESUS CHRIST OF LATTER-DAY SAINTS

Orem YSA 3rd 10 Ward Building
Orem UT YSA 3rd Stake

Approx 1700 West 575 South
Vineyard, Utah 84059

Owner #: 390-1806
Plan Series: 2024 10 Ward SC
County Parcel: 39-225-0001
BID #: 2344
Date: 15 Aug 2024

Drawing Issue and Revision Schedule

1	15 Aug 2024	Bid Drawings

Equipment Platform Plan

A102

Printed 8/19/2024 3:11:19 PM

General Notes

A. Dimensions are from face of stud or from grid unless otherwise noted.
B. Where walls appear to lie on the grid, align the face of the wall framing with the grid line unless otherwise noted.
C. For the relationship between the framing and the foundation wall below, see the wall details on Sheet A310.

Keyed Notes

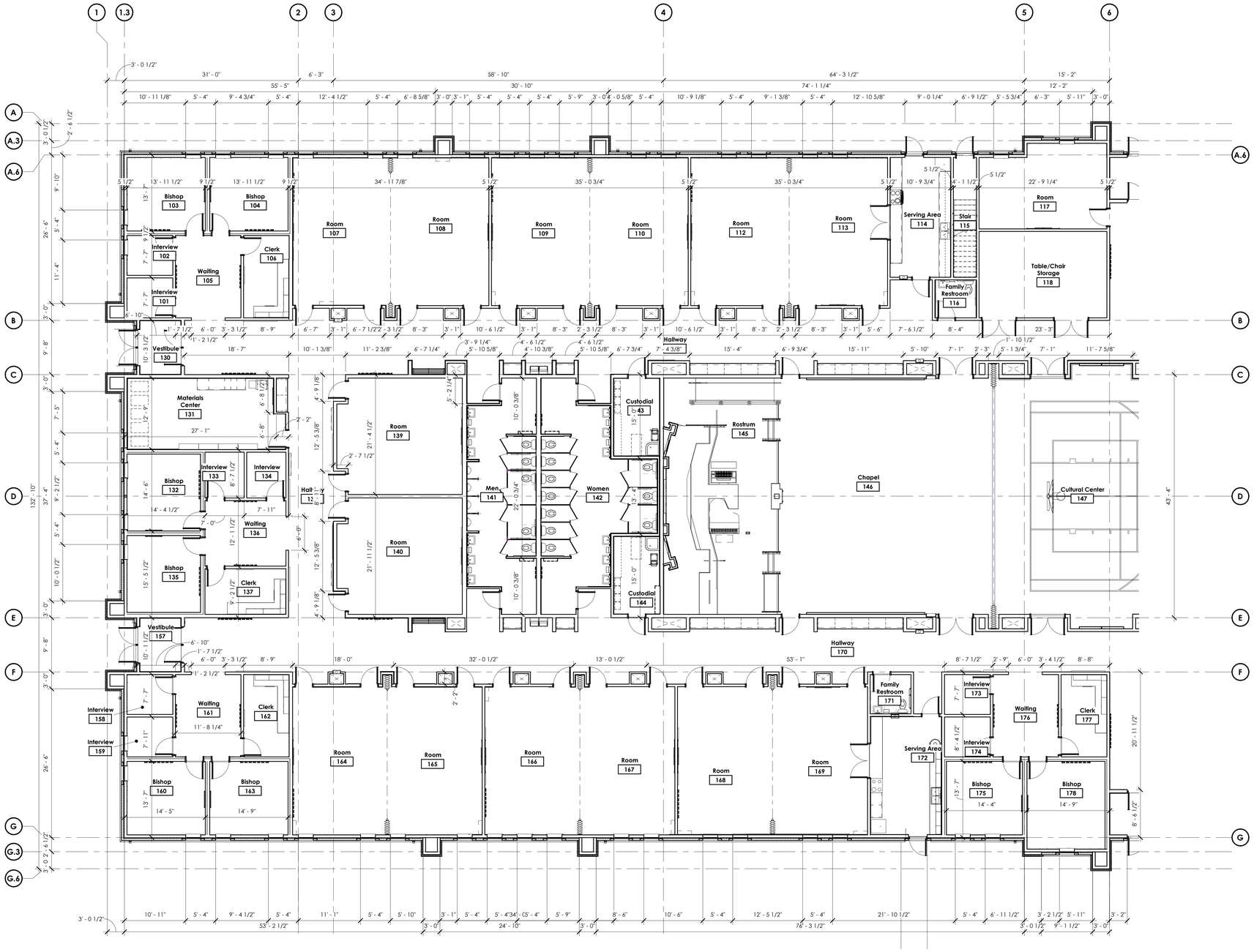

1 Main Floor Dimension Plan

Scale: 1/8" = 1'-0"

0' 4' 8' 16' 32'

bhd ARCHITECTS
www.bhdarchitects.com
Phone 801.571.0010
Fax 801.571.0303
Toll Free 888.571.0010
65 East Wadsworth Park Drive
Suite 205 Draper, Utah 84020

LICENSED ARCHITECT
Lafe Theodore Harris
15 Aug 2024
5778898-0301
STATE OF UTAH

THE CHURCH OF JESUS CHRIST OF LATTER-DAY SAINTS

Orem YSA 3rd 10 Ward Building
Orem UT YSA 3rd Stake

Approx 1700 West 575 South
Vineyard, Utah 84059

Date: 15 Aug 2024
BHD #: 2344
County Parcel: 39-226-0001
Plan Series: 2024 10 Ward SC
Owner #: 390-1876

Drawing Issue and Revision Schedule

#	Date	Description
1	15 Aug 2024	Bid Drawings

Dimension Plan

A103a

Printed 8/19/2024 3:43:30 PM

General Notes

A. Dimensions are from face of stud or from grid unless otherwise noted.
B. Where walls appear to lie on the grid, align the face of the wall framing with the grid line unless otherwise noted.
C. For the relationship between the framing and the foundation wall below, see the wall details on Sheet A310.

Keyed Notes

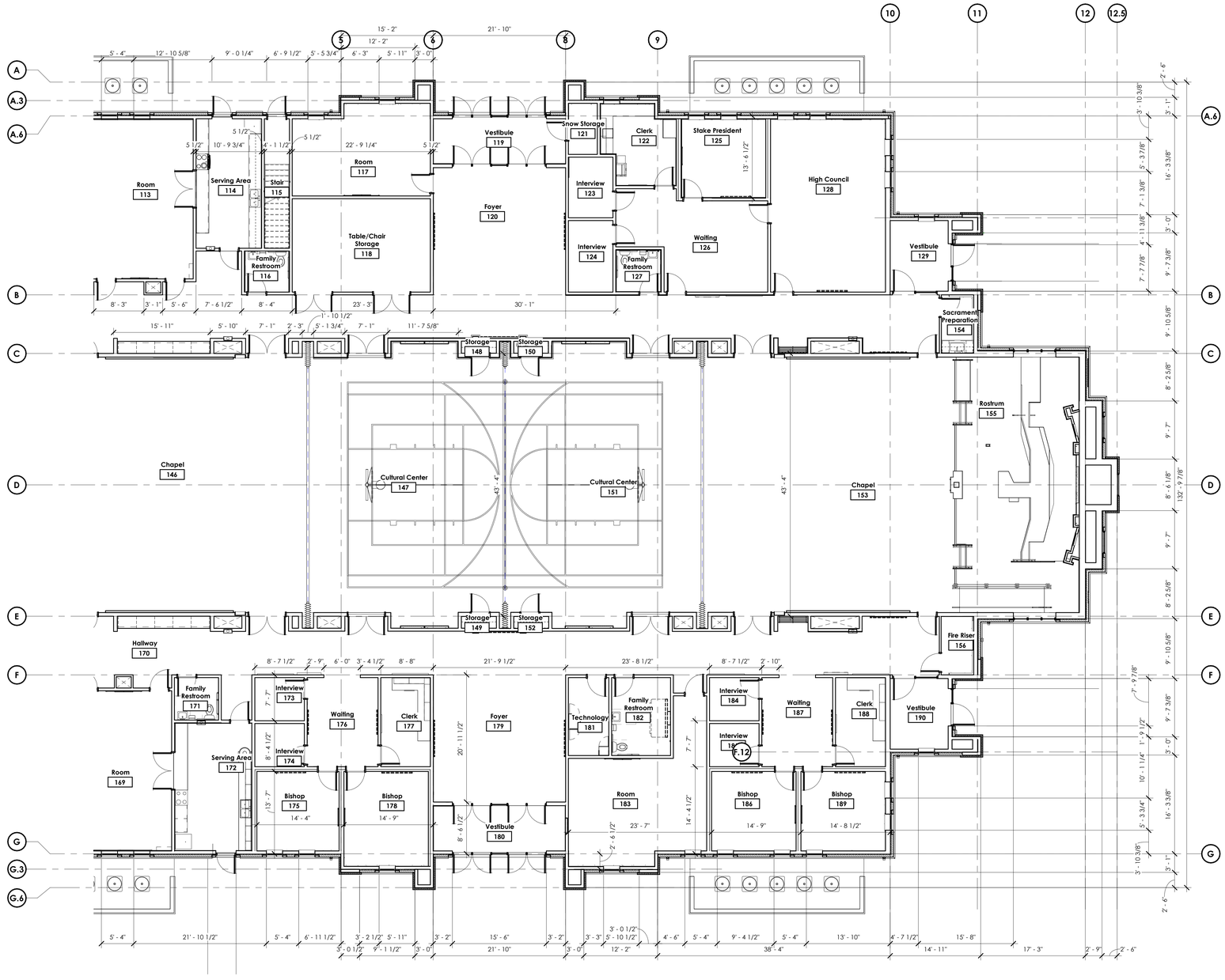

1 Main Floor Dimension Plan

Scale: 1/8" = 1'-0"

0' 4' 8' 16' 32'

bhd ARCHITECTS
www.bhdarchitects.com
Phone 801.571.0010
Fax 801.571.0303
Toll Free 888.571.0010
65 East Wadsworth Park Drive
Suite 205 Draper, Utah 84020

LICENSED ARCHITECT
Lafe Theodore Harris
15 Aug 2024
6978878-0301
STATE OF UTAH

THE CHURCH OF JESUS CHRIST OF LATTER-DAY SAINTS

Orem YSA 3rd 10 Ward Building
Orem UT YSA 3rd Stake

Approx. 1700 West 575 South
Vineyard, Utah 84059

BID #: 2344
Date: 15 Aug 2024
County Parcel: 39-228-0001
Plan Series: 2024 10 Ward SC
Owner #: 590-1876

Drawing Issue and Revision Schedule

No.	Description	Date
1	Bid Drawings	15 Aug 2024

Dimension Plan

A103b

Printed 8/19/2024 3:43:01 PM

General Wall Types Legend

Provide Acoustical Insulation Batts Filling Stud Cavity.

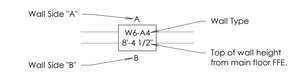

General Notes

A. Insulate all exterior walls defining the building envelope. See note on A101.
B. Insulate all interior walls shown here with dashed lines through the wall.
C. See Sheet A105 for wall types descriptions.
D. All wall finishes, including gypsum board, are shown on Sheet A106 Main Floor Finish Plan.
E. All exterior walls shall be 2-hour fire rated and non-combustible construction. Non-combustible construction shall be achieved by fire-retardant treated lumber, and for SCL / LVL-type lumber, intumescent paint treatment. These requirements are from the foundation wall up to the bottom of the roof structure. Walls above the beginning of the roof structure at that wall are not required to meet this requirement. Walls with bumpouts shall be part of the 2-hour rated assembly and of non-combustible construction. The construction parameters for this requirement are shown on A105.

Keyed Notes

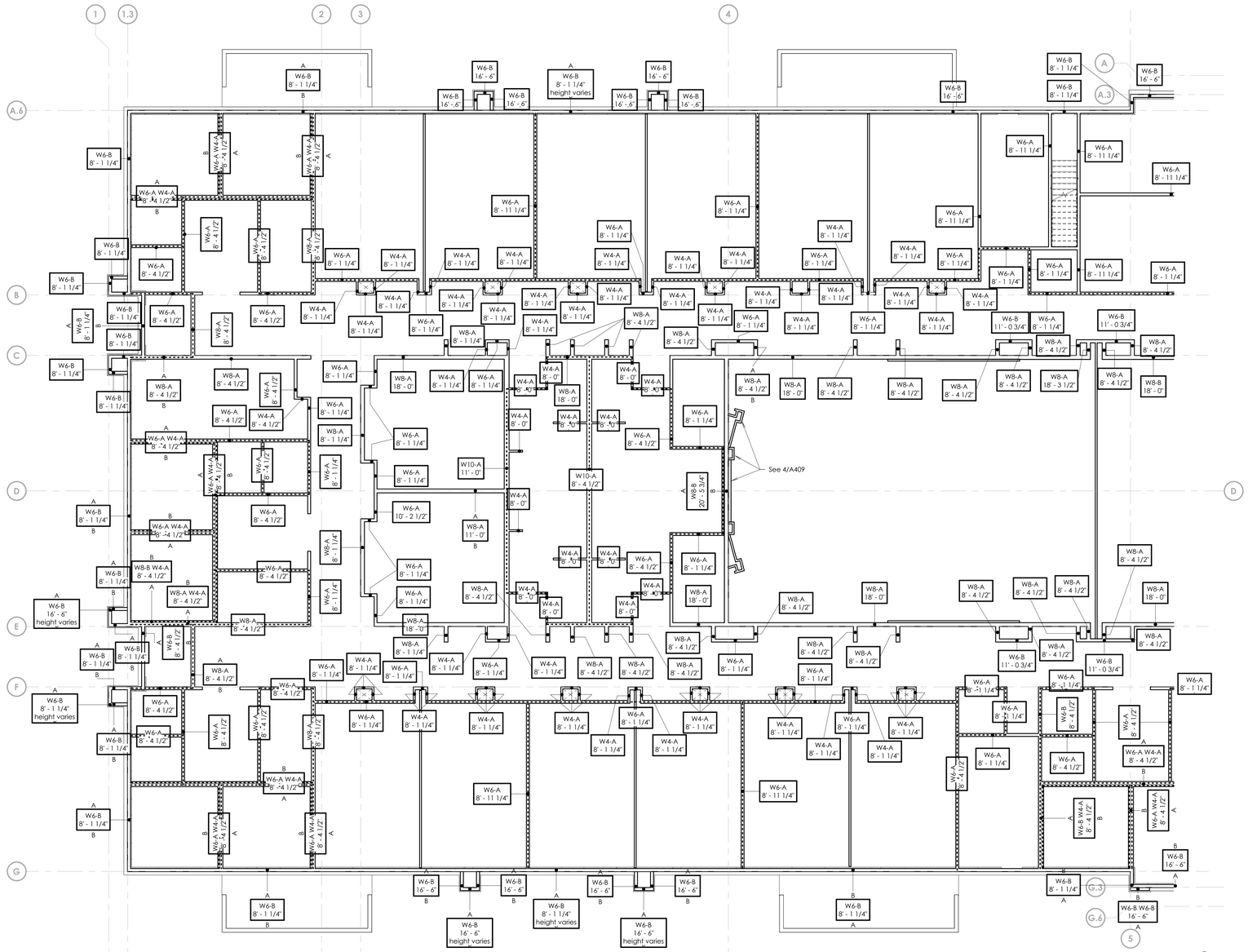

1 **Main Floor Wall Types Plan**
Scale: 1/8" = 1'-0"

0' 4' 8' 16' 32'

bhd ARCHITECTS
www.bhdarchitects.com
Phone 801.571.0010
Fax 801.571.0303
Toll Free 888.571.0010
65 East Wadsworth Park Drive
Suite 205 Draper, Utah 84020

LICENSED ARCHITECT Lafe Theodore Harris 15 Aug 2024 6978878-0301 STATE OF UTAH

THE CHURCH OF JESUS CHRIST OF LATTER-DAY SAINTS

Orem YSA 3rd 10 Ward Building
Orem UT YSA 3rd Stake

Approx. 1700 West 575 South
Vineyard, Utah 84059

Date: 15 Aug 2024
BHD #: 2344
County Parcel: 37-228-0001
Plan Series: 2024 10 Yrsrd S/C
Owner #: 590-1876

Drawing Issue and Revision Schedule

#	Date	Description
1	15 Aug 2024	Bid Drawings

Wall Types Plan

A104a

General Wall Types Legend

Provide Acoustical Insulation Batts Filling Stud Cavity.

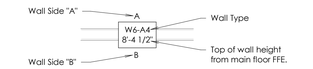

General Notes

A. Insulate all exterior walls defining the building envelope. See note on A101.
B. Insulate all interior walls shown here with dashed lines through the wall.
C. See Sheet A105 for wall types descriptions.
D. All wall finishes, including gypsum board, are shown on Sheet A106 Main Floor Finish Plan.
E. All exterior walls shall be 2-hour fire rated and non-combustible construction. Non-combustible construction shall be achieved by fire-retardant treated lumber, and for SCL / LVL-type lumber, intumescent paint treatment. These requirements are from the foundation wall up to the bottom of the roof structure. Walls above the beginning of the roof structure at that wall are not required to meet this requirement. Walls with bumpouts shall be part of the 2-hour rated assembly and of non-combustible construction. The construction parameters for this requirement are shown on A105.

Keyed Notes

06-32 Top of 2x4 portion of wall at 8'-4 1/2".

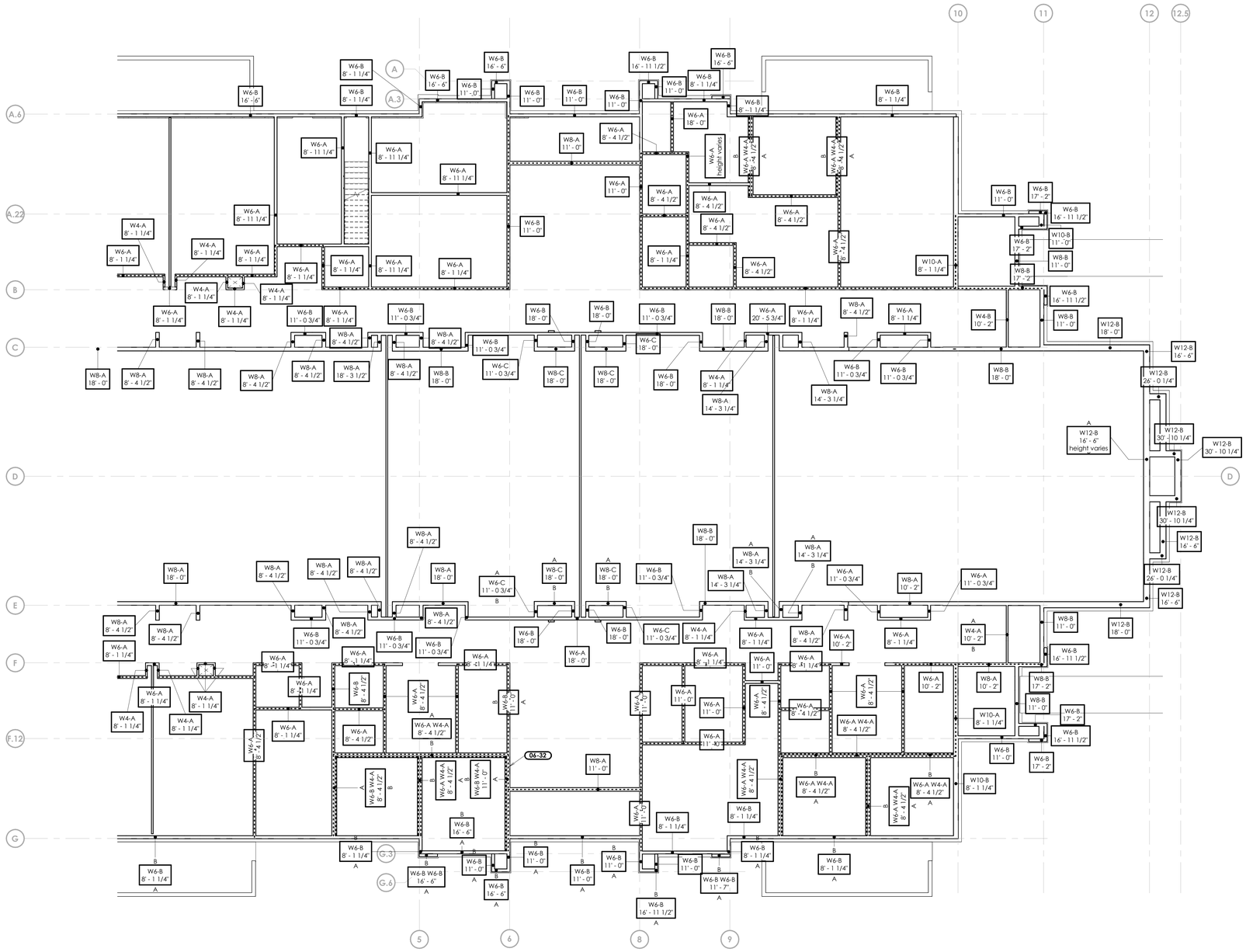

1 Main Floor Wall Types Plan

Scale: 1/8" = 1'-0"

0' 4' 8' 16' 32'

bhd ARCHITECTS
www.bhdarchitects.com
Phone 801.571.0010
Fax 801.571.0303
Toll Free 888.571.0010
65 East Wadsworth Park Drive
Suite 205 Draper, Utah 84020

LICENSED ARCHITECT
Lafe Theodore Harris
15 Aug 2024
6758878-0301
STATE OF UTAH

THE CHURCH OF JESUS CHRIST OF LATTER-DAY SAINTS

Orem YSA 3rd 10 Ward Building
Orem UT YSA 3rd Stake

Approx. 1700 West 575 South
Vineyard, Utah 84059

Owner #: 590-1876
Plan Series: 2024.10 Yard S/C
County Parcel: 57-226-0001
BID #: 2244
Date: 15 Aug 2024

Drawing Issue and Revision Schedule

#	Date	Description
1	15 Aug 2024	Bid Drawings

Wall Types Plan

A104b

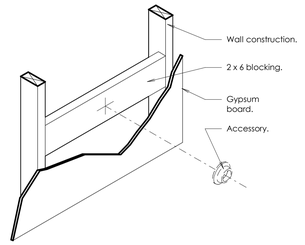

A Typical Wall Blocking Detail
Not to Scale

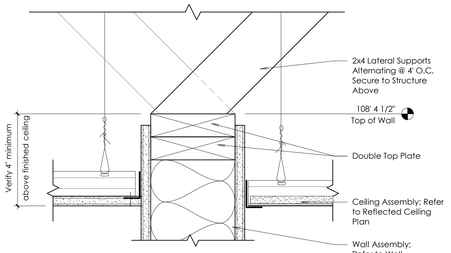

B Wall Partition Termination
Scale: 3" = 1'-0"

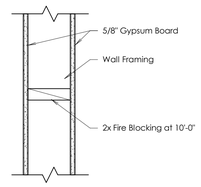

C Typical Fire Stop Detail
Scale: 1 1/2" = 1'-0"

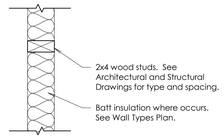

D Wall Type W4-A
Scale: 1 1/2" = 1'-0"

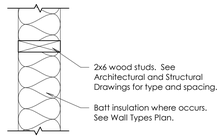

F Wall Type W6-A
Scale: 1 1/2" = 1'-0"

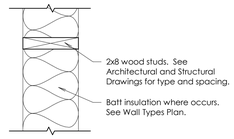

L Wall Type W8-A
Scale: 1 1/2" = 1'-0"

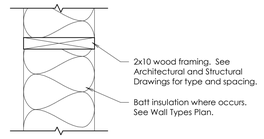

Q Wall Type W10-A
Scale: 1 1/2" = 1'-0"

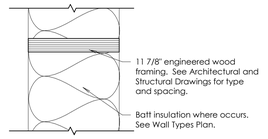

S Wall Type W12-A
Scale: 1 1/2" = 1'-0"

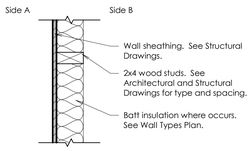

E Wall Type W4-B
Scale: 1 1/2" = 1'-0"

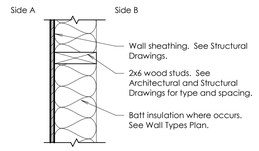

G Wall Type W6-B
Scale: 1 1/2" = 1'-0"

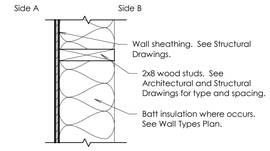

M Wall Type W8-B
Scale: 1 1/2" = 1'-0"

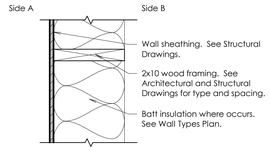

R Wall Type W10-B
Scale: 1 1/2" = 1'-0"

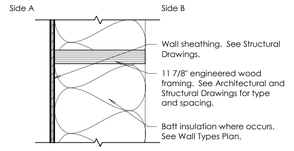

T Wall Type W12-B
Scale: 1 1/2" = 1'-0"

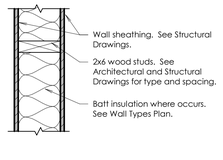

H Wall Type W6-C
Scale: 1 1/2" = 1'-0"

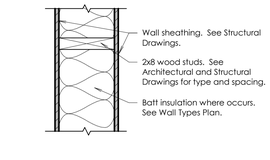

N Wall Type W8-C
Scale: 1 1/2" = 1'-0"

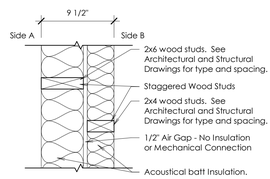

J Wall Type W6-A W4-A
Scale: 1 1/2" = 1'-0"

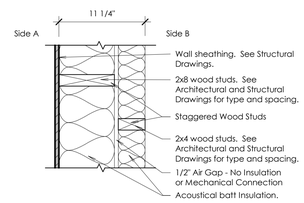

P Wall Type W8-B W4-A
Scale: 1 1/2" = 1'-0"

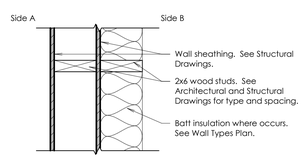

K Wall Type W6-B W6-B
Scale: 1 1/2" = 1'-0"

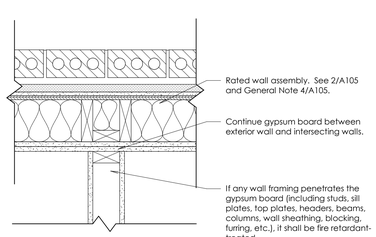

1 Rated Wall Intersection
Scale: 1 1/2" = 1'-0"

General Wall Types Notes:

1. See A106 for gypsum board layers and interior finishes. See interior elevations for the extents of tile and sisal.
2. See A104 for acoustic insulation locations.
3. Refer to structural sheets for structural rquirements.
4. Exterior wall 2-hour rated and non-combustible walls:
   - A. All lumber and sheathing at exterior walls shall be fire-retardant treated.
   - B. All SCLs at exterior walls shall be treated with intumescent paint on all sides except the side attached to fire-retardant treated sheathing.
   - C. All intumescent paint applications and treatment shall be inspected by a special inspector.

Design No. U302
Bearing Wall Rating — 2 HR.
Finish Rating — 59 Min.

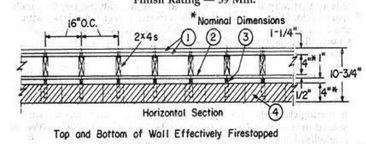

Top and Bottom of Wall Effectively Firestopped

1. **Gypsum Board* —** 5/8 in. thick, two layers applied either horizontally or vertically. Inner layer attached to studs with 6d cement coated nails 1-7/8 in. long, 0.0915 in. shank diam and 1/4 in. diam heads spaced 8 in. OC. Outer layer attached to studs over inner layer with 8d cement coated nails 2-3/8 in. long, 0.113 in. shank diam and 9/32 in. diam heads, spaced 8 in. OC. Vertical joints located over studs. Vertical and horizontal joints between inner and outer layers staggered. Outer layer joints covered with fiber tape and compound, nailheads covered with joint compound. As an alternate, nom 3/32 in. thick gypsum veneer plaster may be applied to the entire surface of Classified veneer base-board. Joints reinforced. Wallboard other than 48 in. wide must be applied horizontally.
   AMERICAN GYPSUM CO —Types AG-C, AGX-11, AGX-8, AGX-10, AGX-5, AGX-C.
   BEIJING NEW BUILDING MATERIALS CO LTD — Type DBX-1.
   BPB AMERICA INC —Types 1, FRPC, SF3, EGRG, ProRoc Type C or ProRoc Type X.
   BPB CANADA INC —ProRoc Type C, ProRoc Type X or ProRoc Type Abuse-Resistant.
   CANADIAN GYPSUM COMPANY —Types AR, C, IP-AR, IP-X1, IP-X2, IPC-AR, SCX, SHX, WRC, WRX.
   G-P GYPSUM CORP, SUB OF GEORGIA-PACIFIC CORP —Types 5, 9, C, DAP, DD, DA, DGG, DS, GPFS1, GPFS6.
   LAFARGE NORTH AMERICA INC —Types LGFC2, LGFC2A, LGFC3, LGFC6, LGFC6A, LGFC-C, LGFC-C/A.
   NATIONAL GYPSUM CO —Types FSK-C, FSK-G, FSW, FSW-C, FSW-G.
   PABCO GYPSUM, DIV OF PACIFIC COAST BUILDING PRODUCTS INC —Type C, PG-3, PG-4, PG-5, PG-9 or PG-C.
   SIAM GYPSUM INDUSTRY (SARABURI) CO LTD —Type EX-1
   STANDARD GYPSUM L L C —Type SGC, SG-C or SGC-G.
   TEMPLE-INLAND FOREST PRODUCTS CORP —Type T, VPB-Type T or TG-C.
   UNITED STATES GYPSUM CO —Types AR, C, IP-AR, IP-X1, IP-X2, IPC-AR, SCX, SHX, WRC, WRX.
   USG MEXICO S A DE C V —Types AR, C, IP-AR, IP-X1, IP-X2, IPC-AR, SCX, SHX, WRC or WRX.

1A. **Gypsum Board* —** (As an alternate to Item 1) — Nom 3/4 in. thick, installed as described in Item 1.
   CANADIAN GYPSUM COMPANY —Types AR, IP-AR, IPC-AR.
   UNITED STATES GYPSUM CO —Types AR, IP-AR, IPC-AR,
   USG MEXICO S A DE C V —Types AR, IP-AR, -IPC-AR.

2. **Sheathing —** 1/2 in. thick exterior gypsum sheathing, 24 in. wide sheets, T&G edges. Min weight of sheets 1800 lb per 1000 sq ft, min thickness 0.480 in. Attached to studs horizontally with 1-3/4 in. long, 11d, 7/16 in. diam flathead galv roofing nails spaced 6 in. OC. Vertical joints located over studs and staggered between adjacent rows.
3. **Corrugated Wall Ties —** 3/4 in. wide by 6-5/8 in. long, 20 MSG galv steel. Attached to each stud with 2-3/8 in. long 8d cement coated nails, every sixth course of bricks.
4. **Clay Face Bricks —** 2-1/4 by 3-3/4 by 8 in. with cored holes, laid in full bed of mortar 3/8 to 1/2 in. thick consisting of three parts of clean sharp sand to one part of portland cement (proportioned by vol) and 15 percent hydrated lime (by cement vol).

*Bearing the UL Classification Mark

2 Rated Wall Assembly
Scale: 1 1/2" = 1'-0"

bhd ARCHITECTS
www.bhdarchitects.com
Phone 801.571.0010
Fax 801.571.0303
Toll Free 888.571.0010
65 East Wadsworth Park Drive
Suite 205 Draper, Utah 84020

LICENSED ARCHITECT
Lafe Theodore Harris
15 Aug 2024
6736878-0301
STATE OF UTAH

THE CHURCH OF JESUS CHRIST OF LATTER-DAY SAINTS

Orem YSA 3rd 10 Ward Building
Orem UT YSA 3rd Stake

Approx. 1700 West 575 South
Vineyard, Utah 84059

Owner #: 590-1876
Plan Series: 2024 10 Ward SC
County Parcel: 59:226:0001
BID #: 2344
Date: 13 Aug 2024

Drawing Issue and Revision Schedule

#	Title	Date
1	Bid Drawings	13 Aug 2024

Wall Types Details

A105

Interior Finishes Schedule - First Floor

Number	Name	Floor Finish	Base / Base Finish	Wall Finish	Comments
101	Interview	F1	B1	W2	C2
102	Interview	F1	B1	W2	C2
103	Bishop	F1	B1	W2	C2
104	Bishop	F1	B1	W2	C2
105	Waiting	F1	B1	W2	C2
106	Clerk	F1	B1	W2	C2
107	Room	F1	B1	W2	C2
108	Room	F1	B1	W2	C2
109	Room	F1	B1	W2	C2
110	Room	F1	B1	W2	C2
111	Hallway	F1	B1	W2	
112	Room	F1	B1	W2	C2
113	Room	F1	B1	W2	C2
114	Serving Area	F4	B4	W1	
115	Stair	F2/F10	B1	W1	
116	Family Restroom	F5	B4	W1/W4	
117	Room	F1	B1	W2	C2
118	Table/Chair Storage	F1	B1	W3	
119	Vestibule	F2	B1	W1	
120	Foyer	F1	B1	W2	C2
121	Snow Storage	F7	B5	W1	
122	Clerk	F1	B1	W2	C2
123	Interview	F1	B1	W2	C2
124	Interview	F1	B1	W2	C2
125	Stake President	F1	B1	W2	C2
126	Waiting	F1	B1	W2	C2
127	Family Restroom	F5	B4	W1/W4	
128	High Council	F1	B1	W2	C2
129	Vestibule	F2	B1	W1	
130	Vestibule	F2	B1	W1	
131	Materials Center	F1	B1	W2	C2
132	Bishop	F1	B1	W2	

Interior Finishes Schedule - First Floor

Number	Name	Floor Finish	Base / Base Finish	Wall Finish	Comments
133	Interview	F1	B1	W2	
134	Interview	F1	B1	W2	
135	Bishop	F1	B1	W2	
136	Waiting	F1	B1	W2	
137	Clerk	F1	B1	W2	
138	Hallway	F1	B1	W2	
139	Room	F1	B1	W2	C2
140	Room	F1	B1	W2	C2
141	Men	F5	B3/B4	W1/W4	
142	Women	F5	B3/B4	W1/W4	
143	Custodial	F5	B3/B4	W1/W4	
144	Custodial	F5	B3/B4	W1/W4	
145	Rostrum	F1	B1	W1	
146	Chapel	F1	B1	W1	
147	Cultural Center	F3	B2	W3	
148	Storage	F1	B1	W1	
149	Storage	F1	B1	W1	
150	Storage	F1	B1	W1	
151	Cultural Center	F3	B2	W3	
152	Storage	F1	B1	W1	
153	Chapel	F1	B1	W1	
154	Sacrament Preparation	F1	B1	W1	
155	Rostrum	F1	B1	W1	
156	Fire Riser	F7	B5	W1	
157	Vestibule	F2	B1	W1	
158	Interview	F1	B1	W2	C2
159	Interview	F1	B1	W2	C2
160	Bishop	F1	B1	W2	C2
161	Waiting	F1	B1	W2	C2
162	Clerk	F1	B1	W2	C2

Interior Finishes Schedule - First Floor

Number	Name	Floor Finish	Base / Base Finish	Wall Finish	Comments
163	Bishop	F1	B1	W2	C2
164	Room	F1	B1	W2	C2
165	Room	F1	B1	W2	C2
166	Room	F1	B1	W2	C2
167	Room	F1	B1	W2	C2
168	Room	F1	B1	W2	C2
169	Room	F1	B1	W2	C2
170	Hallway	F1	B1	W2	
171	Family Restroom	F5	B4	W1/W4	
172	Serving Area	F4	B4	W1	
173	Interview	F1	B1	W2	C2
174	Interview	F1	B1	W2	C2
175	Bishop	F1	B1	W2	C2
176	Waiting	F1	B1	W2	C2
177	Clerk	F1	B1	W2	C2
178	Bishop	F1	B1	W2	C2
179	Foyer	F1	B1	W2	C2
180	Vestibule	F2	B1	W1	
181	Technology	F1	B1	W1	
182	Family Restroom	F5	B4	W1/W4	
183	Room	F1	B1	W2	C2
184	Interview	F1	B1	W2	C2
185	Interview	F1	B1	W2	C2
186	Bishop	F1	B1	W2	C2
187	Waiting	F1	B1	W2	C2
188	Clerk	F1	B1	W2	C2
189	Bishop	F1	B1	W2	C2
190	Vestibule	F2	B1	W1	
201	Organ Chamber	F9	B6	W1	C1
202	Organ Chamber	F9	B6	W1	C1
203	Attic Access	F9			
204	Mechanical Equipment	F9			

Comments

C1	All sufaces painted black
C2	Chair rail. See B/A705.

Wall Finish Legend

W1	5/8" Gypsum Board - Painted - Textured per 09 0413
W2	Sisal Wall Covering Wainscot w/ Painted Gypsum Board above - Textured per 09 0413
W3	Sisal Wall Covering on Finished Gypsum Board
W4	Ceramic Tile - Refer to interior elevations for extent and accent tile locations
W5	Wood Sheathing - Painted
	2 layers 5/8" gypsum board

Base Finish Legend

B1	Carpet Base by Owner, see detail J/A705
B2	Metal Angle, see detail N/A705
B3	Coved Paver Tile, see detail L/A705
B4	Coved Paver Tile with Bullnose, See Detail K/A705 sim.
B5	Rubber Base
B6	No Base Required
B7	Coved Ceramic Tile with Bullnose, See Detail K/A705 sim.

Floor Finish Legend

F1	Broadloom Carpet by Owner
F2	Carpet Tile by Owner
F3	Wood Floor System
F4	Paver Tile - Thinset
F5	Porcelain Tile - Thickset
F7	Concrete - Painted
F8	Concrete - Sealed
F9	Wood Sheathing - Painted
F10	Stair Treads & Risers - Painted
T1	Aluminum Threshold See R,Q,P,T/A611
T2	Stone Threshold See S/A611
T3	Metal Transtion strip See N/A611
T4	Sound Control Threshold See M/A611

General Notes

A. For finishes in the Storage Building, see Sheet C801.

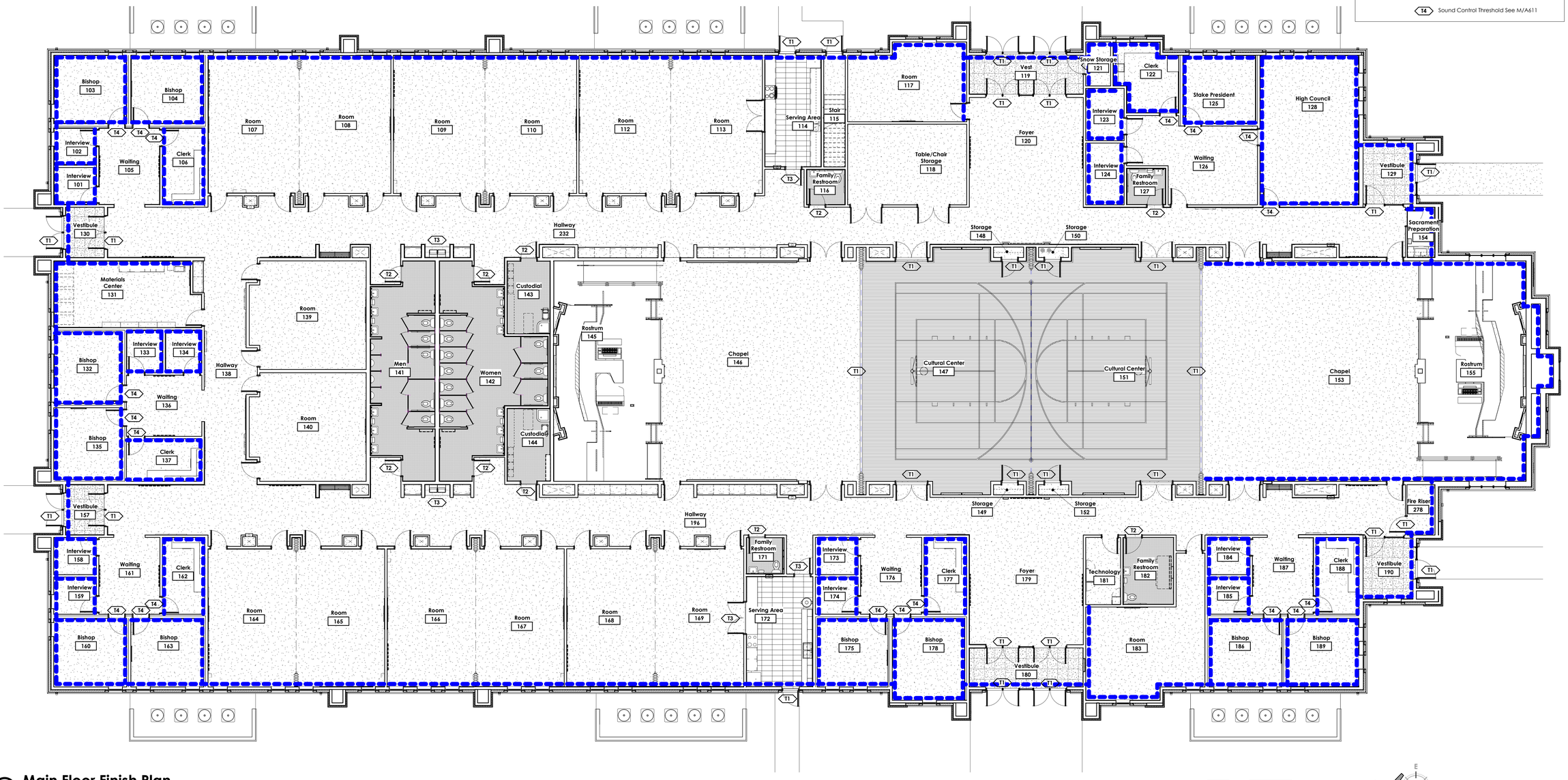

1 Main Floor Finish Plan

Scale: 1/8" = 1'-0"

0' 4' 8' 16' 32'

bhd ARCHITECTS
www.bhdarchitects.com
Phone 801.571.0010
Fax 801.571.0303
Toll Free 888.571.0010
65 East Wadsworth Park Drive
Suite 205 Draper, Utah 84020

LICENSED ARCHITECT Lafe Theodore Harris 15 Aug 2024 6758878-0301 STATE OF UTAH

THE CHURCH OF JESUS CHRIST OF LATTER-DAY SAINTS

Orem YSA 3rd 10 Ward Building
Orem UT YSA 3rd Stake

Approx. 1700 West 575 South
Vineyard, Utah 84059

Owner #: 590-1876
Plan Series: 2024 10 Ward SC
County Parcel: 39-235-0001
BHD #: 2344
Date: 15 Aug 2024

Drawing Issue and Revision Schedule

1	15 Aug 2024	Bid Drawings

Finish Plan

A106

Printed 8/19/2024 4:16:33 PM

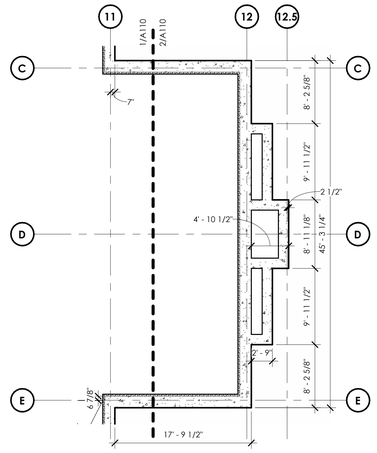

2 Foundation Dimension Plan

Scale: 1/8" = 1'-0"

1 Foundation Dimension Plan

Scale: 1/8" = 1'-0"

General Notes

A. Install dampproofing on the exterior face of all exterior foundation walls from 2" below finish grade down to the bottom of the foundation wall and across the top of the footing.
B. Refer to Enlarged Plumbing Plans for Additional Plumbing Information and Associated Fixture Locations.
C. Dimensions Shown to Slab Depressions are Determined based on the Best Information Available at the Time the Drawings were Completed. Dimensions shown are to Assist the Contractor Only and Shall Not be Used as a Substitute for Proper Contractor Coordination of Location of Mechanical, Plumbing and Electrical Elements Which Penetrate the Floor Slabs.
D. Coordinate All Dimensions with the Associated Trades and the Field Verified Measurements.
E. Refer to Floor Finish Plans for Floor Finishes Requiring Depressed Slab and Locations.

Keyed Notes

03-5 Recess concrete floor slab 2 1/8" below finished floor level for athletic wood flooring system.
03-6 Recess concrete floor slab 2" below finished floor level.
03-8 Slope slab to floor drain.

bhd ARCHITECTS
www.bhdarchitects.com
Phone 801.571.0010
Fax 801.571.0303
Toll Free 888.571.0010
65 East Wadsworth Park Drive
Suite 205 Draper, Utah 84020

LICENSED ARCHITECT Lafe Theodore Harris 15 Aug 2024 7-6896-0301 STATE OF UTAH

THE CHURCH OF JESUS CHRIST OF LATTER-DAY SAINTS

Orem YSA 3rd 10 Ward Building
Orem UT YSA 3rd Stake

Approx. 1700 West 575 South
Vineyard, Utah 84059

Owner #: 370-187x
Plan Series: 2024 10 Ward SIC
County Parcel: 37-226-0001
BHD #: 2344
Date: 15 Aug 2024

Drawing Issue and Revision Schedule		
#	Date	Description
1	15 Aug 2024	Bid Drawings

Foundation Dimension Plan

A110

General Notes

A. Unless noted otherwise, all eave soffits shall have (2) soffit vent strips; and all rake soffits shall have no vent strips.
B. Roof penetrations and penthouses are shown for reference only. Coordinate locations of all roof penetrations and penthouses with the mechanical and plumbing systems.
C. Paint all vents and combustion piping.

Keyed Notes

07-18	Asphalt shingle roofing over underlayments. Install secondary underlayment over the entire roof.
07-20	Valley Metal over Underlayment. Refer to Detail A/A122.
07-21	Prefinished Metal Cricket.
07-26	Prefinished Metal Rain Gutter. See Detail J/A502.
07-27	Prefinished Metal Downspout. Typical. See H/A502.
07-28	Prefinished metal ridge vent. See F/A122.
07-41	Prefinished metal hip vent. See B & C/A122.
10-25	Prefinished aluminum steeple. See A206 and A207.
22-15	Vent through roof, flue, or other roof penetration. Typical. See Roof Details and Mechanical and Plumbing Sheets. Paint all roof penetrations.
23-4	Prefinished metal penthouse. See E/A122 and Mechanical Drawings.
26-8	Snow melt heat trace. See Electrical Sheets.

Notes
I figured out why this is showing up.

Notes
I figured out why this is showing up.

1 Roof Plan
Scale: 1/8" = 1'-0"

0' 4' 8' 16' 32'

bhd ARCHITECTS
www.bhdarchitects.com
Phone 801.571.0010
Fax 801.571.0303
Toll Free 888.571.0010
65 East Wadsworth Park Drive
Suite 205 Draper, Utah 84020

LICENSED ARCHITECT
Lafe Theodore Harris
15 Aug 2024
6736896-0301
STATE OF UTAH

THE CHURCH OF JESUS CHRIST OF LATTER-DAY SAINTS

Orem YSA 3rd 10 Ward Building
Orem UT YSA 3rd Stake

Approx. 1700 West 575 South
Vineyard, Utah 84059

Owner #: 390-1876
Plan Series: 2024 10 Ward SC
County Parcel: 39-228:0001
BHD #: 2344
Date: 15 Aug 2024

Drawing Issue and Revision Schedule

#	Date	Description
1	15 Aug 2024	Bid Drawings

Roof Plan

A121

Printed 8/19/2024 7:52:13 PM

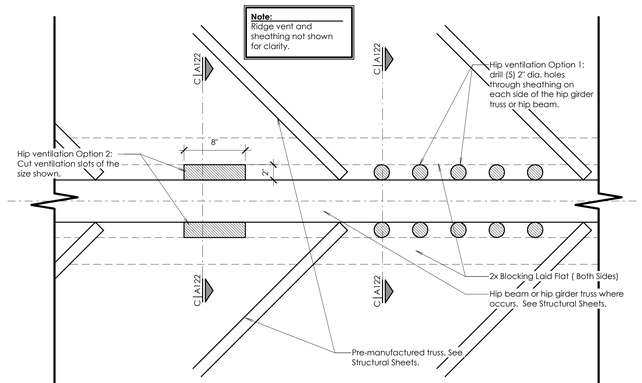

B Hip Vent Plan

Scale: 1 1/2" = 1'-0"

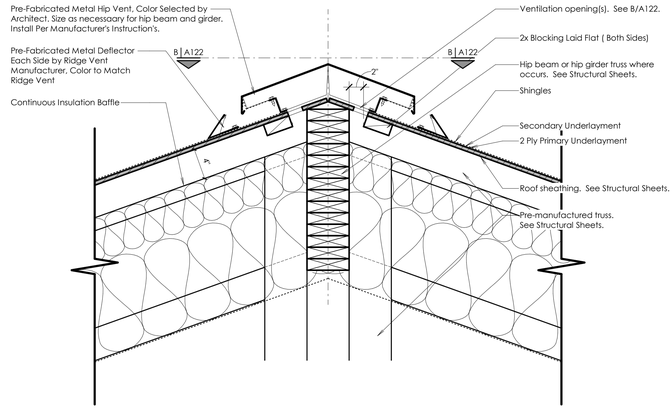

C Hip Vent Section

Scale: 1 1/2" = 1'-0"

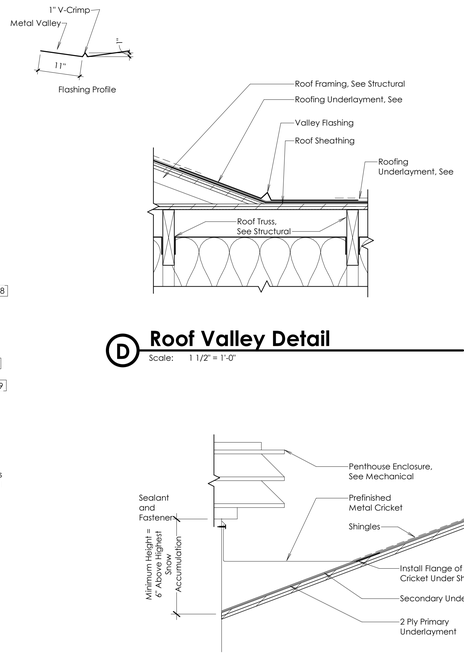

A Entry Gable Valley Flashing

Scale: 1/2" = 1'-0"

D Roof Valley Detail

Scale: 1 1/2" = 1'-0"

E Penthouse Detail

Scale: 1 1/2" = 1'-0"

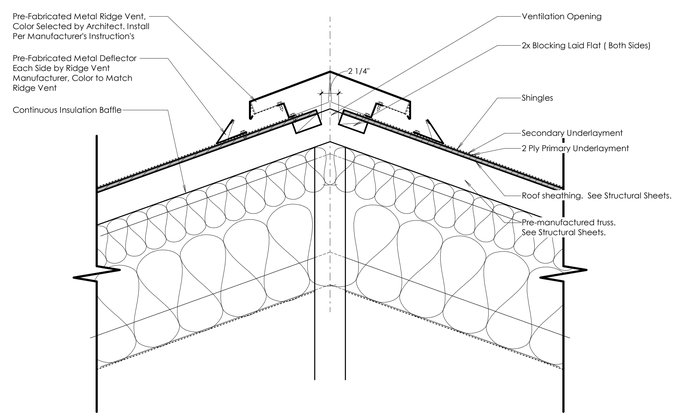

F Ridge Vent Section

Scale: 1 1/2" = 1'-0"

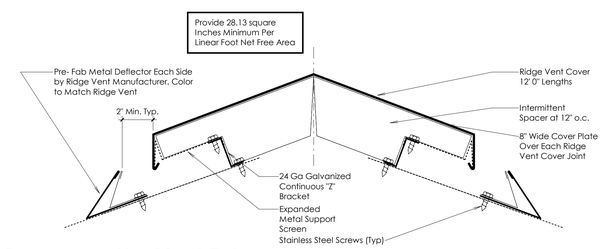

G Ridge and Hip Vent Enlarged

Scale: 3" = 1'-0"

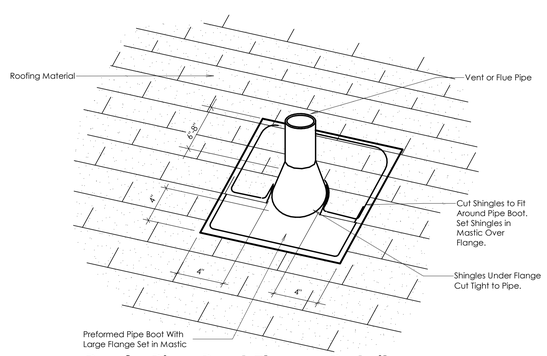

I Roof - Pipe Boot Flange Detail

Scale: 1/4" = 1'-0"

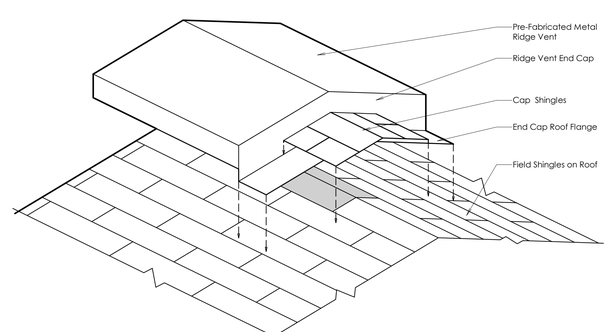

J Roof - Ridge Vent End Detail

Scale: 1 1/2" = 1'-0"

bhd ARCHITECTS
www.bhdarchitects.com
Phone 801.571.0010
Fax 801.571.0303
Toll Free 888.571.0010
65 East Wadsworth Park Drive
Suite 205 Draper, Utah 84020

LICENSED ARCHITECT Lafe Theodore Harris 15 Aug 2024 6736878-0301 STATE OF UTAH

THE CHURCH OF JESUS CHRIST OF LATTER-DAY SAINTS

Orem YSA 3rd 10 Ward Building
Orem UT YSA 3rd Stake

Approx. 1700 West 575 South
Vineyard, Utah 84059

Date: 15 Aug 2024
BHD #: 2344
County Parcel: 59:228:0001
Plan Series: 2024 10 Ward-SC
Owner #: 590-1878

Drawing Issue and Revision Schedule

#	Date	Description
1	15 Aug 2024	Bid Drawings

Roof Details

A122

8/16/2024 1:44:22 PM

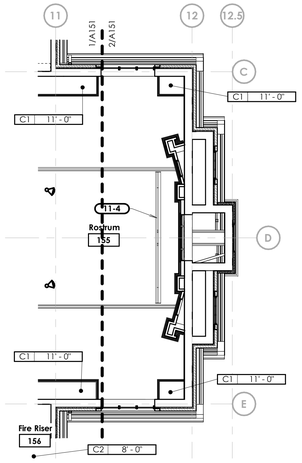

Reflected Ceiling Symbol Legend

Ceiling Type — C1 | 8' -0" — Ceiling Height from main floor

- Ceiling Air Supply Diffuser, Size Varies, Refer to Mechanical Drawings.
- Ceiling Air Return Register, Size Varies, Refer to Mechanical Drawings.
- Ceiling Air Exhaust Fan Register, Size Varies, Refer to Mechanical Drawings.
- Light Fixture, Refer to Electrical Drawings.
- Light Fixture, Refer to Electrical Drawings.
- Pendant Light Fixture, Refer to Electrical Drawings.
- Recessed Downlight Fixture, Refer to Electrical Drawings.
- Directional Downlight Fixture, Refer to Electrical Drawings.
- Recessed Speaker Refer to AV Drawings
- Exit Sign Ceiling Mounted w/ Arrows as shown, Refer to Electrical Drawings.
- Ceiling Mounted Occupancy Sensor, Refer to Electrical Drawings.

Ceiling Types Legend:

C1 Gypsum Board Attached to Structure, Textured, Painted

C2 Gypsum Board Suspended From Structure, Textured, Painted

C3 Gypsum Board Attached to Structure, with Glue-on Acoustical Tile

C4 Gypsum Board Suspended From Structure, with Glue-on Acoustical Tile

C5 Prefinished Metal Soffit. Fill attic space above with loose-fill insulation up to 4" from roof sheathing.

C6 2' x 2' acoustical lay-in tile in suspended grid.

General Ceiling Plan Notes:

A. Wall Mounted Light Fixtures that Occur Below Ceiling Line are Not Shown.
B. Mounting of Speakers: Corridor - See C/A505.
C. Provide Seismic Bracing at All Ceiling Suspension Systems.
D. Suspension Ceiling System Details, See G, H/A505.
E. Install R-30 Acoustical Batt Insulation Over Ceiling in Rooms: 101, 102, 103, 104, 106, 107, 108, 109, 110, 112, 113, 122, 123, 124, 125, 128, 132, 133, 134, 135, 137, 158, 159, 160, 162, 163, 164, 165, 166, 167, 168, 169, 173, 174, 175, 177, 178, 184, 185, 186, 188, and 189.
F. Install R-30 thermal batt insulation over ceiling in rooms 129, 130, 156, 157, and 190.
G. Fill attic space above all exterior Type C5 ceilings with loose-fill insulation up to 4" from roof sheathing.
H. All suspended ceiling systems shall be installed to the manufacturer's specifications and requirements.
I. Where shown, acoustical ceiling tiles shall be full tiles across with a border of gypsum board as shown on the drawings.
J. Install ceiling step at rooms 107, 108, 109, 110, 112, 113, 128, 164, 165, 166, 167, 168, and 169. See building sections and D and E/A504.

Keyed Notes

07-27 Prefinished Metal Downspout. Typical. See H/A502.
09-11 Gypsum Board Control Joint. Typical. See B/A505.
09-24 Painted wood trim. See J/A704.
09-25 Light cove. See A/A505.
11-4 Projection Screen. See D/A505.
11-6 Basketball Backboard & Support Frame. See F/A505.

2 Reflected Ceiling Plan

Scale: 1/8" = 1'-0"

Note:
For lights, speakers, fire sprinkler heads, etc., mounted on the ceiling, see the respective engineers' sheets. Coordinated locations will be shown on this sheet prior to installation.

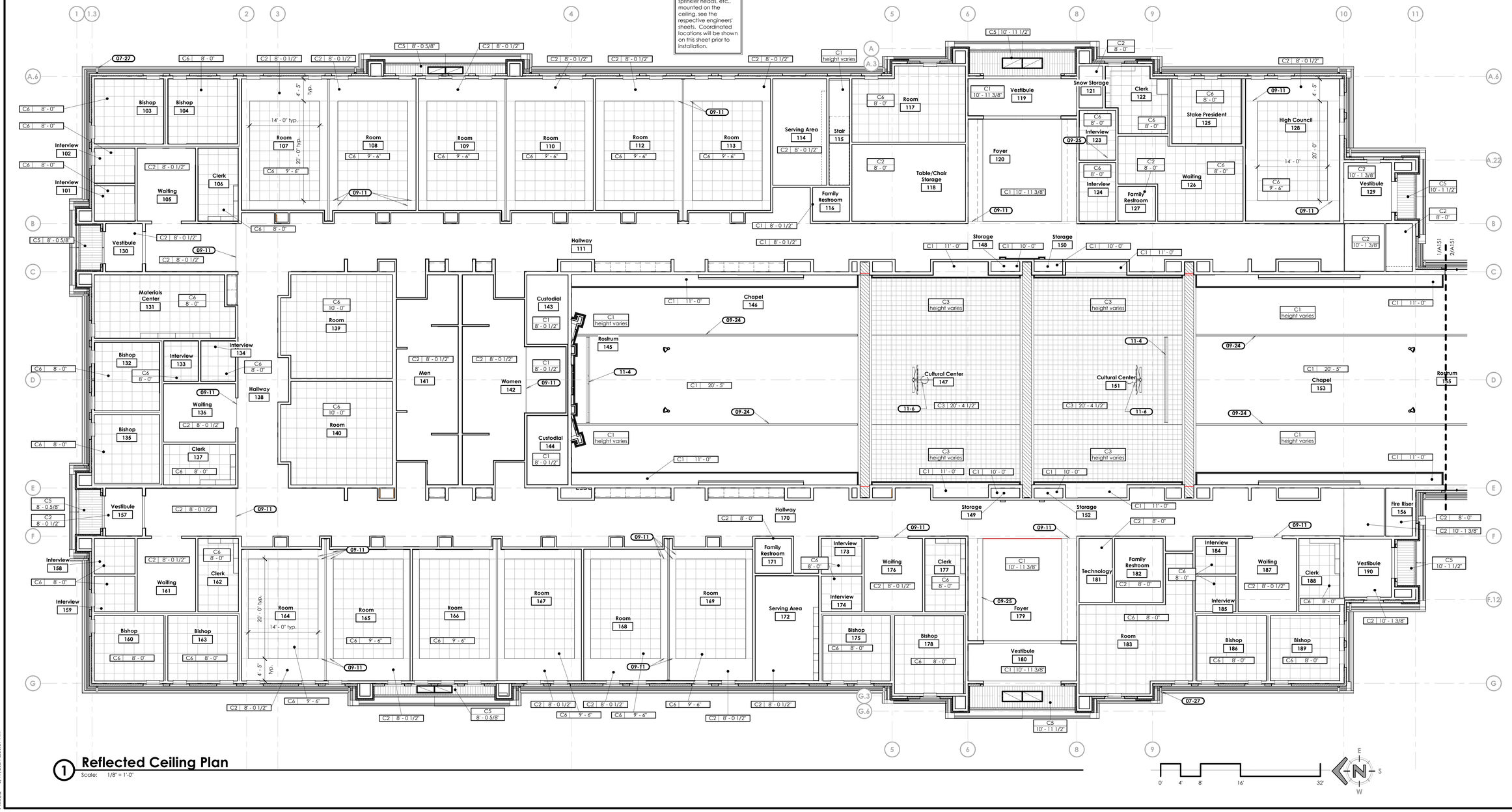

1 Reflected Ceiling Plan

Scale: 1/8" = 1'-0"

0' 4' 8' 16' 32'

bhd ARCHITECTS
www.bhdarchitects.com
Phone 801.571.0010
Fax 801.571.0303
Toll Free 888.571.0010
65 East Wadsworth Park Drive
Suite 205 Draper, Utah 84020

LICENSED ARCHITECT Lafe Theodore Harris 15 Aug 2024 6758878-0301 STATE OF UTAH

THE CHURCH OF JESUS CHRIST OF LATTER-DAY SAINTS

Orem YSA 3rd 10 Ward Building
Orem UT YSA 3rd Stake

Approx 1700 West 575 South
Vineyard, Utah 84059

Owner #: 390-1876
Plan Series: 2024 10 Ward SC
County Parcel: 39-226:0001
BID #: 2344
Date: 15 Aug 2024

Drawing Issue and Revision Schedule

#	Date	Description
1	15 Aug 2024	Bid Drawings

Reflected Ceiling Plan

A151

Printed 8/19/2024 2:36:59 PM

General Notes

A. Install brick expansion joints at 30 feet o.c. minimum, and at inside corners of brick. Coordinate exact locations with the Architect prior to installation.

Keyed Notes

04-1	Manufactured Stone Veneer System.
04-2	Brick veneer field course. Brick Type#1.
04-3	Brick veneer soldier course. Brick Type #2.
04-4	Manufactured stone veneer capstone.
04-5	Brick veneer stacked course. Brick Type #2.
04-6	Brick veneer rowlock course. Brick Type #2.
04-11	Thin brick veneer corner piece in soldier course. Brick Type #2. See E/A211.
04-15	Thin brick veneer field course. Brick Type #1. See F/A211.
04-16	Thin brick veneer rowlock course. Brick Type #2. See D/A211.
07-27	Prefinished Metal Downspout. Typical. See H/A502.
07-28	Prefinished metal ridge vent. See F/A122.
07-40	Prefinished metal fascia return. See A & B/A503.
07-42	Prefinished headwall flashing. See A/A502.
08-8	Vinyl Framed Window, Refer to Window Elevations A601.
08-12	Aluminum storefront spandrel glass windows. See enlarged elevations, Window Schedule, and A612.
10-5	Engraved Stone Sign Panel.
10-25	Prefinished aluminum steeple. See A206 and A207.
10-27	Engraved Stone Address Sign.
21-2	Fire department connection with locking knox plugs. Coordinate model with Fire Department requirements.
22-15	Vent through roof, flue, or other roof penetration. Typical. See Roof Details and Mechanical and Plumbing Sheets. Paint all roof penetrations.
23-4	Prefinished metal penthouse. See E/A122 and Mechanical Drawings.

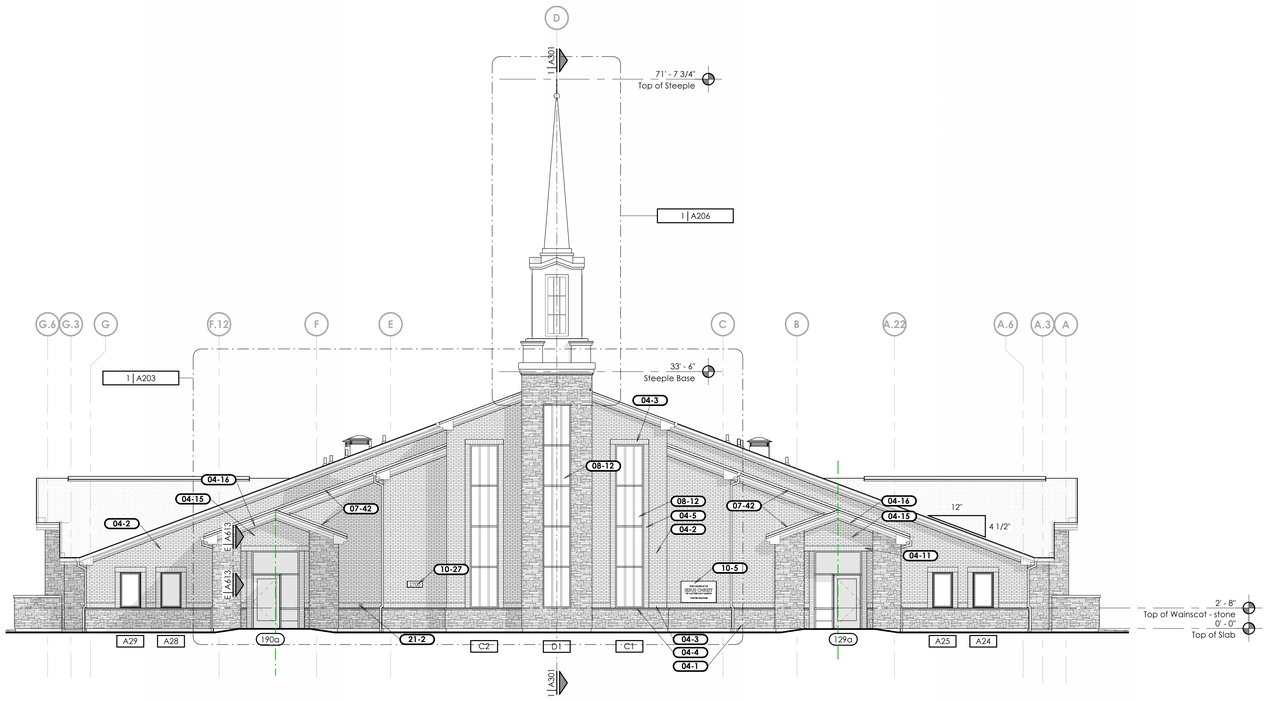

1 South Elevation

Scale: 1/8" = 1'-0"

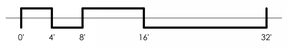

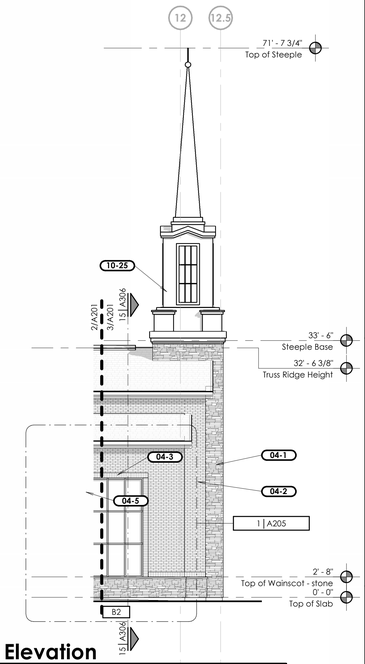

3 West Elevation

Scale: 1/8" = 1'-0"

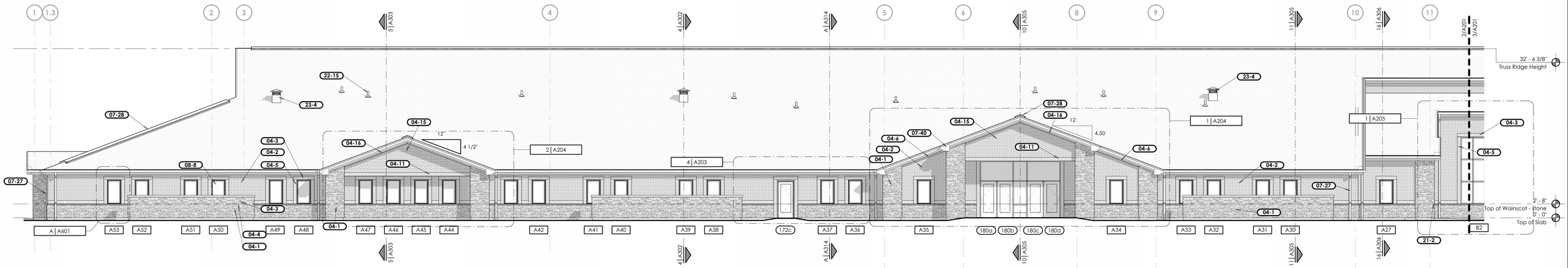

2 West Elevation

Scale: 1/8" = 1'-0"

bhd ARCHITECTS
www.bhdarchitects.com
Phone 801.571.0010
Fax 801.571.0303
Toll Free 888.571.0010
65 East Wadsworth Park Drive
Suite 205 Draper, Utah 84020

LICENSED ARCHITECT
Lafe Theodore Harris
15 Aug 2024
7738896-0301
STATE OF UTAH

THE CHURCH OF JESUS CHRIST OF LATTER-DAY SAINTS

Orem YSA 3rd 10 Ward Building
Orem UT YSA 3rd Stake

Approx. 1700 West 575 South
Vineyard, Utah 84059

Owner #: 590-1878
Plan Series: 2024 10 Ward SFC
County Parcel: 37-226-0001
BHD #: 2344
Date: 15 Aug 2024

Drawing Issue and Revision Schedule		
#	Date	Description
1	15 Aug 2024	Bid Drawings

Exterior Elevations

A201

General Notes

A. Install brick expansion joints at 30 feet o.c. minimum, and at inside corners of brick. Coordinate exact locations with the Architect prior to installation.

Keyed Notes

04-1	Manufactured Stone Veneer System.
04-2	Brick veneer field course. Brick Type#1.
04-3	Brick veneer soldier course. Brick Type #2.
04-4	Manufactured stone veneer capstone.
04-5	Brick veneer stacked course. Brick Type #2.
04-6	Brick veneer rowlock course. Brick Type #2.
04-11	Thin brick veneer corner piece in soldier course. Brick Type #2. See E/A211.
04-12	Mechanical enclosure wall. See C and D/C504 and Structural Sheets.
04-15	Thin brick veneer field course. Brick Type #1. See F/A211.
04-16	Thin brick veneer rowlock course. Brick Type #2. See D/A211.
07-18	Asphalt shingle roofing over underlayments. Install secondary underlayment over the entire roof.
07-26	Prefinished Metal Rain Gutter. See Detail J/A502.
07-27	Prefinished Metal Downspout. Typical. See H/A502.
07-28	Prefinished metal ridge vent. See F/A122.
07-40	Prefinished metal fascia return. See A & B/A503.
07-41	Prefinished metal hip vent. See B & C/A122.
08-8	Vinyl Framed Window. Refer to Window Elevations A601.
10-25	Prefinished aluminum steeple. See A206 and A207.
22-15	Vent through roof, flue, or other roof penetration. Typical. See Roof Details and Mechanical and Plumbing Sheets. Paint all roof penetrations.
23-4	Prefinished metal penthouse. See E/A122 and Mechanical Drawings.

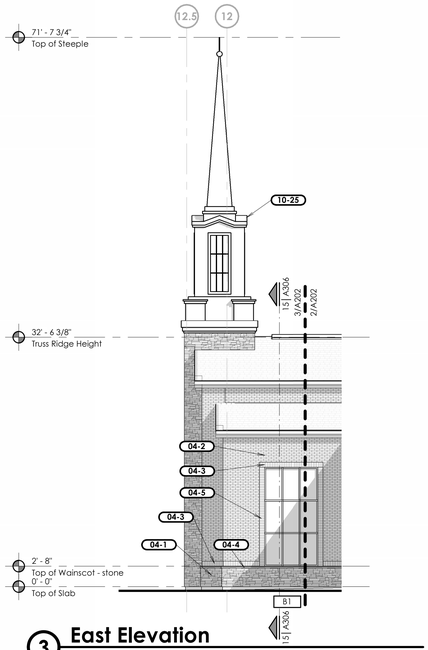

3 East Elevation

Scale: 1/8" = 1'-0"

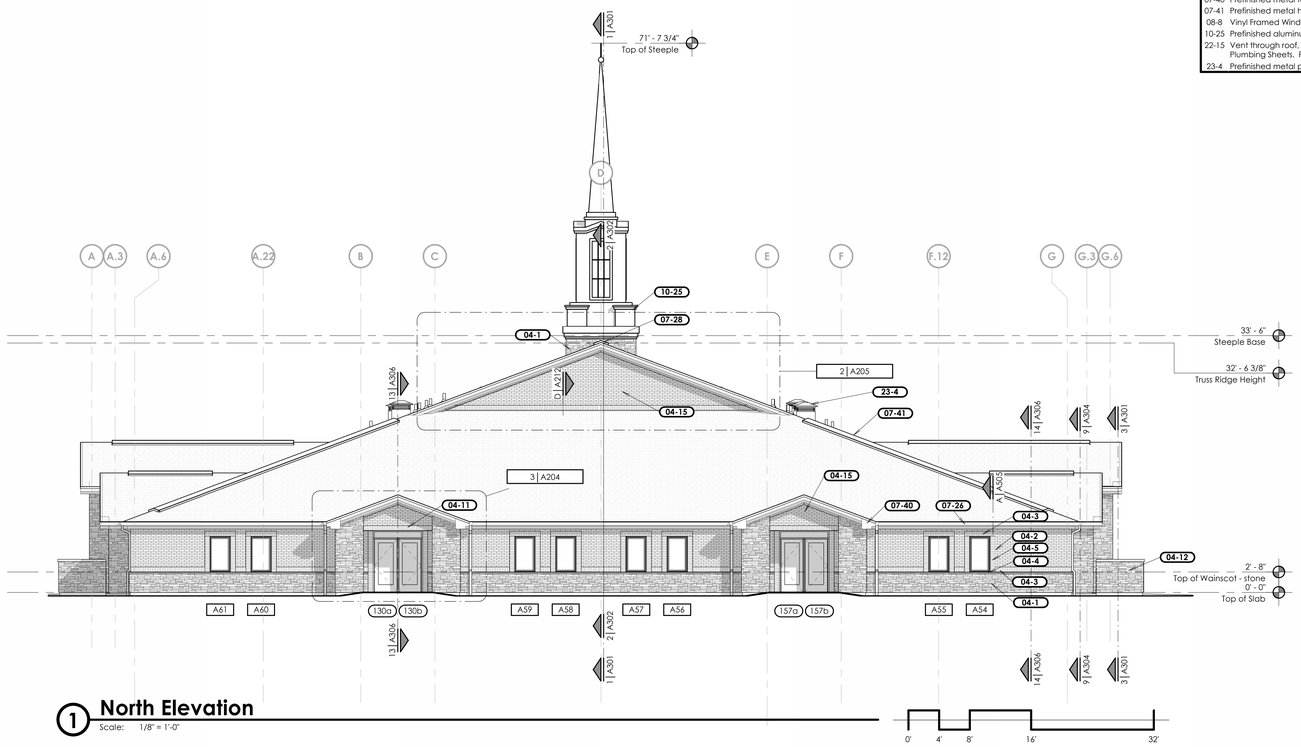

1 North Elevation

Scale: 1/8" = 1'-0"

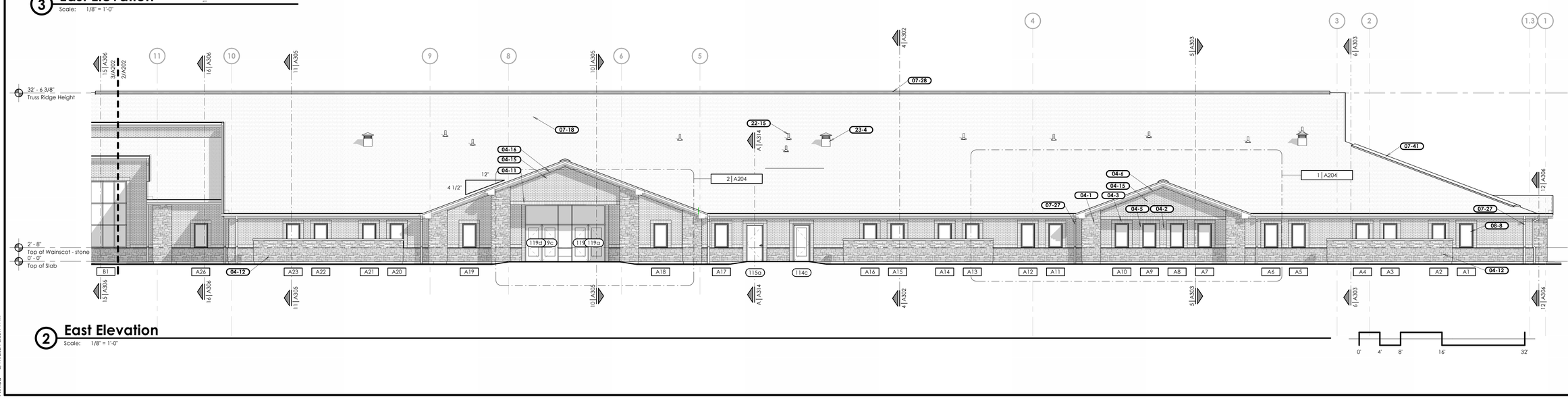

2 East Elevation

Scale: 1/8" = 1'-0"

bhd ARCHITECTS
www.bhdarchitects.com
Phone 801.571.0010
Fax 801.571.0303
Toll Free 888.571.0010
65 East Wadsworth Park Drive
Suite 205 Draper, Utah 84020

LICENSED ARCHITECT
Lafe Theodore Harris
15 Aug 2024
7738896-0301
STATE OF UTAH

THE CHURCH OF JESUS CHRIST OF LATTER-DAY SAINTS

Orem YSA 3rd 10 Ward Building
Orem UT YSA 3rd Stake

Approx. 1700 West 575 South
Vineyard, Utah 84059

BHD #: 2344
Date: 15 Aug 2024
County Parcel: 39-228-0001
Plan Series: 2024 10 Ward NC
Owner #: 390-1876

Drawing Issue and Revision Schedule

No.	Description	Date
1	Bid Drawings	15 Aug 2024

Exterior Elevations

A202

Printed 8/19/2024 8:03:14 PM

General Notes

A. Install brick expansion joints at 30 feet o.c. minimum, and at inside corners of brick. Coordinate exact locations with the Architect prior to installation.

Keyed Notes

04-1	Manufactured Stone Veneer System.
04-2	Brick veneer field course. Brick Type#1.
04-3	Brick veneer soldier course. Brick Type #2.
04-4	Manufactured stone veneer capstone.
04-5	Brick veneer stacked course. Brick Type #2.
04-6	Brick veneer rowlock course. Brick Type #2.
07-23	Metal Drip Edge Flashing. See J/A502.
07-25	Prefinished Metal Fascia. See J/A502.
07-26	Prefinished Metal Rain Gutter. See Detail J/A502.
07-42	Prefinished headwall flashing. See A/A502.
10-25	Prefinished aluminum steeple. See A206 and A207.
21-2	Fire department connection with locking knox plugs. Coordinate model with Fire Department requirements.
22-15	Vent through roof, flue, or other roof penetration. Typical. See Roof Details and Mechanical and Plumbing Sheets. Paint all roof penetrations.
23-4	Prefinished metal penthouse. See E/A122 and Mechanical Drawings.

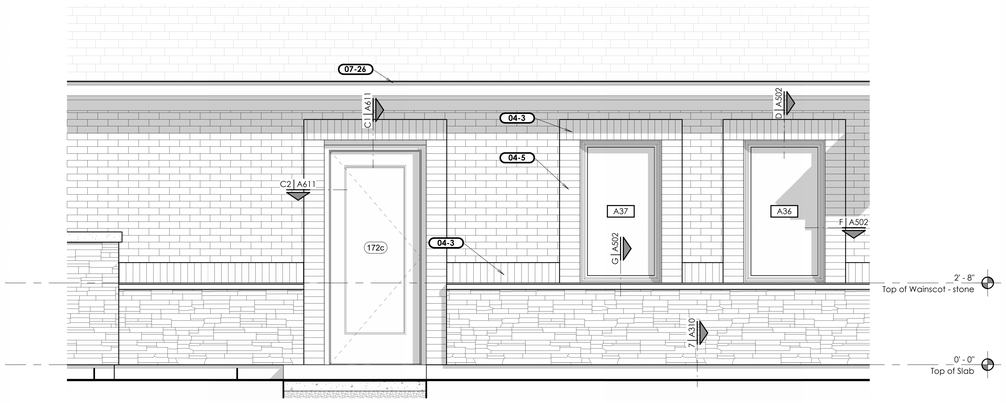

4 Door and Window Elevation

Scale: 1/2" = 1'-0"

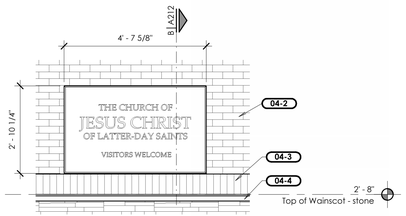

3 Stone Meetinghouse Sign

Scale: 1/2" = 1'-0"

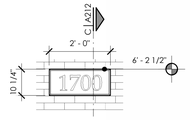

2 Stone Address Sign

Scale: 1/2" = 1'-0"

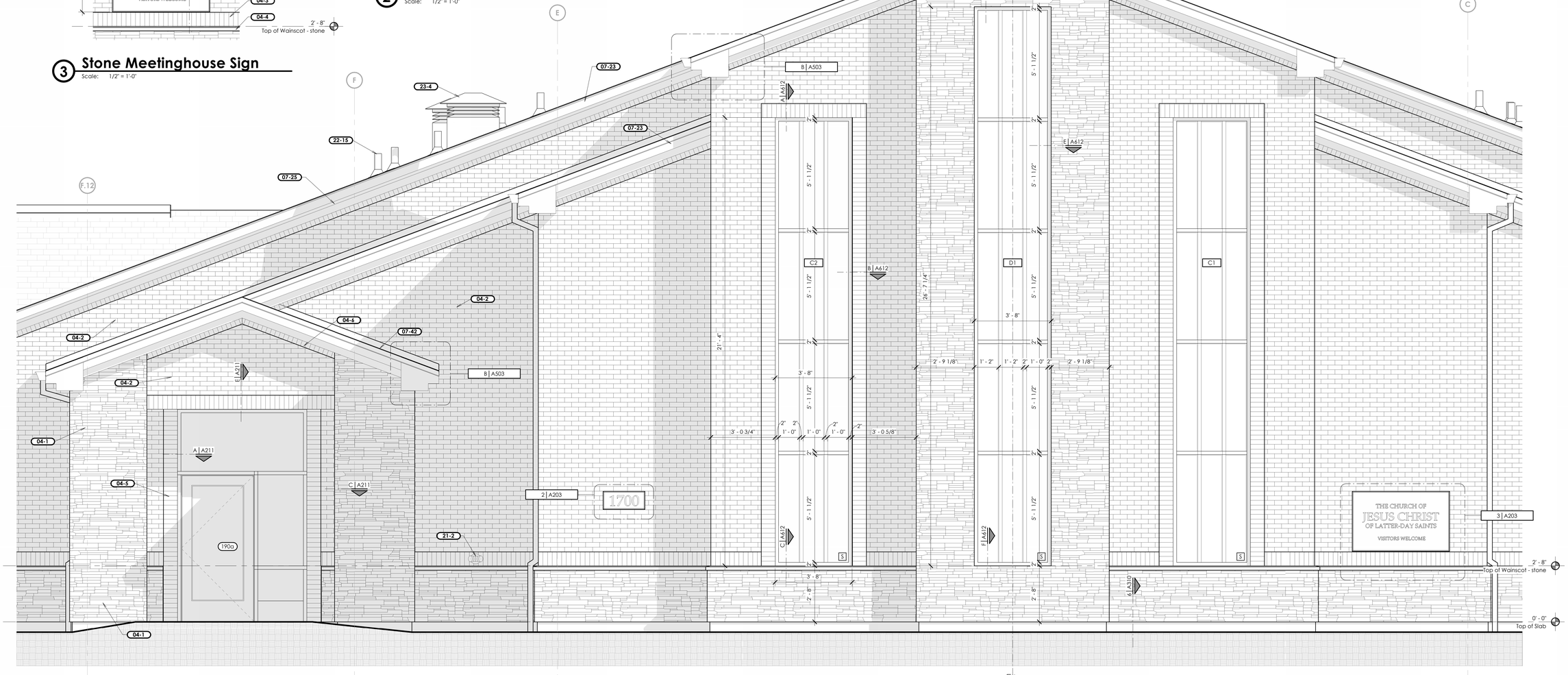

1 Steeple Wall Elevation and Standard window Types

Scale: 1/2" = 1'-0"

bhd ARCHITECTS
www.bhdarchitects.com
Phone 801.571.0010
Fax 801.571.0303
Toll Free 888.571.0010
65 East Wadsworth Park Drive
Suite 205 Draper, Utah 84020

LICENSED ARCHITECT
Lafe Theodore Harris
15 Aug 2024
7738896-0301
STATE OF UTAH

THE CHURCH OF JESUS CHRIST OF LATTER-DAY SAINTS

Orem YSA 3rd 10 Ward Building
Orem UT YSA 3rd Stake

Approx. 1700 West 575 South
Vineyard, Utah 84059

Date: 15 Aug 2024
BHD #: 2344
County Parcel: 37-228-0001
Plan Series: 2024 10 Ward SC
Owner #: 390-18-K

Drawing Issue and Revision Schedule

#	Date	Description
1	15 Aug 2024	Bid Drawings

Enlarged Exterior Elevations

A203

Plotted 8/19/2024 8:13:21 PM

General Notes

A. Install brick expansion joints at 30 feet o.c. minimum, and at inside corners of brick. Coordinate exact locations with the Architect prior to installation.

Keyed Notes

04-1	Manufactured Stone Veneer System.
04-2	Brick veneer field course. Brick Type#1.
04-3	Brick veneer soldier course. Brick Type #2.
04-4	Manufactured stone veneer capstone.
04-5	Brick veneer stacked course. Brick Type #2.
04-6	Brick veneer rowlock course. Brick Type #2.
04-15	Thin brick veneer field course. Brick Type #1. See F/A211.
07-18	Asphalt shingle roofing over underlayments. Install secondary underlayment over the entire roof.
07-23	Metal Drip Edge Flashing. See J/A502.
07-25	Prefinished Metal Fascia. See J/A502.
07-26	Prefinished Metal Rain Gutter. See Detail J/A502.
07-28	Prefinished metal ridge vent. See F/A122.
07-33	Not used.
07-40	Prefinished metal fascia return. See A & B/A503.

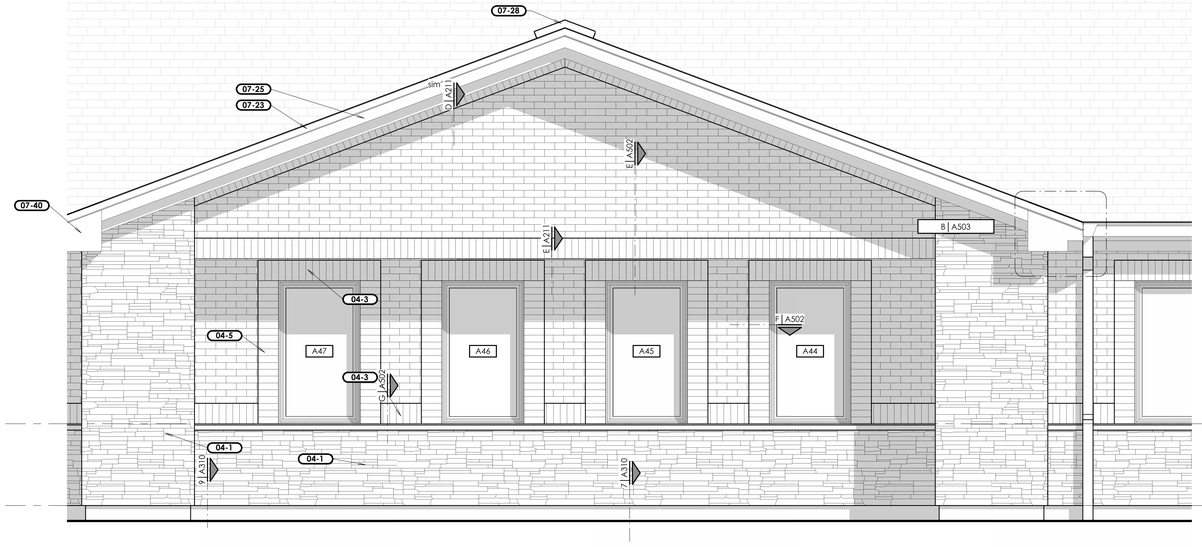

2 Enlarged Elevation

Scale: 1/2" = 1'-0"



3 Enlarged Elevation

Scale: 1/2" = 1'-0"

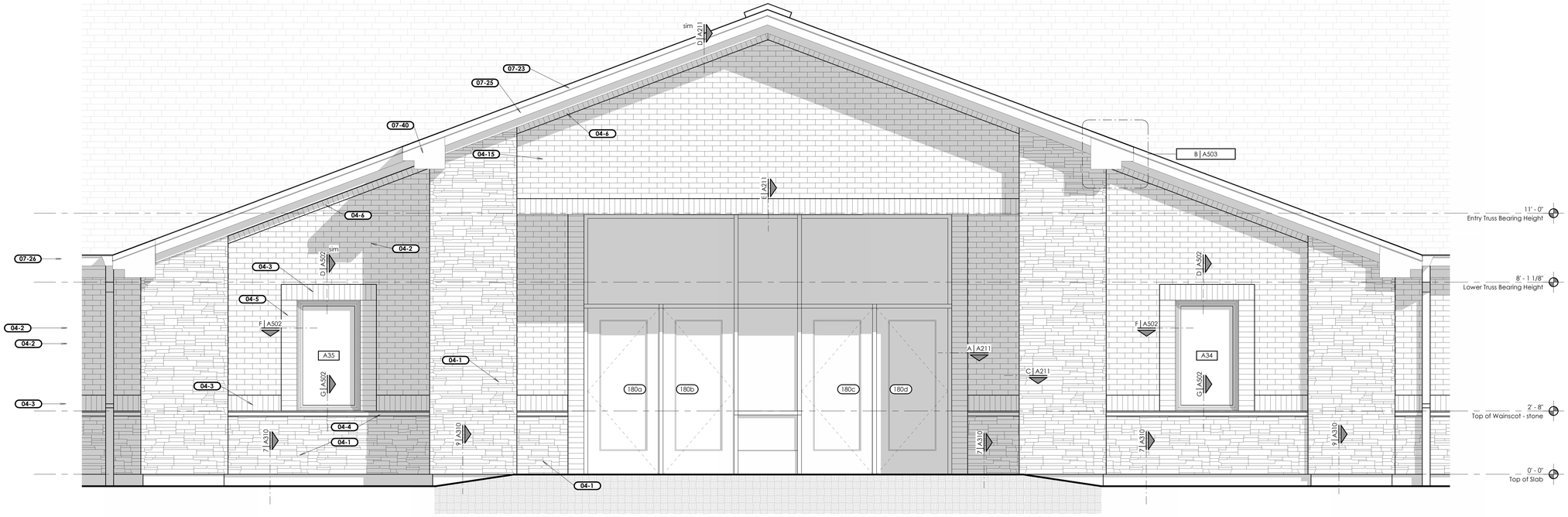

1 Enlarged Elevation

Scale: 1/2" = 1'-0"

bhd ARCHITECTS
www.bhdarchitects.com
Phone 801.571.0010
Fax 801.571.0303
Toll Free 888.571.0010
65 East Wadsworth Park Drive
Suite 205 Draper, Utah 84020

LICENSED ARCHITECT
Lafe Theodore Harris
15 Aug 2024
7738896-0301
STATE OF UTAH

THE CHURCH OF JESUS CHRIST OF LATTER-DAY SAINTS

Orem YSA 3rd 10 Ward Building
Orem UT YSA 3rd Stake

Approx. 1700 West 575 South
Vineyard, Utah 84059

Owner #: 390-1878
Plan Series: 2024 10 Ward SC
County Parcel: 37-226-0001
BHD #: 2244
Date: 15 Aug 2024

Drawing Issue and Revision Schedule		
#	Date	Description
1	15 Aug 2024	Bid Drawings

Enlarged Exterior Elevations

A204

Printed 8/19/2024 8:15:28 PM

Keyed Notes	
04-1	Manufactured Stone Veneer System.
04-2	Brick veneer field course. Brick Type#1.
04-4	Manufactured stone veneer capstone.
04-5	Brick veneer stacked course. Brick Type #2.
07-25	Prefinished Metal Fascia. See J/A502.
07-26	Prefinished Metal Rain Gutter. See Detail J/A502.
07-27	Prefinished Metal Downspout. Typical. See H/A502.

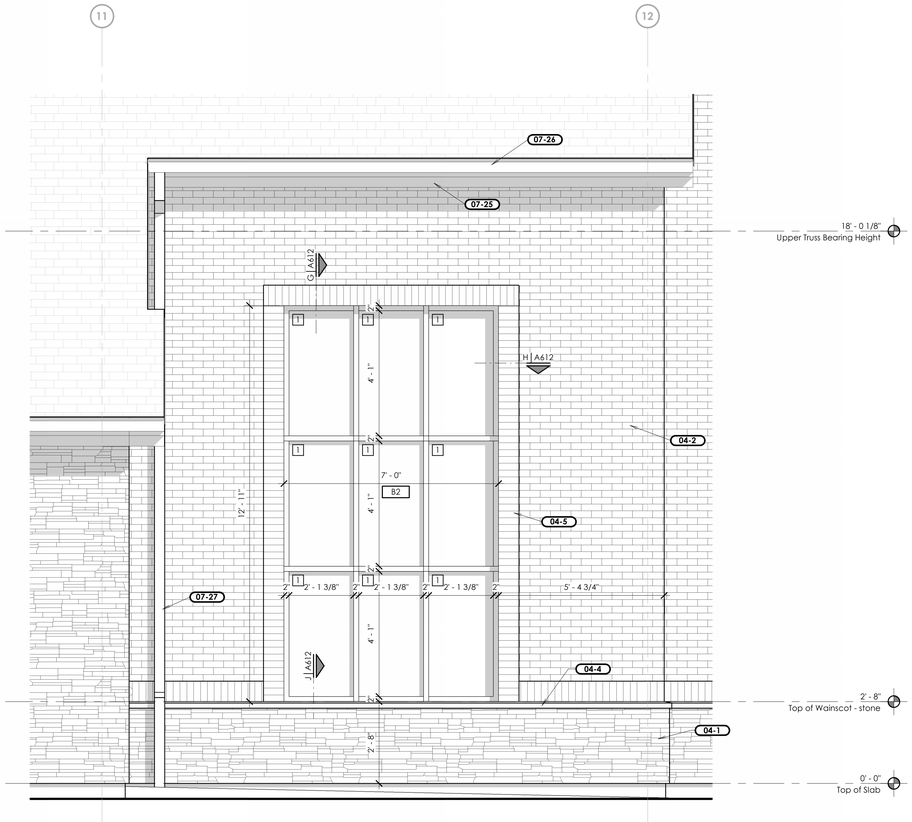

1 Enlarged Elevation and Window Type-B

Scale: 1/2" = 1'-0"

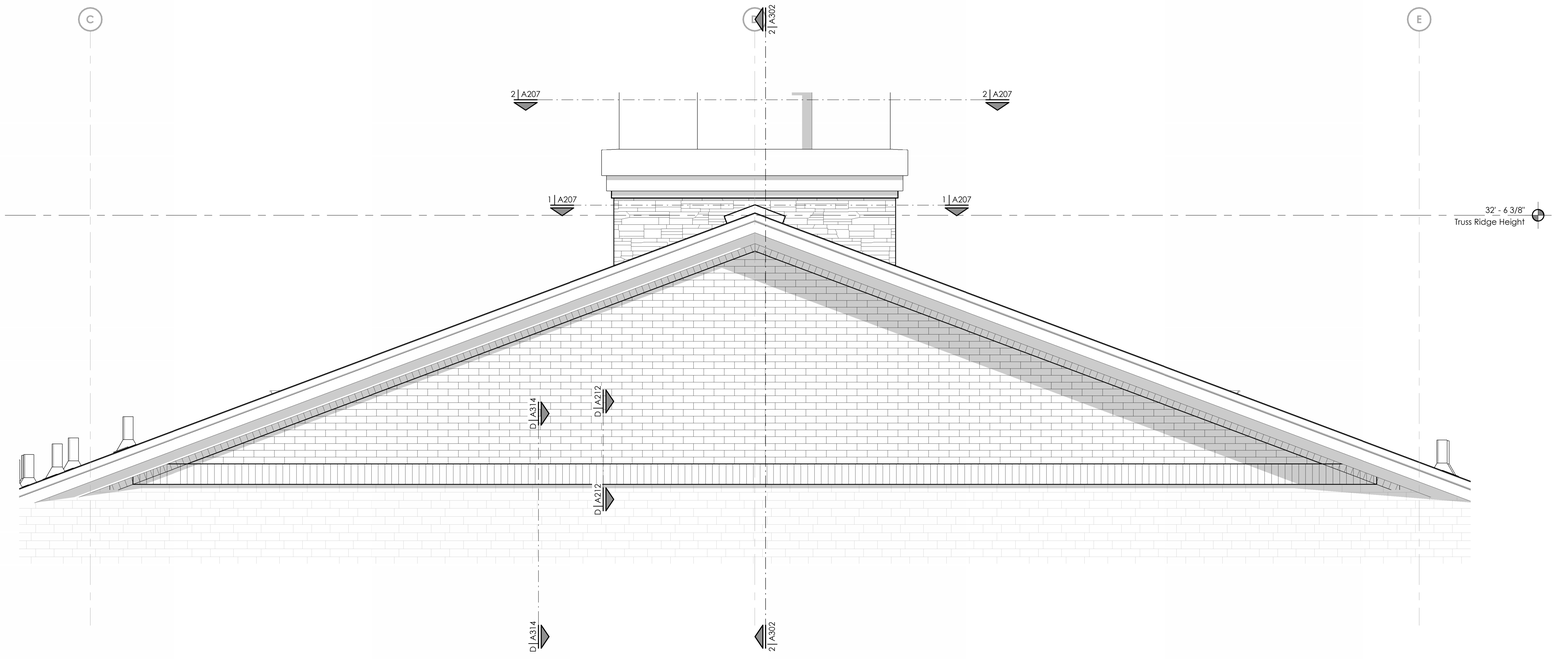

2 Enlargedd Elevation

Scale: 1/2" = 1'-0"

bhd ARCHITECTS
www.bhdarchitects.com
Phone 801.571.0010
Fax 801.571.0303
Toll Free 888.571.0010
65 East Wadsworth Park Drive
Suite 205 Draper, Utah 84020

LICENSED ARCHITECT
Lafe Theodore Harris
15 Aug 2024
7738896-0301
STATE OF UTAH

THE CHURCH OF JESUS CHRIST OF LATTER-DAY SAINTS

Orem YSA 3rd 10 Ward Building
Orem UT YSA 3rd Stake

Approx. 1700 West 575 South
Vineyard, Utah 84059

Date: 15 Aug 2024
BHD #: 2344
County Parcel: 39-228-0001
Plan Series: 2024 10 Ward SLC
Owner #: 390-1876

Drawing Issue and Revision Schedule

#	Date	Description
1	15 Aug 2024	Bid Drawings

Enlarged Exterior Elevations

A205

Printed 8/19/2024 8:18:31 PM

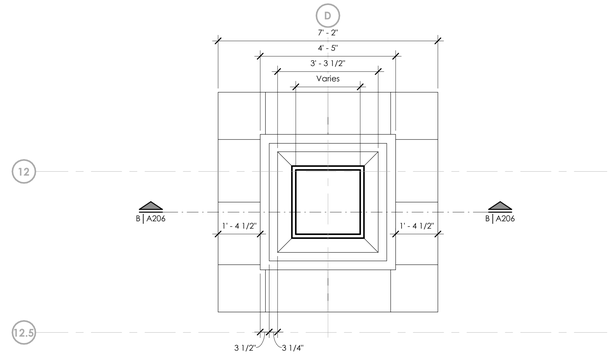

© Steeple Profile Through Spire

Scale: 1/2" = 1'-0"

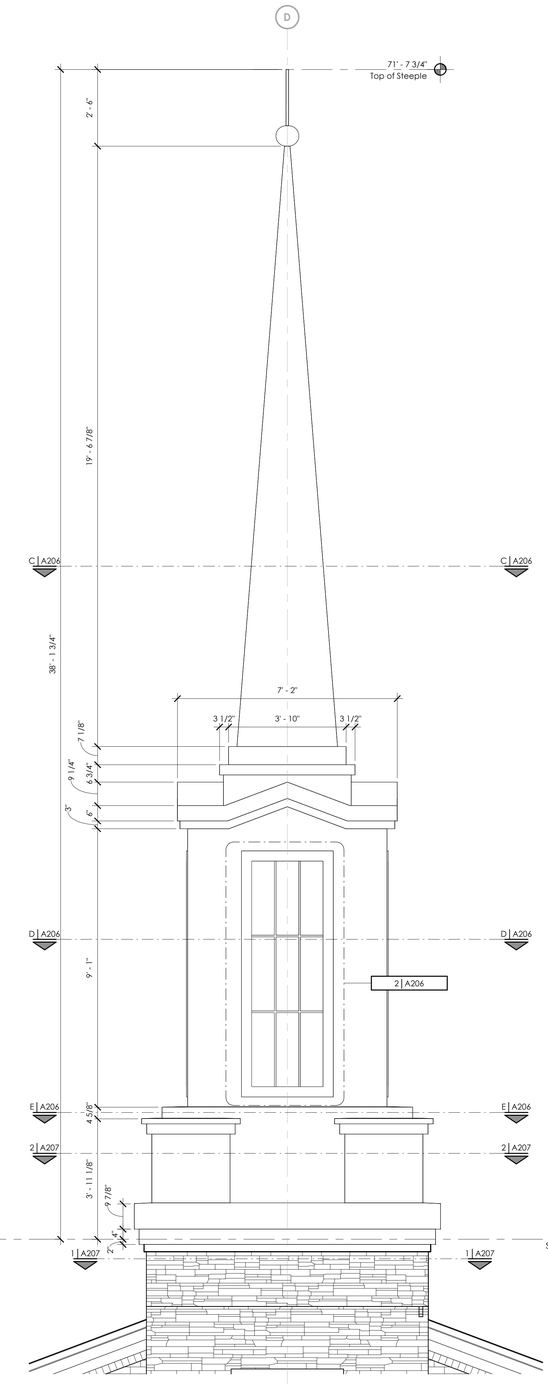

1 Steeple Elevation

Scale: 1/2" = 1'-0"

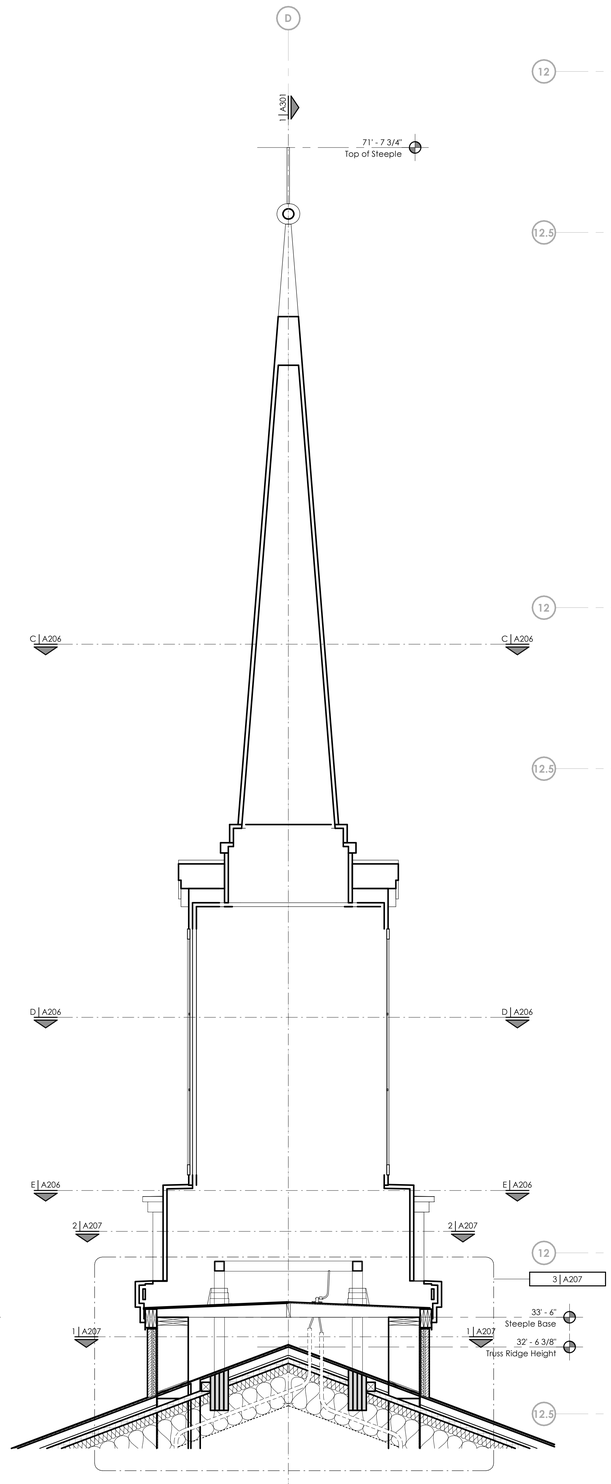

B Steeple Section

Scale: 1/2" = 1'-0"

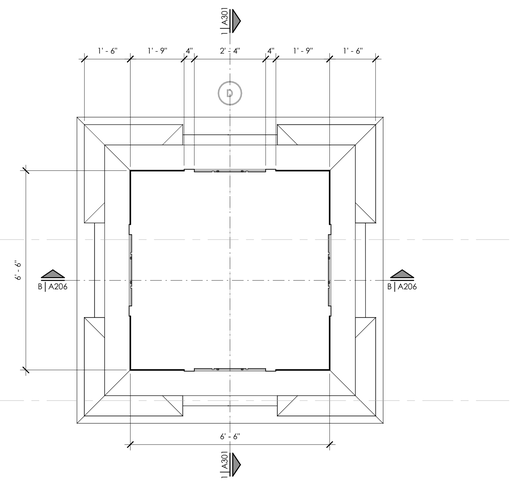

D Steeple Profile Through Feature

Scale: 1/2" = 1'-0"

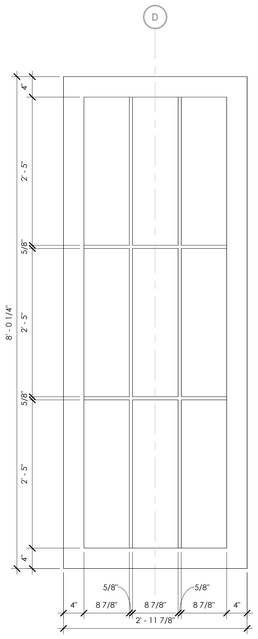

2 Steeple Feature Elevation

Scale: 1" = 1'-0"

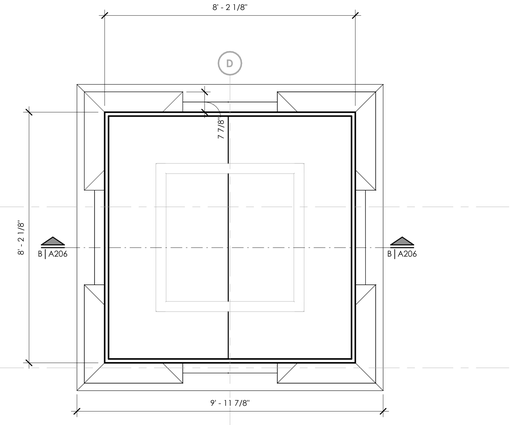

E Steeple Profile Through Base

Scale: 1/2" = 1'-0"

bhd ARCHITECTS
www.bhdarchitects.com
Phone 801.571.0010
Fax 801.571.0303
Toll Free 888.571.0010
65 East Wadsworth Park Drive
Suite 205 Draper, Utah 84020

LICENSED ARCHITECT
Lafe Theodore Harris
15 Aug 2024
7738896-0301
STATE OF UTAH

THE CHURCH OF JESUS CHRIST OF LATTER-DAY SAINTS

Orem YSA 3rd 10 Ward Building
Orem UT YSA 3rd Stake

Approx. 1700 West 575 South
Vineyard, Utah 84059

Date: 15 Aug 2024
BHD #: 2344
County Parcel: 39-228-0001
Plan Series: 2024 10 Ward SLC
Owner #: 390-1876

Drawing Issue and Revision Schedule

#	Date	Description
4	15 Aug 2024	Bid Drawings

Steeple Details

A206

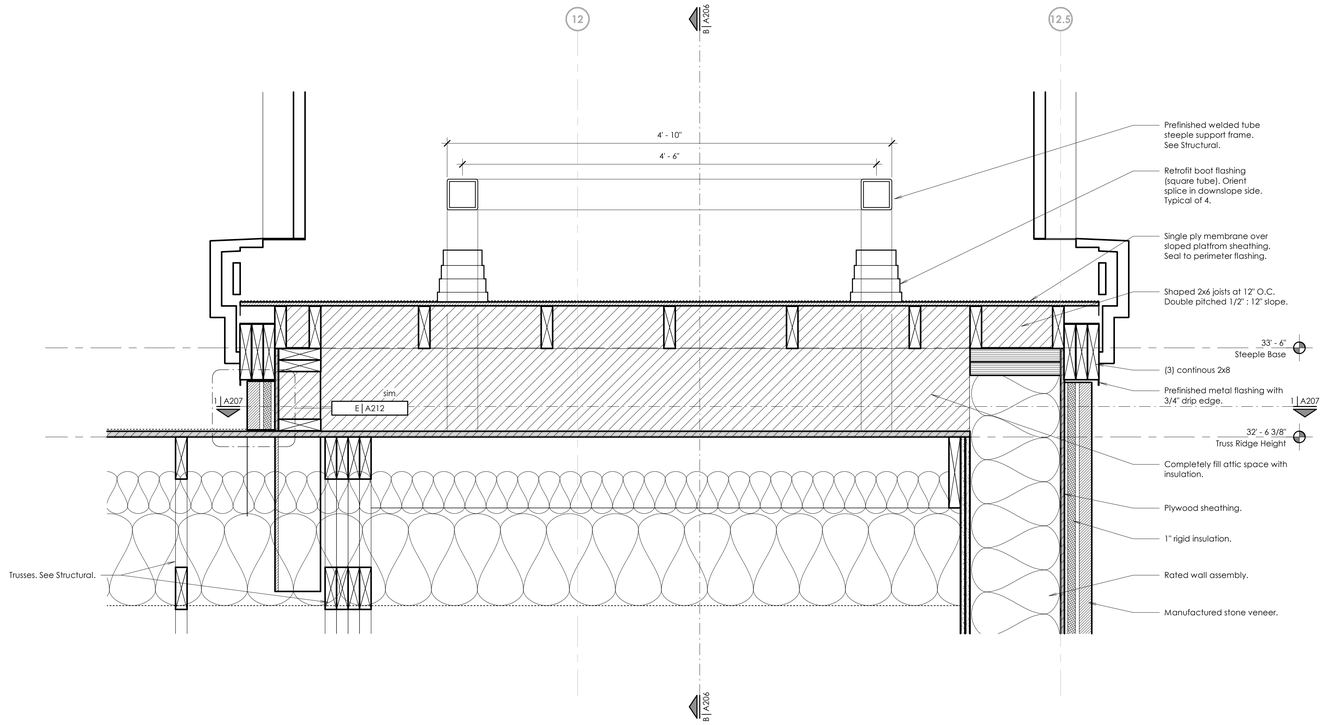

4 Steeple Support

Scale: 1 1/2" = 1'-0"

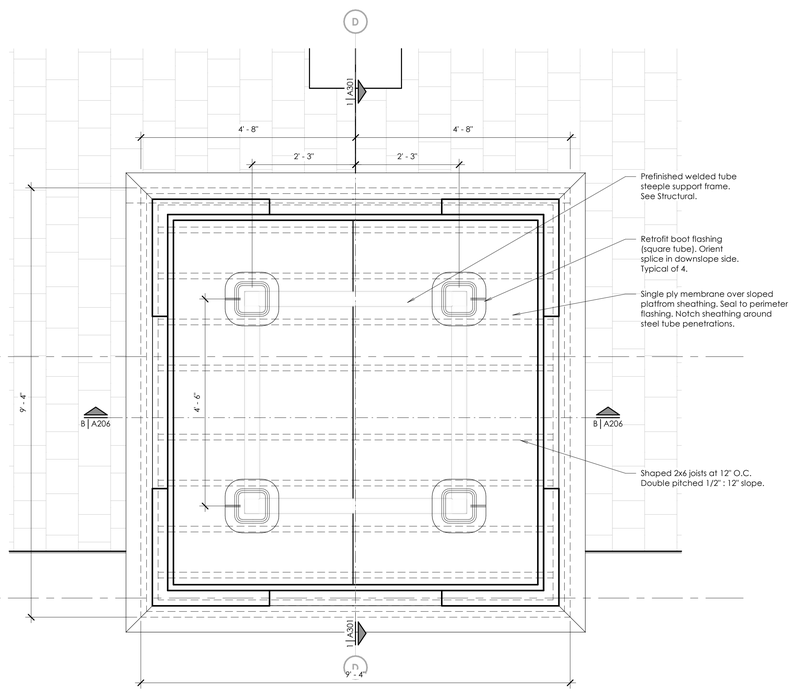

2 Steeple Profile Through Base

Scale: 3/4" = 1'-0"

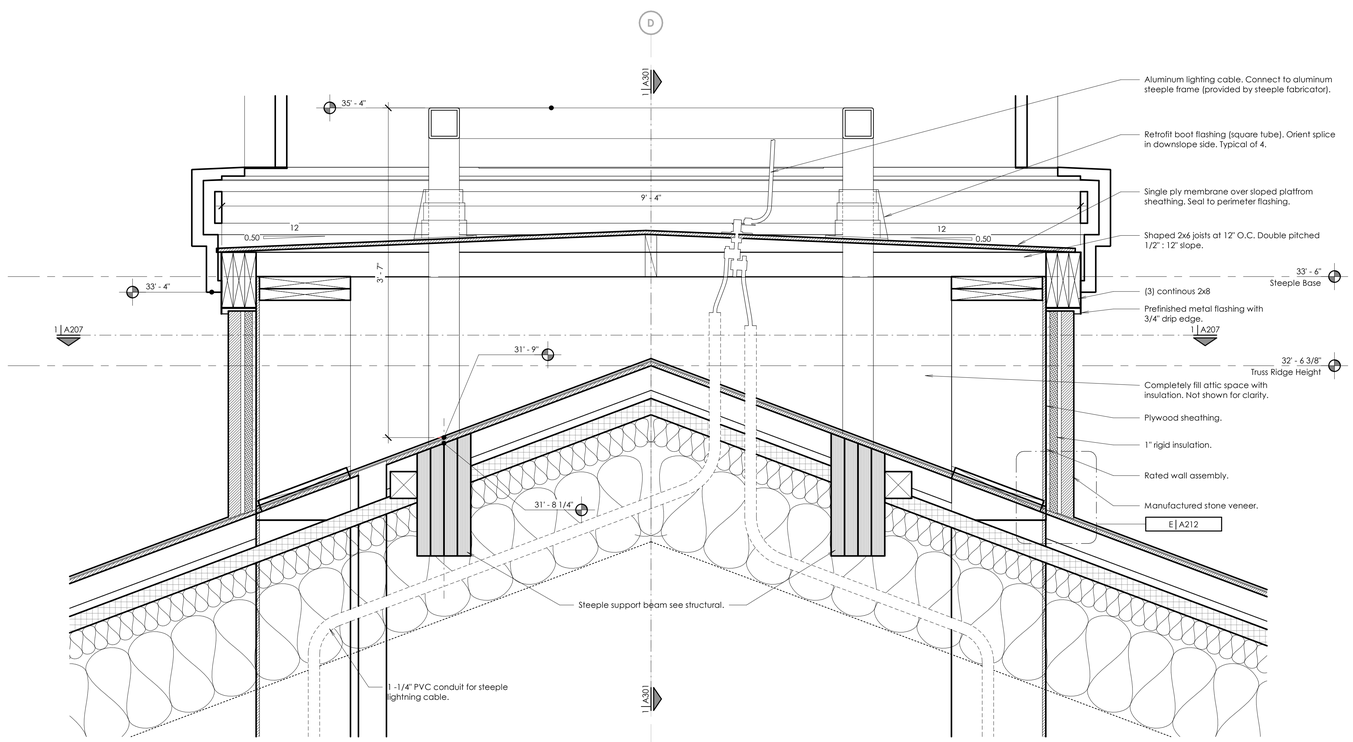

3 Steeple Support

Scale: 1 1/2" = 1'-0"

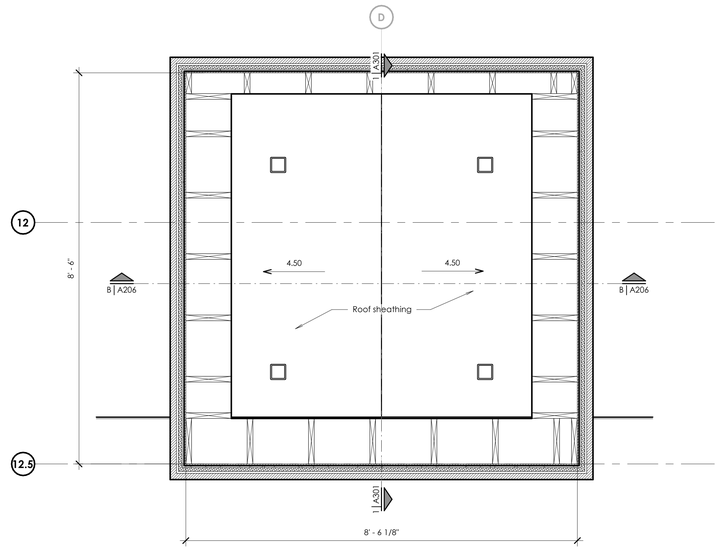

1 Steeple Support Frame Base

Scale: 3/4" = 1'-0"

bhd ARCHITECTS
www.bhdarchitects.com
Phone 801.571.0010
Fax 801.571.0303
Toll Free 888.571.0010
65 East Wadsworth Park Drive
Suite 205 Draper, Utah 84020

LICENSED ARCHITECT
Lafe Theodore Harris
15 Aug 2024
7855896-0301
STATE OF UTAH

THE CHURCH OF JESUS CHRIST OF LATTER-DAY SAINTS

Orem YSA 3rd 10 Ward Building
Orem UT YSA 3rd Stake

Approx. 1700 West 575 South
Vineyard, Utah 84059

Owner #: 590-18-8
Plan Series: 2024 10 Ward SC
County Parcel: 59:220:0001
BHD #: 2344
Date: 13 Aug 2024

Drawing Issue and Revision Schedule		
#	Date	Description
1	13 Aug 2024	Bid Drawings

Steeple Details

A207

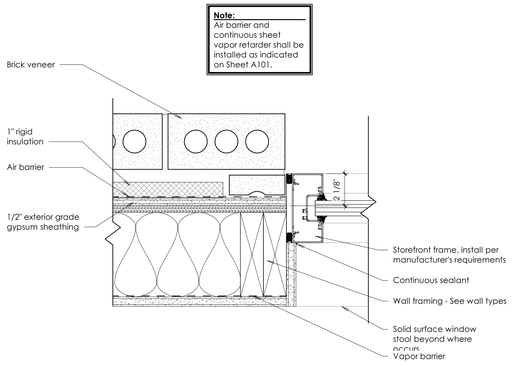

A Storefront Jamb Detail

Scale: 3" = 1'-0"

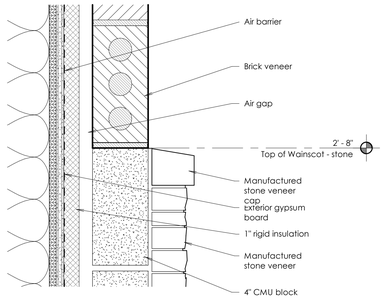

B Wainscot Cap

Scale: 3" = 1'-0"

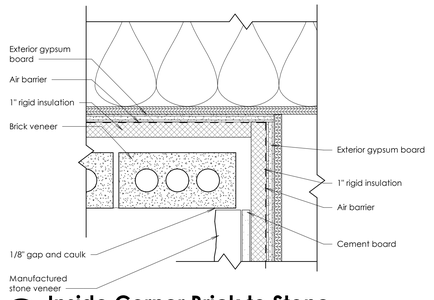

C Inside Corner Brick to Stone

Scale: 3" = 1'-0"

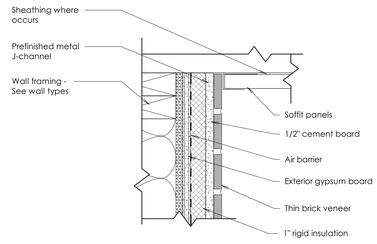

D Thin Brick at Soffit Inside

Scale: 3" = 1'-0"

E Thin Brick at Gable Base

Scale: 3" = 1'-0"

F Typical Thin Brick Detail

Scale: 3" = 1'-0"

bhd ARCHITECTS
www.bhdarchitects.com
Phone 801.571.0010
Fax 801.571.0303
Toll Free 888.571.0010
65 East Wadsworth Park Drive
Suite 205 Draper, Utah 84020

LICENSED ARCHITECT
Lafe Theodore Harris
15 Aug 2024
7815896-0301
STATE OF UTAH

THE CHURCH OF JESUS CHRIST OF LATTER-DAY SAINTS

Orem YSA 3rd 10 Ward Building
Orem UT YSA 3rd Stake

Approx. 1700 West 575 South
Vineyard, Utah 84059

Date: 13 Aug 2024
BHD #: 2344
County Parcel: 57-228-0001
Plan Series: 2024 10 Ward-SC
Owner #: 590-18-16

Drawing Issue and Revision Schedule

#	Date	Description
1	15 Aug 2024	Bid Drawings

Enlarged Exterior Details

A211

Printed 8/19/2024 8:34:20 PM

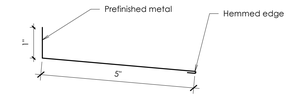

Flashing at Window and Feature Sills

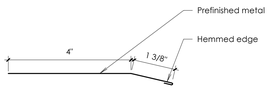

Flashing under Storefront Window

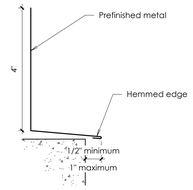

Flashing at Concrete Foundation

A Prefinished Metal Flashing

Scale: 6" = 1'-0"

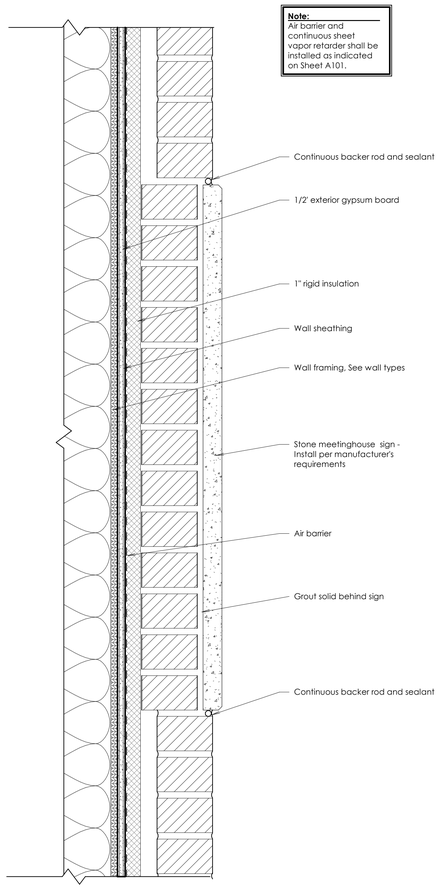

B Stone Meetinghouse Sign Detail

Scale: 3" = 1'-0"

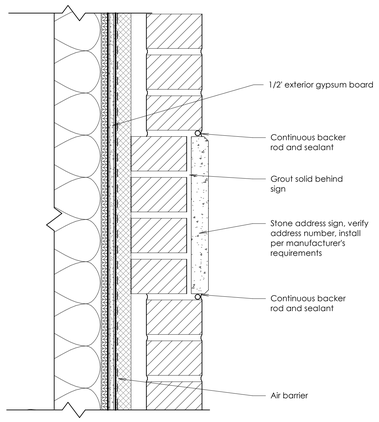

C Stone Address Sign Detail

Scale: 3" = 1'-0"

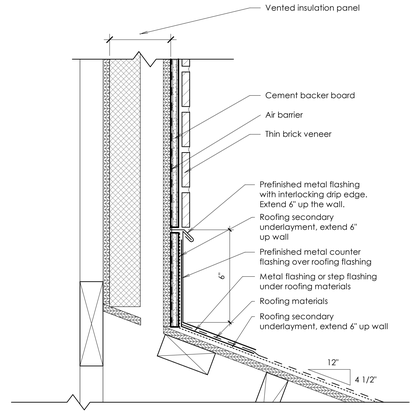

D Gable to Roof Detail

Scale: 3" = 1'-0"

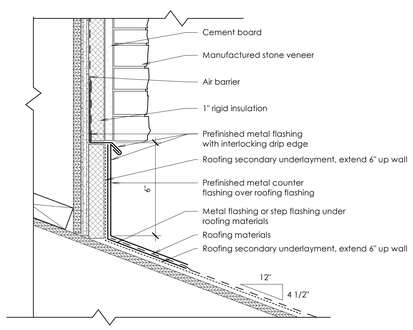

E Typical Stone to Roof Detail

Scale: 3" = 1'-0"

bhd ARCHITECTS
www.bhdarchitects.com
Phone 801.571.0010
Fax 801.571.0303
Toll Free 888.571.0010
65 East Wadsworth Park Drive
Suite 205 Draper, Utah 84020

LICENSED ARCHITECT
Lafe Theodore Harris
15 Aug 2024
7856896-0301
STATE OF UTAH

THE CHURCH OF JESUS CHRIST OF LATTER-DAY SAINTS

Orem YSA 3rd 10 Ward Building
Orem UT YSA 3rd Stake

Approx. 1700 West 575 South
Vineyard, Utah 84059

Date: 15 Aug 2024
BHD #: 2344
County Parcel: 37-228-0001
Plan Series: 2024 10 Ward S-C
Owner #: 590-1878

Drawing Issue and Revision Schedule

#	Date	Description
1	15 Aug 2024	Bid Drawings

Enlarged Exterior Details

A212

Printed 8/19/2024 8:35:14 PM

Keyed Notes

03-3	Reinforced concrete footing and foundation. See Structural Sheets.
04-1	Manufactured Stone Veneer System.
04-2	Brick veneer field course. Brick Type#1.
04-3	Brick veneer soldier course. Brick Type #2.
04-4	Manufactured stone veneer capstone.
04-5	Brick veneer stacked course. Brick Type #2.
04-6	Brick veneer rowlock course. Brick Type #2.
06-3	Attic access catwalk. See A/A102. Center catwalk in truss at the high point of the truss.
06-13	Recessed Hymn Book Shelf. Refer to R/A702.
06-15	Hardwood lectern. See Sheet A422.
06-18	Slanted wall framing. See A/A504.
06-47	1" x 2 1/2" painted wood trim.
06-59	Trussed rafters. See Structural Sheets.
07-13	Corrugated plastic baffle with 4" ventilation space above.
07-25	Prefinished Metal Fascia. See J/A502.
07-26	Prefinished Metal Rain Gutter. See Detail J/A502.
07-28	Prefinished metal ridge vent. See F/A122.
07-39	Fill entire cavity with insulation. At roof locations, leave 4" ventilation space to deck. Install baffles as necessary to maintain ventilation space.
07-48	Install baffles or other method to support insulation above the framed pillars.
09-18	4'-0" x 4'-0" sound-absorptive acoustical panels. See H/A702.
09-36	Painted wood trim at the ceiling around the Chapel. See N/A704.
10-25	Prefinished aluminum steeple. See A206 and A207.
11-4	Projection Screen, See D/A505.
11-13	Basketball standard above.

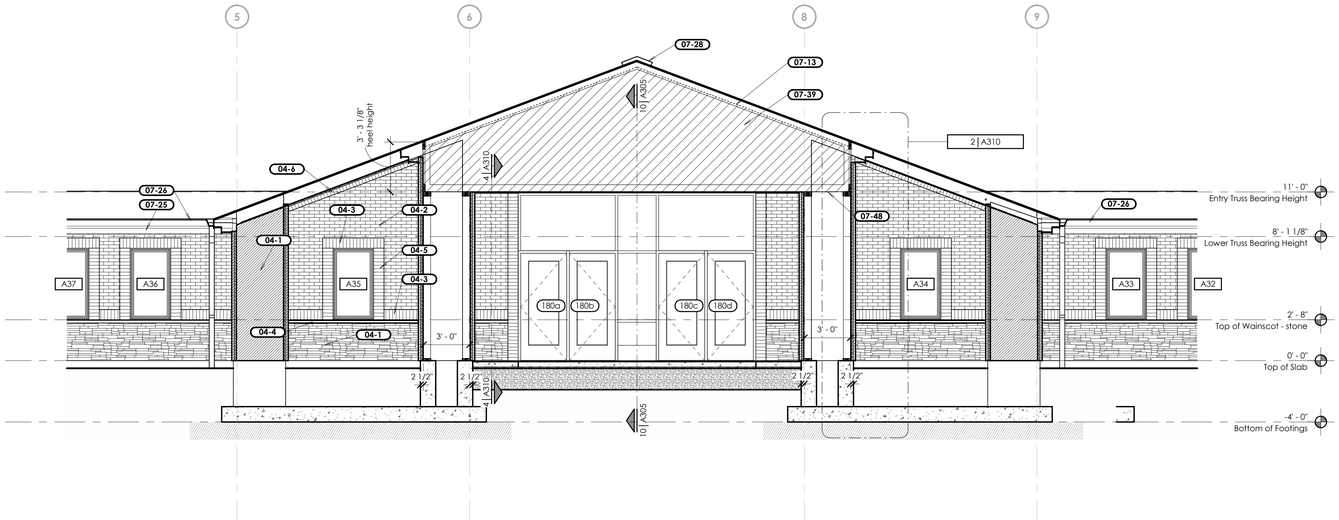

3 Building Section

Scale: 1/4" = 1'-0"

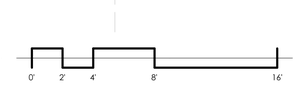

1 Building Section

Scale: 1/4" = 1'-0"

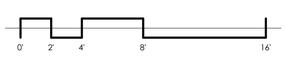

bhd ARCHITECTS
www.bhdarchitects.com
Phone 801.571.0010
Fax 801.571.0303
Toll Free 888.571.0010
65 East Wadsworth Park Drive
Suite 205 Draper, Utah 84020

LICENSED ARCHITECT
Lafe Theodore Harris
15 Aug 2024
6758878-0301
STATE OF UTAH

THE CHURCH OF JESUS CHRIST OF LATTER-DAY SAINTS

Orem YSA 3rd 10 Ward Building
Orem UT YSA 3rd Stake

Approx. 1700 West 575 South
Vineyard, Utah 84059

Owner #: 5790-1876
Plan Series: 2024-10-Wards-SC
County Parcel: 37-228-0001
BHD #: 2344
Date: 15 Aug 2024

Drawing Issue and Revision Schedule		
#	Date	Description
1	15 Aug 2024	Bid Drawings

Building Sections

A301

Printed: 8/19/2024 10:13:04 PM

Keyed Notes

00-5	Break in the section - not a step in the roof. See A101.
01-5	Artwork location. Do not install any equipment or devices in this location.
06-3	Attic access catwalk. See A/A102. Center catwalk in truss at the high point of the truss.
06-7	Floor Sheathing. See Structural Drawings.
06-14	Hymn Book Shelf. Refer to Q/A702.
06-21	Hardwood chair rail. See B/A705. At windows, see A/A705.
07-4	3" rigid insulation at the foundation wall. Extend insulation to the top of the floor slab. Install 2" x 2" chamfer at the top of the insulation.
07-6	Fiberglass batt roof insulation. See B/A502.
07-13	Corrugated plastic baffle with 4" ventilation space above.
07-18	Asphalt shingle roofing over underlayments. Install secondary underlayment over the entire roof.
07-25	Prefinished Metal Fascia. See J/A502.
07-26	Prefinished Metal Rain Gutter. See Detail J/A502.
07-27	Prefinished Metal Downspout. Typical. See H/A502.
07-28	Prefinished metal ridge vent. See F/A122.
07-45	Fill isolated area behind stepped ceiling with insulation.
09-1	Suspended ceiling system. See Reflected Ceiling Plan.
09-3	Painted and textured 5/8" Type X gypsum board.
09-14	Carpet Base. See Finish Schedule/Specifications.
09-16	Sisal Wall Covering.
09-30	Wall framing with safety railing. Typical at all wall framing adjacent to lay-in ceilings or other ceilings with no floor framing or sheathing. See Structural Sheets and C/A314.
09-31	Interior 5/8" Type X gypsum board over vapor retarder membrane. Typical at all side and rear trusses.
09-36	Painted wood trim at the ceiling around the Chapel. See N/A704.
10-6	Room Sign Furnished by Owner, Installed by Contractor, Refer to Signage Plans.
22-15	Vent through roof, flue, or other roof penetration. Typical. See Roof Details and Mechanical and Plumbing Sheets. Paint all roof penetrations.
23-4	Prefinished metal penthouse. See E/A122 and Mechanical Drawings.
23-9	Mechanical equipment. Typical. See Mechanical Sheets.
31-1	Compacted backfill.

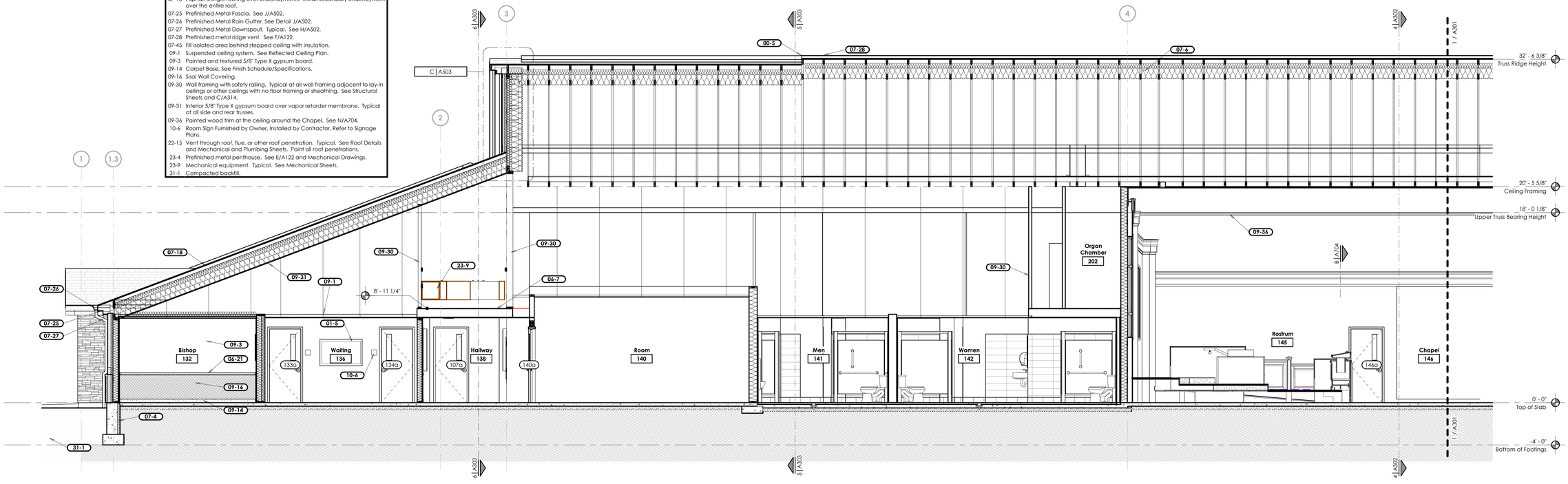

2 Building Section

Scale: 1/4" = 1'-0"

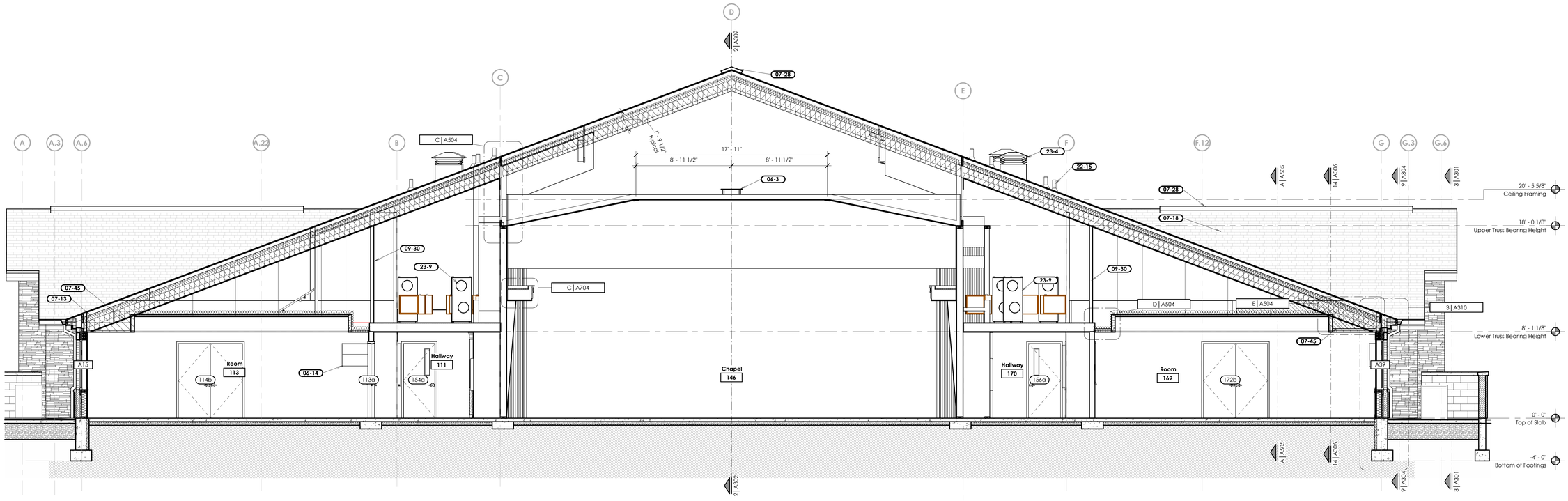

4 Building Section

Scale: 1/4" = 1'-0"

bhd ARCHITECTS
www.bhdarchitects.com
Phone 801.571.0010
Fax 801.571.0303
Toll Free 888.571.0010
65 East Wadsworth Park Drive
Suite 205 Draper, Utah 84020

LICENSED ARCHITECT
Lafe Theodore Harris
15 Aug 2024
6758878-0301
STATE OF UTAH

THE CHURCH OF JESUS CHRIST OF LATTER-DAY SAINTS

Orem YSA 3rd 10 Ward Building
Orem UT YSA 3rd Stake

Approx. 1700 West 575 South
Vineyard, Utah 84059

Plan Series: 2024 10 Wards SLC
Owner #: 390-1876
County Parcel: 37-228-0001
BHD #: 2344
Date: 15 Aug 2024

Drawing Issue and Revision Schedule

#	Type	Date	Description
1	ISSUE	15-Aug-2024	Bid Drawings

Building Sections

A302

Plotted: 8/19/2024 10:27:00 PM

Keyed Notes

03-3	Reinforced concrete footing and foundation. See Structural Sheets.
04-15	Thin brick veneer field course. Brick Type #1. See F/A211.
06-14	Hymn Book Shelf, Refer to Q/A702.
06-21	Hardwood chair rail. See B/A705. At windows, see A/A705.
06-37	Truss blocking. Top chord shall have ventilation opening. See Structural Sheets.
06-63	Overbuild framing. See Structural Sheets.
07-4	3" rigid insulation at the foundation wall. Extend insulation to the top of the floor slab. Install 2" x 2" chamfer at the top of the insulation.
07-15	Vapor Retarder Membrane. Seal Air Tight. See B/A502.
07-18	Asphalt shingle roofing over underlayments. Install secondary underlayment over the entire roof.
07-25	Prefinished Metal Fascia. See J/A502.
07-27	Prefinished Metal Downspout. Typical. See H/A502.
07-28	Prefinished metal ridge vent. See F/A122.
07-39	Fill entire cavity with insulation. At roof locations, leave 4" ventilation space to deck. Install baffles as necessary to maintain ventilation space.
07-45	Fill isolated area behind stepped ceiling with insulation.
09-1	Suspended ceiling system. See Reflected Ceiling Plan.
09-16	Sisal Wall Covering.
09-30	Wall framing with safety railing. Typical at all wall framing adjacent to lay-in ceilings or other ceilings with no floor framing or sheathing. See Structural Sheets and C/A314.
10-1	Glass Board, Refer to Furnishings Plan on Sheet F101 and Visual Display Details on Sheet F103.
10-3	Fixed Tackboard, Refer to Furnishings Plan on Sheet F101 and Visual Display Details on Sheet F103.
10-4	Display Case.
22-15	Vent through roof, flue, or other roof penetration. Typical. See Roof Details and Mechanical and Plumbing Sheets. Paint all roof penetrations.

Keyed Notes

23-4	Prefinished metal penthouse. See E/A122 and Mechanical Drawings.
23-9	Mechanical equipment. Typical. See Mechanical Sheets.
27-6	Flat Panel Television Monitor. Refer to Audio/Visual Drawings.

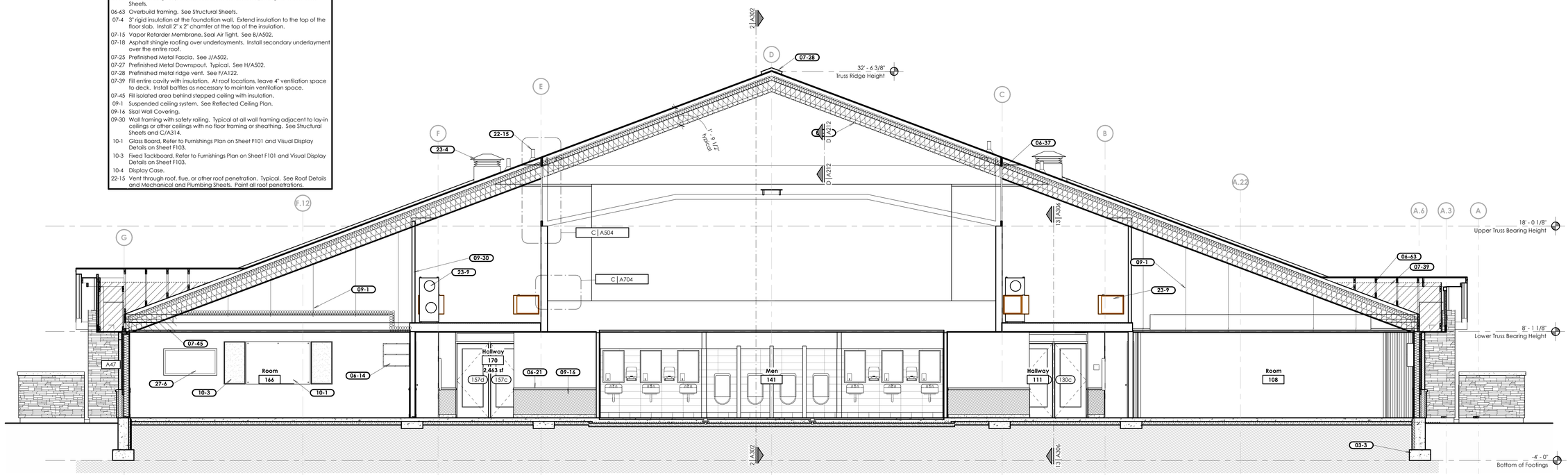

5 Building Section

Scale: 1/4" = 1'-0"

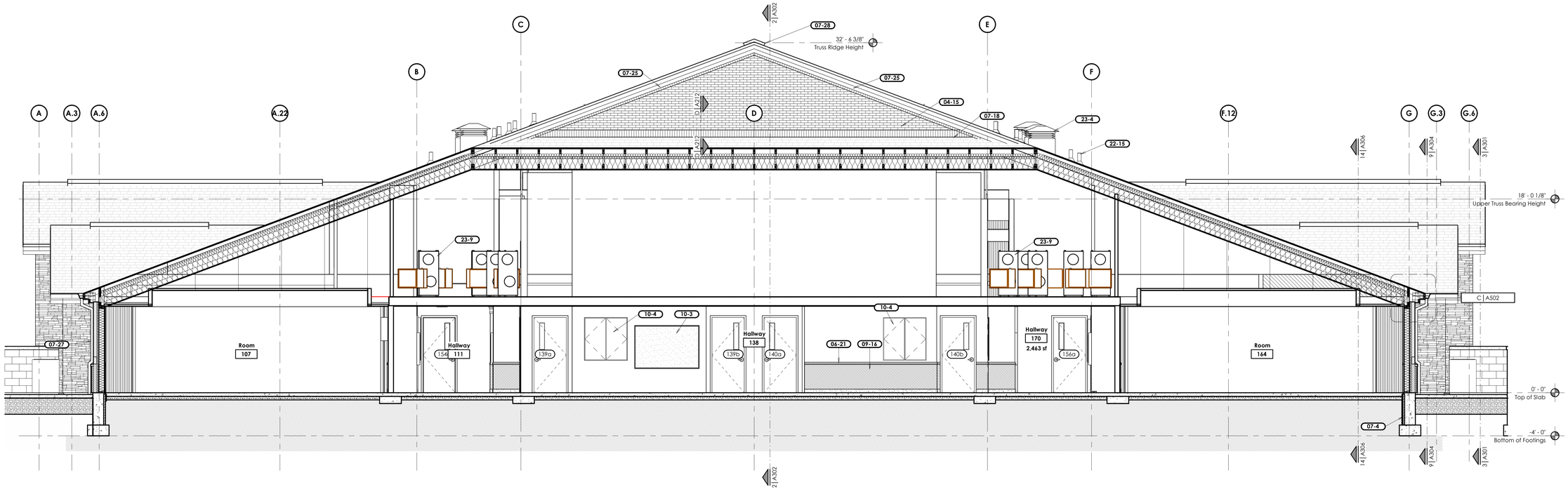

6 Building Section

Scale: 1/4" = 1'-0"

bhd ARCHITECTS
www.bhdarchitects.com
Phone 801.571.0010
Fax 801.571.0303
Toll Free 888.571.0010
65 East Wadsworth Park Drive
Suite 205 Draper, Utah 84020

LICENSED ARCHITECT
Lafe Theodore Harris
15 Aug 2024
7856896-0301
STATE OF UTAH

THE CHURCH OF JESUS CHRIST OF LATTER-DAY SAINTS

Orem YSA 3rd 10 Ward Building
Orem UT YSA 3rd Stake

Approx. 1700 West 575 South
Vineyard, Utah 84059

Owner #: 590-1876
Plan Series: 2024 10 Ward S-C
County Parcel: 37-228-0001
BHD #: 2344
Date: 15 Aug 2024

Drawing Issue and Revision Schedule

#	Date	Description
1	15 Aug 2024	Bid Drawings

Building Sections

A303

Printed: 8/19/2024 10:25:59 PM

Keyed Notes

01-5	Artwork location. Do not install any equipment or devices in this location.
04-1	Manufactured Stone Veneer System.
04-2	Brick veneer field course. Brick Type#1.
04-3	Brick veneer soldier course. Brick Type #2.
04-4	Manufactured stone veneer capstone.
06-7	Floor Sheathing, See Structural Drawings.
06-11	Wall-Mounted Open Adjustable Shelving, See Q/A701.
06-21	Hardwood chair rail. See B/A705. At windows, see A/A705.
06-57	Floor framing. See Structural Sheets.
06-58	Ceiling framing. See Structural Sheets.
06-68	3/4" x 5" hardwood hook strip with hooks at 6" o.c. Extend ends to 2" from end walls. See A/A702.
07-4	3" rigid insulation at the foundation wall. Extend insulation to the top of the floor slab. Install 2" x 2" chamfer at the top of the insulation.
07-13	Corrugated plastic baffle with 4" ventilation space above.
07-15	Vapor Retarder Membrane, Seal Air Tight. See B/A502.
07-24	Metal Soffit Panels.
07-25	Prefinished Metal Fascia. See J/A502.
07-27	Prefinished Metal Downspout. Typical. See H/A502.
07-28	Prefinished metal ridge vent. See F/A122.
07-39	Fill entire cavity with insulation. At roof locations, leave 4" ventilation space to deck. Install baffles as necessary to maintain ventilation space.
08-8	Vinyl Framed Window, Refer to Window Elevations A601.
09-1	Suspended ceiling system. See Reflected Ceiling Plan.
09-2	Interior 5/8" Type X Gypsum Board.
09-3	Painted and textured 5/8" Type X gypsum board.
09-16	Sisal Wall Covering.
10-22	Semi-recessed fire extinguisher cabinet. See F/A702 and Code Plans.
10-24	Wall Mounted Coat Rack, Refer to Detail A/A702.
31-3	Engineered structural fill down to bedrock. See Site Sheets.

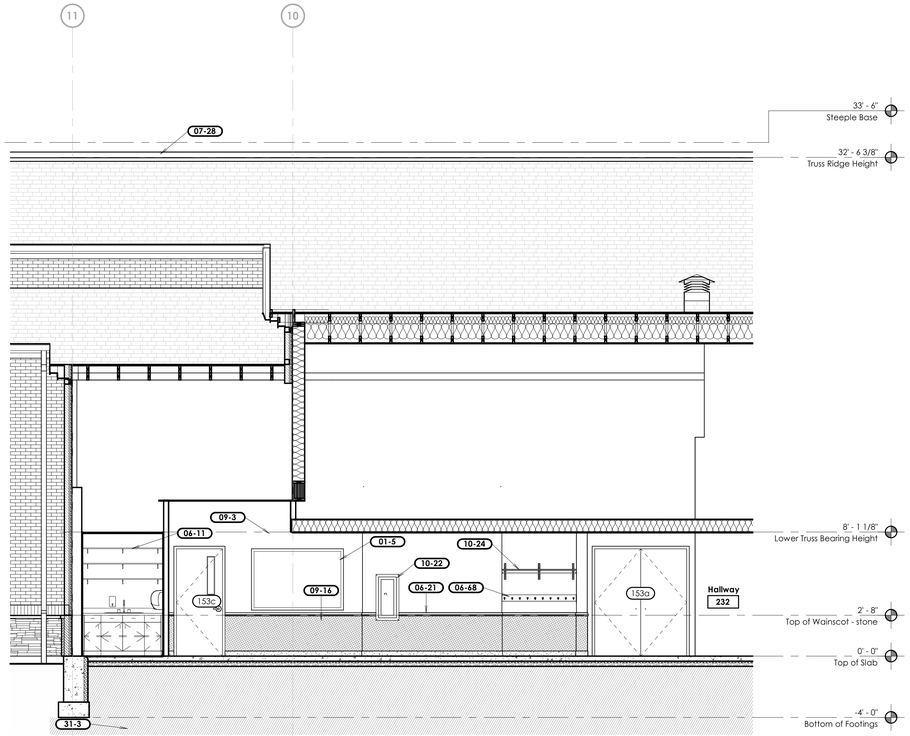

7 Section

Scale: 1/4" = 1'-0"

ALL BARE CONDUCTORS IN CONTACT WITH FLAMMABLE MATERIALS SHALL BE INSTALLED IN CONDUIT.

REFER TO THE SPECIFICATIONS FOR ADDITONAL INFORMATION AND REQUIREMENTS.

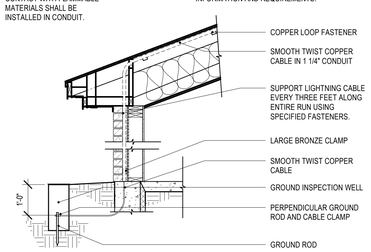

A CABLE INSTALLATION DETAIL

Scale: 1/2" = 1'-0"

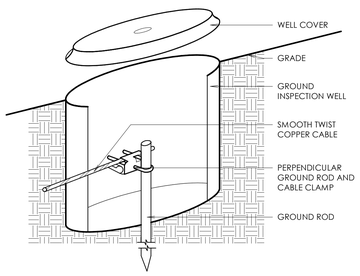

C GROUND INSPECTION WELL

Scale: 1/2" = 1'-0"

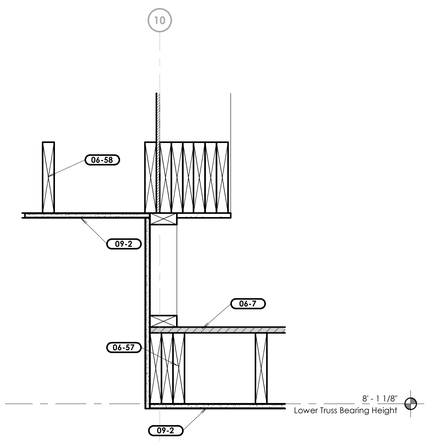

B Detail

Scale: 1 1/2" = 1'-0"

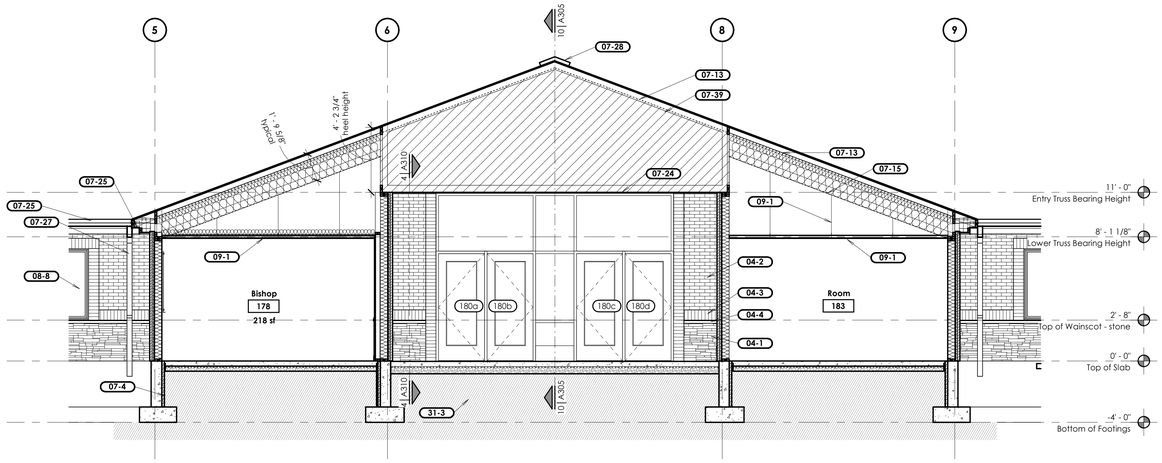

9 Section

Scale: 1/4" = 1'-0"

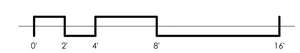

bhd ARCHITECTS
www.bhdarchitects.com
Phone 801.571.0010
Fax 801.571.0303
Toll Free 888.571.0010
65 East Wadsworth Park Drive
Suite 205 Draper, Utah 84020

LICENSED ARCHITECT
Lafe Theodore Harris
15 Aug 2024
7855896-0301
STATE OF UTAH

THE CHURCH OF JESUS CHRIST OF LATTER-DAY SAINTS

Orem YSA 3rd 10 Ward Building
Orem UT YSA 3rd Stake

Approx. 1750 West 575 South
Vineyard, Utah 84059

Owner #: 590-1878
Plan Series: 2024 10 Ward S-C
County Parcel: 37-228-0001
BHD #: 2344
Date: 15 Aug 2024

Drawing Issue and Revision Schedule		
#	Date	Description
1	15 Aug 2024	Bid Drawings

Building Sections

A304

Printed: 8/19/2024, 10:46:56 PM

Keyed Notes

01-5	Artwork location. Do not install any equipment or devices in this location.
04-1	Manufactured Stone Veneer System.
06-21	Hardwood chair rail. See B/A705. At windows, see A/A705.
06-59	Trussed rafters. See Structural Sheets.
06-63	Overbuild framing. See Structural Sheets.
07-6	Fiberglass batt roof insulation. See B/A502.
07-13	Corrugated plastic baffle with 4" ventilation space above.
07-25	Prefinished Metal Fascia. See J/A502.
07-26	Prefinished Metal Rain Gutter. See Detail J/A502.
07-27	Prefinished Metal Downspout. Typical. See H/A502.
07-28	Prefinished metal ridge vent. See F/A122.
07-39	Fill entire cavity with insulation. At roof locations, leave 4" ventilation space to deck. Install baffles as necessary to maintain ventilation space.
07-45	Fill isolated area behind stepped ceiling with insulation.
08-10	Door operator location. See Electrical Sheets and Door Schedule A610.
09-1	Suspended ceiling system. See Reflected Ceiling Plan.

Keyed Notes

09-3	Painted and textured 5/8" Type X gypsum board.
09-14	Carpet Base, See Finish Schedule/Specifications.
09-16	Sisal Wall Covering.
09-30	Wall framing with safety railing. Typical at all wall framing adjacent to lay-in ceilings or other ceilings with no floor framing or sheathing. See Structural Sheets and C/A314.
10-6	Room Sign Furnished by Owner, Installed by Contractor, Refer to Signage Plans.
10-25	Prefinished aluminum steeple. See A206 and A207.
22-15	Vent through roof, flue, or other roof penetration. Typical. See Roof Details and Mechanical and Plumbing Sheets. Paint all roof penetrations.
23-4	Prefinished metal penthouse. See E/A122 and Mechanical Drawings.
23-9	Mechanical equipment. Typical. See Mechanical Sheets.

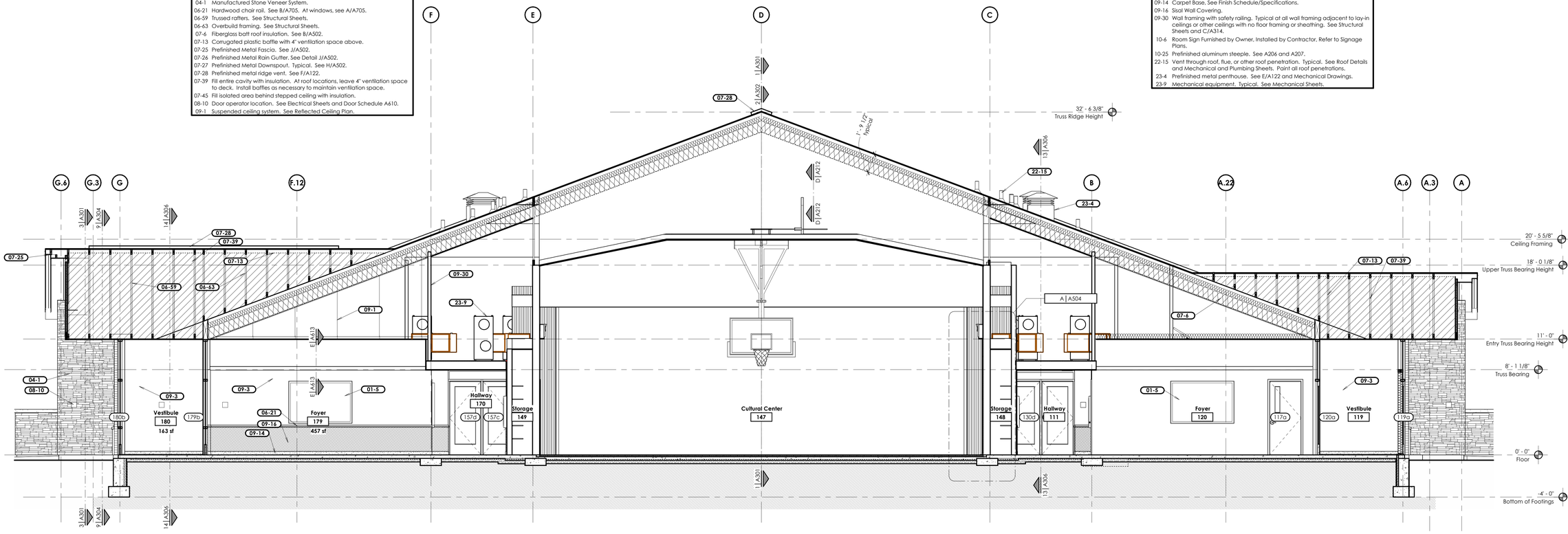

10 Building Section

Scale: 1/4" = 1'-0"

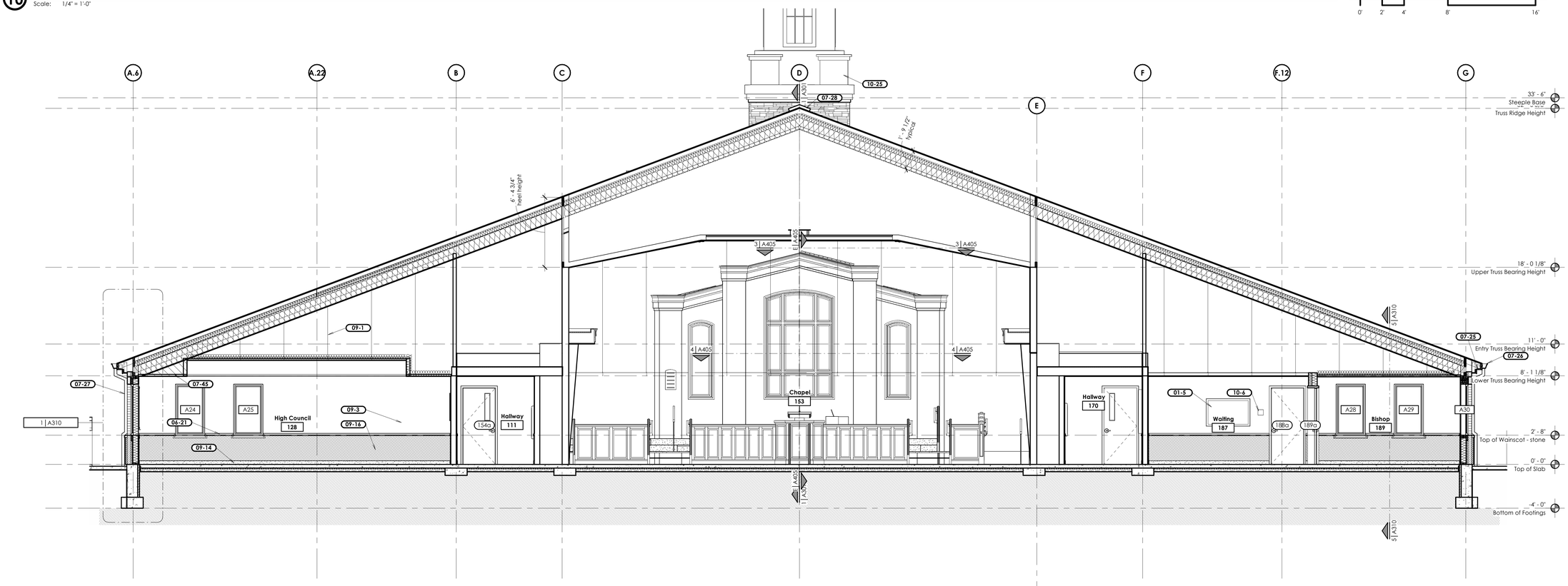

11 Building Section

Scale: 1/4" = 1'-0"

bhd ARCHITECTS
www.bhdarchitects.com
Phone 801.571.0010
Fax 801.571.0303
Toll Free 888.571.0010
65 East Wadsworth Park Drive
Suite 205 Draper, Utah 84020

LICENSED ARCHITECT
Lafe Theodore Harris
15 Aug 2024
7738896-0301
STATE OF UTAH

THE CHURCH OF JESUS CHRIST OF LATTER-DAY SAINTS

Orem YSA 3rd 10 Ward Building
Orem UT YSA 3rd Stake

Approx 1700 West 575 South
Vineyard, Utah 84059

Owner #: 590-1876
Plan Series: 2024 10 Ward SC
County Parcel: 37-2283-0001
BHD #: 2344
Date: 15 Aug 2024

Drawing Issue and Revision Schedule		
#	Date	Description
1	15 Aug 2024	Bid Drawings

Building Sections

A305

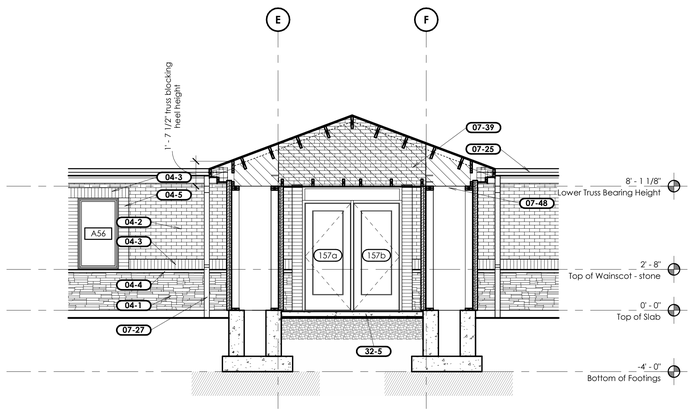

12 Section

Scale: 1/4" = 1'-0"

0' 2' 4' 8' 16'

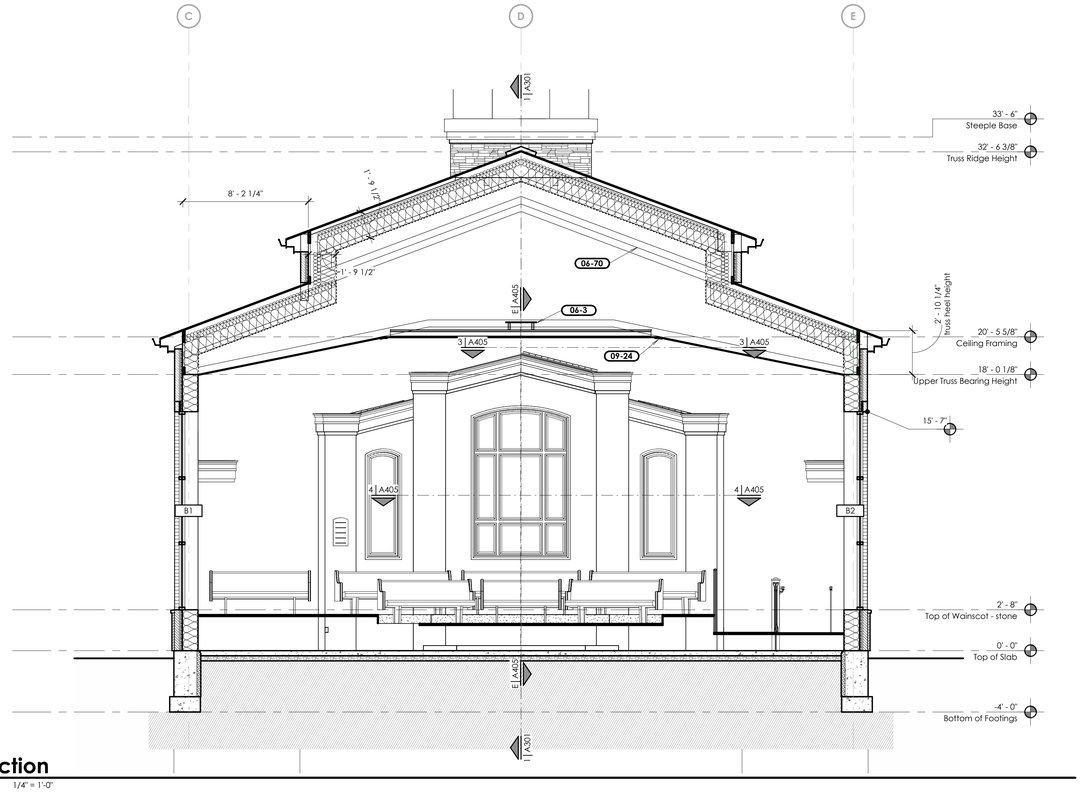

15 Section

Scale: 1/4" = 1'-0"

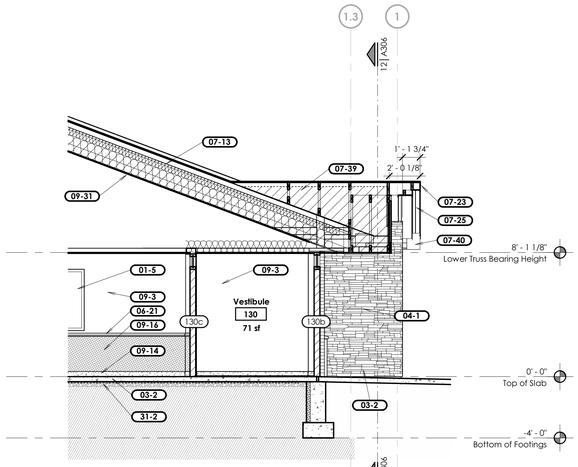

13 Section

Scale: 1/4" = 1'-0"

0' 2' 4' 8' 16'

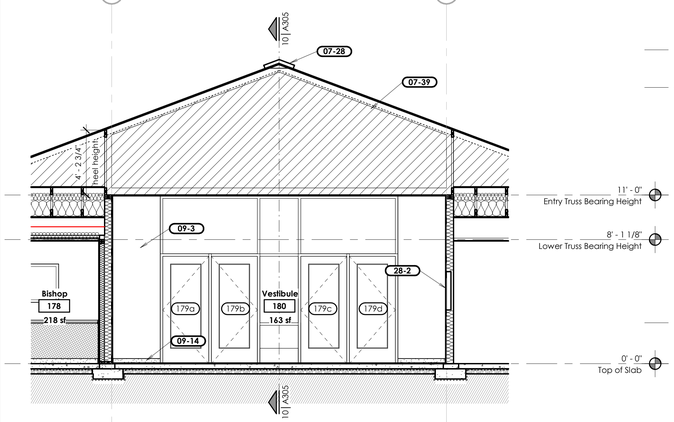

14 Section

Scale: 1/4" = 1'-0"

0' 2' 4' 8' 16'

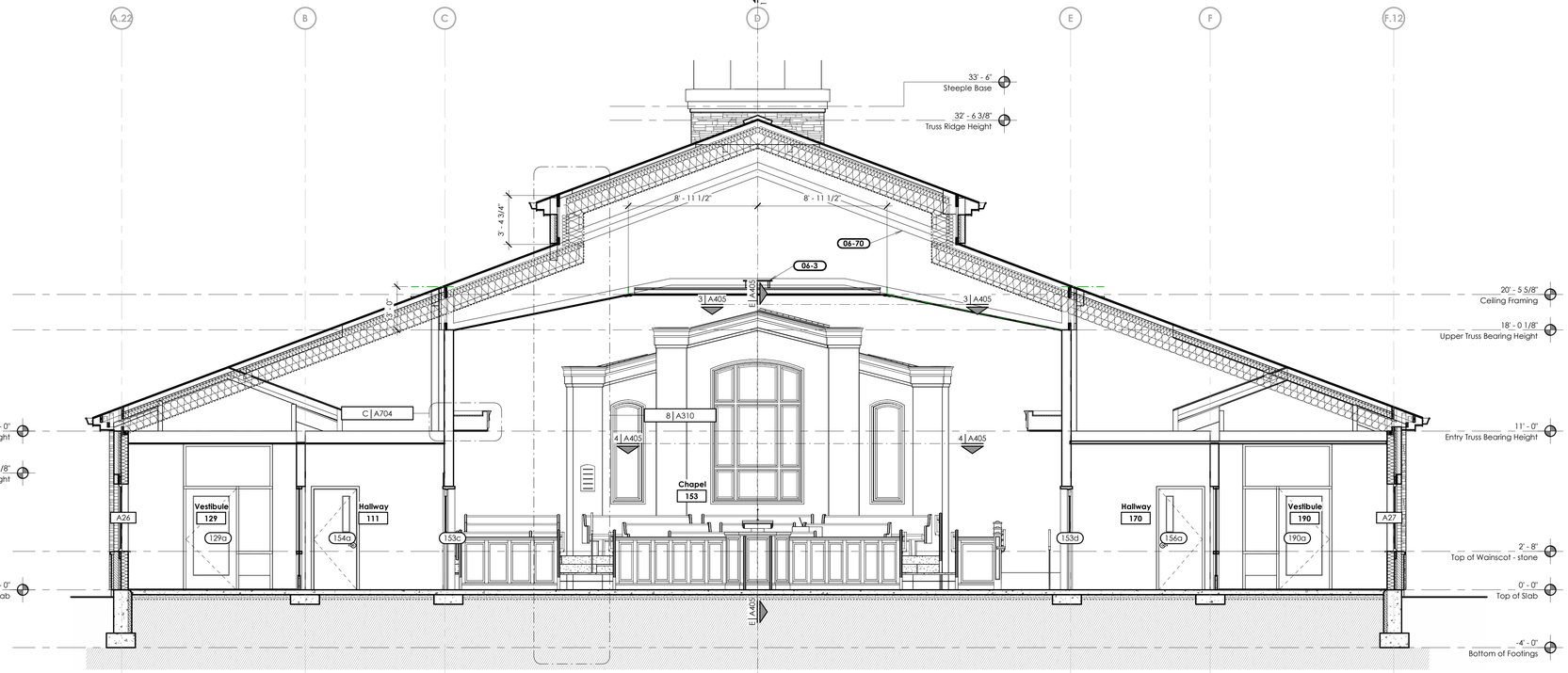

16 Section

Scale: 1/4" = 1'-0"

Keyed Notes

01-5	Artwork location. Do not install any equipment or devices in this location.
03-2	Concrete floor slab. See Structural Sheets.
04-1	Manufactured Stone Veneer System.
04-2	Brick veneer field course. Brick Type#1.
04-3	Brick veneer soldier course. Brick Type #2.
04-4	Manufactured stone veneer capstone.
04-5	Brick veneer stacked course. Brick Type #2.
06-3	Attic access catwalk. See A/A102. Center catwalk in truss at the high point of the truss.
06-21	Hardwood chair rail. See B/A705. At windows, see A/A705.
06-70	Piggy-back trusses. See Structural Sheets. Include insulation cords to create continuous vent space and insulation envelope.
07-13	Corrugated plastic baffle with 4" ventilation space above.
07-23	Metal Drip Edge Flashing. See J/A502.
07-25	Prefinished Metal Fascia. See J/A502.
07-27	Prefinished Metal Downspout. Typical. See H/A502.
07-28	Prefinished metal ridge vent. See F/A122.
07-39	Fill entire cavity with insulation. At roof locations, leave 4" ventilation space to deck. Install baffles as necessary to maintain ventilation space.
07-40	Prefinished metal fascia return. See A & B/A503.
07-48	Install baffles or other method to support insulation above the framed pillars.
09-3	Painted and textured 5/8" Type X gypsum board.
09-14	Carpet Base, See Finish Schedule/Specifications.
09-16	Sisal Wall Covering.
09-24	Painted wood trim. See J/A704.
09-31	Interior 5/8" Type X gypsum board over vapor retarder membrane. Typical at all side and rear trusses.
28-2	Fire alarm control panel location. See A101 and electrical sheets.
31-2	4" base below concrete slab.
32-5	Concrete sidewalk at 2% slope with 18" base. See Site Sheets.

bhd ARCHITECTS
www.bhdarchitects.com
Phone 801.571.0010
Fax 801.571.0303
Toll Free 888.571.0010
65 East Wadsworth Park Drive
Suite 205 Draper, Utah 84020

LICENSED ARCHITECT
Lafe Theodore Harris
15 Aug 24
6768878-0301
STATE OF UTAH

THE CHURCH OF JESUS CHRIST OF LATTER-DAY SAINTS

Orem YSA 3rd 10 Ward Building
Orem UT YSA 3rd Stake

Approx. 1700 West 575 South
Vineyard, Utah 84059

Owner #: 390-1876
Plan Series: 2024 10 Ward SC
County Parcel: 39-228-0001
BID #: 2344
Date: 15 Aug 2024

Drawing Issue and Revision Schedule

#	Date	Description
1	15 Aug 2024	Bid Drawings

Building Sections

A306

Printed 8/19/2024 11:04:08 PM

Note:
Air barrier and continuous sheet vapor retarder shall be installed as indicated on Sheet A101.

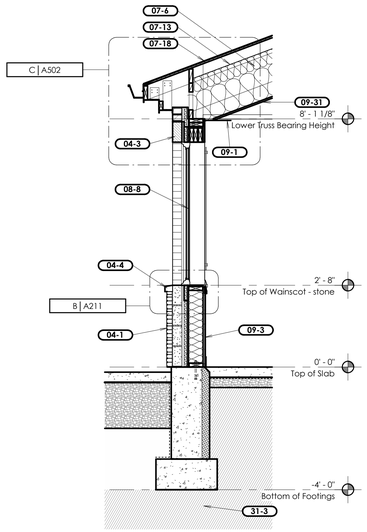

1 Wall Section 1
Scale: 1/2" = 1'-0"

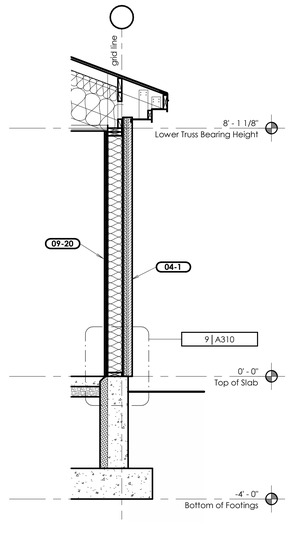

2 Wall Section 2
Scale: 1/2" = 1'-0"

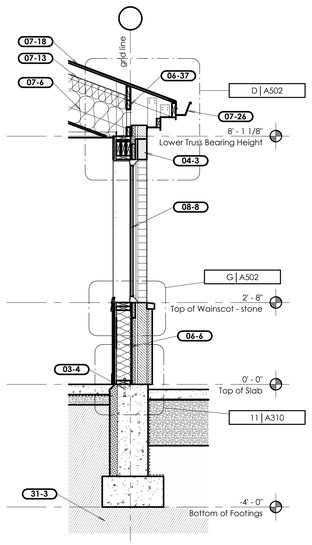

3 Wall Section 3
Scale: 1/2" = 1'-0"

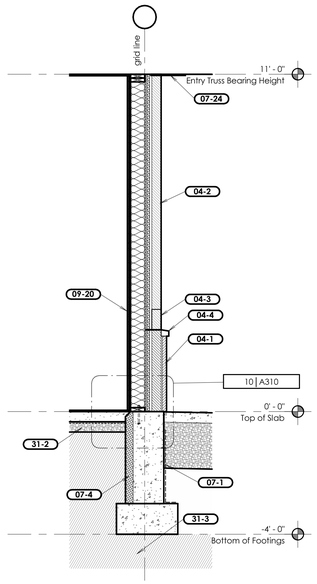

4 Wall Section 4
Scale: 1/2" = 1'-0"

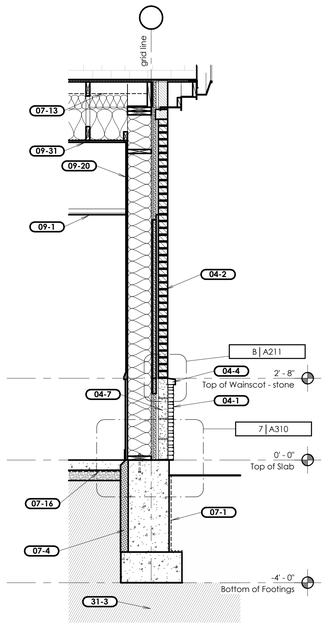

5 Wall Section 5
Scale: 1/2" = 1'-0"

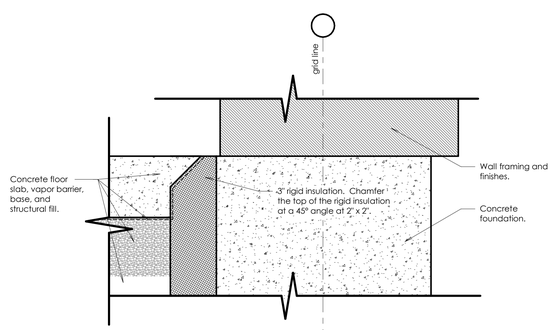

13 Foundation Rigid Insulation Detail
Scale: 3" = 1'-0"

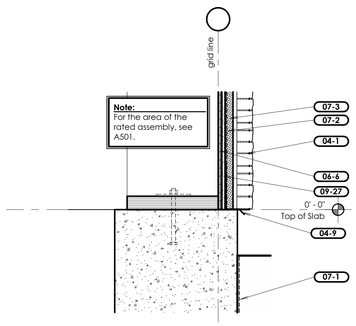

14 Wall Base Detail
Scale: 1 1/2" = 1'-0"

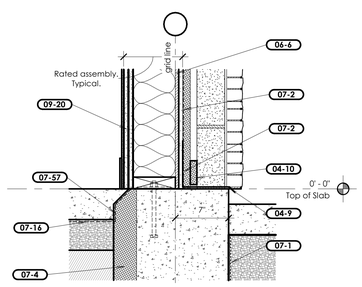

11 Wall Base Detail
Scale: 1 1/2" = 1'-0"

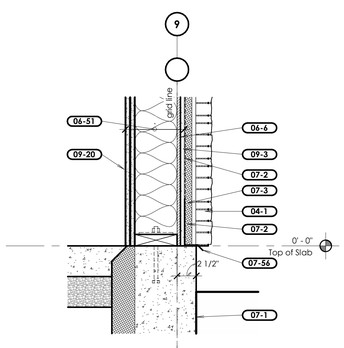

9 Wall Base Detail
Scale: 1 1/2" = 1'-0"

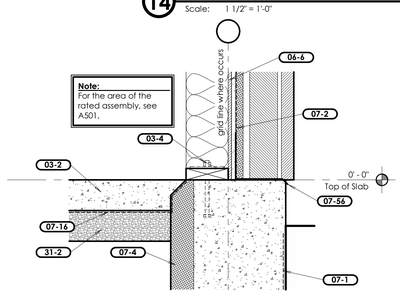

10 Wall Base Detail
Scale: 1 1/2" = 1'-0"

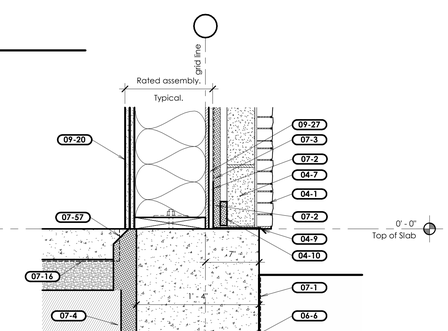

7 Wall Base Detail
Scale: 1 1/2" = 1'-0"

Keyed Notes

03-2	Concrete floor slab. See Structural Sheets.
03-4	Anchor bolt. See Structural Sheets.
04-1	Manufactured Stone Veneer System.
04-2	Brick veneer field course. Brick Type#1.
04-3	Brick veneer soldier course. Brick Type #2.
04-4	Manufactured stone veneer capstone.
04-7	4" CMU block.
04-9	Weep vents and foundation flashing.
04-10	Mortar guard.
06-6	Wall Sheathing. See Structural Drawings.
06-37	Truss blocking. Top chord shall have ventilation opening. See Structural Sheets.
06-51	2-hour fire rated and non-combustible exterior wall assembly. See 1 & 2/A105 and General Note 4/A105.
07-1	Bituminous dampproofing from 2" below grade down to the bottom of the foundation wall and across the top of the footing.
07-2	Plastic Sheet Air Barrier.
07-3	1" Extruded Polystyrene Board Insulation.
07-4	3" rigid insulation at the foundation wall. Extend insulation to the top of the floor slab. Install 2" x 2" chamfer at the top of the insulation.
07-6	Fiberglass batt roof insulation. See B/A502.
07-13	Corrugated plastic baffle with 4" ventilation space above.
07-16	Below-grade Vapor Retarder System.
07-18	Asphalt shingle roofing over underlayments. Install secondary underlayment over the entire roof.
07-24	Metal Soffit Panels.
07-26	Prefinished Metal Rain Gutter. See Detail J/A502.
07-56	Foundation flashing.
07-57	Turn vapor retarder up 3" minimum at rigid insulation.
08-8	Vinyl Framed Window. Refer to Window Elevations A601.
09-1	Suspended ceiling system. See Reflected Ceiling Plan.
09-3	Painted and textured 5/8" Type X gypsum board.
09-20	(2) layers of 5/8" Type X gypsum board on the interior side of all exterior walls up to roof level. Install continuous sheet vapor retarder between gypsum board and wall studs. Seal vapor retarder air tight.
09-27	1/2" exterior-grade gypsum sheathing at all exterior walls. Install air barrier on top of gypsum sheathing.
09-31	Interior 5/8" Type X gypsum board over vapor retarder membrane. Typical at all side and rear trusses.
31-2	4" base below concrete slab.
31-3	Engineered structural fill down to bedrock. See Site Sheets.

bhd ARCHITECTS
www.bhdarchitects.com
Phone 801.571.0010
Fax 801.571.0303
Toll Free 888.571.0010
65 East Wadsworth Park Drive
Suite 205 Draper, Utah 84020

LICENSED ARCHITECT
Lafe Theodore Harris
15 Aug 2024
6768878-0301
STATE OF UTAH

THE CHURCH OF JESUS CHRIST OF LATTER-DAY SAINTS

Orem YSA 3rd 10 Ward Building
Orem UT YSA 3rd Stake

Approx. 1700 West 575 South
Vineyard, Utah 84059

Date: 13 Aug 2024
BHD #: 2344
County Parcel: 57-228-0001
Plan Series: 2024 10 Ward-SC
Owner #: 590-1876

Drawing Issue and Revision Schedule

#	Date	Description
1	15 Aug 2024	Bid Drawings

Wall Sections and Details

A310

Printed 8/19/2024 11:52:14 PM

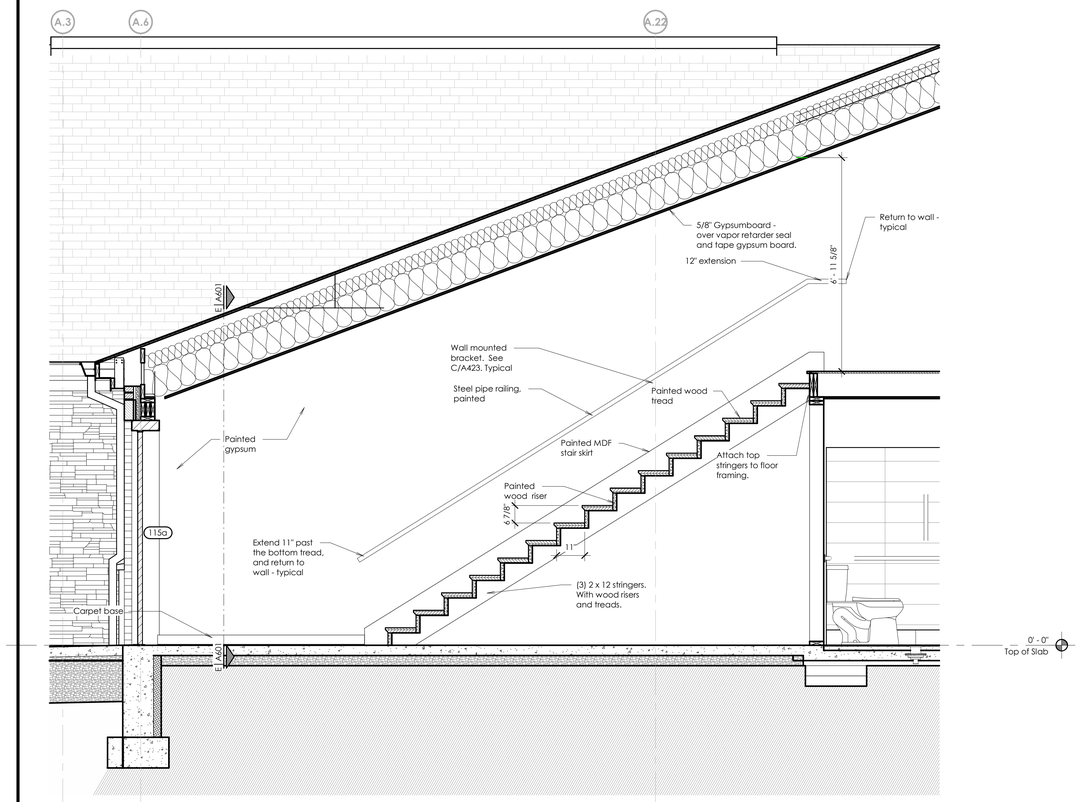

A Stair Section

Scale: 1/2" = 1'-0"

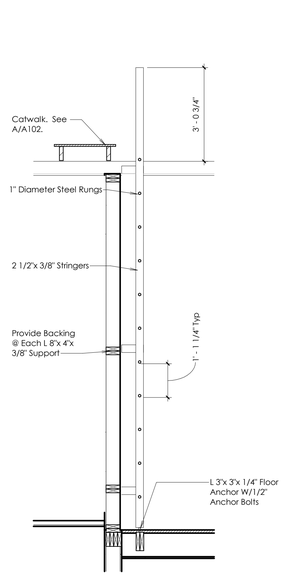

B Attic Access Ladder

Scale: 1/2" = 1'-0"

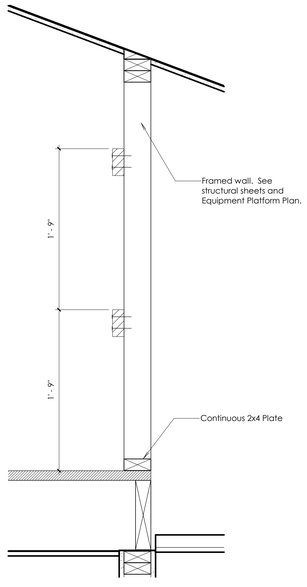

C Equipment Platform Railing Detail

Scale: 1 1/2" = 1'-0"

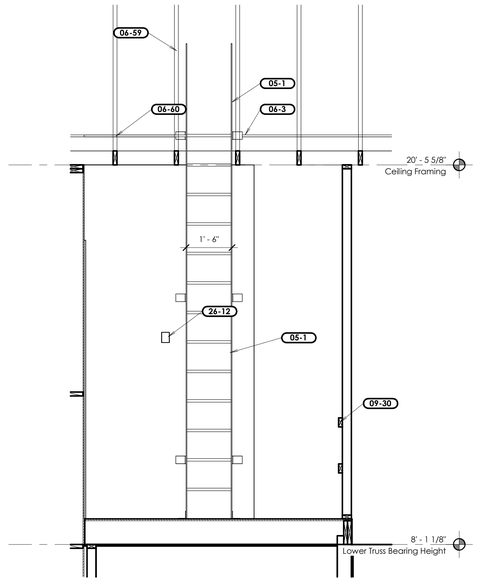

D Attic Access Ladder

Scale: 1/2" = 1'-0"

Keyed Notes

05-1	Painted steel ladder. See B/A314. Center ladder between trusses.
06-3	Attic access catwalk. See A/A102. Center catwalk in truss at the high point of the truss.
06-59	Trussed rafters. See Structural Sheets.
06-60	Install 48" x 48" landing similar in construction to the catwalk adjacent to the top of the ladder.
09-30	Wall framing with safety railing. Typical at all wall framing adjacent to lay-in ceilings or other ceilings with no floor framing or sheathing. See Structural Sheets and C/A314.
26-12	Wall-mounted light switch to attic lights. See Electrical Sheets.

bhd ARCHITECTS
www.bhdarchitects.com
Phone 801.571.0010
Fax 801.571.0303
Toll Free 888.571.0010
65 East Wadsworth Park Drive
Suite 205 Draper, Utah 84020

LICENSED ARCHITECT
Lafe Theodore Harris
15 Aug 2024
6736878-0301
STATE OF UTAH

THE CHURCH OF JESUS CHRIST OF LATTER-DAY SAINTS

Orem YSA 3rd 10 Ward Building
Orem UT YSA 3rd Stake

Approx. 1700 West 575 South
Vineyard, Utah 84059

Date: 15 Aug 2024
BHD #: 2344
County Parcel: 37:228:0001
Plan Series: 2024 10 Ward SLC
Owner #: 390-1876

Drawing Issue and Revision Schedule

#	Date	Description
1	15 Aug 2024	Bid Drawings

Wall Sections

A314

Printed 8/19/2024 8:03:34 AM

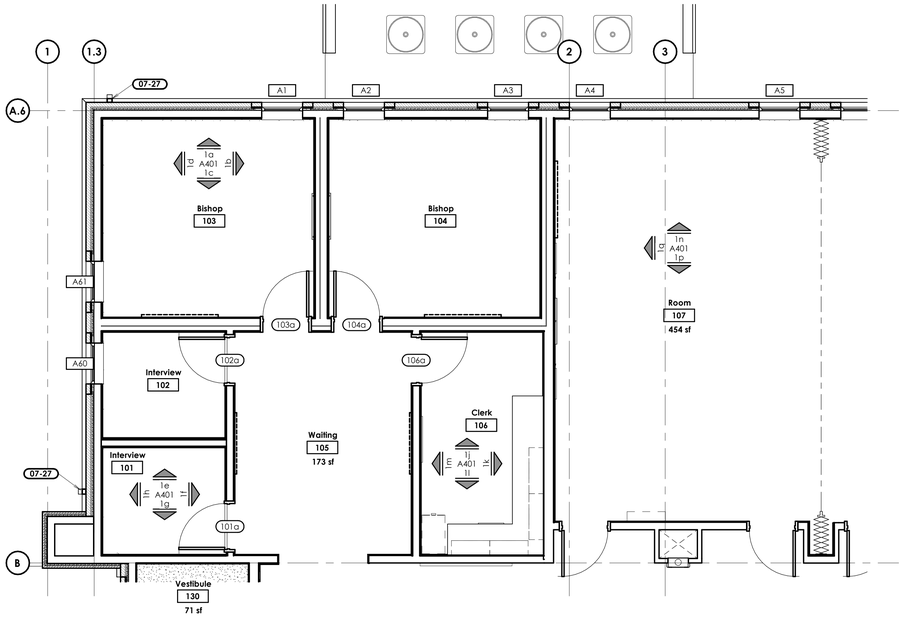

1 Enlarged Bishop Suite and Multipupose Room

Scale: 1/4" = 1'-0"



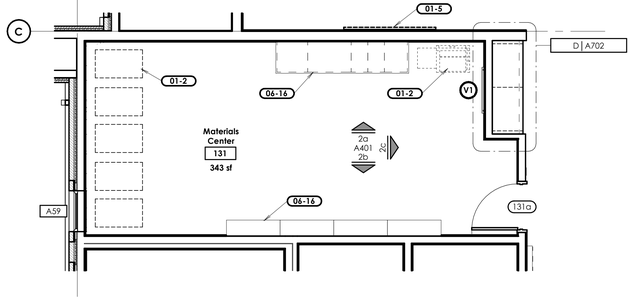

2 Enlarged Floor Plan

Scale: 1/4" = 1'-0"

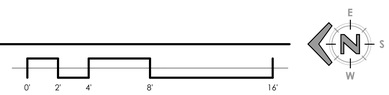

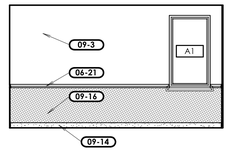

1a Elevation

Scale: 1/4" = 1'-0"

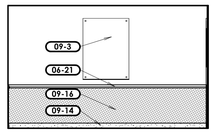

1b Elevation

Scale: 1/4" = 1'-0"

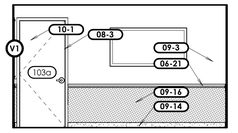

1c Elevation

Scale: 1/4" = 1'-0"

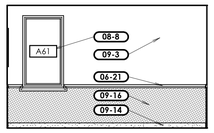

1d Elevation

Scale: 1/4" = 1'-0"

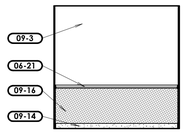

1e Elevation

Scale: 1/4" = 1'-0"

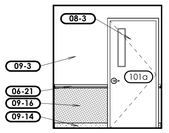

1f Elevation

Scale: 1/4" = 1'-0"

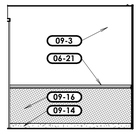

1g Elevation

Scale: 1/4" = 1'-0"

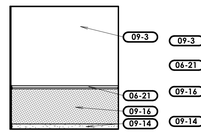

1h Elevation

Scale: 1/4" = 1'-0"

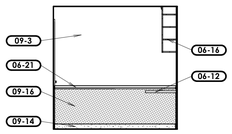

1j Elevation

Scale: 1/4" = 1'-0"

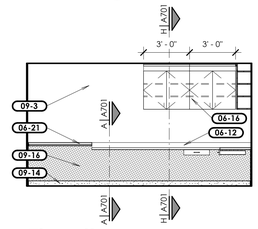

1k Elevation

Scale: 1/4" = 1'-0"

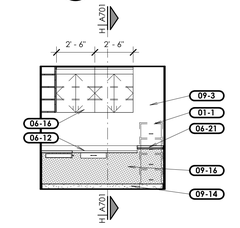

1l Elevation

Scale: 1/4" = 1'-0"

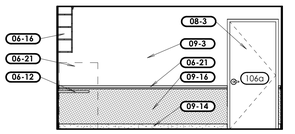

1m Elevation

Scale: 1/4" = 1'-0"

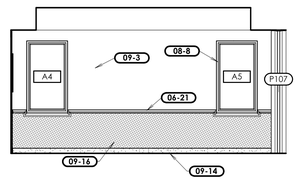

1n Elevation

Scale: 1/4" = 1'-0"

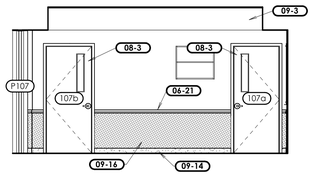

1p Elevation

Scale: 1/4" = 1'-0"

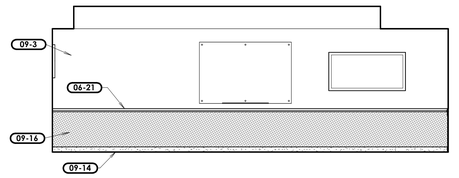

1q Elevation

Scale: 1/4" = 1'-0"

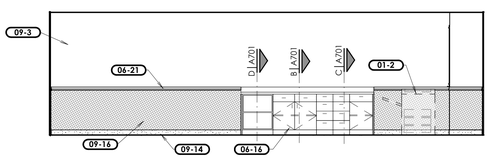

2a Elevation

Scale: 1/4" = 1'-0"

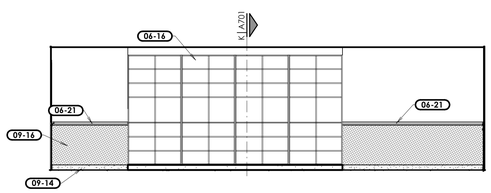

2b Elevation

Scale: 1/4" = 1'-0"

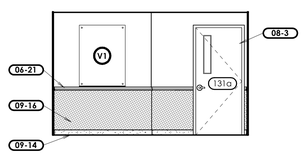

2c Elevation

Scale: 1/4" = 1'-0"

Keyed Notes

01-1	Furniture Furnished and Installed by Owner.
01-2	Equipment Furnished and Installed by Owner.
01-5	Artwork location. Do not install any equipment or devices in this location.
06-12	Plastic Laminate Countertop and Splash.
06-16	Architectural Casework, Refer to Cabinet Details.
06-21	Hardwood chair rail. See B/A705. At windows, see A/A705.
07-27	Prefinished Metal Downspout. Typical. See H/A502.
08-3	Flush Wood Door, Refer to Door Schedule & Details.
08-8	Vinyl Framed Window, Refer to Window Elevations A601.
09-3	Painted and textured 5/8" Type X gypsum board.
09-14	Carpet Base, See Finish Schedule/Specifications.
09-16	Sisal Wall Covering.
10-1	Glass Board, Refer to Furnishings Plan on Sheet F101 and Visual Display Details on Sheet F103.

bhd ARCHITECTS
www.bhdarchitects.com
Phone 801.571.0010
Fax 801.571.0303
Toll Free 888.571.0010
65 East Wadsworth Park Drive
Suite 205 Draper, Utah 84020

LICENSED ARCHITECT
Lafe Theodore Harris
15 Aug 2024
7288896-0301
STATE OF UTAH

THE CHURCH OF JESUS CHRIST OF LATTER-DAY SAINTS

Orem YSA 3rd 10 Ward Building
Orem UT YSA 3rd Stake

Approx. 1700 West 575 South
Vineyard, Utah 84059

Owner #: 590-1878
Plan Series: 2024 10 Ward S-C
County Parcel: 37-228-0001
BHD #: 2344
Date: 15 Aug 2024

Drawing Issue and Revision Schedule		
#	Date	Description
1	15 Aug 2024	Bid Drawings

Enlarged Plans & Elevations

A401

Keyed Notes

01-2	Equipment Furnished and Installed by Owner.
06-12	Plastic Laminate Countertop and Splash.
06-16	Architectural Casework, Refer to Cabinet Details.
06-21	Hardwood chair rail. See B/A705. At windows, see A/A705.
06-48	Movable rostrum casework. See A424 - A425.
06-69	Notch backsplash around window stool. Finish all exposed faces of cut backsplash with plastic laminate.
07-27	Prefinished Metal Downspout. Typical. See H/A502.
08-3	Flush Wood Door. Refer to Door Schedule & Details.
09-3	Painted and textured 5/8" Type X gypsum board.
09-5	Thinset ceramic wall tile system. Install bullnose tile at all exposed tile edges. Align joints with base tile and with floor tile where possible. Refer to Finish Legend & Interior Elevations.
09-8	Tile Base, See Finish Schedule/Specification.
09-14	Carpet Base, See Finish Schedule/Specifications.
09-16	Sisal Wall Covering.
09-37	Sealant at exposed tile edges. Typical of all wall and base tile.
09-41	All wall tile shall be full height wall tile without cuts.
09-43	End of wall tile. See interior elevations.
10-1	Glass Board, Refer to Furnishings Plan on Sheet F101 and Visual Display Details on Sheet F103.
10-10	Paper Towel Dispenser.
10-17	Mirror with aluminum frame. Install spacers behind all mirrors as needed where mirror extends above the top of the wall tile.
10-22	Semi-recessed fire extinguisher cabinet. See F/A702 and Code Plans.
11-1	Electric Range.
11-2	Refrigerator.
22-4	Floor Mounted, Tank Water Closet, Refer to Plumbing Drawings.
22-8	Lavatory, Refer to Plumbing Drawings.
22-9	Sink, Refer to Plumbing Drawings.
27-6	Flat Panel Television Monitor. Refer to Audio/Visual Drawings.

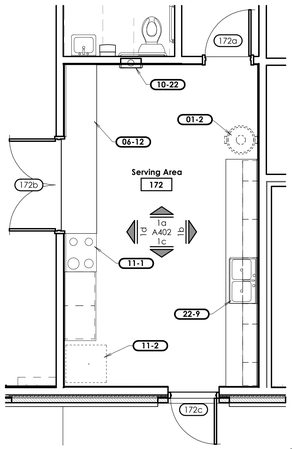

1 Enlarged Floor Plan
Scale: 1/4" = 1'-0"



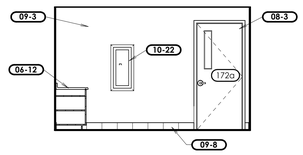

1a Elevation
Scale: 1/4" = 1'-0"

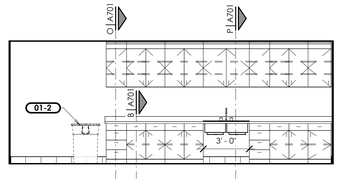

1b Elevation
Scale: 1/4" = 1'-0"

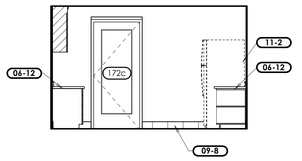

1c Elevation
Scale: 1/4" = 1'-0"

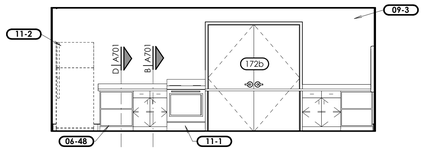

1d Elevation
Scale: 1/4" = 1'-0"

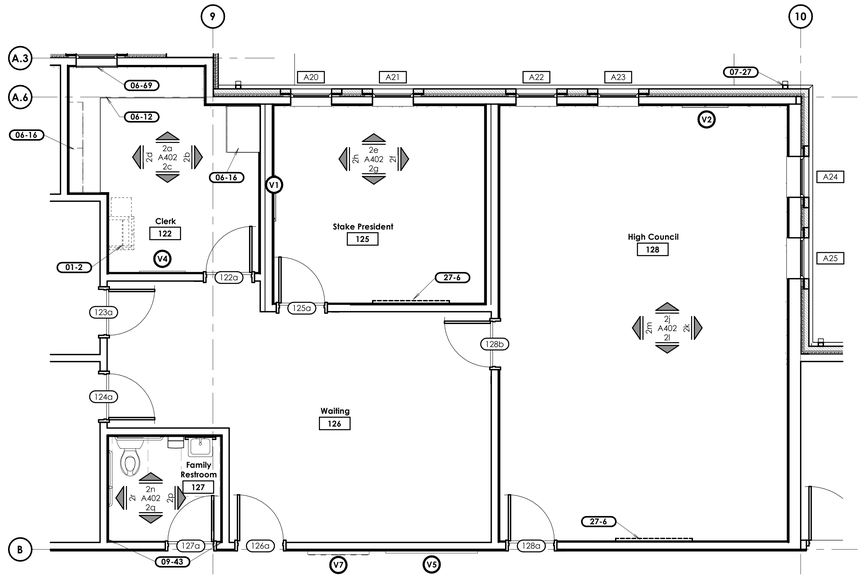

2 Enlarged Stake Suite
Scale: 1/4" = 1'-0"



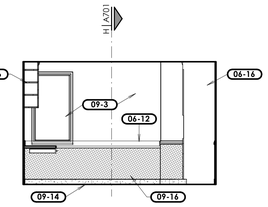

2a Elevation
Scale: 1/4" = 1'-0"

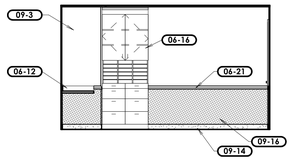

2b Elevation
Scale: 1/4" = 1'-0"

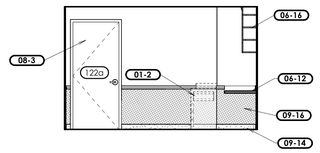

2c Elevation
Scale: 1/4" = 1'-0"

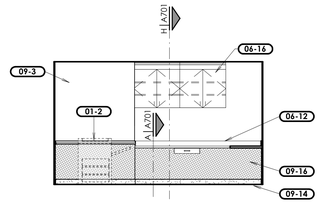

2d Elevation
Scale: 1/4" = 1'-0"

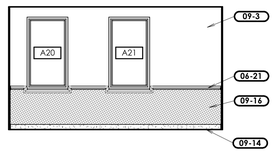

2e Elevation
Scale: 1/4" = 1'-0"

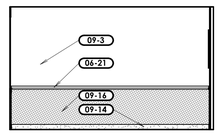

2f Elevation
Scale: 1/4" = 1'-0"

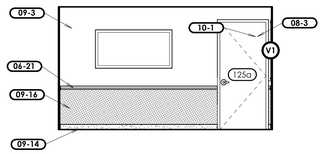

2g Elevation
Scale: 1/4" = 1'-0"

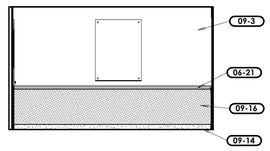

2h Elevation
Scale: 1/4" = 1'-0"

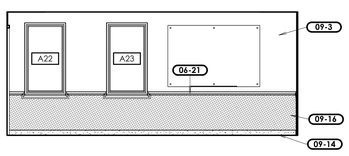

2j Elevation
Scale: 1/4" = 1'-0"

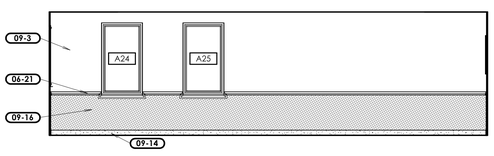

2k Elevation
Scale: 1/4" = 1'-0"

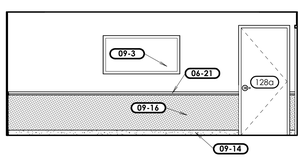

2l Elevation
Scale: 1/4" = 1'-0"

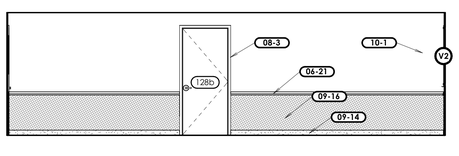

2m Elevation
Scale: 1/4" = 1'-0"

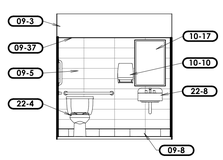

2n Elevation
Scale: 1/4" = 1'-0"

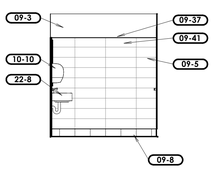

2p Elevation
Scale: 1/4" = 1'-0"

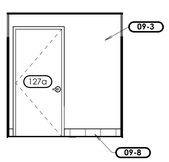

2q Elevation
Scale: 1/4" = 1'-0"

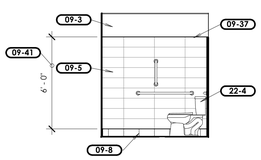

2r Elevation
Scale: 1/4" = 1'-0"

bhd ARCHITECTS
www.bhdarchitects.com
Phone 801.571.0010
Fax 801.571.0303
Toll Free 888.571.0010
65 East Wadsworth Park Drive
Suite 205 Draper, Utah 84020

LICENSED ARCHITECT
Lafe Theodore Harris
7838976-0301
15 Aug 2024
STATE OF UTAH

THE CHURCH OF JESUS CHRIST OF LATTER-DAY SAINTS

Orem YSA 3rd 10 Ward Building
Orem UT YSA 3rd Stake

Approx. 1700 West 575 South
Vineyard, Utah 84059

Owner #: 390-187a
Plan Series: 2024 10 Ward SC
County Parcel: 57:220:0001
BID #: 2344
Date: 15 Aug 2024

Drawing Issue and Revision Schedule

#	Date	Description
1	15 Aug 2024	Bid Drawings

Enlarged Plans & Elevations

A402

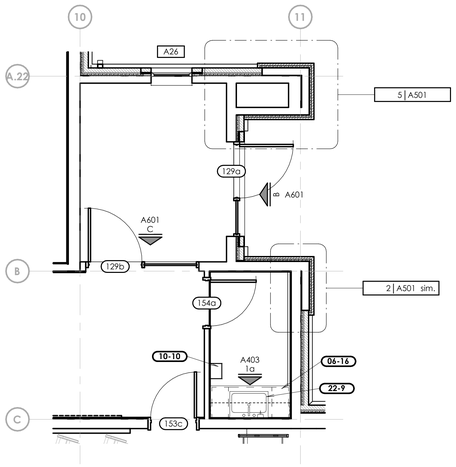

1 Enlarged Floor Plan

Scale: 1/4" = 1'-0"



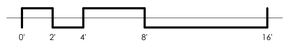

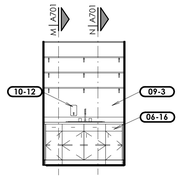

1a Elevation

Scale: 1/4" = 1'-0"

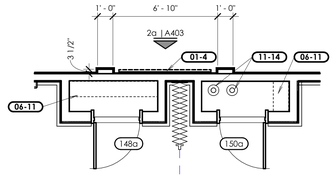

2 Enlarged Art Wall

Scale: 1/4" = 1'-0"

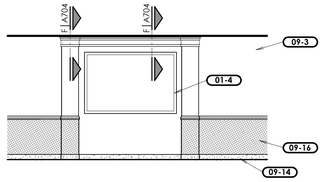

2a Elevation

Scale: 1/4" = 1'-0"

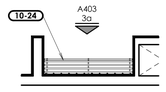

3 Enlarged Coat Rack

Scale: 1/4" = 1'-0"



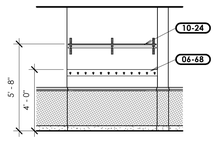

3a Elevation

Scale: 1/4" = 1'-0"

Keyed Notes

01-4	Artwork Furnished and Installed by Owner. Contractor shall provide blocking in the wall.
06-11	Wall-Mounted Open Adjustable Shelving. See Q/A701.
06-16	Architectural Casework. Refer to Cabinet Details.
06-68	3/4" x 5" hardwood hook strip with hooks at 6" o.c. Extend ends to 2" from end walls. See A/A702.
09-3	Painted and textured 5/8" Type X gypsum board.
09-14	Carpet Base, See Finish Schedule/Specifications.
09-16	Sisal Wall Covering.
10-10	Paper Towel Dispenser.
10-12	Soap Dispenser.
10-24	Wall Mounted Coat Rack. Refer to Detail A/A702.
11-14	Volleyball post insert for storage. See D and I/A705.
22-9	Sink. Refer to Plumbing Drawings.

bhd ARCHITECTS
www.bhdarchitects.com
Phone 801.571.0010
Fax 801.571.0303
Toll Free 888.571.0010
65 East Wadsworth Park Drive
Suite 205 Draper, Utah 84020

LICENSED ARCHITECT
Lafe Theodore Harris
15 Aug 2024
7815896-0301
STATE OF UTAH

THE CHURCH OF JESUS CHRIST OF LATTER-DAY SAINTS

Orem YSA 3rd 10 Ward Building
Orem UT YSA 3rd Stake

Approx. 1700 West 575 South
Vineyard, Utah 84059

Date: 15 Aug 2024
BHD #: 2344
County Parcel: 39-228-0001
Plan Series: 2024 10 Ward GC
Owner #: 5790-1876

Drawing Issue and Revision Schedule

1	15 Aug 2024	Bid Drawings

Enlarged Plans And Elevations

A403

Printed 8/19/2024 9:35:15 PM

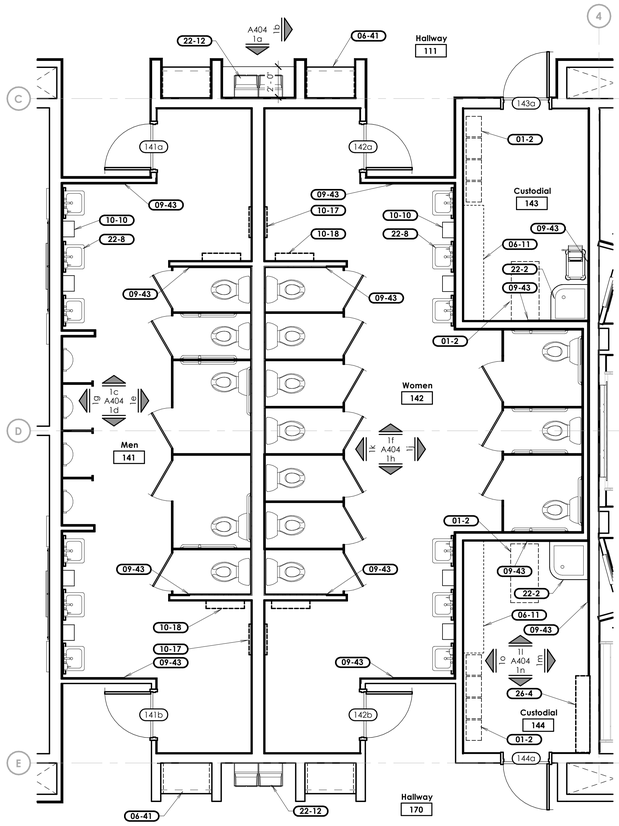

1 Enlarged Restrooms

Scale: 1/4" = 1'-0"

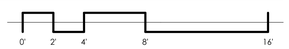



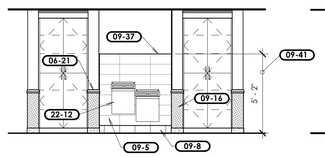

1a Elevation

Scale: 1/4" = 1'-0"

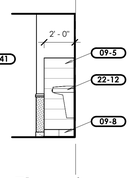

1b Elevation

Scale: 1/4" = 1'-0"

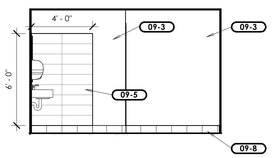

1c Elevation

Scale: 1/4" = 1'-0"

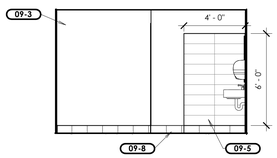

1d Elevation

Scale: 1/4" = 1'-0"

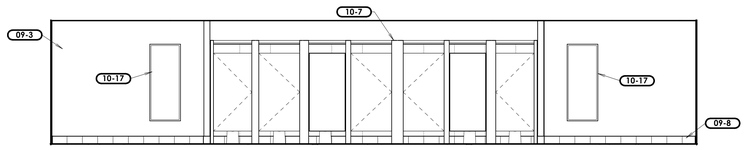

1e Elevation

Scale: 1/4" = 1'-0"

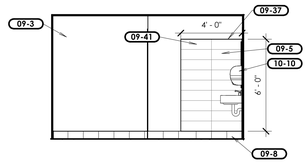

1f Elevation

Scale: 1/4" = 1'-0"

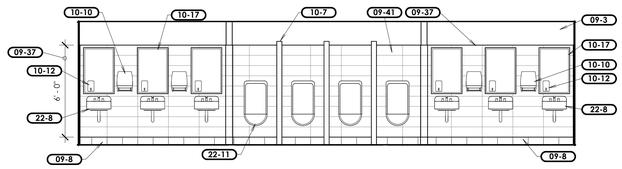

1g Elevation

Scale: 1/4" = 1'-0"

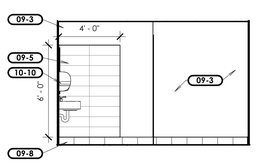

1h Elevation

Scale: 1/4" = 1'-0"

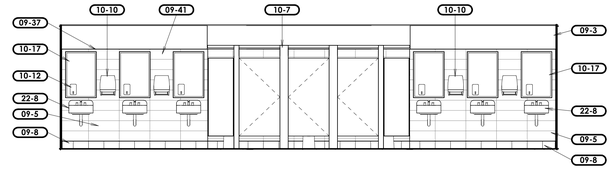

1j Elevation

Scale: 1/4" = 1'-0"

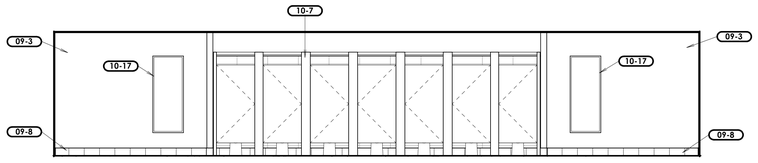

1k Elevation

Scale: 1/4" = 1'-0"

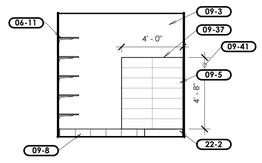

1l Elevation

Scale: 1/4" = 1'-0"

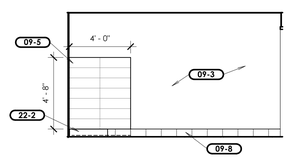

1m Elevation

Scale: 1/4" = 1'-0"

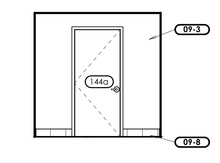

1n Elevation

Scale: 1/4" = 1'-0"

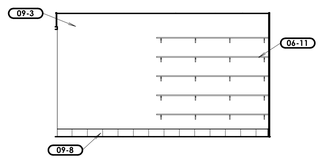

1o Elevation

Scale: 1/4" = 1'-0"

Keyed Notes

01-2	Equipment Furnished and Installed by Owner.
06-11	Wall-Mounted Open Adjustable Shelving, See Q/A701.
06-21	Hardwood chair rail. See B/A705. At windows, see A/A705.
06-41	Full-height cabinetry. See A702.
09-3	Painted and textured 5/8" Type X gypsum board.
09-5	Thinset ceramic wall tile system. Install bullnose tile at all exposed tile edges. Align joints with base tile and with floor tile where possible. Refer to Finish Legend & Interior Elevations.
09-8	Tile Base. See Finish Schedule/Specification.
09-16	Sisal Wall Covering.
09-37	Sealant at exposed tile edges. Typical of all wall and base tile.
09-41	All wall tile shall be full height wall tile without cuts.
09-43	End of wall tile. See interior elevations.
10-7	Metal Toilet Compartment.
10-10	Paper Towel Dispenser.
10-12	Soap Dispenser.
10-17	Mirror with aluminum frame. Install spacers behind all mirrors as needed where mirror extends above the top of the wall tile.
10-18	Metal Shelf.
22-2	Floor Sink. Refer to Plumbing Drawings.
22-8	Lavatory. Refer to Plumbing Drawings.
22-11	Font Equipment Skid. Refer to Plumbing Drawings.
22-12	Water Cooler. Provide Solid Blocking in Wall as Required by Manufacturer. Refer to Plumbing Drawings.
26-4	Electrical Panel. Refer to Electrical Drawings.

bhd ARCHITECTS
www.bhdarchitects.com
Phone 801.571.0010
Fax 801.571.0303
Toll Free 888.571.0010
65 East Wadsworth Park Drive
Suite 205 Draper, Utah 84020

LICENSED ARCHITECT Lafe Theodore Harris 15 Aug 2024 7738896-0301 STATE OF UTAH

THE CHURCH OF JESUS CHRIST OF LATTER-DAY SAINTS

Orem YSA 3rd 10 Ward Building
Orem UT YSA 3rd Stake

Approx. 1700 West 575 South
Vineyard, Utah 84059

Date: 15 Aug 2024
BHD #: 2344
County Parcel: 37-228-0001
Plan Series: 2024 10 Ward S.C.
Owner #: 590-1878

Drawing Issue and Revision Schedule

#	Date	Description
1	15 Aug 2024	Bid Drawings

Enlarged Restroom Plans

A404

Printed: 8/19/2024 9:38:44 PM

Keyed Notes

01-3	Hymn Number Board Furnished and Installed by Owner.
01-8	Organ, furnished and installed by the Owner. Coordinate with the model provided by the owner and install all power and AV wiring, etc., as required for the organ.
01-9	Piano, furnished and installed by the Owner.
06-15	Hardwood lectern. See Sheet A422.
06-22	Hardwood trim. See Details and Specifications.
06-31	Control pedestal. See B, C, and E/A421.
06-55	Sloped section of light cove.
06-56	Break line of slope. Transition between sloped and level sections of light cover.
09-32	Organ chamber grille cloth on gypsum board. Paint gypsum board behind grille cloth black.
09-33	Organ chamber grille cloth over expanded metal reinforcing. Paint expanded metal reinforcing black.
12-4	Upholstered pews furnished and installed by Owner. Typical.
26-5	Light fixture. See Electrical Sheets.

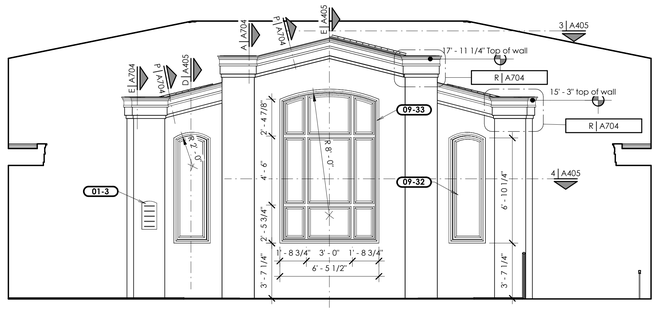

A Rostrum Elevation

Scale: 1/4" = 1'-0"

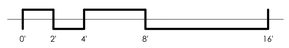

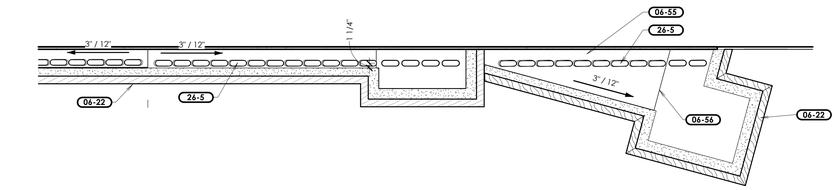

3 Accent Wall Light Cove

Scale: 3/4" = 1'-0"

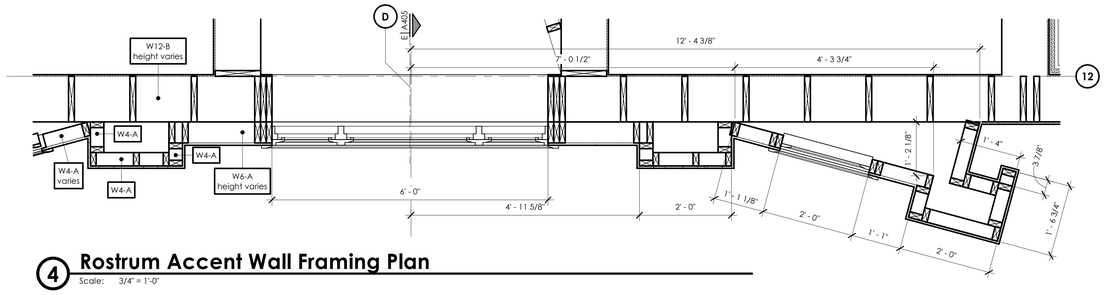

4 Rostrum Accent Wall Framing Plan

Scale: 3/4" = 1'-0"

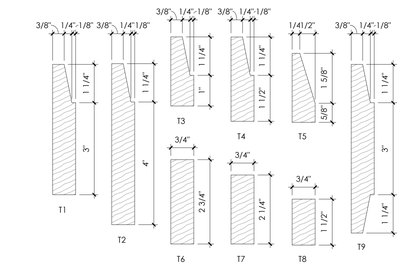

B Millwork Hardwood Trim

Scale: 6" = 1'-0"

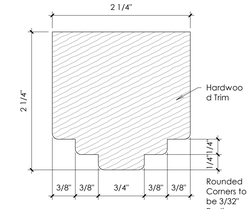

C Pulpit Trim

Scale: 12" = 1'-0"

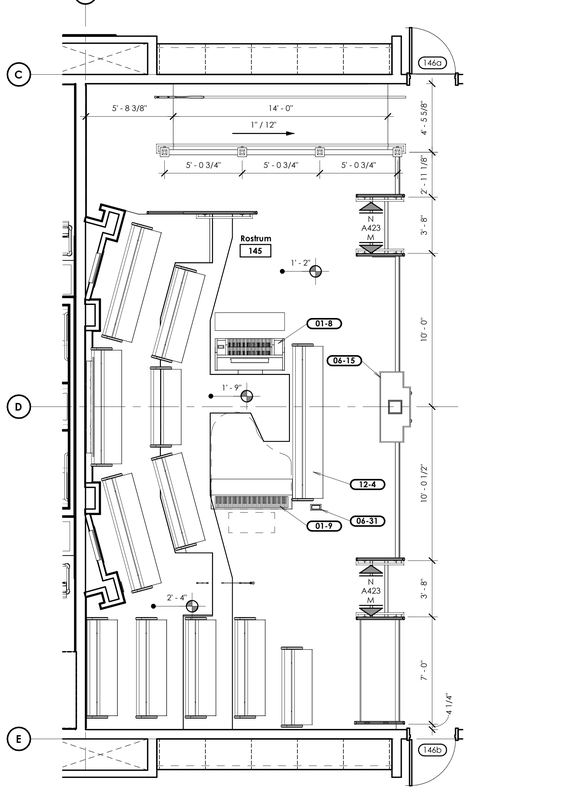

1 Rostrum Plan

Scale: 1/4" = 1'-0"

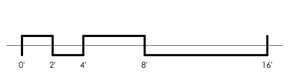

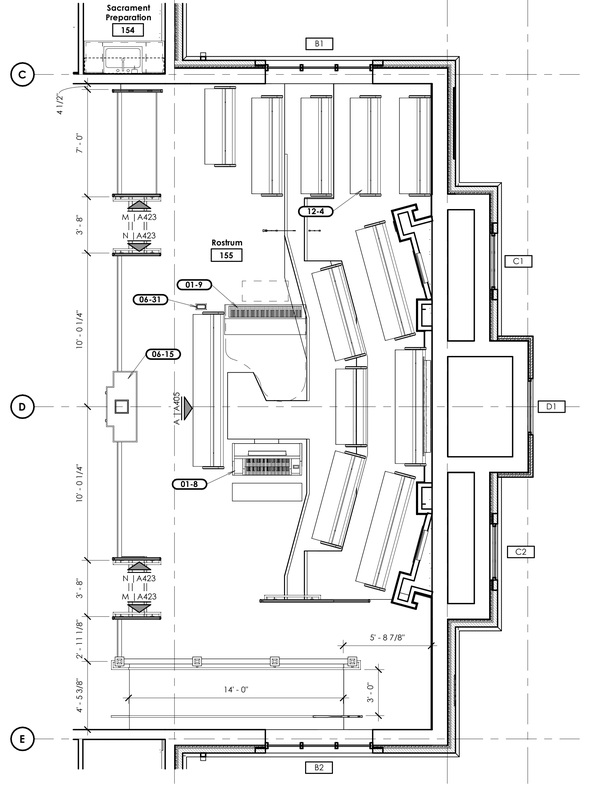

2 Rostrum Plan

Scale: 1/4" = 1'-0"

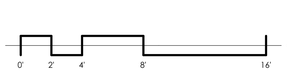

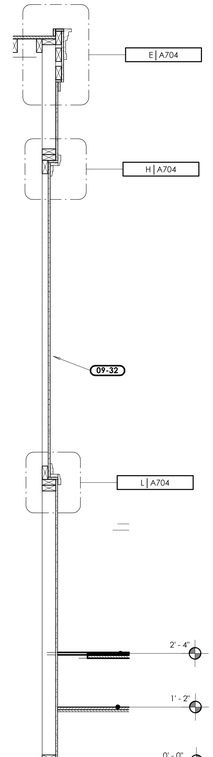

D Rostrum Side Accent Wall Section

Scale: 3/4" = 1'-0"

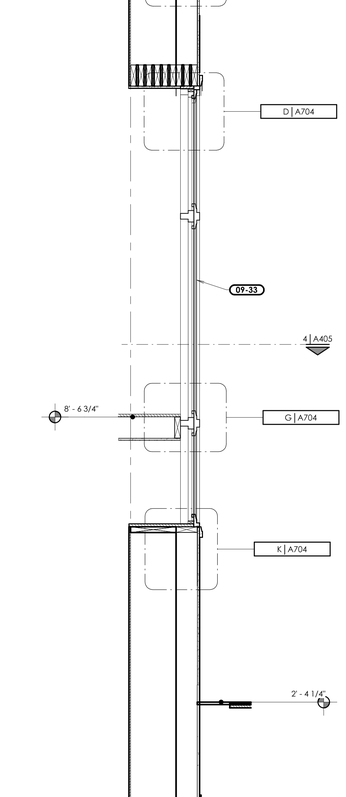

E Rostrum Center Accent Wall Section

Scale: 3/4" = 1'-0"

bhd ARCHITECTS
www.bhdarchitects.com
Phone 801.571.0010
Fax 801.571.0303
Toll Free 888.571.0010
65 East Wadsworth Park Drive
Suite 205 Draper, Utah 84020

LICENSED ARCHITECT
Lafe Theodore Harris
15 Aug 2024
7855896-0301
STATE OF UTAH

THE CHURCH OF JESUS CHRIST OF LATTER-DAY SAINTS

Orem YSA 3rd 10 Ward Building
Orem UT YSA 3rd Stake

Approx. 1700 West 575 South
Vineyard, Utah 84059

Owner #: 390-1876
Plan Series: 2024 10 Ward SC
County Parcel: 39-228:0001
BHD #: 2344
Date: 15 Aug 2024

Drawing Issue and Revision Schedule

#	Date	Description
1	15 Aug 2024	Bid Drawings

Enlarged Plan & Elevations of the Rostrums

A405

Printed 8/19/2024 9:40:18 PM

Keyed Notes

06-16	Architectural Casework, Refer to Cabinet Details.
06-20	Wood Veneer Paneling.

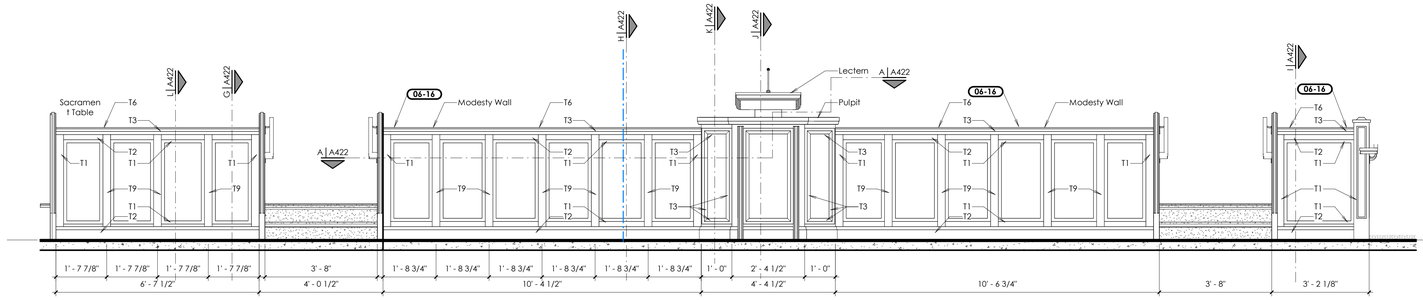

A Rostrum Casework Front Elevation

Scale: 1/2" = 1'-0"

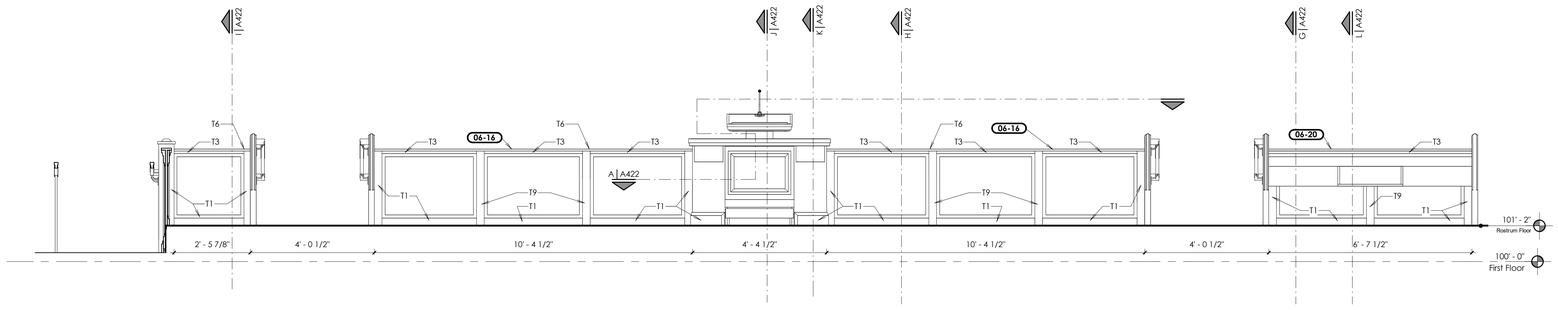

D Rostrum Casework Rear Elevation

Scale: 1/2" = 1'-0"

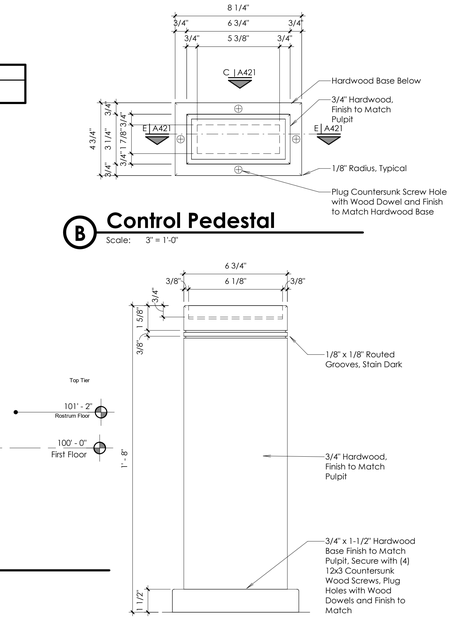

B Control Pedestal

Scale: 3" = 1'-0"

C Control Pedestal Elevation

Scale: 3" = 1'-0"

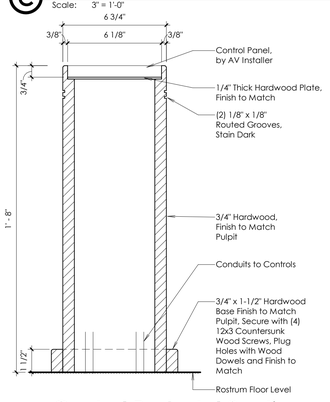

E Control Pedestal Section

Scale: 3" = 1'-0"

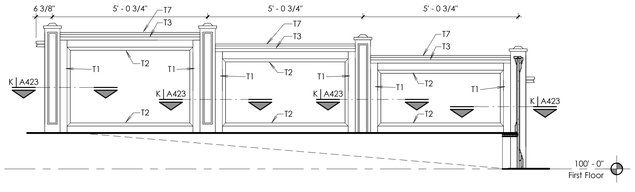

G Rostrum Ramp Panel Inside

Scale: 1/2" = 1'-0"

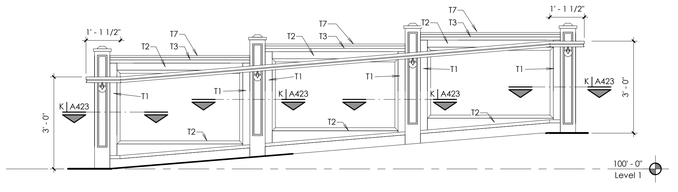

H Rostrum Ramp Panel

Scale: 1/2" = 1'-0"

bhd ARCHITECTS
www.bhdarchitects.com
Phone 801.571.0010
Fax 801.571.0303
Toll Free 888.571.0010
65 East Wadsworth Park Drive
Suite 205 Draper, Utah 84020

LICENSED ARCHITECT
Lafe Theodore Harris
15 Aug 2024
6736878-0301
STATE OF UTAH

THE CHURCH OF JESUS CHRIST OF LATTER-DAY SAINTS

Orem YSA 3rd 10 Ward Building
Orem UT YSA 3rd Stake

Approx. 1700 West 575 South
Vineyard, Utah 84059

Owner #: 590-1878
Plan Series: 2024 10 Ward S-C
County Parcel: 37-228-0001
BHD #: 2344
Date: 15 Aug 2024

Drawing Issue and Revision Schedule

#	Date	Description
1	15 Aug 2024	Bid Drawings

Rostrum Casework Details

A421

8/19/2024 8:07:50 AM

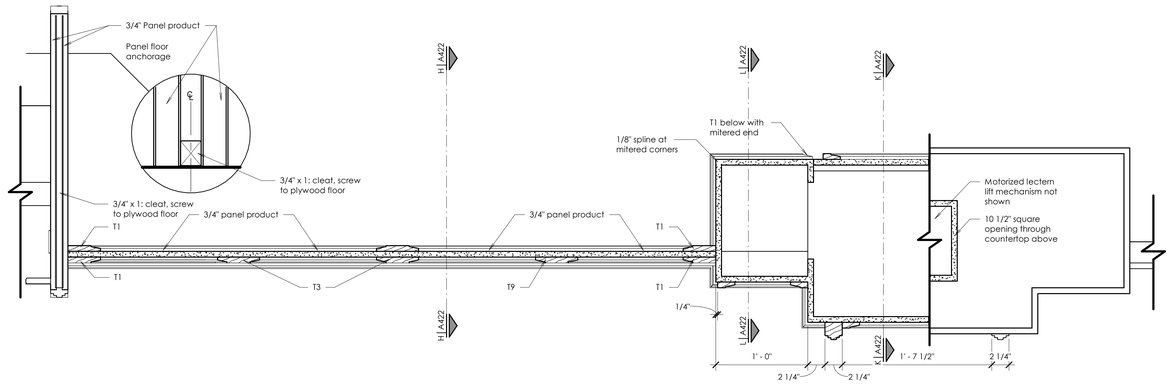

A Pulpit and Modesty Rail Wall

Scale: 1 1/2" = 1'-0"

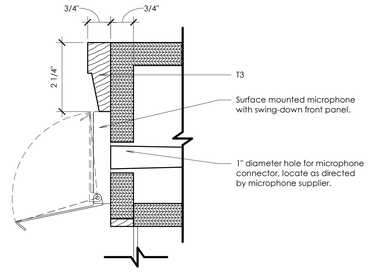

B Sacrament Trim

Scale: 6" = 1'-0"

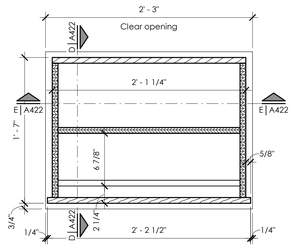

C Pull-Out Step

Scale: 1 1/2" = 1'-0"

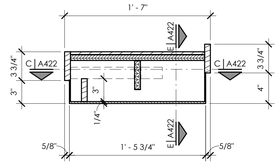

D Pull-Out Step Side

Scale: 1 1/2" = 1'-0"

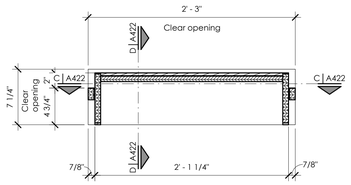

E Pull-Out Step Front

Scale: 1 1/2" = 1'-0"

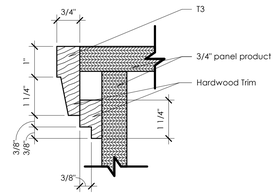

F Lectern Edge

Scale: 6" = 1'-0"

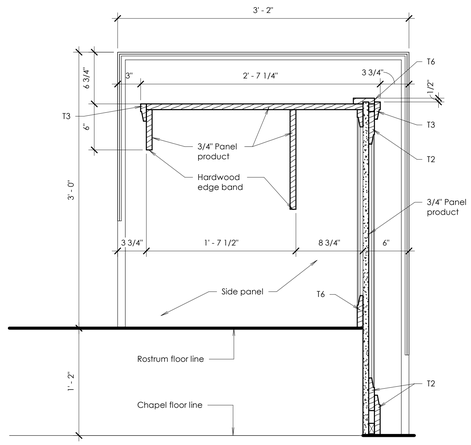

G Sacrament Table

Scale: 1 1/2" = 1'-0"

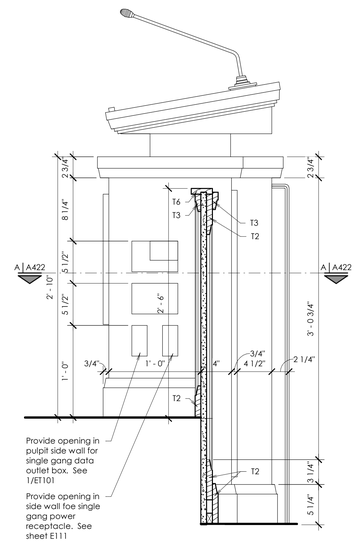

H Modesty Wall

Scale: 1 1/2" = 1'-0"

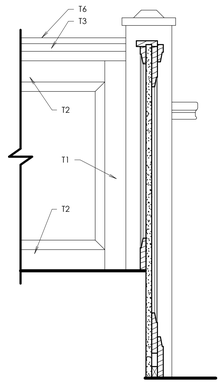

J Modesty Wall

Scale: 1 1/2" = 1'-0"

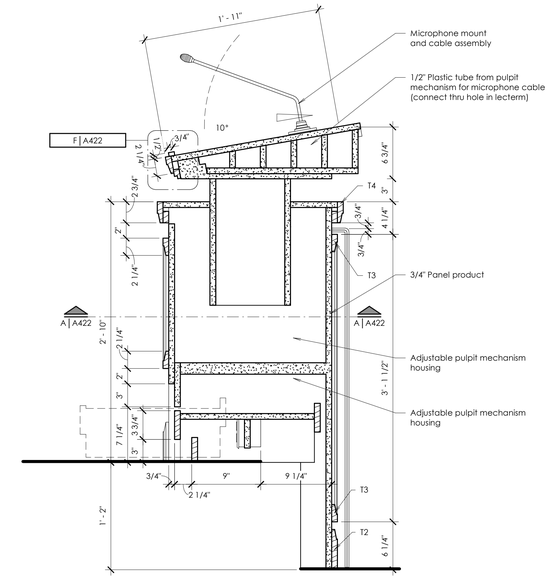

K Pulpit

Scale: 1 1/2" = 1'-0"

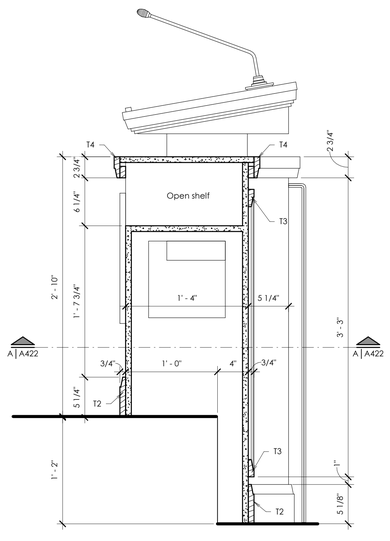

L Pulpit

Scale: 1 1/2" = 1'-0"

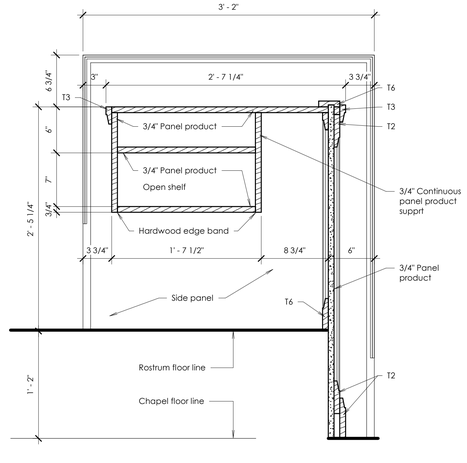

M Sacrament Table

Scale: 1 1/2" = 1'-0"

bhd ARCHITECTS
www.bhdarchitects.com
Phone 801.571.0010
Fax 801.571.0303
Toll Free 888.571.0010
65 East Wadsworth Park Drive
Suite 205 Draper, Utah 84020

LICENSED ARCHITECT Lafe Theodore Harris 15 Aug 2024 7738896-0301 STATE OF UTAH

THE CHURCH OF JESUS CHRIST OF LATTER-DAY SAINTS

Orem YSA 3rd 10 Ward Building
Orem UT YSA 3rd Stake

Approx 1700 West 575 South
Vineyard, Utah 84059

Owner #: 390-1876
Plan Series: 2024 10 Ward SC
County Parcel: 37-228:0001
BID #: 2344
Date: 15 Aug 2024

Drawing Issue and Revision Schedule

#	Date	Description
1	15 Aug 2024	Bid Drawings

Rostrum Casework Details

A422

Printed 8/19/2024 5:15:26 PM

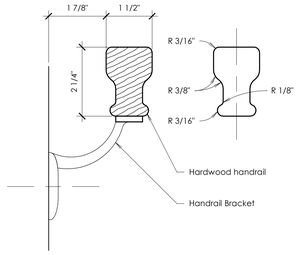

Ⓒ Handrail Section

Scale: 6" = 1'-0"

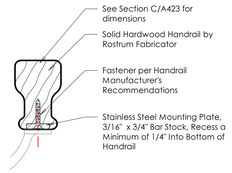

Ⓓ Typical Handrail Detail

Scale: 6" = 1'-0"

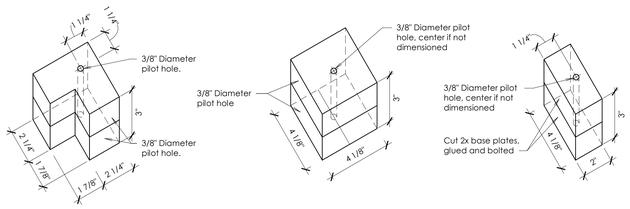

Ⓙ Chapel Newel Post Isomtrics

Scale: 3" = 1'-0"

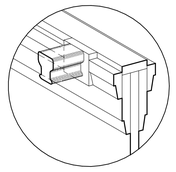

Ⓚ Handrail Return

Scale: 12" = 1'-0"

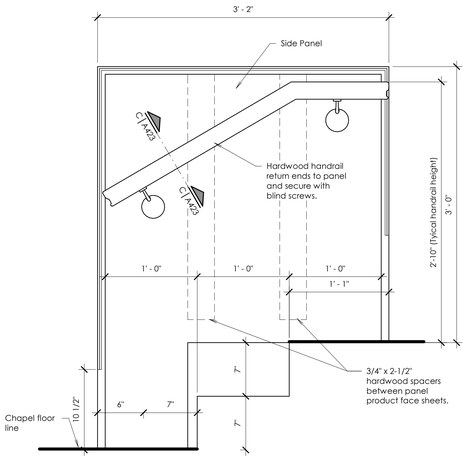

Ⓜ Rostrum Steps Side Panel

Scale: 1 1/2" = 1'-0"

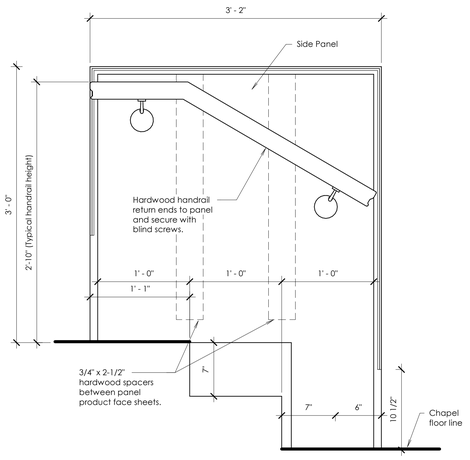

Ⓝ Rostrum Steps Side Panel

Scale: 1 1/2" = 1'-0"

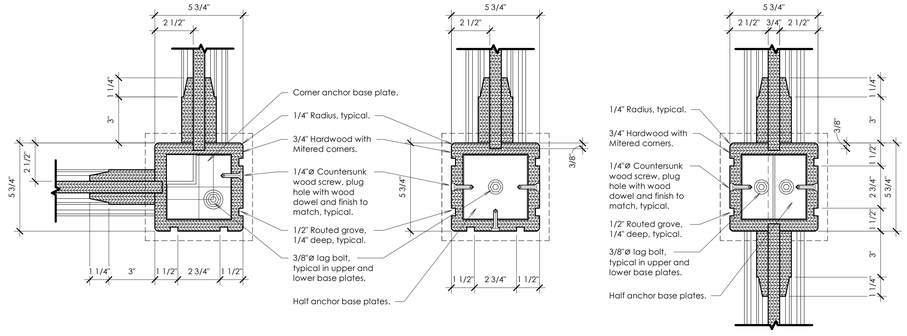

Ⓛ Newel Post Types

Scale: 3" = 1'-0"

bhd ARCHITECTS
www.bhdarchitects.com
Phone 801.571.0010
Fax 801.571.0303
Toll Free 888.571.0010
65 East Wadsworth Park Drive
Suite 205 Draper, Utah 84020

LICENSED ARCHITECT
Lafe Theodore Harris
15 Aug 2024
STATE OF UTAH

THE CHURCH OF JESUS CHRIST OF LATTER-DAY SAINTS

Orem YSA 3rd 10 Ward Building
Orem UT YSA 3rd Stake

Approx. 1700 West 575 South
Vineyard, Utah 84059

Date: 13 Aug 2024
BHD #: 2344
County Parcel: 59:220:0001
Plan Series: 2024 10 Ward SC
Owner #: 590-18-6

Drawing Issue and Revision Schedule		
#	Date	Description
1	15 Aug 2024	Bid Drawings

Rostrum Stair & Ramp Details

A423

Printed 8/19/2024 5:18:40 PM

General Notes

A. All exterior walls shall be 2-hour fire rated and non-combustible construction. Non-combustible construction shall be achieved by fire-retardant treated lumber, and for SCL / LVL-type lumber, intumescent paint treatment. These requirements are from the foundation wall up to the bottom of the roof structure. Walls above the beginning of the roof structure at that wall are not required to meet this requirement. Walls with bumpouts shall be part of the 2-hour rated assembly and of non-combustible construction. The construction parameters for this requirement are shown on A105.

Keyed Notes

04-1	Manufactured Stone Veneer System.
04-2	Brick veneer field course. Brick Type#1.
04-4	Manufactured stone veneer capstone.
04-5	Brick veneer stacked course. Brick Type #2.
04-8	Extend adjacent material behind manufactured stone veneer. Cut manufactured stone veneer in a straight line with a 1/4" gap to adjacent material. Install backer rod and sealant.
06-6	Wall Sheathing, See Structural Drawings.
06-23	Solid Surface Window Stool.
06-40	3/4" window bucks for vinyl window flange attachment.
06-51	2-hour fire rated and non-combustible exterior wall assembly. See 1 & 2/A105 and General Note 4/A105.
07-3	1" Extruded Polystyrene Board Insulation.
07-27	Prefinished Metal Downspout. Typical. See H/A502.
08-7	Aluminum Storefront Door. Refer to Door Schedule and Details.
08-8	Vinyl Framed Window. Refer to Window Elevations A601.
08-12	Aluminum storefront spandrel glass windows. See enlarged elevations, Window Schedule, and A612.
09-20	(2) layers of 5/8" Type X gypsum board on the interior side of all exterior walls up to roof level. Install continuous sheet vapor retarder between gypsum board and wall studs. Seal vapor retarder air tight.
09-27	1/2" exterior-grade gypsum sheathing at all exterior walls. Install air barrier on top of gypsum sheathing.
09-44	Cement backer board.

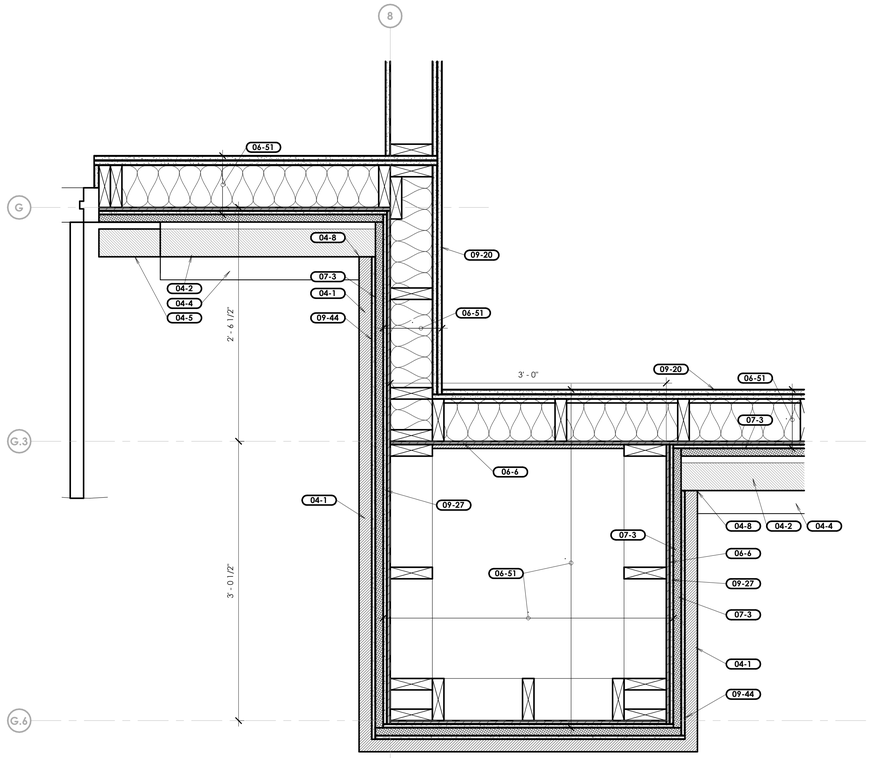

1 Entry Column Detail

Scale: 1 1/2" = 1'-0"

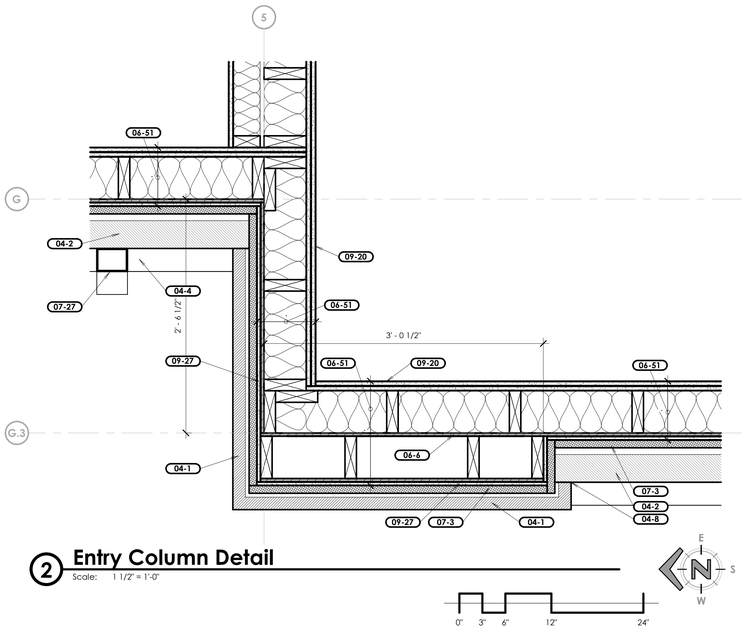

2 Entry Column Detail

Scale: 1 1/2" = 1'-0"

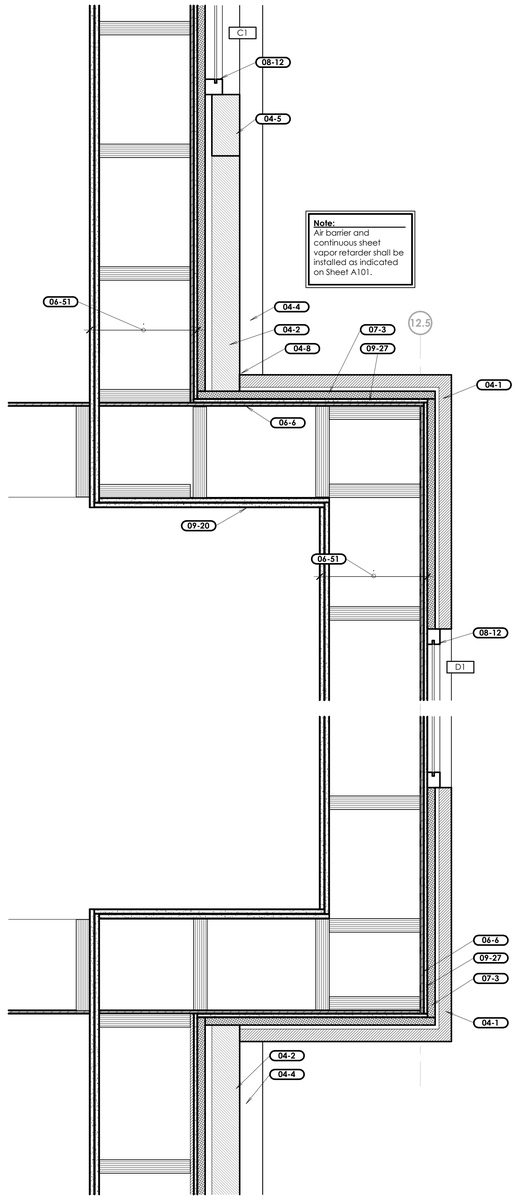

4 Steeple Base Detail

Scale: 1 1/2" = 1'-0"

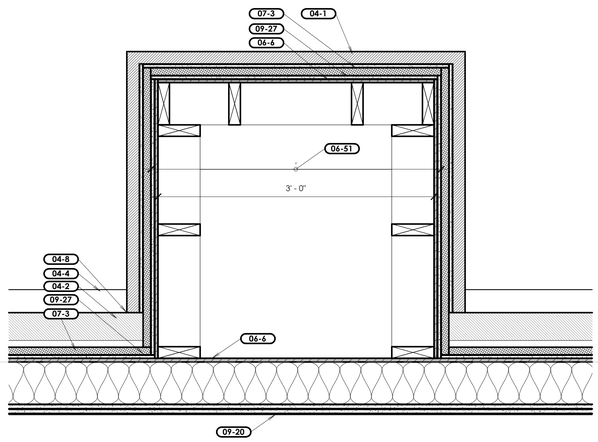

3 Engaged Column Detail

Scale: 1 1/2" = 1'-0"

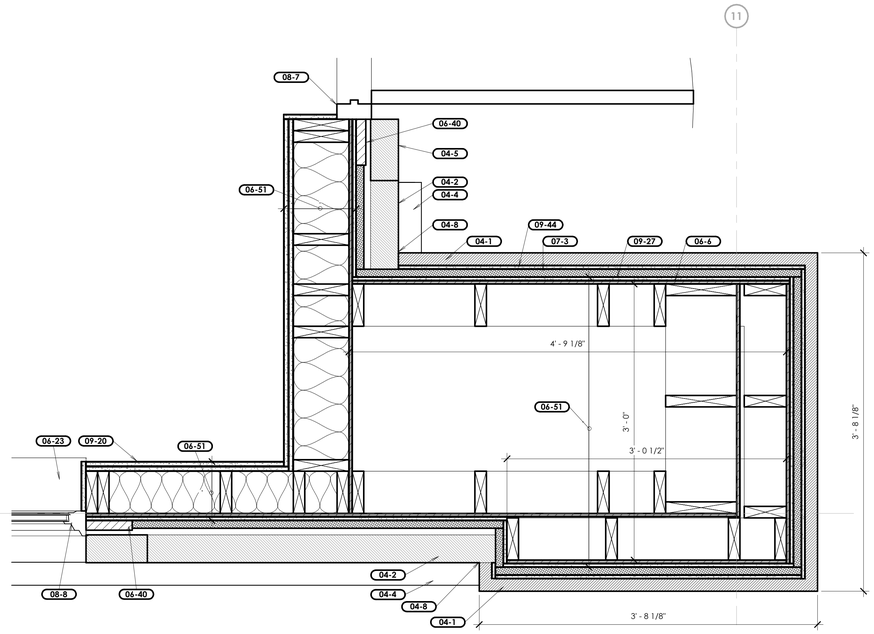

5 Wall Feature Detail

Scale: 1 1/2" = 1'-0"

bhd ARCHITECTS
www.bhdarchitects.com
Phone 801.571.0010
Fax 801.571.0303
Toll Free 888.571.0010
65 East Wadsworth Park Drive
Suite 205 Draper, Utah 84020

LICENSED ARCHITECT
Lafe Theodore Harris
15 Aug 2024
6758878-0301
STATE OF UTAH

THE CHURCH OF JESUS CHRIST OF LATTER-DAY SAINTS

Orem YSA 3rd 10 Ward Building
Orem UT YSA 3rd Stake

Approx. 1700 West 575 South
Vineyard, Utah 84059

Owner #: 590-1876
Plan Series: 2024 10 Ward SFC
County Parcel: 59:226:0001
BIID #: 2344
Date: 15 Aug 2024

Drawing Issue and Revision Schedule		
#	Date	Description
1	15 Aug 2024	Bid Drawings

Plan Details

A501

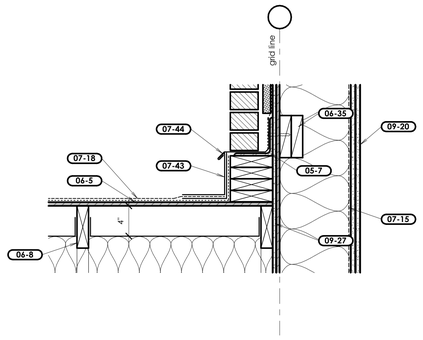

A Headwall Flashing Detail

Scale: 1 1/2" = 1'-0"

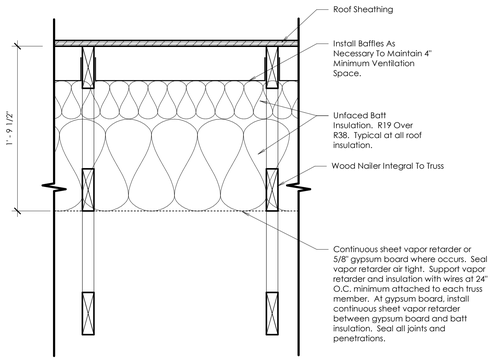

B Typical Insulation Detail

Scale: 1 1/2" = 1'-0"

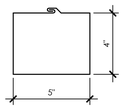

H Downspout

Scale: 3" = 1'-0"

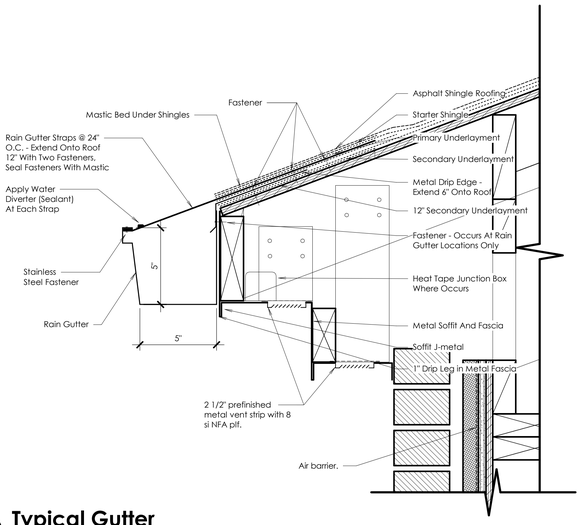

J Typical Gutter

Scale: 3" = 1'-0"

Keyed Notes

- 04-1 Manufactured Stone Veneer System.
- 04-2 Brick veneer field course. Brick Type#1.
- 04-3 Brick veneer soldier course. Brick Type #2.
- 04-5 Brick veneer stacked course. Brick Type #2.
- 04-7 4" CMU block.
- 05-7 Steel lintel. See Structural Sheets.
- 06-5 Roof Sheathing. See Structural Drawings.
- 06-8 Roof framing. See Structural Sheets.
- 06-21 Hardwood chair rail. See B/A705. At windows, see A/A705.
- 06-23 Solid Surface Window Stool.
- 06-35 Blocking for lintel.
- 06-36 Outlooker blocking with ventilation holes. See Structural Sheets.
- 06-37 Truss blocking. Top chord shall have ventilation opening. See Structural Sheets.
- 06-38 2x6 fascia framing.
- 06-39 2x4 fascia framing.
- 06-40 3/4" window bucks for vinyl window flange attachment.
- 06-42 Shaped 2x10 outlooker. See Structural Sheets.
- 06-63 Overbuild framing. See Structural Sheets.
- 07-2 Plastic Sheet Air Barrier.
- 07-3 1" Extruded Polystyrene Board Insulation.
- 07-6 Fiberglass batt roof insulation. See B/A502.
- 07-13 Corrugated plastic baffle with 4" ventilation space above.
- 07-14 Prefinished metal flashing.
- 07-15 Vapor Retarder Membrane. Seal Air Tight. See B/A502.
- 07-18 Asphalt shingle roofing over underlayments. Install secondary underlayment over the entire roof.
- 07-23 Metal Drip Edge Flashing. See J/A502.
- 07-24 Metal Soffit Panels.
- 07-25 Prefinished Metal Fascia. See J/A502.
- 07-26 Prefinished Metal Rain Gutter. See Detail J/A502.
- 07-39 Fill entire cavity with insulation. At roof locations, leave 4" ventilation space to deck. Install baffles as necessary to maintain ventilation space.
- 07-40 Prefinished metal fascia return. See A & B/A503.
- 07-43 Prefinished metal flashing over stepped flashing. 6" high typical.
- 07-44 Prefinished metal flashing with weep vents at brick.
- 07-46 Prefinished metal vent strip.
- 07-47 Window flashing.
- 08-8 Vinyl Framed Window, Refer to Window Elevations A601.
- 08-11 Install flashing below window on a 1/4" slope. Shim window up as necessary for window weep vents to drain over the top of the window flashing.
- 09-16 Sisal Wall Covering.
- 09-20 (2) layers of 5/8" Type X gypsum board on the interior side of all exterior walls up to roof level. Install continuous sheet vapor retarder between gypsum board and wall studs. Seal vapor retarder air tight.
- 09-27 1/2" exterior-grade gypsum sheathing at all exterior walls. Install air barrier on top of gypsum sheathing.

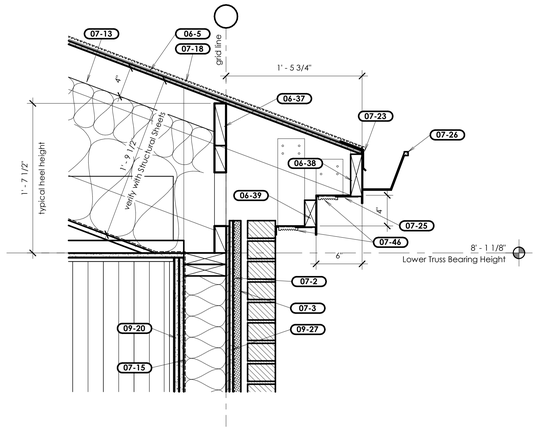

C Fascia Detail - Typical

Scale: 1 1/2" = 1'-0"

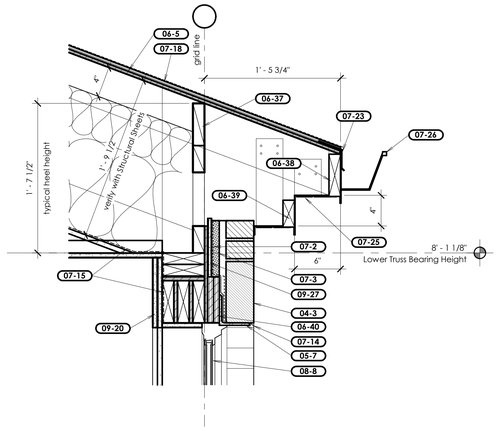

D Fascia and Window Head Detail

Scale: 1 1/2" = 1'-0"

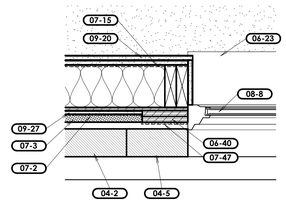

F Window Jamb Detail

Scale: 1 1/2" = 1'-0"

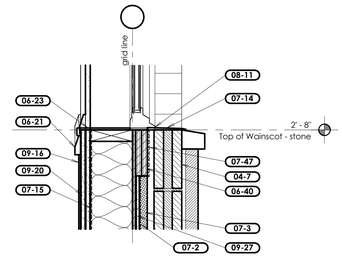

G Window Sill Detail

Scale: 1 1/2" = 1'-0"

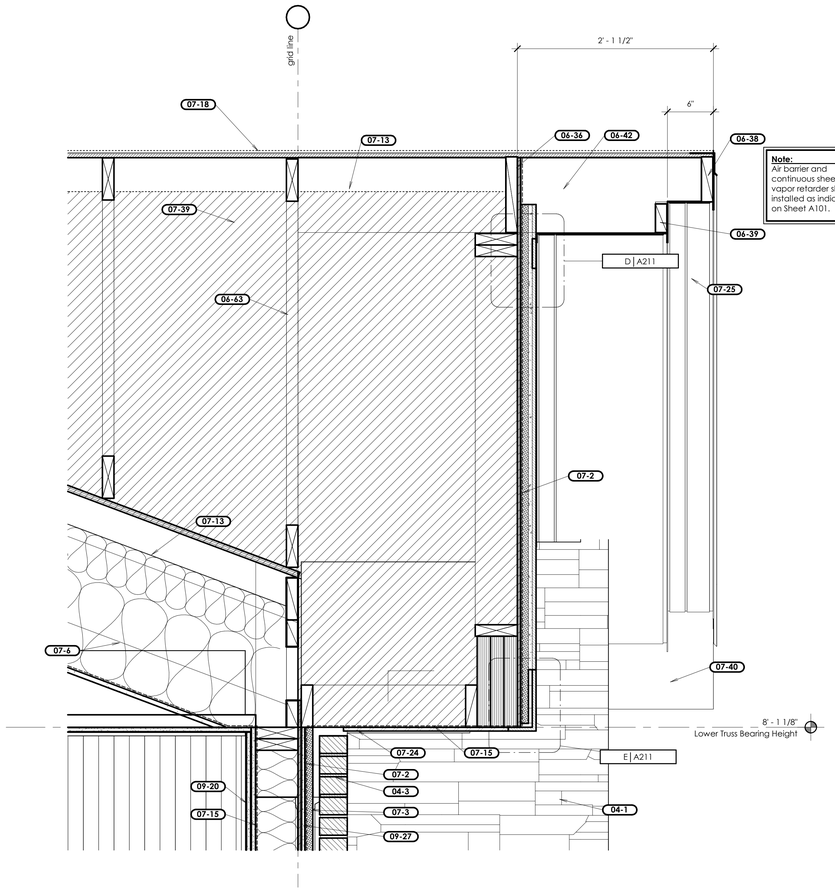

E Typical Overbuild Detail

Scale: 1 1/2" = 1'-0"

bhd ARCHITECTS
www.bhdarchitects.com
Phone 801.571.0010
Fax 801.571.0303
Toll Free 888.571.0010
65 East Wadsworth Park Drive
Suite 205 Draper, Utah 84020

LICENSED ARCHITECT Lafe Theodore Harris 15 Aug 2024 6758878-0301 STATE OF UTAH

THE CHURCH OF JESUS CHRIST OF LATTER-DAY SAINTS

Orem YSA 3rd 10 Ward Building
Orem UT YSA 3rd Stake

Approx. 1700 West 575 South
Vineyard, Utah 84059

Owner #: 390-1876
Plan Series: 2024 10 Ward SC
County Parcel: 59:228:0301
BID #: 2344
Date: 15 Aug 2024

Drawing Issue and Revision Schedule

#	Date	Description
1	15 Aug 2024	Bid Drawings

Exterior Details

A502

Printed 8/19/2024 9:16:45 PM

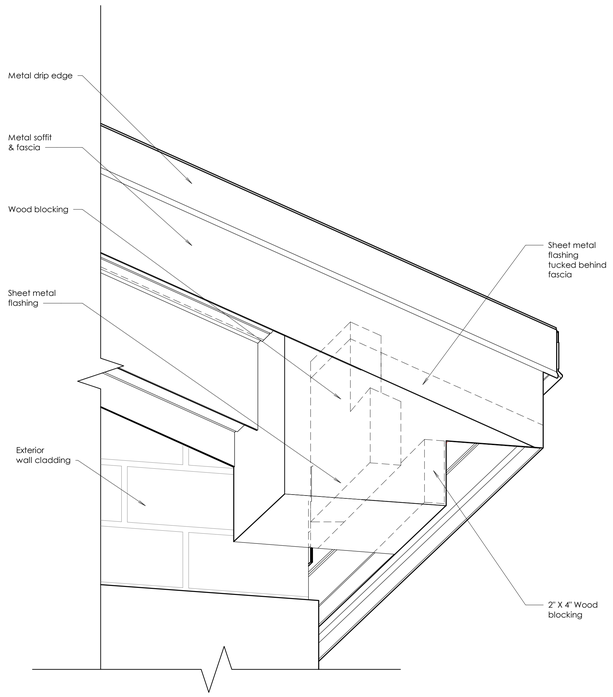

A Typical Fascia Return

Not to Scale

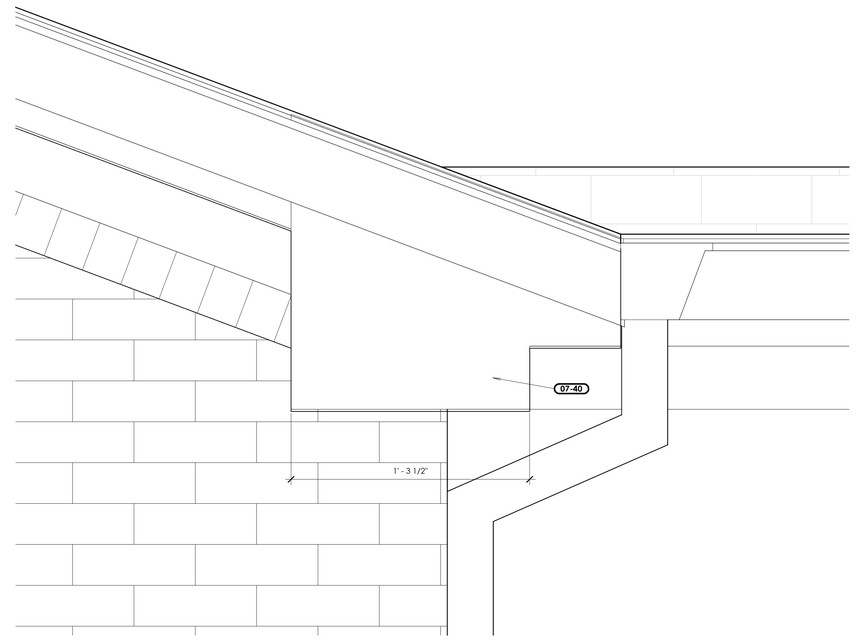

B Typical Fascia Return

Scale: 3" = 1'-0"

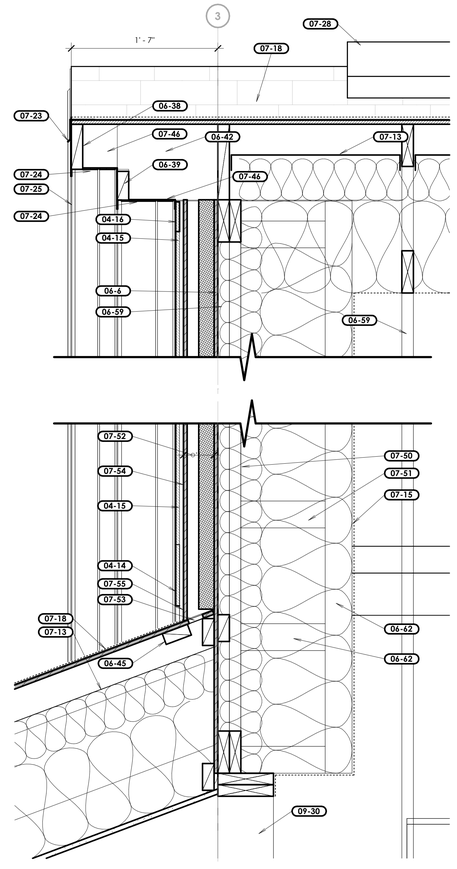

C Rear Gable Ventilation and Flashing Detail

Scale: 1 1/2" = 1'-0"

Keyed Notes

04-14	Thin brick veneer soldier course. Brick Type #2. See C/A503.
04-15	Thin brick veneer field course. Brick Type #1. See F/A211.
04-16	Thin brick veneer rowlock course. Brick Type #2. See D/A211.
06-6	Wall Sheathing. See Structural Drawings.
06-38	2x6 fascia framing.
06-39	2x4 fascia framing.
06-42	Shaped 2x10 outlooker. See Structural Sheets.
06-45	2x4 blocking.
06-59	Trussed rafters. See Structural Sheets.
06-62	2x4 framing at 16" o.c. for installation of the insulation.
07-13	Corrugated plastic baffle with 4" ventilation space above.
07-15	Vapor Retarder Membrane. Seal Air Tight. See B/A502.
07-18	Asphalt shingle roofing over underlayments. Install secondary underlayment over the entire roof.
07-23	Metal Drip Edge Flashing. See J/A502.
07-24	Metal Soffit Panels.
07-25	Prefinished Metal Fascia. See J/A502.
07-28	Prefinished metal ridge vent. See F/A122.
07-40	Prefinished metal fascia return. See A & B/A503.
07-46	Prefinished metal vent strip.
07-50	R-19 batt insulation. See B/A502 sim.
07-51	R-38 batt insulation. See B/A502 sim.
07-52	Vented insulation panel with 1/2" sheathing, 1 1/2" ventilation space, and 2" rigid insulation. Ventilation space shall communicate air freely between the trusses below and the rake framing above.
07-53	(5) 2" diameter holes in sheathing per truss space.
07-54	Weather resistive barrier over sheathing.
07-55	Install flashing over counter flashing behind cement backer board and brick.
09-30	Wall framing with safety railing. Typical at all wall framing adjacent to lay-in ceilings or other ceilings with no floor framing or sheathing. See Structural Sheets and C/A314.

bhd ARCHITECTS
www.bhdarchitects.com
Phone 801.571.0010
Fax 801.571.0303
Toll Free 888.571.0010
65 East Wadsworth Park Drive
Suite 205 Draper, Utah 84020

LICENSED ARCHITECT Lafe Theodore Harris 15 Aug 2024 6768878-0301 STATE OF UTAH

THE CHURCH OF JESUS CHRIST OF LATTER-DAY SAINTS

Orem YSA 3rd 10 Ward Building
Orem UT YSA 3rd Stake

Approx. 1700 West 575 South
Vineyard, Utah 84059

Date: 15 Aug 2024
BHD #: 2344
County Parcel: 37-228-0001
Plan Series: 2024 10 Wards SIC
Owner #: 590-1876

Drawing Issue and Revision Schedule		
#	Date	Description
1	15 Aug 2024	Bid Drawings

Roof Details

A503

Printed: 8/19/2024 9:21:42 PM

Keyed Notes

06-5	Roof Sheathing. See Structural Drawings.
06-8	Roof framing. See Structural Sheets.
07-13	Corrugated plastic baffle with 4" ventilation space above.
07-15	Vapor Retarder Membrane. Seal Air Tight. See B/A502.
09-2	Interior 5/8" Type X Gypsum Board.
09-29	Metal ceiling framing. See Reflected Ceiling Plan.

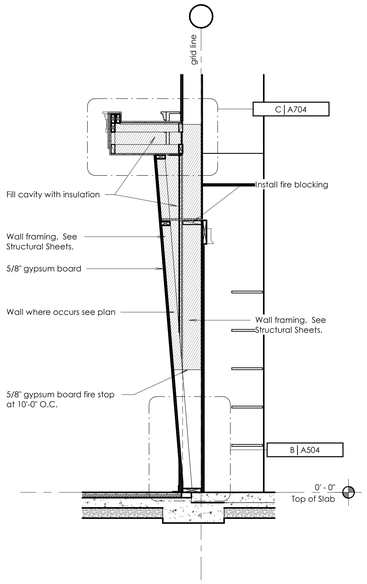

A Sloped Wall Detail

Scale: 1/2" = 1'-0"

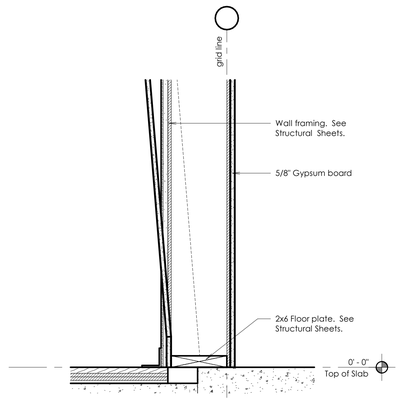

B Sloped Wall Detail

Scale: 1 1/2" = 1'-0"

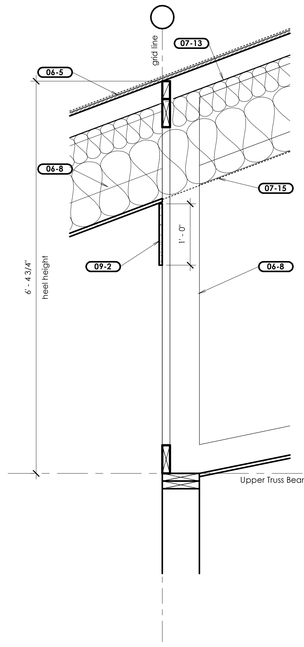

C Truss Heel Detail

Scale: 1" = 1'-0"

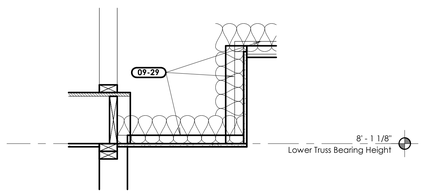

D Ceiling Detail

Scale: 1" = 1'-0"

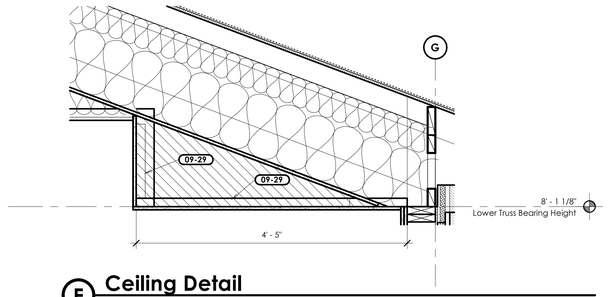

E Ceiling Detail

Scale: 1" = 1'-0"

bhd ARCHITECTS
www.bhdarchitects.com
Phone 801.571.0010
Fax 801.571.0303
Toll Free 888.571.0010
65 East Wadsworth Park Drive
Suite 205 Draper, Utah 84020

LICENSED ARCHITECT
Lafe Theodore Harris
15 Aug 2024
7738896-0301
STATE OF UTAH

THE CHURCH OF JESUS CHRIST OF LATTER-DAY SAINTS

Orem YSA 3rd 10 Ward Building
Orem UT YSA 3rd Stake

Approx. 1700 West 575 South
Vineyard, Utah 84059

Date: 13 Aug 2024
BHD #: 2344
County Parcel: 59-228-0001
Plan Series: 2024 10 Ward-SC
Owner #: 590-18-8

Drawing Issue and Revision Schedule

#	Date	Description
1	13 Aug 2024	Bid Drawings

Miscellaneous Interior Details

A504

Printed 8/19/2024 5:34:02 PM

General Notes

A. All exterior walls shall be 2-hour fire rated and non-combustible construction. Non-combustible construction shall be achieved by fire-retardant treated lumber, and for SCL / LVL-type lumber, intumescent paint treatment. These requirements are from the foundation wall up to the bottom of the roof structure. Walls above the beginning of the roof structure at that wall are not required to meet this requirement. Walls with bumpouts shall be part of the 2-hour rated assembly and of non-combustible construction. The construction parameters for this requirement are shown on A105.

Keyed Notes

04-1	Manufactured Stone Veneer System.
04-2	Brick veneer field course. Brick Type#1.
04-4	Manufactured stone veneer capstone.
04-5	Brick veneer stacked course. Brick Type #2.
04-8	Extend adjacent material behind manufactured stone veneer. Cut manufactured stone veneer in a straight line with a 1/4" gap to adjacent material. Install backer rod and sealant.
06-6	Wall Sheathing, See Structural Drawings.
06-23	Solid Surface Window Stool.
06-40	3/4" window bucks for vinyl window flange attachment.
06-51	2-hour fire rated and non-combustible exterior wall assembly. See 1 & 2/A105 and General Note 4/A105.
07-3	1" Extruded Polystyrene Board Insulation.
07-27	Prefinished Metal Downspout. Typical. See H/A502.
08-7	Aluminum Storefront Door. Refer to Door Schedule and Details.
08-8	Vinyl Framed Window. Refer to Window Elevations A601.
08-12	Aluminum storefront spandrel glass windows. See enlarged elevations, Window Schedule, and A612.
09-20	(2) layers of 5/8" Type X gypsum board on the interior side of all exterior walls up to roof level. Install continuous sheet vapor retarder between gypsum board and wall studs. Seal vapor retarder air tight.
09-27	1/2" exterior-grade gypsum sheathing at all exterior walls. Install air barrier on top of gypsum sheathing.
09-44	Cement backer board.

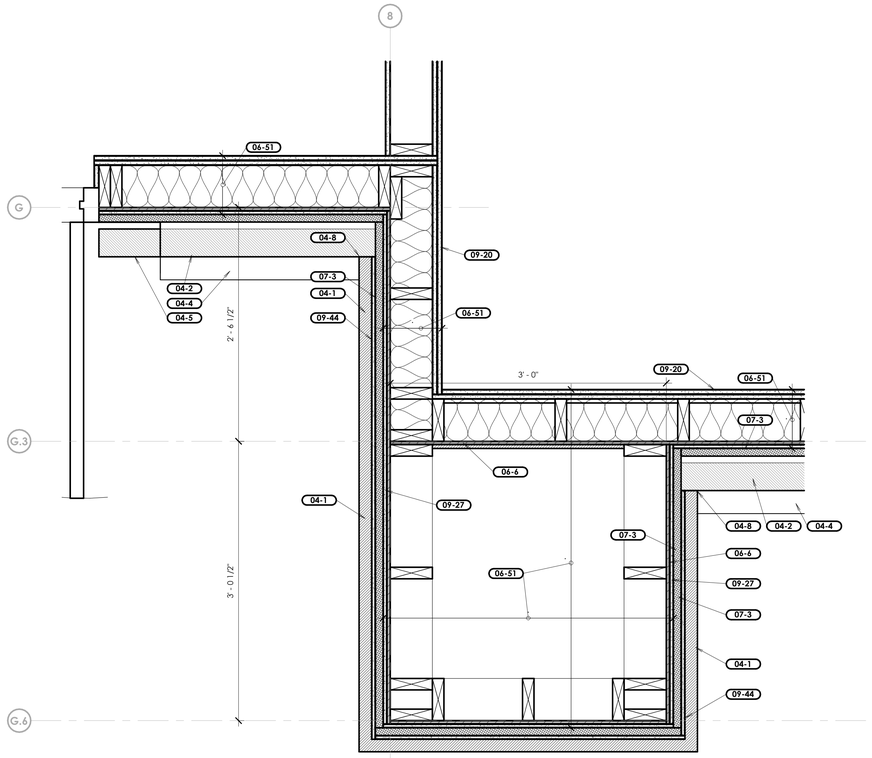

1 Entry Column Detail
Scale: 1 1/2" = 1'-0"



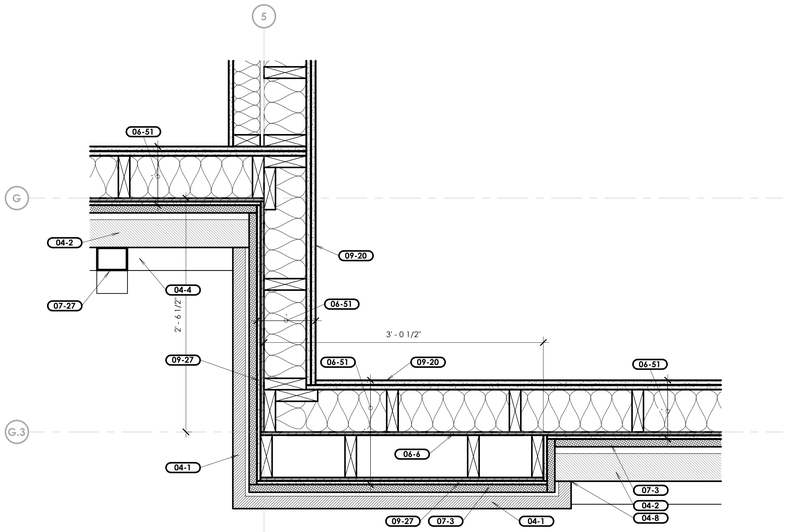

2 Entry Column Detail
Scale: 1 1/2" = 1'-0"

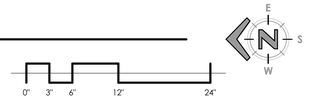

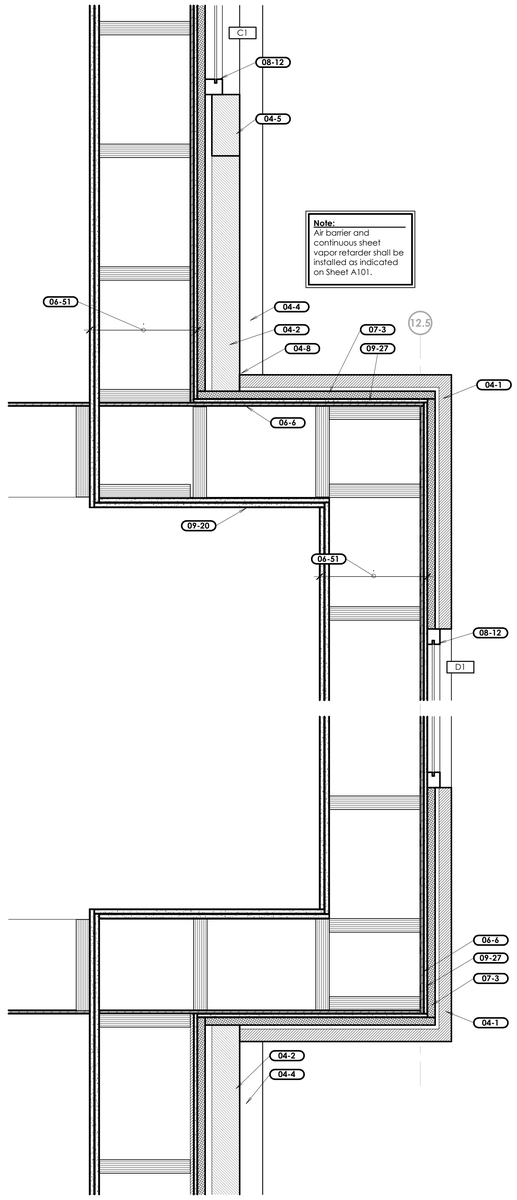

4 Steeple Base Detail
Scale: 1 1/2" = 1'-0"

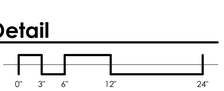

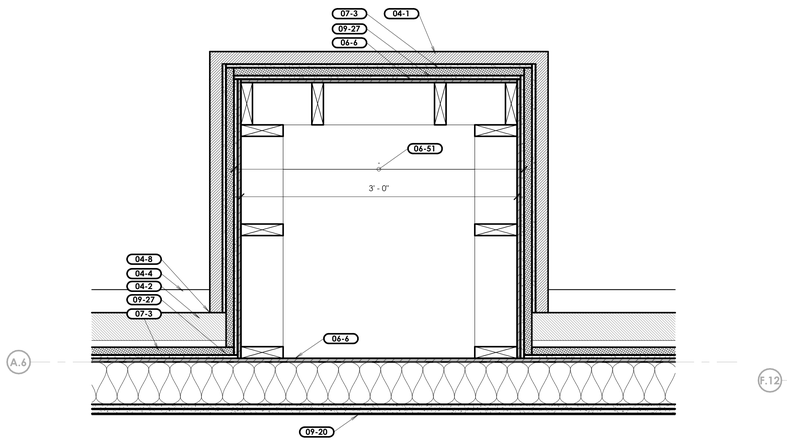

3 Engaged Column Detail
Scale: 1 1/2" = 1'-0"



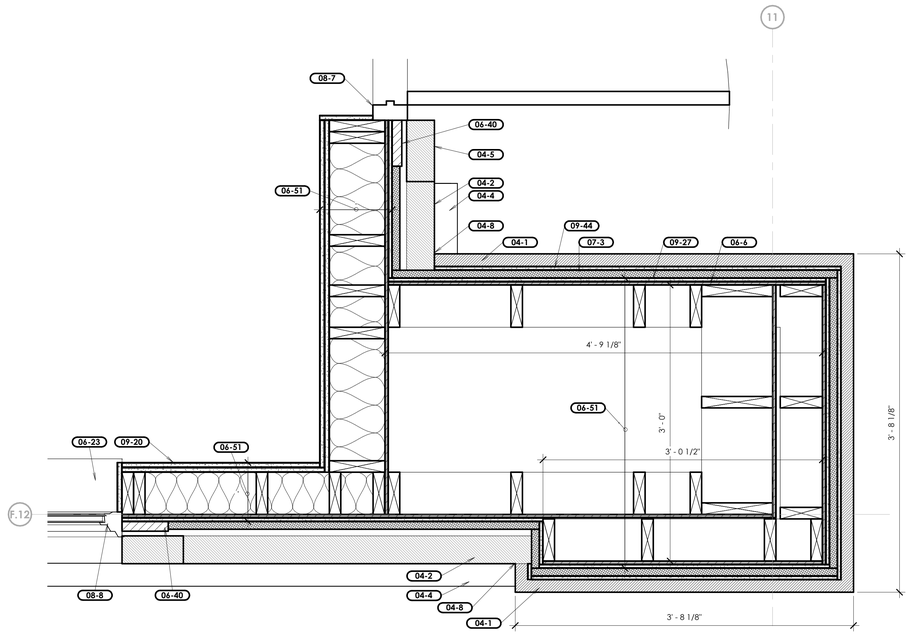

5 Wall Feature Detail
Scale: 1 1/2" = 1'-0"



bhd ARCHITECTS
www.bhdarchitects.com
Phone 801.571.0010
Fax 801.571.0303
Toll Free 888.571.0010
65 East Wadsworth Park Drive
Suite 205 Draper, Utah 84020

LICENSED ARCHITECT
Lafe Theodore Harris
15 Aug 2024
7973878-0301
STATE OF UTAH

THE CHURCH OF JESUS CHRIST OF LATTER-DAY SAINTS

Orem YSA 3rd 10 Ward Building
Orem UT YSA 3rd Stake

Approx. 1700 West 575 South
Vineyard, Utah 84059

Date: 15 Aug 2024
BIID #: 2344
County Parcel: 59-226-0001
Plan Series: 2024 10 Ward SC
Owner #: 590-1876

Drawing Issue and Revision Schedule

#	Date	Description
1	15 Aug 2024	Bid Drawings

Plan Details

A501

Printed: 8/19/2024 9:02:54 PM

Glazing Schedule

1	Low-E, Obscure Insulated Panel
2	Low-E, Insulated Panel
3	1/4" Float Glass
T	Tempered
S	Spandrel

Keyed Notes

04-1	Manufactured Stone Veneer System.
04-2	Brick veneer field course. Brick Type#1.
04-3	Brick veneer soldier course. Brick Type #2.
04-4	Manufactured stone veneer capstone.
04-5	Brick veneer stacked course. Brick Type #2.

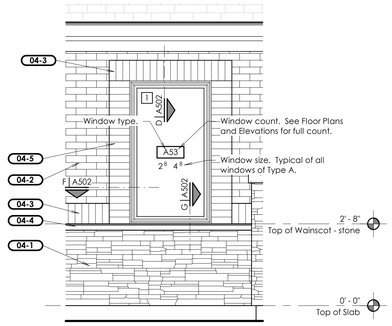

A Window Type A - Vinyl Window Elevation

Scale: 1/2" = 1'-0"

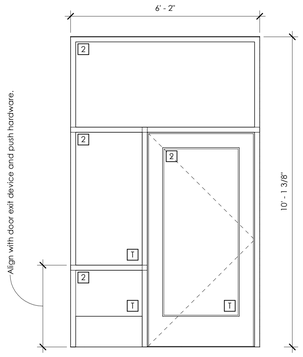

B Exterior Storefront Elevation

Scale: 1/2" = 1'-0"

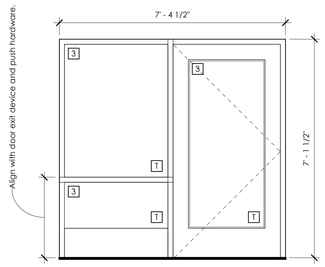

C Interior Storefront Elevation

Scale: 1/2" = 1'-0"

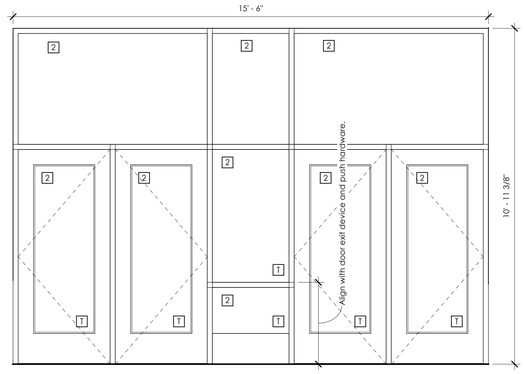

D Exterior Entrance Aluminum Storefront Elevation

Scale: 1/2" = 1'-0"

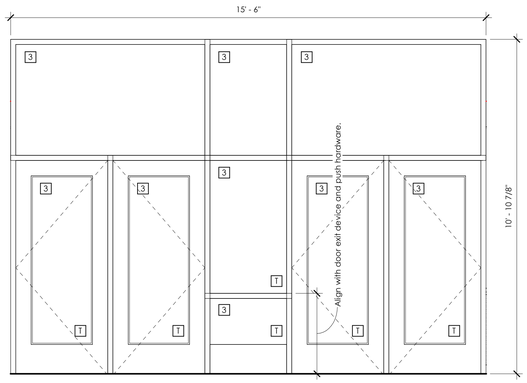

E Vestibule Aluminum Storefront Elevation

Scale: 1/2" = 1'-0"

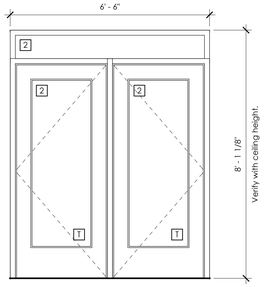

F Exterior Entrance Aluminum Storefront Elevation

Scale: 1/2" = 1'-0"

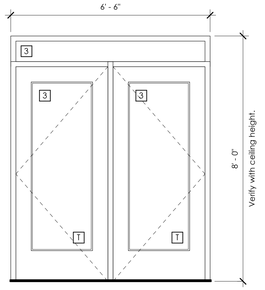

G Vestibule Aluminum Storefront Elevation

Scale: 1/2" = 1'-0"

Window Schedule

Type Mark	Description	Width	Height	Elevation Detail	Head Detail	Jamb Detail	Sill Detail	Count	Comments
A	Vinyl Window	2' - 8"	4' - 8"	4/A203 and A/A601	D/A502	F/A502	G/A502	61	
B	Aluminum Storefront Window	7' - 0"	12' - 11"	1/A205	G/A612	H/A612	J/A612	2	
C	Aluminum Storefront Window	3' - 8"	21' - 4"	1/A203	A/A612	B/A612	C/A612	2	
D	Aluminum Storefront Window	3' - 8"	26' - 7 1/4"	1/A203	D/A612	E/A612	F/A612	1	

bhd ARCHITECTS
www.bhdarchitects.com
Phone 801.571.0010
Fax 801.571.0303
Toll Free 888.571.0010
65 East Wadsworth Park Drive
Suite 205 Draper, Utah 84020

LICENSED ARCHITECT
Lafe Theodore Harris
15 Aug 2024
7738896-0301
STATE OF UTAH

THE CHURCH OF JESUS CHRIST OF LATTER-DAY SAINTS

Orem YSA 3rd 10 Ward Building
Orem UT YSA 3rd Stake

Approx. 1700 West 575 South
Vineyard, Utah 84059

Date: 15 Aug 2024
BHD #: 2344
County Parcel: 37-228-0001
Plan Series: 2024 10 Ward S.C.
Owner #: 590-1878

Drawing Issue and Revision Schedule

#	Date	Description
1	15 Aug 2024	Bid Drawings

Exterior Window Types, Storefront Types, and Window Schedule

A601

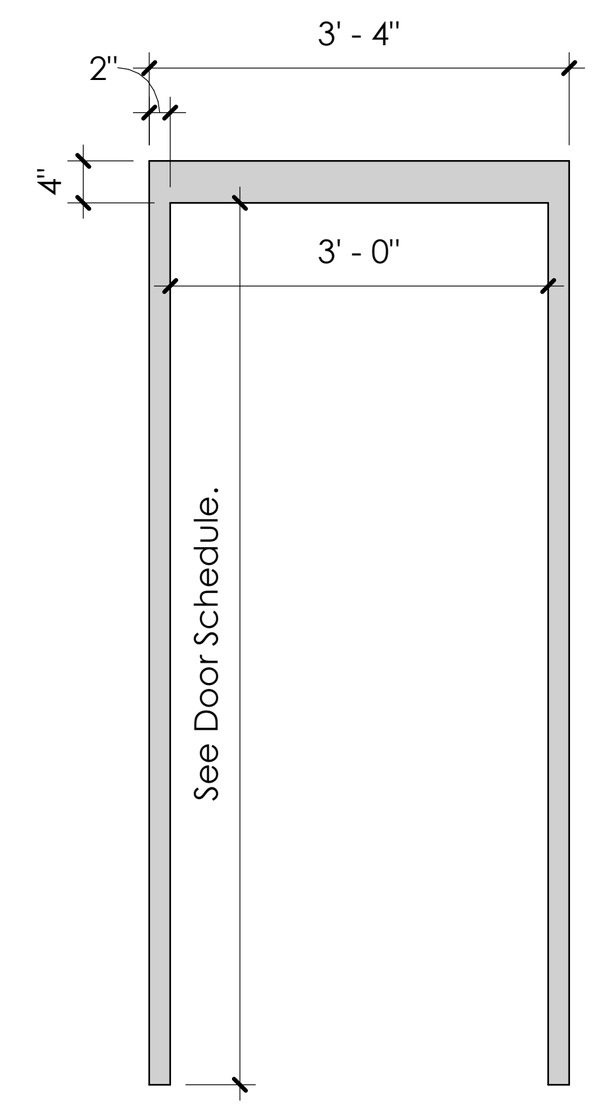

① Exterior Aluminum Frame
Scale: 1/2" = 1'-0"

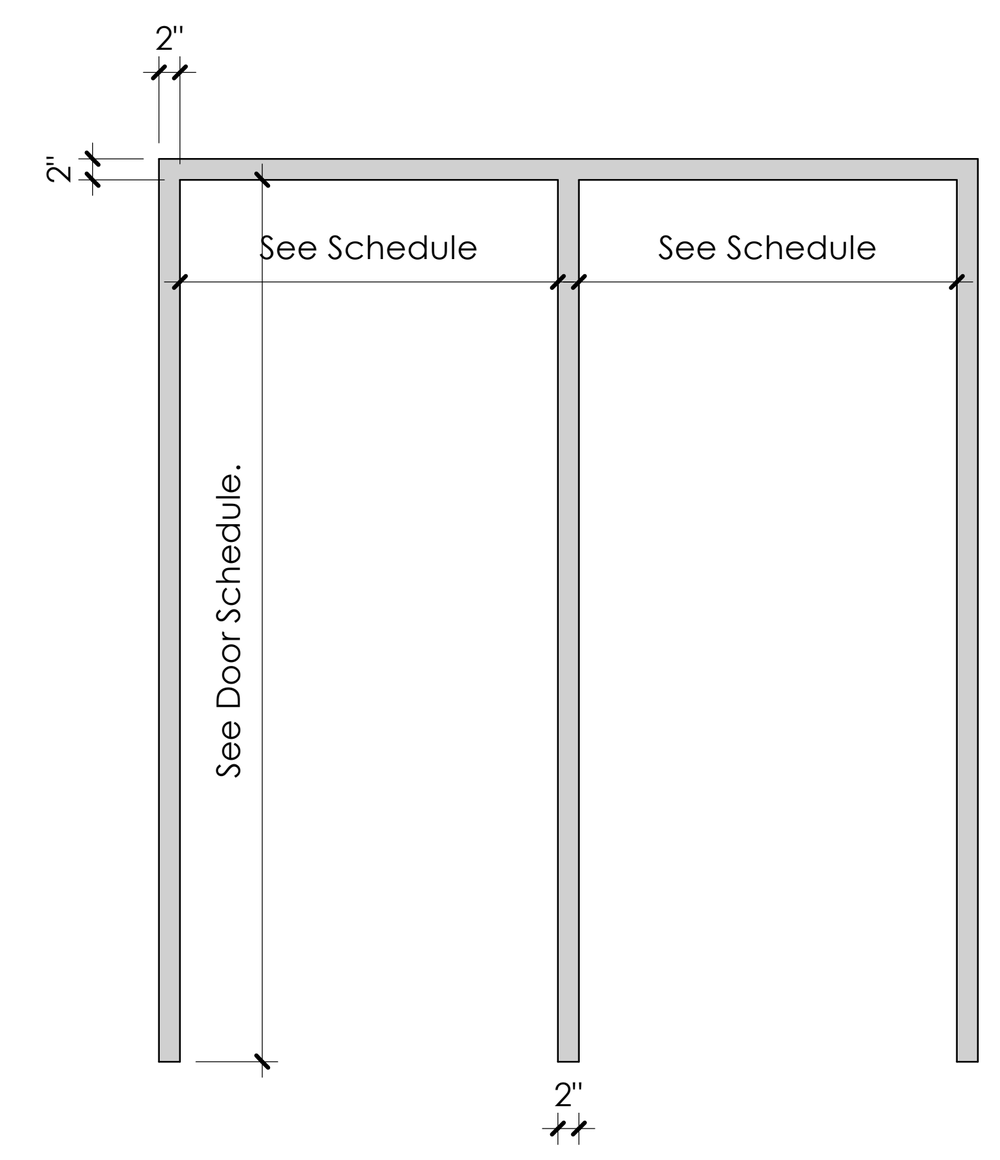

② Exterior Aluminum Frame
Scale: 1/2" = 1'-0"

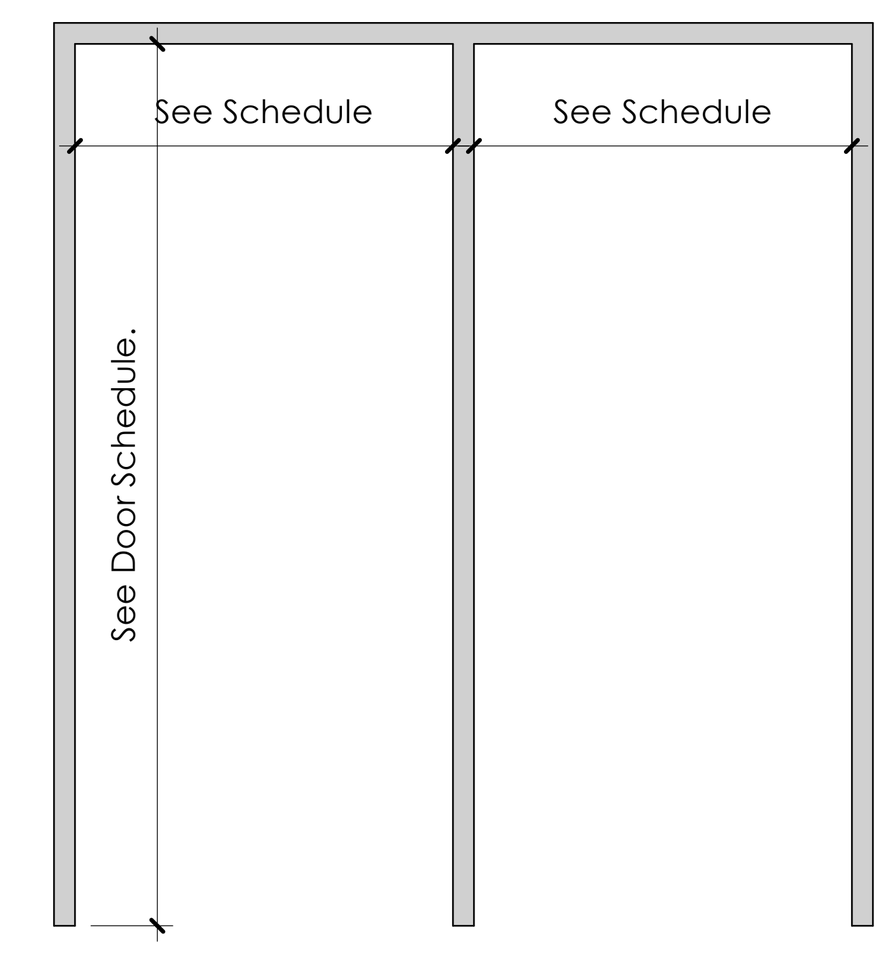

③ Interior Aluminum Frame
Scale: 1/2" = 1'-0"

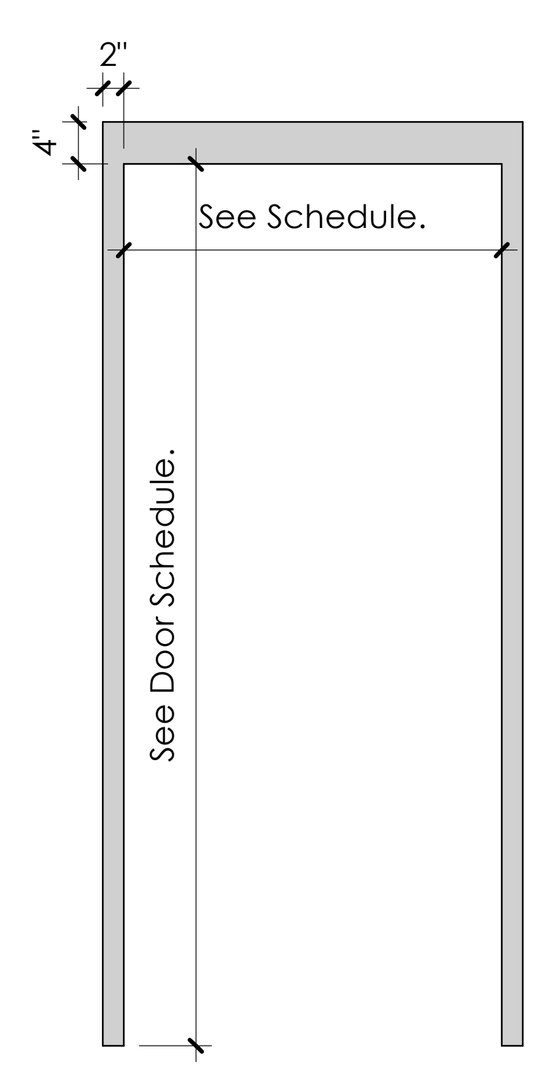

④ Exterior Hollow Metal Frame
Scale: 1/2" = 1'-0"

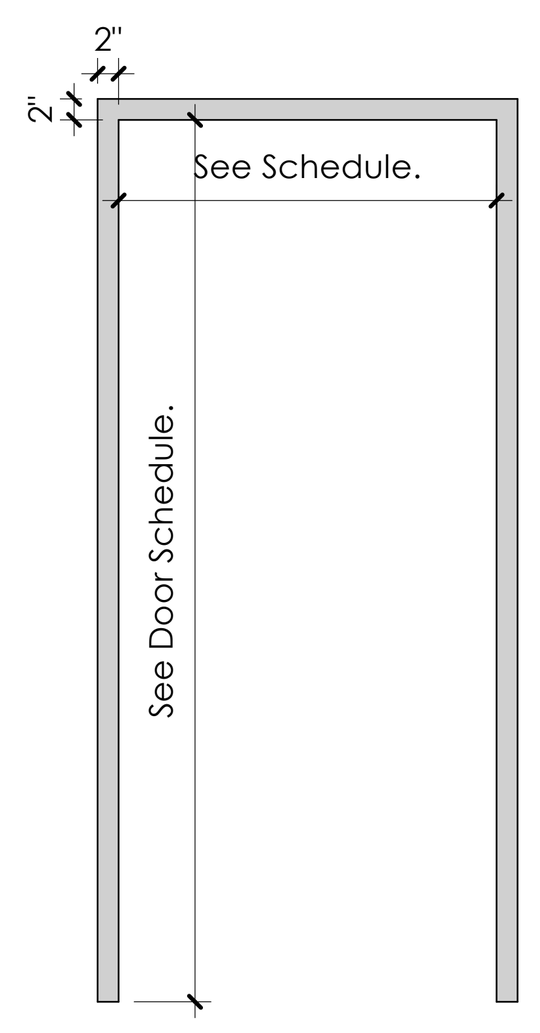

⑤ Interior Hollow Metal Frame
Scale: 1/2" = 1'-0"

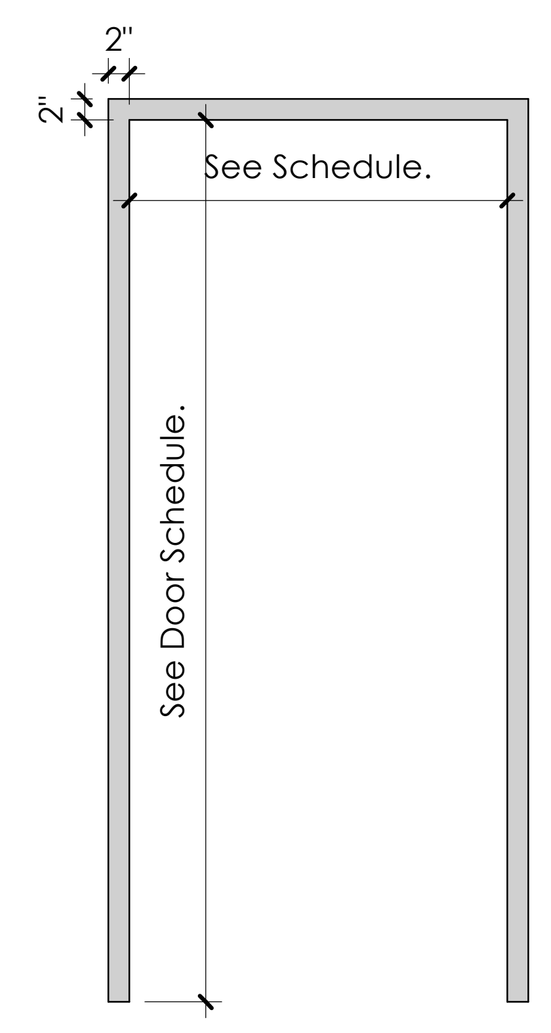

⑥ Exterior Aluminum Frame
Scale: 1/2" = 1'-0"

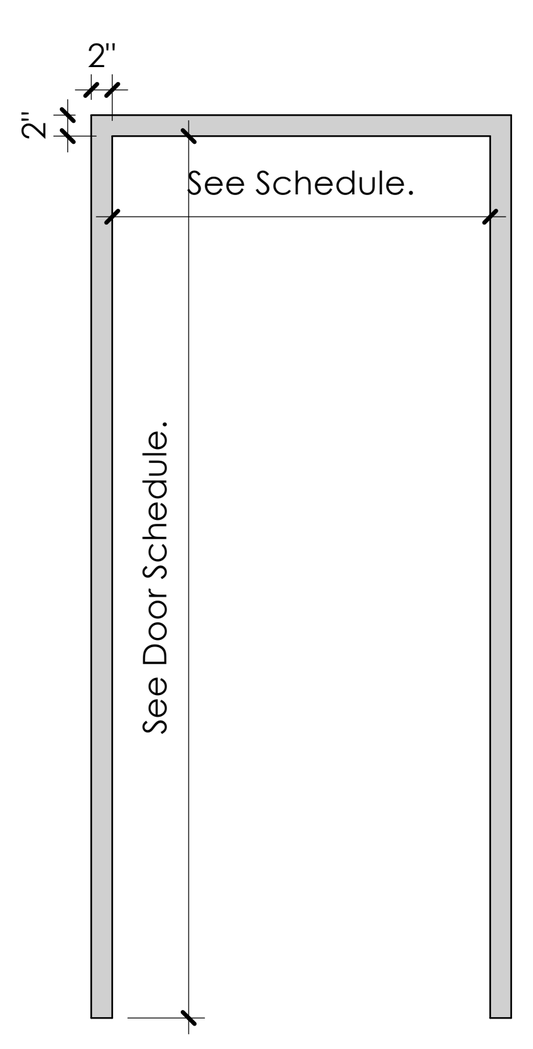

⑦ Interior Aluminum Frame
Scale: 1/2" = 1'-0"

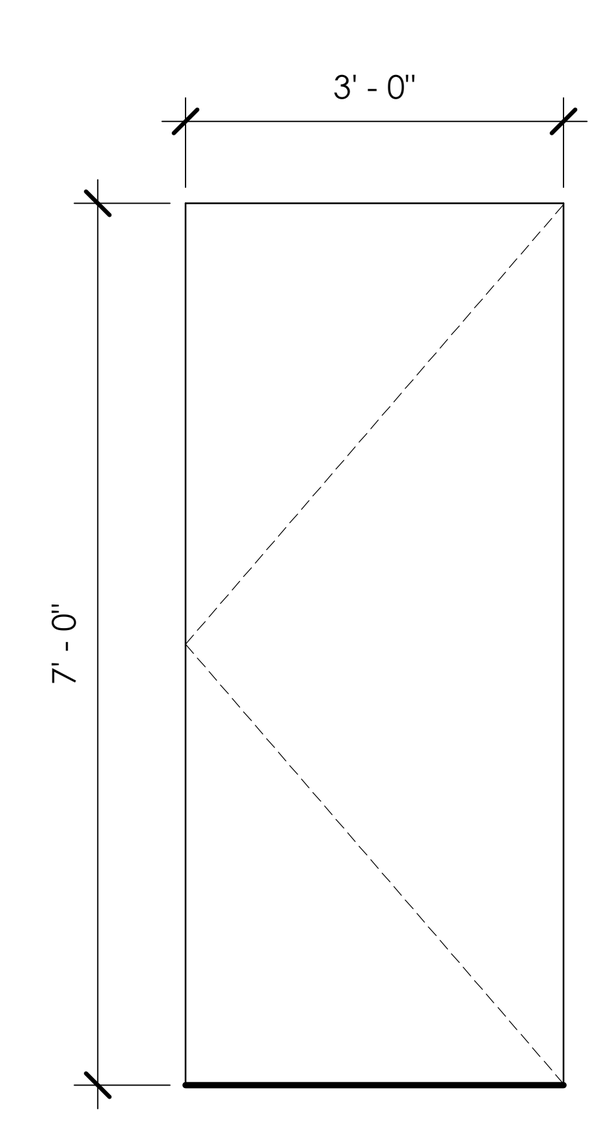

Ⓐ Solid Core Wood Door
Scale: 1/2" = 1'-0"

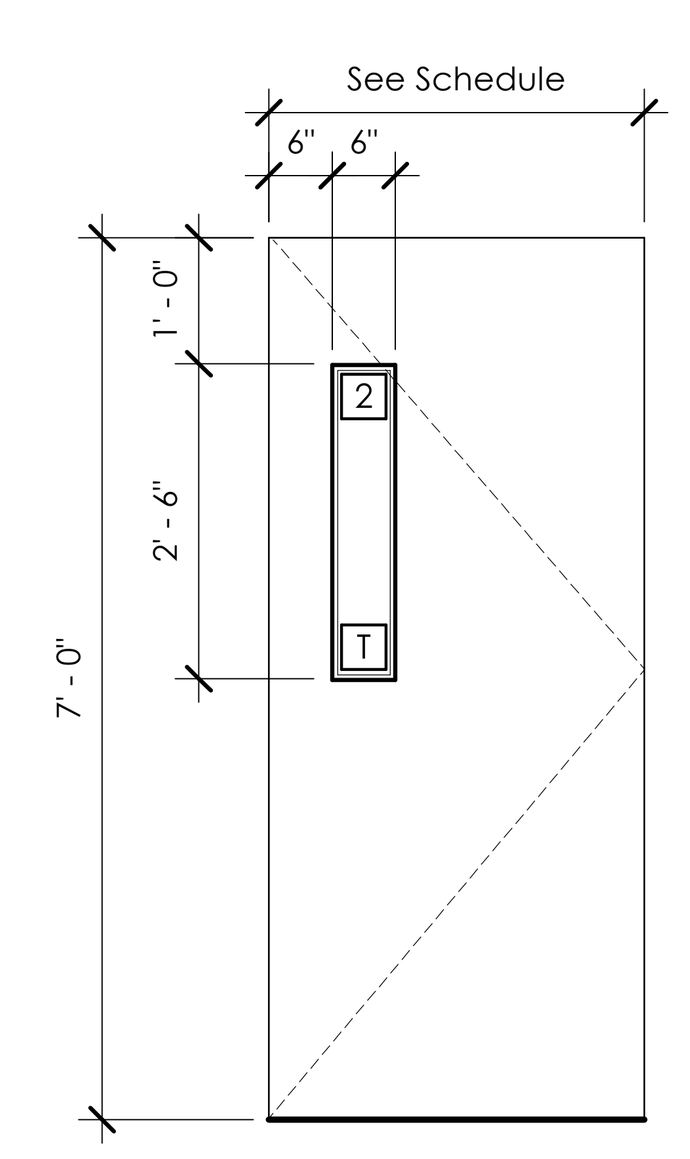

Ⓑ Solid Wood Door View Lite
Scale: 1/2" = 1'-0"

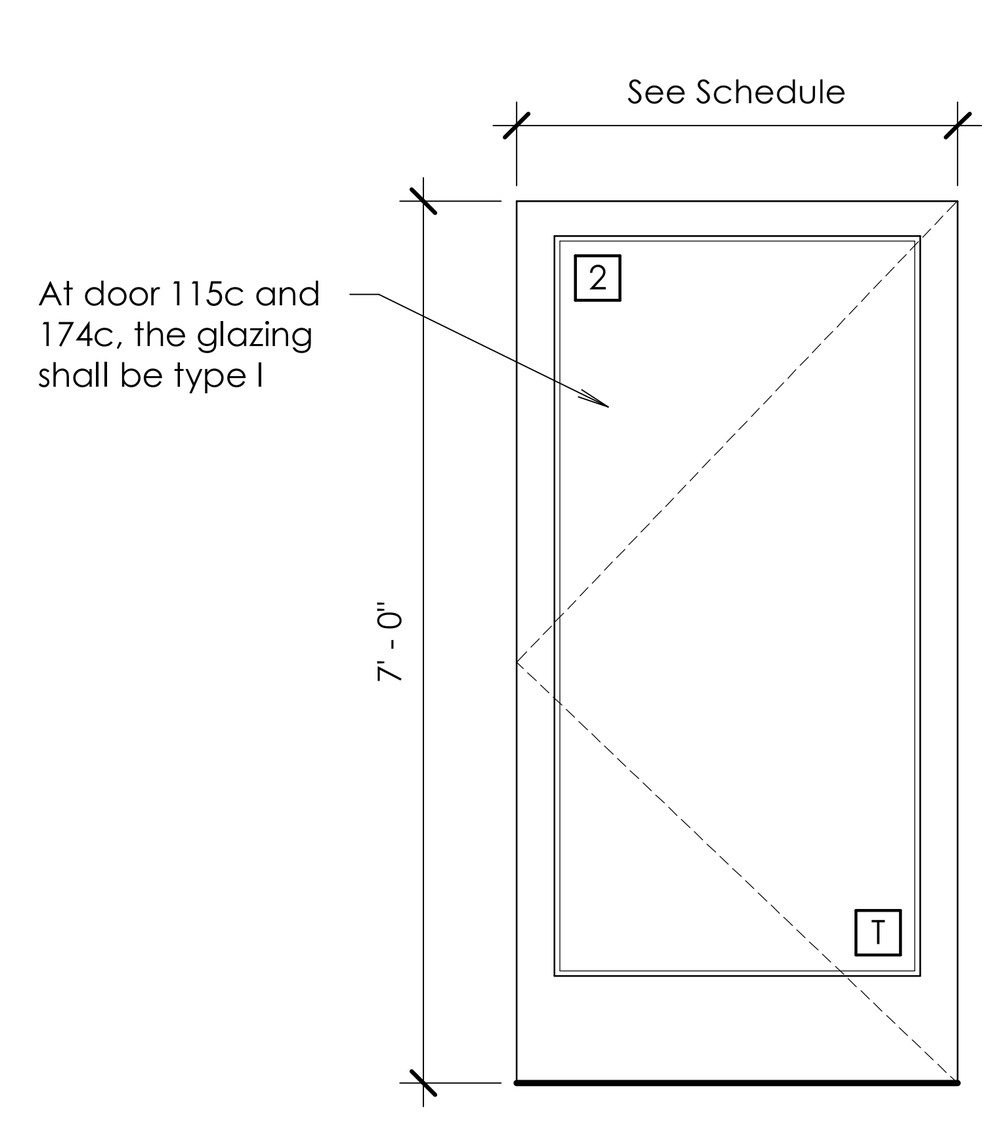

Ⓒ Aluminum Door
Scale: 1/2" = 1'-0"

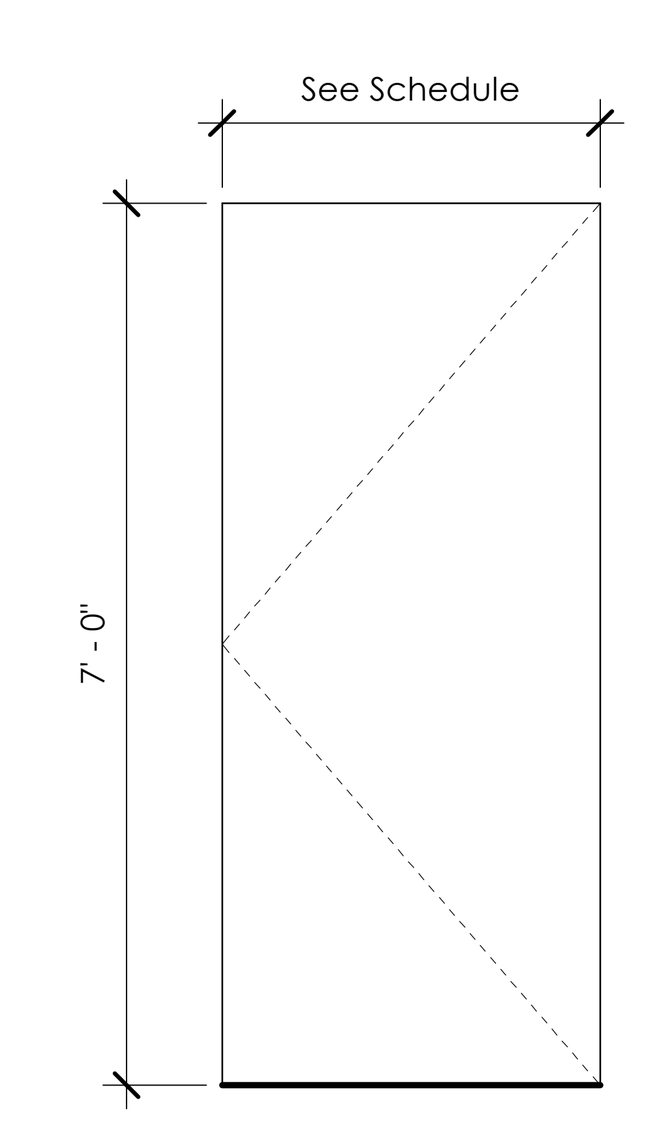

Ⓓ Exterior Hollow Metal Door
Scale: 1/2" = 1'-0"

General Notes

A.	Due to multiple use, some of the details referred to on the door schedule are reversed and / or turned from the direction shown on the floor plan. The general intent of the details shall in all cases be followed and the Architect shall be consulted should questions arise.
B.	Doors shall be set to clear the finished floor surface by 1/2".
C.	Hollow metal door frame throat dimensions shall be 1/4" wider than the finished wall thickness. See J/A611.
D.	Frame depth dimensions and wall thickness dimensions shown on the Door Schedule and door details are to assist in preparation of bids but shall in all cases be verified prior to fabrication and installation of door frames.
E.	See the Specifications for keying requirements. Coordinate all keying requirements and scheduling with the Facilities Management Group prior to fabrication.
F.	See the Specifications for Hardware Group definitions.
G.	All door hardware shall comply with the requirements of IBC 1010.1.9.1. Door handles, pulls, latches, locks, and other operating devices shall not require tight grasping, tight pinching, or twisting of the wrist to operate.
H.	Door handles, pulls, latches, locks, and other operating devices shall be installed 34 inches minimum and 48 inches maximum above the finished floor.
J.	No doors on this project are fire rated.
K.	Install all panic hardware as required in Section 1010.1.10 of the IBC [version as noted on the code sheets].

Remarks

R1	Prepare for access controls. Access controls furnished and intalled by owner.
R2	Prepare for high security cylinder. High security cyliner urnished and intalled by owner.

Door Stop / Closer Function

DS1	Wall stop. No closer.
DS2	Closer with cush-stop arm, wall stop.
DS3	Closer with cush-stop arm.
DS4	Closer with detent hold-open arm.
DS5	Closer and wall stop.
DS6	Closer with friction hold open arm and wall stop.
DS7	Closer with detent spring-stop hold open arm.

Door Swing Settings

SS1	Mount door hardware to allow the maximum swing opening (approximately 90°) that will engage the hold-open function while preventing contact between the door and the chair rail even when significant force is applied to the door.
SS2	Mount door hardware to allow the maximum swing opening (approximately 175°) that will still engage the hold-open function.
SS3	Mount door hardware to allow the maximum swing opening (not to exceed 110°) without the door or hardware contacting opposing surfaces.

Door Operators

DO1	Low energy swing door operator.

Thresholds

T1	Aluminum threshold. See P, N, O/A611.
T1b	Aluminum threshold by wood floor contractor. See R/A611.
T2	Stone threshold by tile contractor. See Q/A611.
T3	Metal transition strip by tile contractor. See S/A611.
T4	Sound control threshold. See T/A611.

Glazing Schedule

1	Low-E, Obscure Insulated Panel
2	Low-E, Insulated Panel
3	1/4" Float Glass
T	Tempered
S	Spandrel

Door Schedule

Room	Mark	Single	Pair	Door Elevation	Width	Height	Frame Type	Frame Throat	Head Detail	Jamb Detail	Hardware	Threshold	Remarks	Mark	Room
Aluminum Storefront Doors															
Serving Area	114c	X		C	3' - 0"	7' - 0"	1	0"	C1/A611	C2/A611	ST1B	T1	DS4, SS3	114c	Serving Area
Vestibule	119a	X		C	3' - 0"	7' - 0"	2; D/A601	0"	A1/A611	A2/A611	ST1A	T1	DS3, SS3, DO1	119a	Vestibule
Vestibule	119b	X		C	3' - 0"	7' - 0"	2; D/A601	0"	A1/A611	A2/A611	ST1B	T1	DS3, SS3	119b	Vestibule
Vestibule	119c	X		C	3' - 0"	7' - 0"	2; D/A601	0"	A1/A611	A2/A611	ST1	T1	DS3, SS3, R2	119c	Vestibule
Vestibule	119d	X		C	3' - 0"	7' - 0"	2; D/A601	0"	A1/A611	A2/A611	ST1	T1	DS3, SS3, R1	119d	Vestibule
Foyer	120a	X		C	3' - 0"	7' - 0"	3; E/A601	0"	B1/A611	B2/A611	ST3A	-	DS3, SS3, DO1	120a	Foyer
Foyer	120b	X		C	3' - 0"	7' - 0"	3; E/A601	0"	B1/A611	B2/A611	ST3B	-	DS3, SS3	120b	Foyer
Foyer	120c	X		C	3' - 0"	7' - 0"	3; E/A601	0"	B1/A611	B2/A611	ST3B	-	DS3, SS3	120c	Foyer
Foyer	120d	X		C	3' - 0"	7' - 0"	3; E/A601	0"	B1/A611	B2/A611	ST3B	-	DS3, SS3	120d	Foyer
Vestibule	129a	X		C	3' - 6"	7' - 0"	6; B/A601	0"	A1/A611	A2/A611	ST1B	T1	DS3, SS3	129a	Vestibule
Vestibule	129b	X		C	3' - 6"	7' - 0"	6; B/A601	0"	A1/A611	A2/A611	ST1B	T1	DS3, SS3	129b	Vestibule
Vestibule	130a	X		C	3' - 0"	7' - 0"	2; F/A601	0"	A1/A611	A2/A611	ST1B	T1	DS3, SS3	130a	Vestibule
Vestibule	130b	X		C	3' - 0"	7' - 0"	2; F/A601	0"	A1/A611	A2/A611	ST1B	T1	DS3, SS3	130b	Vestibule
Vestibule	130c	X		C	3' - 0"	7' - 0"	3; G/A601	0"	B1/A611	B2/A611	ST3	-	DS3, SS3	130c	Vestibule
Vestibule	130d	X		C	3' - 0"	7' - 0"	3; G/A601	0"	B1/A611	B2/A611	ST3	-	DS3, SS3	130d	Vestibule
Vestibule	157a	X		C	3' - 0"	7' - 0"	2; F/A601	0"	A1/A611	A2/A611	ST1B	T1	DS3, SS3	157a	Vestibule
Vestibule	157b	X		C	3' - 0"	7' - 0"	2; F/A601	0"	A1/A611	A2/A611	ST1B	T1	DS3, SS3	157b	Vestibule
Vestibule	157c	X		C	3' - 0"	7' - 0"	3; G/A601	0"	B1/A611	B2/A611	ST3	-	DS3, SS3	157c	Vestibule
Vestibule	157d	X		C	3' - 0"	7' - 0"	3; G/A601	0"	B1/A611	B2/A611	ST3	-	DS3, SS3	157d	Vestibule
Serving Area	172c	X		C	3' - 0"	7' - 0"	1	0"	C1/A611	C2/A611	ST1B	T1	DS4, SS3	172c	Serving Area
Foyer	179a	X		C	3' - 0"	7' - 0"	3; E/A601	0"	B1/A611	B2/A611	ST3A	-	DS3, SS3, DO1	179a	Foyer
Foyer	179b	X		C	3' - 0"	7' - 0"	3; E/A601	0"	B1/A611	B2/A611	ST3B	-	DS3, SS3	179b	Foyer
Foyer	179c	X		C	3' - 0"	7' - 0"	3; E/A601	0"	B1/A611	B2/A611	ST3B	-	DS3, SS3	179c	Foyer
Foyer	179d	X		C	3' - 0"	7' - 0"	3; E/A601	0"	B1/A611	B2/A611	ST3B	-	DS3, SS3	179d	Foyer
Vestibule	180a	X		C	3' - 0"	7' - 0"	2; D/A601	0"	A1/A611	A2/A611	ST1A	T1	DS3, SS3, DO1	180a	Vestibule
Vestibule	180b	X		C	3' - 0"	7' - 0"	2; D/A601	0"	A1/A611	A2/A611	ST1B	T1	DS3, SS3	180b	Vestibule
Vestibule	180c	X		C	3' - 0"	7' - 0"	2; D/A601	0"	A1/A611	A2/A611	ST1	T1	DS3, SS3, R2	180c	Vestibule
Vestibule	180d	X		C	3' - 0"	7' - 0"	2; D/A601	0"	A1/A611	A2/A611	ST1	T1	DS3, SS3, R1	180d	Vestibule
Vestibule	190a	X		C	3' - 6"	7' - 0"	6; B/A601	0"	A1/A611	A2/A611	ST1B	T1	DS3, SS3	190a	Vestibule
Vestibule	190b	X		C	3' - 6"	7' - 0"	6; B/A601	0"	A1/A611	A2/A611	ST1B	T1	DS3, SS3	190b	Vestibule
Hollow Metal Doors															
Stair	115a	X		D	3' - 0"	7' - 0"	4	10"	D1/A611	D2/A611	3	T1	DS7, SS3	115a	Stair
Equipment Storage	301a	X		D	3' - 6"	7' - 0"	4	6 1/2"	E/C801	B/C801	1	T1	DS7, SS3	301a	Equipment Storage
Ward Storage	302a		X	D	6' - 0"	7' - 0"	4	6 1/2"	E/C801	B/C801	50F	T1	DS7, SS3	302a	Ward Storage
Partitions															
Room	P107		X	-	28' - 4 1/4"	8' - 0"	-		G/A613	D & F/A613	-	-	-	P107	Room
Room	P109		X	-	28' - 4 1/4"	8' - 0"	-		G/A613	D & F/A613	-	-	-	P109	Room
Room	P112		X	-	28' - 4 1/4"	8' - 0"	-		G/A613	D & F/A613	-	-	-	P112	Room
Chapel	P146		X	-	47' - 4"	16' - 0"	-		A/A612	B/A612	-	T1b	-	P146	Chapel
Cultural Center	P147		X	-	47' - 4"	18' - 9"	-		A/A612	B/A612	-	-	-	P147	Cultural Center
Chapel	P151		X	-	47' - 4"	16' - 0"	-		A/A612	B/A612	-	T1b	-	P151	Chapel
Room	P164		X	-	28' - 4 1/4"	8' - 0"	-		G/A613	D & F/A613	-	-	-	P164	Room
Room	P166		X	-	28' - 4 1/4"	8' - 0"	-		G/A613	D & F/A613	-	-	-	P166	Room
Room	P168		X	-	28' - 4 1/4"	8' - 0"	-		G/A613	D & F/A613	-	-	-	P168	Room
Solid Core Wood Doors															
Interview	101a	X		A	3' - 0"	7' - 0"	5	7 5/8"	E1/A611	E2/A611	20B	T4	DS1	101a	Interview
Interview	102a	X		A	3' - 0"	7' - 0"	5	7 5/8"	E1/A611	E2/A611	20B	T4	DS1	102a	Interview
Bishop	103a	X		A	3' - 0"	7' - 0"	5	11 5/8"	E1/A611	E2/A611	26	T4	DS1	103a	Bishop
Bishop	104a	X		A	3' - 0"	7' - 0"	5	11 5/8"	E1/A611	E2/A611	26	T4	DS1	104a	Bishop
Clerk	106a	X		A	3' - 0"	7' - 0"	5	7 5/8"	E1/A611	E2/A611	26	T4	DS1	106a	Clerk
Room	107a	X		B	3' - 0"	7' - 0"	5	7"	E1/A611	E2/A611	30	-	DS4, SS1	107a	Room
Room	107b	X		B	3' - 0"	7' - 0"	5	7"	E1/A611	E2/A611	30	-	DS4, SS1	107b	Room
Room	108a	X		B	3' - 0"	7' - 0"	5	7"	E1/A611	E2/A611	30	-	DS4, SS1	108a	Room
Room	108b	X		B	3' - 0"	7' - 0"	5	7"	E1/A611	E2/A611	30	-	DS4, SS1	108b	Room
Room	109a	X		B	3' - 0"	7' - 0"	5	7"	E1/A611	E2/A611	30	-	DS4, SS1	109a	Room
Room	109b	X		B	3' - 0"	7' - 0"	5	7"	E1/A611	E2/A611	30	-	DS4, SS1	109b	Room
Room	110a	X		B	3' - 0"	7' - 0"	5	7"	E1/A611	E2/A611	30	-	DS4, SS1	110a	Room
Room	110b	X		B	3' - 0"	7' - 0"	5	7"	E1/A611	E2/A611	30	-	DS4, SS1	110b	Room
Room	112a	X		B	3' - 0"	7' - 0"	5	7"	E1/A611	E2/A611	30	-	DS4, SS1	112a	Room
Room	112b	X		B	3' - 0"	7' - 0"	5	7"	E1/A611	E2/A611	30	-	DS4, SS1	112b	Room
Room	113a	X		B	3' - 0"	7' - 0"	5	7"	E1/A611	E2/A611	30	-	DS4, SS1	113a	Room
Room	113b	X		B	3' - 0"	7' - 0"	5	7"	E1/A611	E2/A611	30	-	DS4, SS1	113b	Room
Serving Area	114a	X		B	3' - 0"	7' - 0"	5	7"	E1/A611	E2/A611	30	T3	DS4, SS1	114a	Serving Area
Serving Area	114b		X	A	6' - 0"	7' - 0"	5	7"	E1/A611	E2/A611	50B	T3	DS1	114b	Serving Area
Family Restroom	116a	X		A	3' - 0"	7' - 0"	5	7"	E1/A611	E2/A611	32	T2	DS5	116a	Family Restroom
Room	117a	X		B	3' - 0"	7' - 0"	5	8 1/8"	E1/A611	E2/A611	30	-	DS4, SS1	117a	Room
Table/Chair Storage	118a		X	A	6' - 0"	7' - 0"	5	7"	E1/A611	E2/A611	50A	-	DS1	118a	Table/Chair Storage
Table/Chair Storage	118b		X	A	6' - 0"	7' - 0"	5	7"	E1/A611	E2/A611	50A	-	DS1	118b	Table/Chair Storage
Snow Storage	121a	X		A	3' - 0"	7' - 0"	5	7 5/8"	E1/A611	E2/A611	20A	T3	DS1	121a	Snow Storage
Clerk	122a	X		A	3' - 0"	7' - 0"	5	7 5/8"	E1/A611	E2/A611	26	T4	DS1	122a	Clerk
Interview	123a	X		A	3' - 0"	7' - 0"	5	7 5/8"	E1/A611	E2/A611	20B	T4	DS1	123a	Interview
Interview	124a	X		A	3' - 0"	7' - 0"	5	7 5/8"	E1/A611	E2/A611	20B	T4	DS1	124a	Interview
Stake President	125a	X		A	3' - 0"	7' - 0"	5	7 5/8"	E1/A611	E2/A611	26	T4	DS1	125a	Stake President
Waiting	126a	X		A	3' - 0"	7' - 0"	5	7 5/8"	E1/A611	E2/A611	26	-	DS1	126a	Waiting
Family Restroom	127a	X		A	3' - 0"	7' - 0"	5	7"	E1/A611	E2/A611	32	T2	DS5	127a	Family Restroom
High Council	128a	X		A	3' - 0"	7' - 0"	5	7 5/8"	E1/A611	E2/A611	26	T4	DS1	128a	High Council
High Council	128b	X		A	3' - 0"	7' - 0"	5	7 5/8"	E1/A611	E2/A611	26	T4	DS1	128b	High Council
Materials Center	131a	X		B	3' - 0"	7' - 0"	5	7"	E1/A611	E2/A611	20A	-	DS1	131a	Materials Center
Bishop	132a	X		A	3' - 0"	7' - 0"	5	11 5/8"	E1/A611	E2/A611	26	T4	DS1	132a	Bishop
Interview	133a	X		A	3' - 0"	7' - 0"	5	7 5/8"	E1/A611	E2/A611	20B	T4	DS1	133a	Interview
Interview	134a	X		A	3' - 0"	7' - 0"	5	7 5/8"	E1/A611	E2/A611	20B	T4	DS1	134a	Interview
Bishop	135a	X		A	3' - 0"	7' - 0"	5	11 5/8"	E1/A611	E2/A611	26	T4	DS1	135a	Bishop
Clerk	137a	X		A	3' - 0"	7' - 0"	5	7 5/8"	E1/A611	E2/A611	26	T4	DS1	137a	Clerk
Room	139a	X		B	3' - 0"	7' - 0"	5	7"	E1/A611	E2/A611	30	-	DS4, SS1	139a	Room
Room	139b	X		B	3' - 0"	7' - 0"	5	7"	E1/A611	E2/A611	30	-	DS4, SS1	139b	Room
Room	140a	X		B	3' - 0"	7' - 0"	5	7"	E1/A611	E2/A611	30	-	DS4, SS1	140a	Room
Room	140b	X		B	3' - 0"	7' - 0"	5	7"	E1/A611	E2/A611	30	-	DS4, SS1	140b	Room
Men	141a	X		A	3' - 0"	7' - 0"	5	5"	E1/A611	E2/A611	28	T2	DS5	141a	Men
Men	141b	X		A	3' - 0"	7' - 0"	5	5"	E1/A611	E2/A611	28	T2	DS5	141b	Men
Women	142a	X		A	3' - 0"	7' - 0"	5	5"	E1/A611	E2/A611	28	T2	DS5	142a	Women
Women	142b	X		A	3' - 0"	7' - 0"	5	5"	E1/A611	E2/A611	28	T2	DS5	142b	Women
Custodial	143a	X		A	3' - 0"	7' - 0"	5	8 3/4"	E1/A611	E2/A611	20C	T2	DS1	143a	Custodial
Custodial	144a	X		A	3' - 0"	7' - 0"	5	8 3/4"	E1/A611	E2/A611	20C	T2	DS1	144a	Custodial
Chapel	146a	X		A	3' - 0"	7' - 0"	5	8 3/4"	E1/A611	E2/A611	30	-	DS4, SS1	146a	Chapel
Chapel	146b	X		A	3' - 0"	7' - 0"	5	8 3/4"	E1/A611	E2/A611	30	-	DS4, SS1	146b	Chapel
Chapel	146c		X	A	6' - 0"	7' - 0"	5	9 3/16"	E1/A611	E2/A611	52	-	DS4, SS1	146c	Chapel
Chapel	146d		X	A	6' - 0"	7' - 0"	5	8 3/4"	E1/A611	E2/A611	52	-	DS4, SS1	146d	Chapel
Cultural Center	147a		X	A	6' - 0"	7' - 0"	5	9 3/16"	E1/A611	E2/A611	52	T1b	DS7, SS1	147a	Cultural Center
Cultural Center	147b		X	A	6' - 0"	7' - 0"	5	8 3/4"	E1/A611	E2/A611	52	T1b	DS7, SS1	147b	Cultural Center
Storage	148a	X		A	3' - 0"	7' - 0"	5	9 5/8"	E1/A611	E2/A611	30	T1b	DS7, SS1	148a	Storage
Storage	149a	X		A	3' - 0"	7' - 0"	5	9 5/8"	E1/A611	E2/A611	30	T1b	DS7, SS1	149a	Storage
Storage	150a	X		A	3' - 0"	7' - 0"	5	9 5/8"	E1/A611	E2/A611	30	T1b	DS7, SS1	150a	Storage
Cultural Center	151a		X	A	6' - 0"	7' - 0"	5	9 3/16"	E1/A611	E2/A611	52	T1b	DS7, SS1	151a	Cultural Center
Cultural Center	151b		X	A	6' - 0"	7' - 0"	5	9 3/16"	E1/A611	E2/A611	52	T1b	DS7, SS1	151b	Cultural Center
Storage	152a	X		A	3' - 0"	7' - 0"	5	9 5/8"	E1/A611	E2/A611	30	T1b	DS7, SS1	152a	Storage
Chapel	153a		X	A	6' - 0"	7' - 0"	5	8 3/4"	E1/A611	E2/A611	52	-	DS4, SS1	153a	Chapel
Chapel	153b		X	A	6' - 0"	7' - 0"	5	9 3/16"	E1/A611	E2/A611	52	-	DS4, SS1	153b	Chapel
Chapel	153c	X		A	3' - 0"	7' - 0"	5	9 3/16"	E1/A611	E2/A611	30	-	DS4, SS1	153c	Chapel
Chapel	153d	X		A	3' - 0"	7' - 0"	5	9 3/16"	E1/A611	E2/A611	30	-	DS4, SS1	153d	Chapel
Sacrament Preparation	154a	X		A	3' - 0"	7' - 0"	5	5 7/16"	E1/A611	E2/A611	20A	-	DS1	154a	Sacrament Preparation
Fire Riser	156a	X		A	3' - 0"	7' - 0"	5	5"	E1/A611	E2/A611	23	T3	DS1	156a	Fire Riser
Interview	158a	X		A	3' - 0"	7' - 0"	5	7 5/8"	E1/A611	E2/A611	20B	T4	DS1	158a	Interview
Interview	159a	X		A	3' - 0"	7' - 0"	5	7 5/8"	E1/A611	E2/A611	20B	T4	DS1	159a	Interview
Bishop	160a	X		A	3' - 0"	7' - 0"	5	11 5/8"	E1/A611	E2/A611	26	T4	DS1	160a	Bishop
Clerk	162a	X		A	3' - 0"	7' - 0"	5	7 5/8"	E1/A611	E2/A611	26	T4	DS1	162a	Clerk
Bishop	163a	X		A	3' - 0"	7' - 0"	5	11 5/8"	E1/A611	E2/A611	26	T4	DS1	163a	Bishop
Room	164a	X		B	3' - 0"	7' - 0"	5	7"	E1/A611	E2/A611	30	-	DS4, SS1	164a	Room
Room	164b	X		B	3' - 0"	7' - 0"	5	7"	E1/A611	E2/A611	30	-	DS4, SS1	164b	Room
Room	165a	X		B	3' - 0"	7' - 0"	5	7"	E1/A611	E2/A611	30	-	DS4, SS1	165a	Room
Room	165b	X		B	3' - 0"	7' - 0"	5	7"	E1/A611	E2/A611	30	-	DS4, SS1	165b	Room
Room	166a	X		B	3' - 0"	7' - 0"	5	7"	E1/A611	E2/A611	30	-	DS4, SS1	166a	Room
Room	166b	X		B	3' - 0"	7' - 0"	5	7"	E1/A611	E2/A611	30	-	DS4, SS1	166b	Room
Room	167a	X		B	3' - 0"	7' - 0"	5	7"	E1/A611	E2/A611	30	-	DS4, SS1	167a	Room
Room	167b	X		B	3' - 0"	7' - 0"	5	7"	E1/A611	E2/A611	30	-	DS4, SS1	167b	Room
Room	168a	X		B	3' - 0"	7' - 0"	5	7"	E1/A611	E2/A611	30	-	DS4, SS1	168a	Room
Room	168b	X		B	3' - 0"	7' - 0"	5	7"	E1/A611	E2/A611	30	-	DS4, SS1	168b	Room
Room	169a	X		B	3' - 0"	7' - 0"	5	7"	E1/A611	E2/A611	30	-	DS4, SS1	169a	Room
Room	169b	X		B	3' - 0"	7' - 0"	5	7"	E1/A611	E2/A611	30	-	DS4, SS1	169b	Room
Family Restroom	171a	X		A	3' - 0"	7' - 0"	5	7"	E1/A611	E2/A611	32	T2	DS5	171a	Family Restroom
Serving Area	172a	X		B	3' - 0"	7' - 0"	5	7"	E1/A611	E2/A611	30	T3	DS4, SS1	172a	Serving Area
Serving Area	172b		X	A	6' - 0"	7' - 0"	5	7"	E1/A611	E2/A611	50B	T3	DS1	172b	Serving Area
Interview	173a	X		A	3' - 0"	7' - 0"	5	7 5/8"	E1/A611	E2/A611	20B	T4	DS1	173a	Interview
Interview	174a	X		A	3' - 0"	7' - 0"	5	7 5/8"	E1/A611	E2/A611	20B	T4	DS1	174a	Interview
Bishop	175a	X		A	3' - 0"	7' - 0"	5	11 5/8"	E1/A611	E2/A611	26	T4	DS1	175a	Bishop
Clerk	177a	X		A	3' - 0"	7' - 0"	5	7 5/8"	E1/A611	E2/A611	26	T4	DS1	177a	Clerk
Bishop	178a	X		A	3' - 0"	7' - 0"	5	11 5/8"	E1/A611	E2/A611	26	T4	DS1	178a	Bishop
Technology	181a	X		A	3' - 0"	7' - 0"	5	7 5/8"	E1/A611	E2/A611	26A	T3	DS1	181a	Technology
Family Restroom	182a	X		A	3' - 0"	7' - 0"	5	7 5/8"	E1/A611	E2/A611	32	T2	DS5	182a	Family Restroom
Room	183a	X		B	3' - 0"	7' - 0"	5	7 5/8"	E1/A611	E2/A611	30	-	DS4, SS1	183a	Room
Interview	184a	X		A	3' - 0"	7' - 0"	5	7 5/8"	E1/A611	E2/A611	20B	T4	DS1	184a	Interview
Interview	185a	X		A	3' - 0"	7' - 0"	5	7 5/8"	E1/A611	E2/A611	20B	T4	DS1	185a	Interview
Bishop	186a	X		A	3' - 0"	7' - 0"	5	11 5/8"	E1/A611	E2/A611	26	T4	DS1	186a	Bishop
Clerk	188a	X		A	3' - 0"	7' - 0"	5	7 5/8"	E1/A611	E2/A611	26	T4	DS1	188a	Clerk
Bishop	189a	X		A	3' - 0"	7' - 0"	5	11 5/8"	E1/A611	E2/A611	26	T4	DS1	189a	Bishop

bhd ARCHITECTS
www.bhdarchitects.com
Phone 801.571.0010
Fax 801.571.0303
Toll Free 888.571.0010
65 East Wadsworth Park Drive
Suite 205 Draper, Utah 84020

LICENSED ARCHITECT
Lafe Theodore Harris
6928898-0301
STATE OF UTAH
15 Aug 2024

THE CHURCH OF JESUS CHRIST OF LATTER-DAY SAINTS

Orem YSA 3rd 10 Ward Building
Orem UT YSA 3rd Stake

Approx. 1700 West 575 South
Vineyard, Utah 84059

Date:	BHD #:	County Parcel:	Plan Series:	Owner #:
15 Aug 2024	2344	39:228:0001	2024 10 Ward SC	590-1876

Drawing Issue and Revision Schedule

#	Date	Description
1	15 Aug 2024	Bid Drawings

Door / Opening Schedule

A610

Printed 8/19/2024 9:25:44 PM

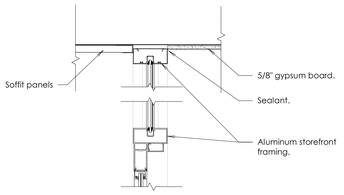

A1 Door/Window Head
Scale: 1 1/2" = 1'-0"

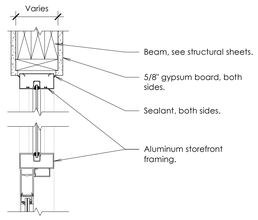

B1 Door/Window Head
Scale: 1 1/2" = 1'-0"

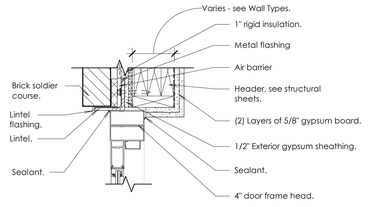

C1 Door/Window Head
Scale: 1 1/2" = 1'-0"

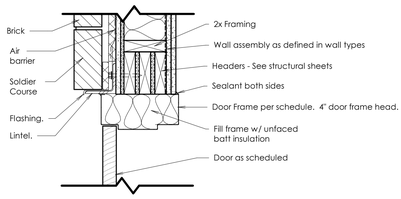

D1 Door Head
Scale: 1 1/2" = 1'-0"

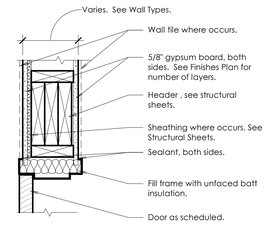

E1 Door Head
Scale: 1 1/2" = 1'-0"

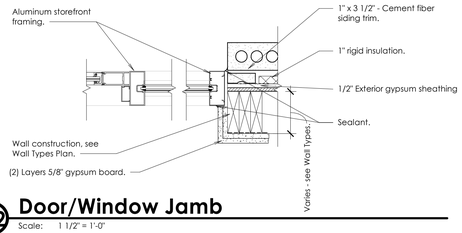

A2 Door/Window Jamb
Scale: 1 1/2" = 1'-0"

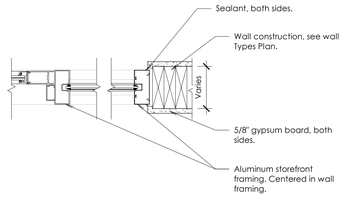

B2 Door/Window Jamb
Scale: 1 1/2" = 1'-0"

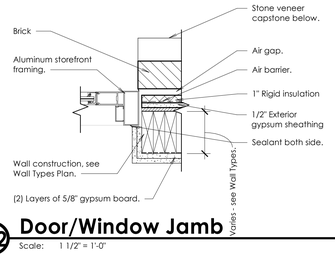

C2 Door/Window Jamb
Scale: 1 1/2" = 1'-0"

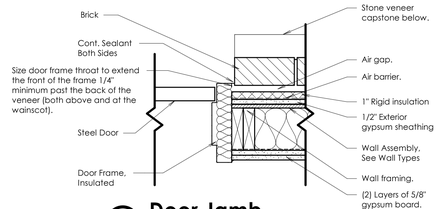

D2 Door Jamb
Scale: 1 1/2" = 1'-0"

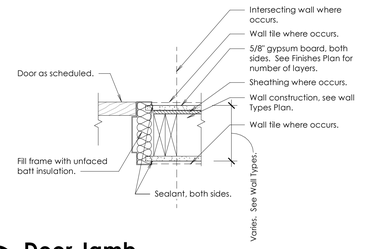

E2 Door Jamb
Scale: 1 1/2" = 1'-0"

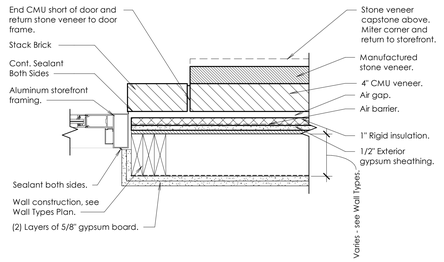

C3 Door/Window Jamb
Scale: 1 1/2" = 1'-0"

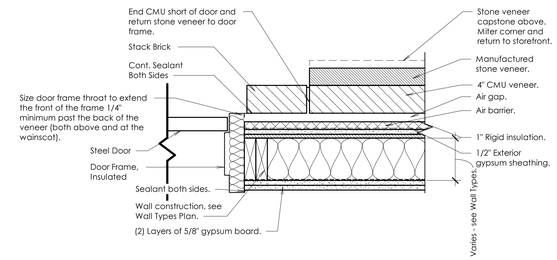

D3 Door Jamb
Scale: 1 1/2" = 1'-0"

Note:
Air barrier and continuous sheet vapor retarder shall be installed as indicated on Sheet A101.

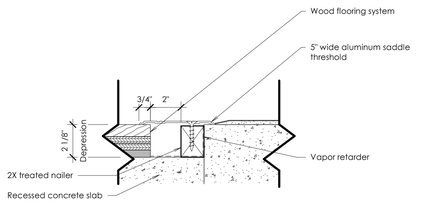

V Threshold Detail-Skyfold Door
Scale: 3" = 1'-0"

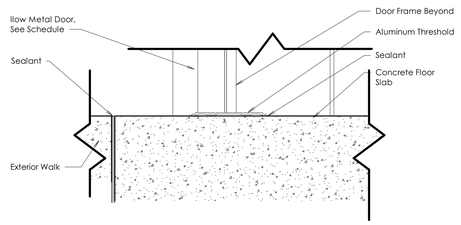

W Hollow Metal Door Threshold
Scale: 3" = 1'-0"

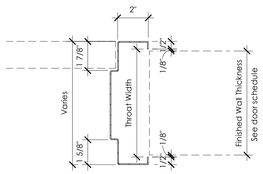

L Typical Hollow Metal Door Frame Detail
Scale: 3" = 1'-0"

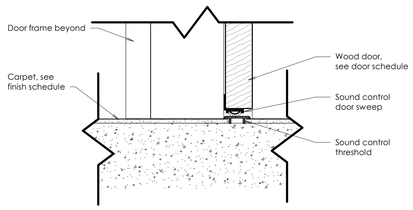

M Sound Control Threshold
Scale: 3" = 1'-0"

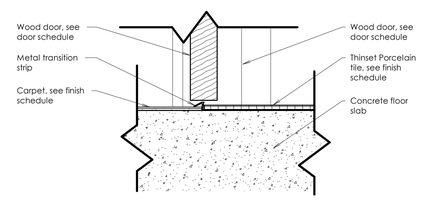

N Paver Tile Edge
Scale: 3" = 1'-0"

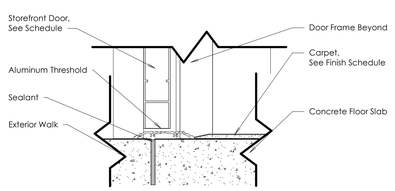

P Exterior Storefront Entry Threshold
Scale: 3" = 1'-0"

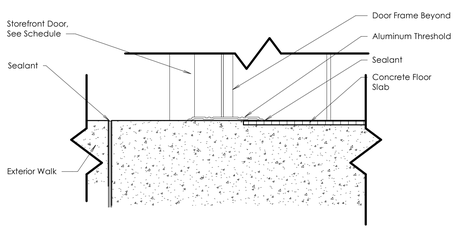

Q Storefront Threshold-Tile to Exterior
Scale: 3" = 1'-0"

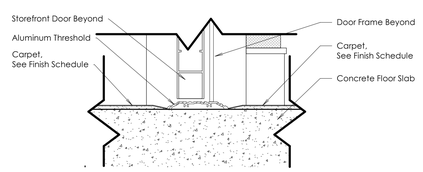

R Interior Storefront Threshold
Scale: 3" = 1'-0"

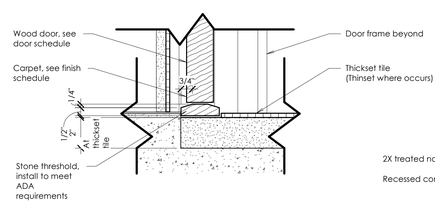

S Threshold Detail-Carpet to Tile
Scale: 3" = 1'-0"

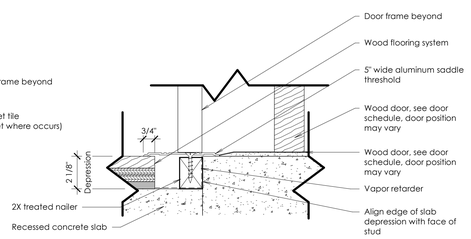

T Threshold Detail-Carpet to Wood
Scale: 3" = 1'-0"

bhd ARCHITECTS
www.bhdarchitects.com
Phone 801.571.0010
Fax 801.571.0303
Toll Free 888.571.0010
65 East Wadsworth Park Drive
Suite 205 Draper, Utah 84020

LICENSED ARCHITECT
Lafe Theodore Harris
15 Aug 2024
7315896-0301
STATE OF UTAH

THE CHURCH OF JESUS CHRIST OF LATTER-DAY SAINTS

Orem YSA 3rd 10 Ward Building
Orem UT YSA 3rd Stake

Approx. 1700 West 575 South
Vineyard, Utah 84059

Owner #: 590-1876
Plan Series: 2024 10 Ward SC
County Parcel: 39-225-0001
BHD #: 2544
Date: 15 Aug 2024

Drawing Issue and Revision Schedule		
No.	Date	Description
1	15 Aug 2024	Bid Drawings

Door Jamb, Door Head Details and Threshold Details

A611

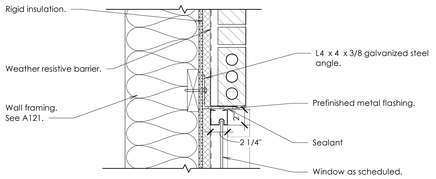

A Window Head Type C

Scale: 1 1/2" = 1'-0"

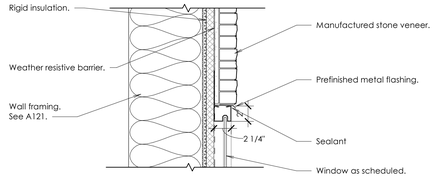

D Window Head Type D

Scale: 1 1/2" = 1'-0"

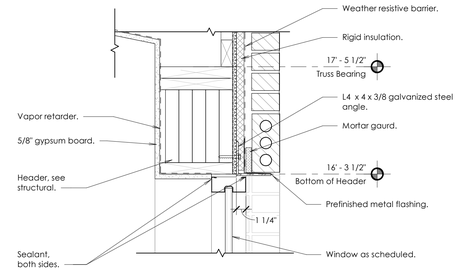

G Window Head Type B

Scale: 1 1/2" = 1'-0"

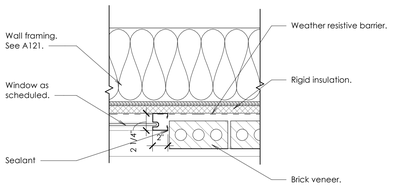

B Window Jamb Type C

Scale: 1 1/2" = 1'-0"

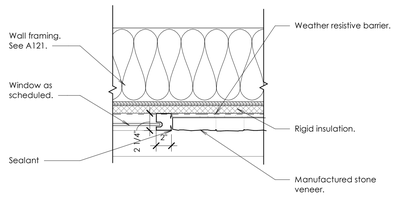

E Window Jamb Type D

Scale: 1 1/2" = 1'-0"

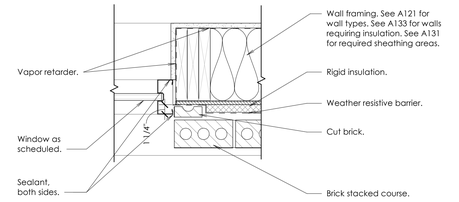

H Window Jamb Type B

Scale: 1 1/2" = 1'-0"

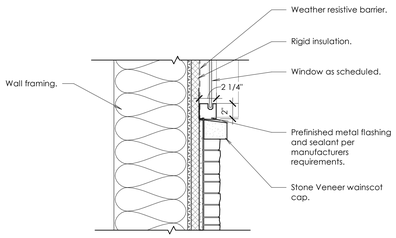

C Window Sill Type C

Scale: 1 1/2" = 1'-0"

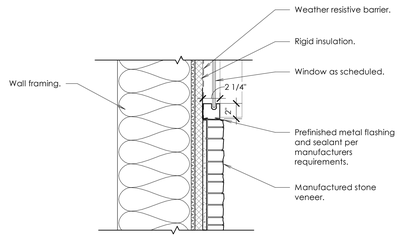

F Window Sill Type D

Scale: 1 1/2" = 1'-0"

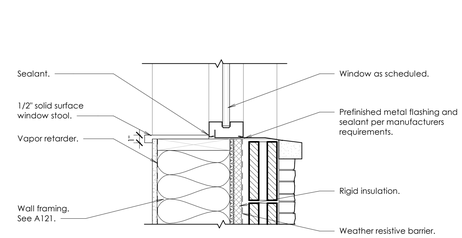

J Window Sill Type B

Scale: 1 1/2" = 1'-0"

bhd ARCHITECTS
www.bhdarchitects.com
Phone 801.571.0010
Fax 801.571.0303
Toll Free 888.571.0010
65 East Wadsworth Park Drive
Suite 205 Draper, Utah 84020

LICENSED ARCHITECT
Lafe Theodore Harris
15 Aug 2024
7855896-0301
STATE OF UTAH

THE CHURCH OF JESUS CHRIST OF LATTER-DAY SAINTS

Orem YSA 3rd 10 Ward Building
Orem UT YSA 3rd Stake

Approx. 1700 West 575 South
Vineyard, Utah 84059

Date: 15 Aug 2024
BHD #: 2344
County Parcel: 37-228-0001
Plan Series: 2024 10 Ward S.C.
Owner #: 590-1878

Drawing Issue and Revision Schedule		
#	Date	Description
1	15 Aug 2024	Bid Drawings

Storefront Details

A612

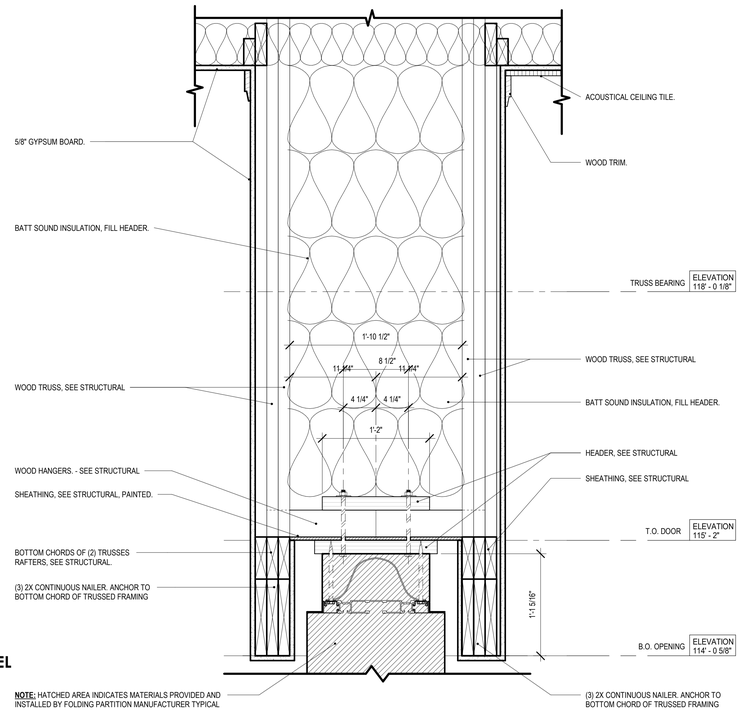

A Partition Door Head at Chapel

Scale: 1 1/2" = 1'-0"

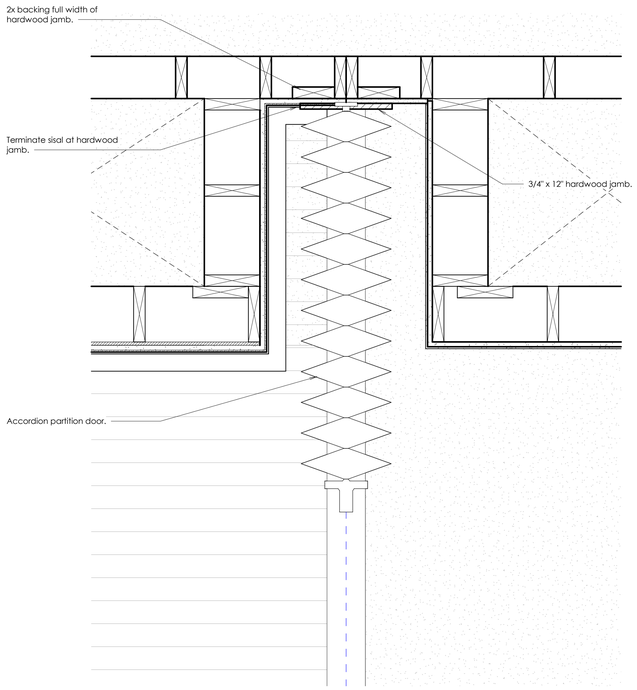

B Partition Jamb at Chapel

Scale: 1 1/2" = 1'-0"

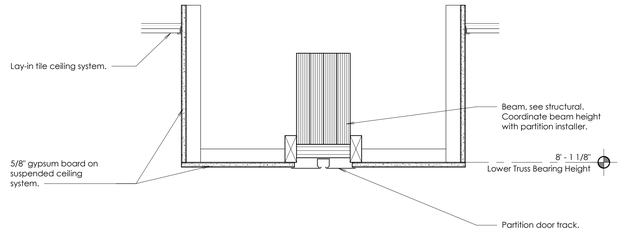

E Accordion Partition Head

Scale: 1 1/2" = 1'-0"

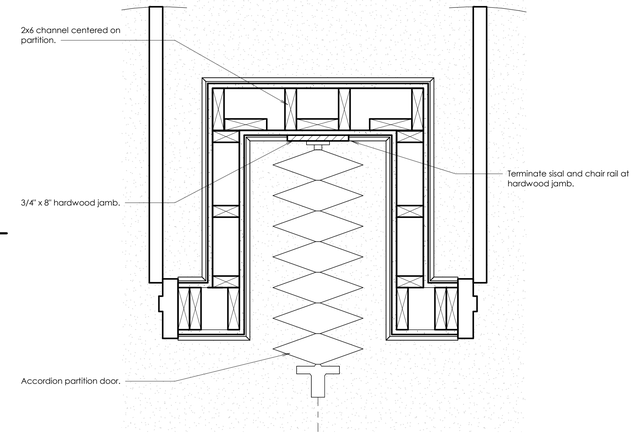

F Accordion Partition Jamb

Scale: 1 1/2" = 1'-0"

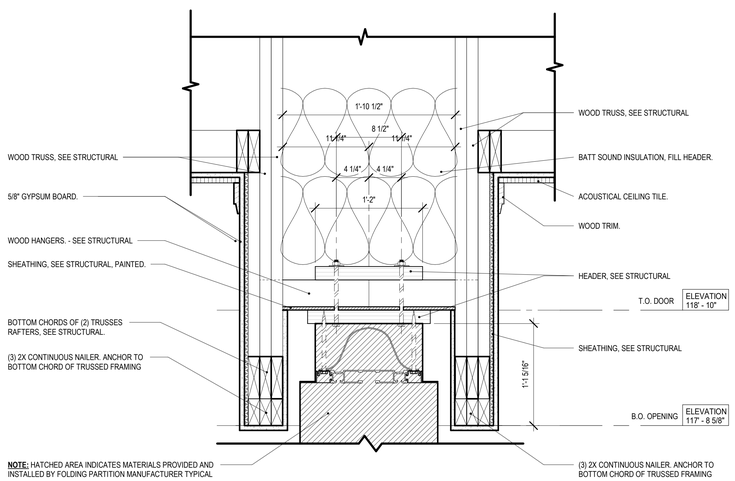

C Partition Door Head at Cultural Center

Scale: 1 1/2" = 1'-0"

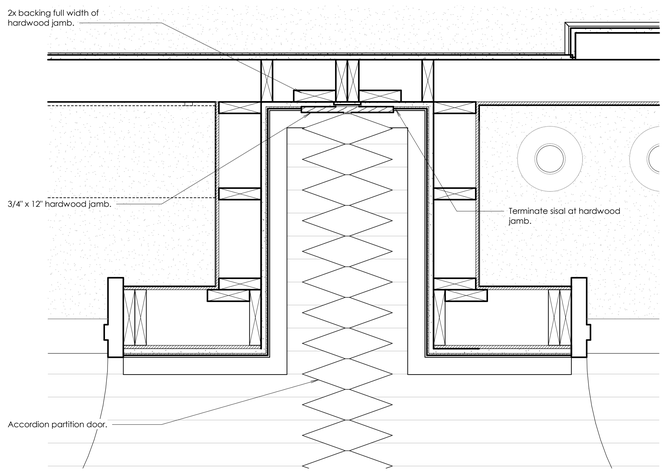

D Partition Door Jamb at Cultural Center

Scale: 1 1/2" = 1'-0"

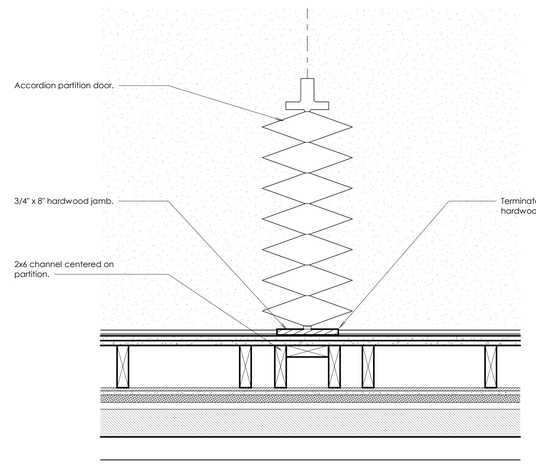

G Accordion Partition Jamb

Scale: 1 1/2" = 1'-0"

bhd ARCHITECTS
www.bhdarchitects.com
Phone 801.571.0010
Fax 801.571.0303
Toll Free 888.571.0010
65 East Wadsworth Park Drive
Suite 205 Draper, Utah 84020

LICENSED ARCHITECT Lafe Theodore Harris 15 Aug 2024 #7858878-0301 STATE OF UTAH

THE CHURCH OF JESUS CHRIST OF LATTER-DAY SAINTS

Orem YSA 3rd 10 Ward Building
Orem UT YSA 3rd Stake

Approx. 1700 West 575 South
Vineyard, Utah 84059

BHD #: 2344
Date: 13 Aug 2024
County Parcel: 59:228:0001
Plan Series: 2024 10 Ward-SC
Owner #: 590-1818

Drawing Issue and Revision Schedule

#	Date	Description
1	13 Aug 2024	Bid Drawings

Folding Partition Details

A613

Printed: 8/19/2024 10:11:40 AM

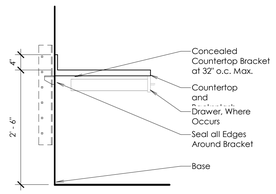

A Concealed Countertop Support
Scale: 3/4" = 1'-0"

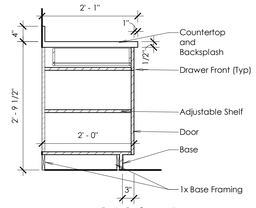

B Base Cabinet
Scale: 3/4" = 1'-0"

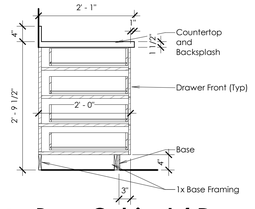

C Base Cabinet 4 Drawers
Scale: 3/4" = 1'-0"

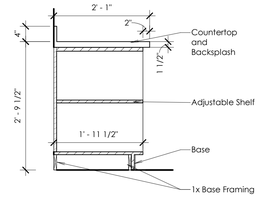

D Base Cabinet Open Shelves
Scale: 3/4" = 1'-0"

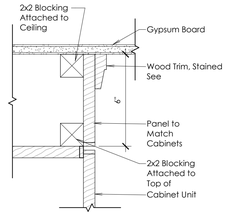

E Cabinet Soffit Detail
Scale: 3" = 1'-0"

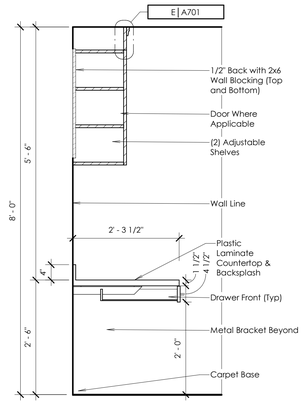

H Upper Cabinet w Counter & Drawer
Scale: 3/4" = 1'-0"

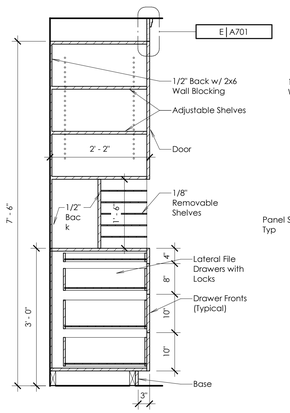

J Cabinet Section
Scale: 3/4" = 1'-0"

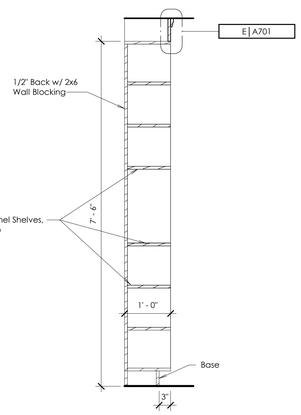

K Material Center Cabinet
Scale: 3/4" = 1'-0"

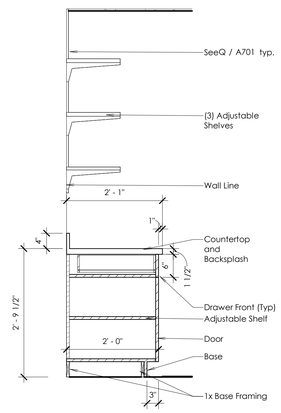

M Sacrament Prep Cabinet
Scale: 3/4" = 1'-0"

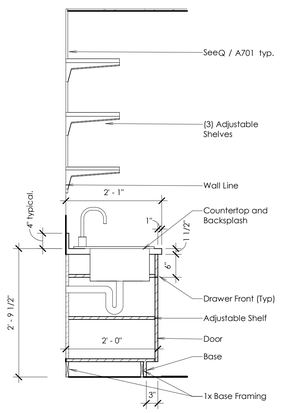

N Sacrament Prep Cabinet
Scale: 3/4" = 1'-0"

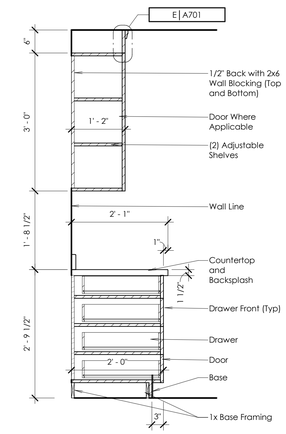

O Upper Cabinet w Base 4 Drawers
Scale: 3/4" = 1'-0"

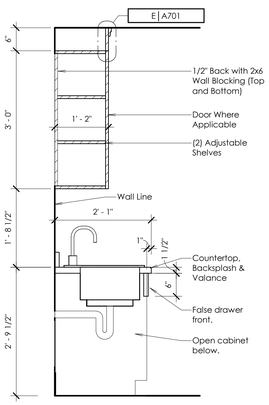

P Upper Cabinet with Sink
Scale: 3/4" = 1'-0"

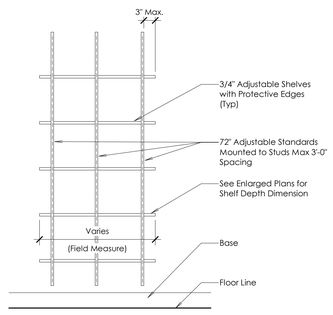

Q Open Adjustable Shelving
Scale: 3/4" = 1'-0"

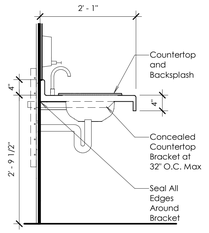

R Restroom Countertop
Scale: 3/4" = 1'-0"

bhd ARCHITECTS
www.bhdarchitects.com
Phone 801.571.0010
Fax 801.571.0303
Toll Free 888.571.0010
65 East Wadsworth Park Drive
Suite 205 Draper, Utah 84020

LICENSED ARCHITECT
Lafe Theodore Harris
15 Aug 2024
7738896-0301
STATE OF UTAH

THE CHURCH OF JESUS CHRIST OF LATTER-DAY SAINTS

Orem YSA 3rd 10 Ward Building
Orem UT YSA 3rd Stake

Approx. 1700 West 575 South
Vineyard, Utah 84059

Owner #: 590-1876
Plan Series: 2024 10 Ward SC
County Parcel: 39-228-0001
BHD #: 2344
Date: 15 Aug 2024

Drawing Issue and Revision Schedule		
#	No.	Description
1	15 Aug 2024	Bid Drawings

Casework Details

A701

8/19/2024 10:10:11 AM

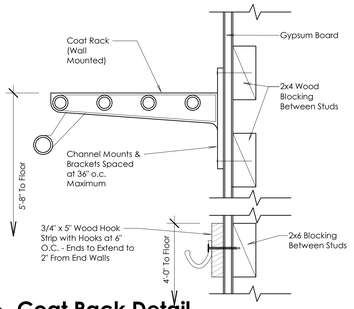

A Coat Rack Detail

Scale: 3" = 1'-0"

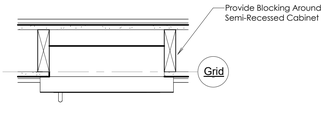

B Fire Extinguisher Cabinet

Scale: 1 1/2" = 1'-0"



C Storage Cabinet Enlarged Plan

Scale: 1/4" = 1'-0"

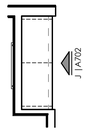

D Storage Cabinet Enlarged Plan

Scale: 1/4" = 1'-0"

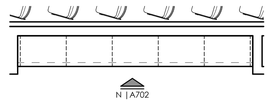

E Storage Cabinet Enlarged Plan

Scale: 1/4" = 1'-0"

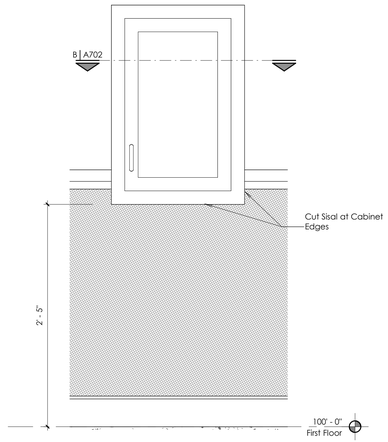

F Fire Extinguisher Cabinet

Scale: 1 1/2" = 1'-0"

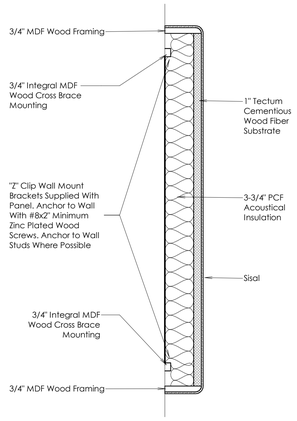

H Acoustical Panel

Scale: 1 1/2" = 1'-0"

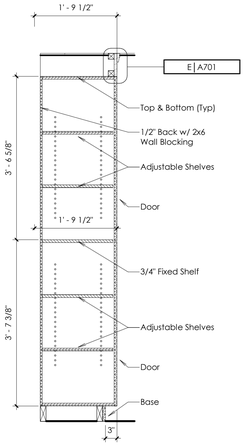

K Storage Cabinets

Scale: 3/4" = 1'-0"

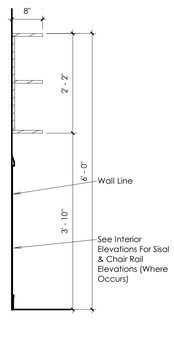

L Hymn Book Cabinet Section

Scale: 3/4" = 1'-0"

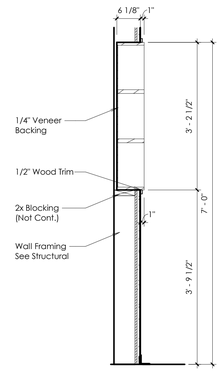

M Hymn Book Cabinet Recessed

Scale: 3/4" = 1'-0"

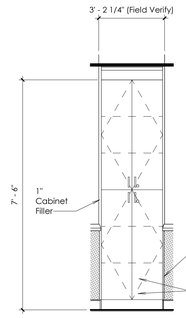

I Storage Cabinet Elevation

Scale: 1/2" = 1'-0"

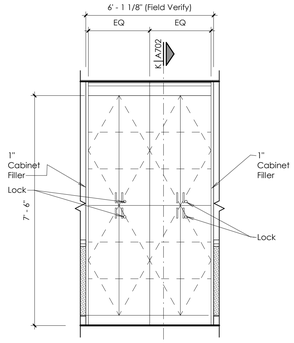

J Storage Cabinets Elevation

Scale: 1/2" = 1'-0"

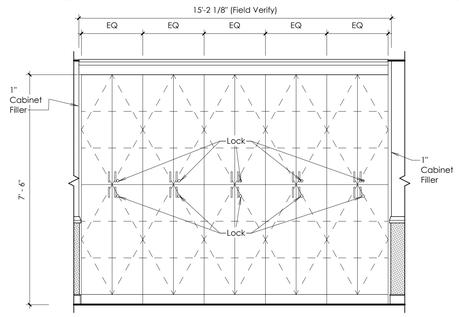

N Storage Cabinets Elevation

Scale: 1/2" = 1'-0"

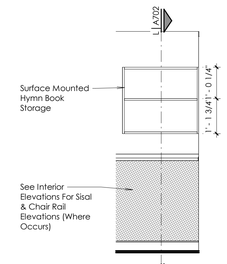

Q Hymn Book Cabinet Elevation

Scale: 1/2" = 1'-0"

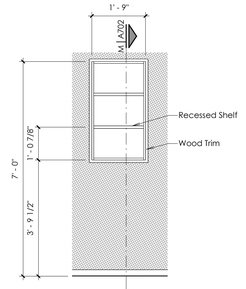

R Hymn Book Cabinet Recessed Elevation

Scale: 1/2" = 1'-0"

bhd ARCHITECTS
www.bhdarchitects.com
Phone 801.571.0010
Fax 801.571.0303
Toll Free 888.571.0010
65 East Wadsworth Park Drive
Suite 205 Draper, Utah 84020

LICENSED ARCHITECT
Lafe Theodore Harris
15 Aug 2024
#7586878-0301
STATE OF UTAH

THE CHURCH OF JESUS CHRIST OF LATTER-DAY SAINTS

Orem YSA 3rd 10 Ward Building
Orem UT YSA 3rd Stake

Approx. 1700 West 575 South
Vineyard, Utah 84059

Owner #: 590-18-16
Plan Series: 2024 10 Ward SC
County Parcel: 39-728-3001
BHD #: 2344
Date: 13 Aug 2024

Drawing Issue and Revision Schedule		
#	Date	Description
1	13 Aug 2024	Bid Drawings

Casework Details

A702

General Notes

1. Hardwood trim designation (T#) refer to 9/A709

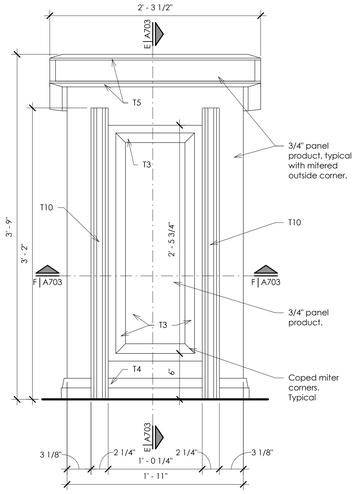

A Lectern Front Elevation

Scale: 1 1/2" = 1'-0"

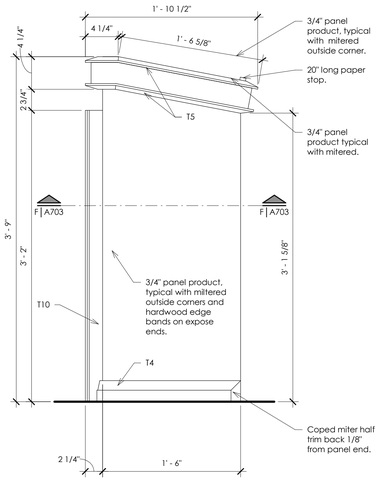

B Lectern Side Elevation

Scale: 1 1/2" = 1'-0"

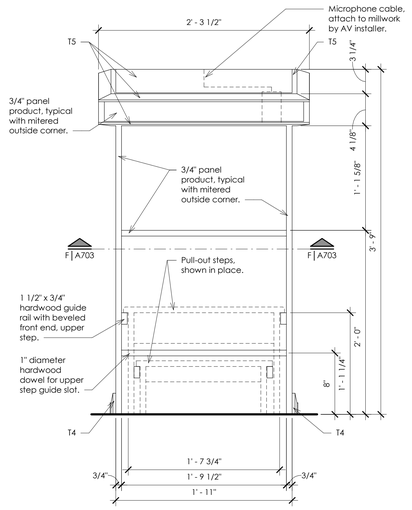

C Lectern Rear Elevation

Scale: 1 1/2" = 1'-0"

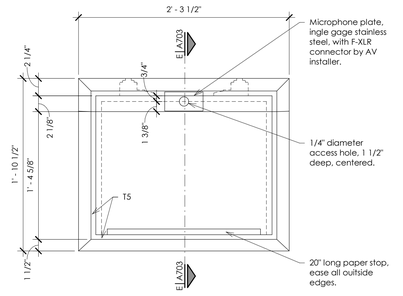

D Lectern Top

Scale: 1 1/2" = 1'-0"

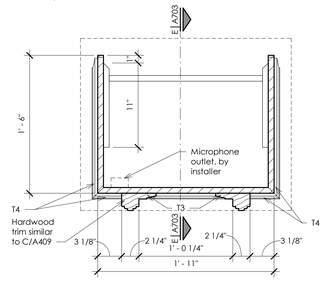

F Lectern Plan Section

Scale: 1 1/2" = 1'-0"

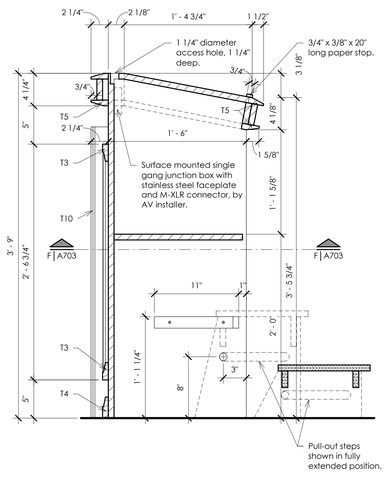

E Lectern Section

Scale: 1 1/2" = 1'-0"

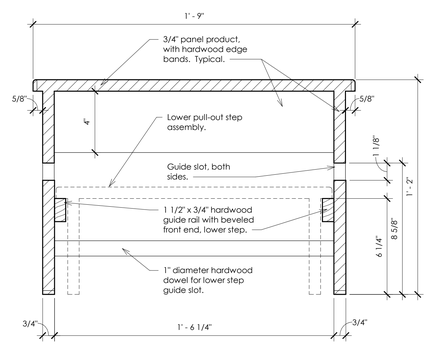

G Upper Step Section

Scale: 3" = 1'-0"

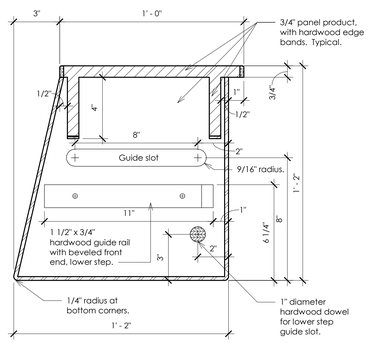

H Upper Step Section Side

Scale: 3" = 1'-0"

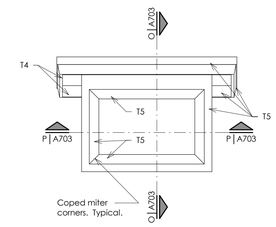

I Lectern Table Top Elevation

Scale: 1 1/2" = 1'-0"

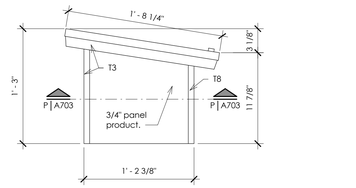

J Lectern Table Top Side Elevation

Scale: 1 1/2" = 1'-0"

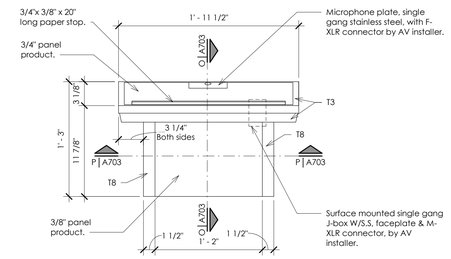

K Lectern Table Top Rear Elevation

Scale: 1 1/2" = 1'-0"

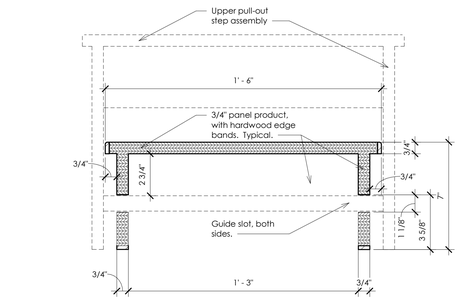

L Lower Step Section

Scale: 3" = 1'-0"

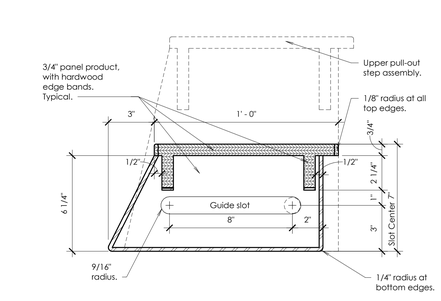

M Lower Step Section

Scale: 3" = 1'-0"

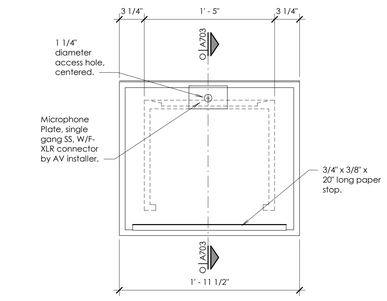

N Lectern Table Top

Scale: 1 1/2" = 1'-0"

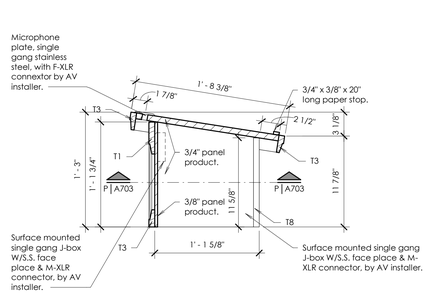

O Lectern Table Top Section

Scale: 1 1/2" = 1'-0"

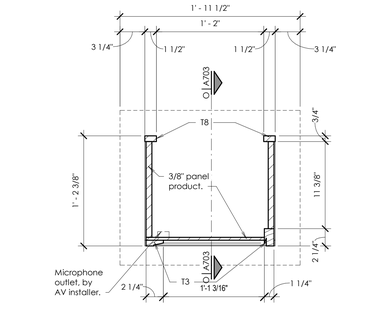

P Lectern Table Tp Plan Section

Scale: 1 1/2" = 1'-0"

bhd ARCHITECTS
www.bhdarchitects.com
Phone 801.571.0010
Fax 801.571.0303
Toll Free 888.571.0010
65 East Wadsworth Park Drive
Suite 205 Draper, Utah 84020

LICENSED ARCHITECT
Lafe Theodore Harris
15 Aug 2024
#7858878-0301
STATE OF UTAH

THE CHURCH OF JESUS CHRIST OF LATTER-DAY SAINTS

Orem YSA 3rd 10 Ward Building
Orem UT YSA 3rd Stake

Approx. 1700 West 575 South
Vineyard, Utah 84059

Owner #: 590-1818
Plan Series: 2024 10 Ward SC
County Parcel: 59-228-0001
BHD #: 2344
Date: 13 Aug 2024

Drawing Issue and Revision Schedule

#	Date	Description
1	15 Aug 2024	Bid Drawings

Lectern Details

A703

Printed 8/19/2024 9:53:19 AM

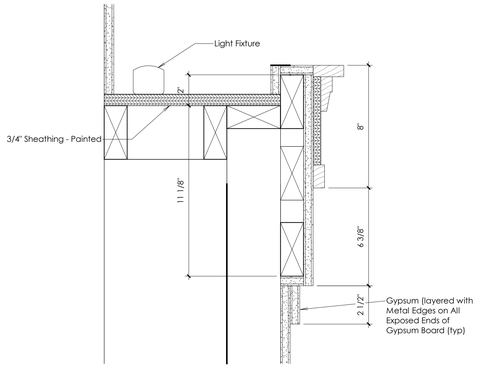

A Rostrum Center Accent Column Wall Trim Profile
Scale: 3" = 1'-0"

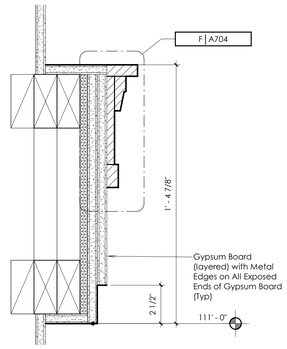

B Cove Trim Detail
Scale: 3" = 1'-0"

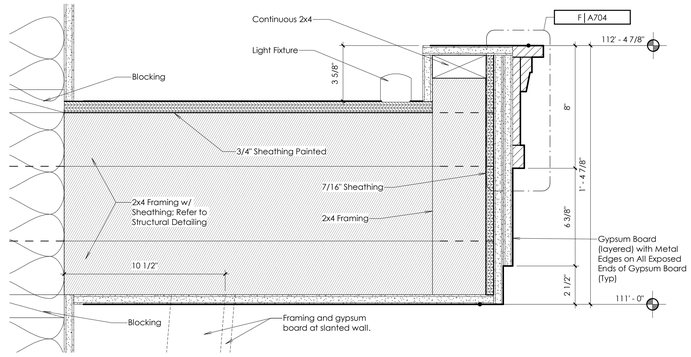

C Light Cove Trim Detail
Scale: 3" = 1'-0"

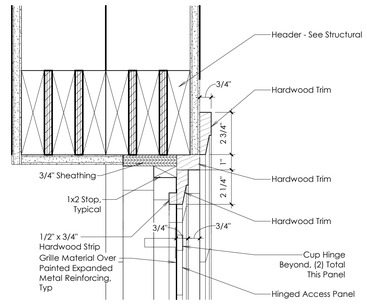

D Rostrum Center Accent Wall
Scale: 3" = 1'-0"

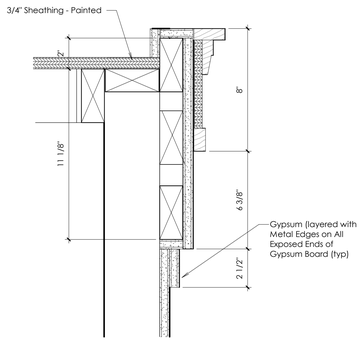

E Rostrum Side Accent Column Wall Trim Profile
Scale: 3" = 1'-0"

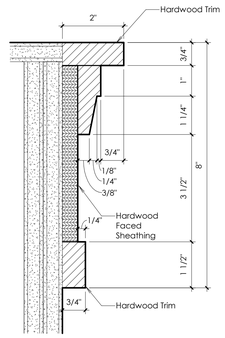

F Cove Trim Detail
Scale: 6" = 1'-0"

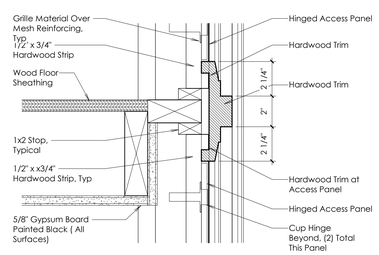

G Rostrum Center Accent Wall
Scale: 3" = 1'-0"

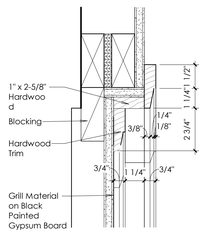

H Accent Side Wall Trim Head
Scale: 3" = 1'-0"

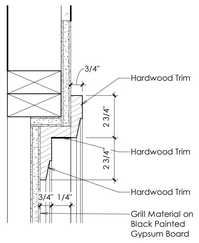

I Accent Side Wall Trim Jamb
Scale: 3" = 1'-0"

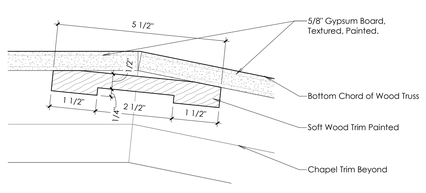

J Ceiling Drywall Reveal Detail
Scale: 6" = 1'-0"

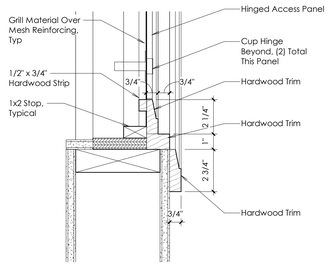

K Rostrum Center Accent Wall
Scale: 3" = 1'-0"

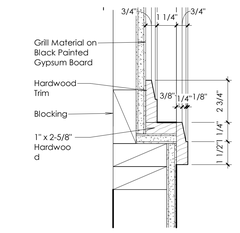

L Accent Side Wall Trim Sill
Scale: 3" = 1'-0"

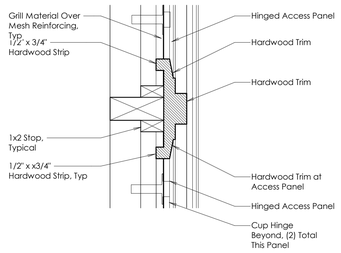

M Accent Panel Trim
Scale: 3" = 1'-0"

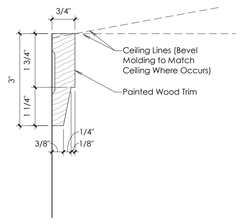

N Crown Moulding
Scale: 6" = 1'-0"

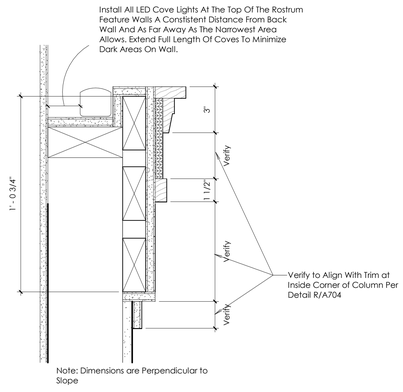

P Cove Trim Detail
Scale: 3" = 1'-0"

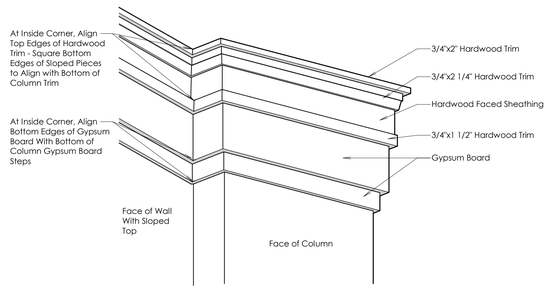

R Accent Wall Trim Connection
Scale: 3/4" = 1'-0"

bhd ARCHITECTS
www.bhdarchitects.com
Phone 801.571.0010
Fax 801.571.0303
Toll Free 888.571.0010
65 East Wadsworth Park Drive
Suite 205 Draper, Utah 84020

LICENSED ARCHITECT Lafe Theodore Harris 15 Aug 2024 #7856878-0301 STATE OF UTAH

THE CHURCH OF JESUS CHRIST OF LATTER-DAY SAINTS

Orem YSA 3rd 10 Ward Building
Orem UT YSA 3rd Stake

Approx. 1700 West 575 South
Vineyard, Utah 84059

Owner #: 590-1816
Plan Series: 2024 10 Ward SLC
County Parcel: 37-228-0001
BHD #: 2344
Date: 15 Aug 2024

Drawing Issue and Revision Schedule

#	Item	Date
1	15 Aug 2024	Bid Drawings

Miscellaneous Interior Profiles

A704

8/19/2024 9:32:35 AM

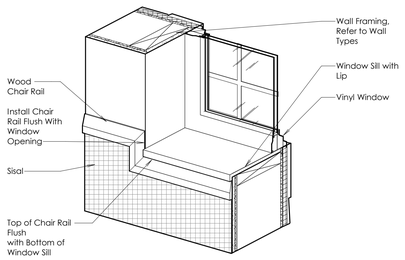

A Chair Rail at Window

Scale: 1 1/2" = 1'-0"

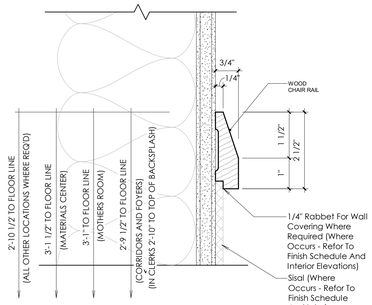

B Chair Rail Detail

Scale: 6" = 1'-0"

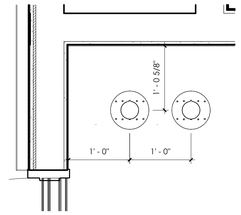

D Volleyball Post Storage Sleeves

Scale: 1" = 1'-0"

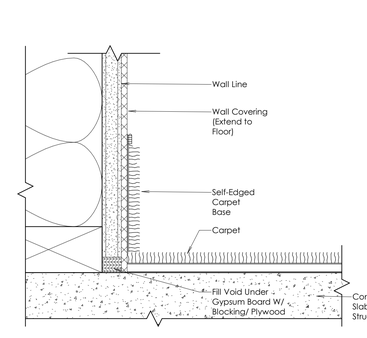

J Carpet Base Detail

Scale: 6" = 1'-0"

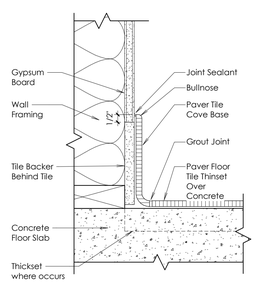

K Paver Tile Coved Base at Thinset

Scale: 3" = 1'-0"

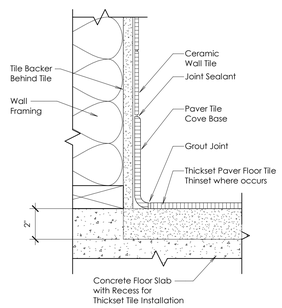

L Paver Tile Coved Base at Full Setting Bed

Scale: 3" = 1'-0"

H Typical Wall Tile Edge

Scale: 3" = 1'-0"

I Typical Volleyball Post Sleeve

Scale: 1" = 1'-0"

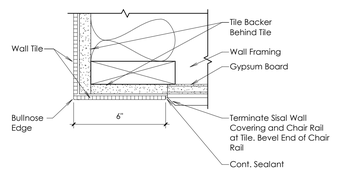

M Corner Wall Tile

Scale: 3" = 1'-0"

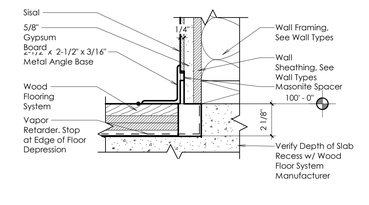

N Typical Metal Base Detail

Scale: 3" = 1'-0"

8/20/2024 12:00:19 AM

bhd ARCHITECTS
www.bhdarchitects.com
Phone 801.571.0010
Fax 801.571.0303
Toll Free 888.571.0010
65 East Wadsworth Park Drive
Suite 205 Draper, Utah 84020

LICENSED ARCHITECT Lafe Theodore Harris 15 Aug 2024 #7858878-0301 STATE OF UTAH

THE CHURCH OF JESUS CHRIST OF LATTER-DAY SAINTS

Orem YSA 3rd 10 Ward Building
Orem UT YSA 3rd Stake

Approx. 1700 West 575 South
Vineyard, Utah 84059

Owner #: 590-1876
Plan Series: 2024 10 Ward S/C
County Parcel: 37-228-0001
BHD #: 2344
Date: 15 Aug 2024

Drawing Issue and Revision Schedule

#	Date	Description
1	15 Aug 2024	Bid Drawings

Miscellaneous Interior Profiles

A705



1 Perspective
Not to Scale



2 Perspective
Scale:

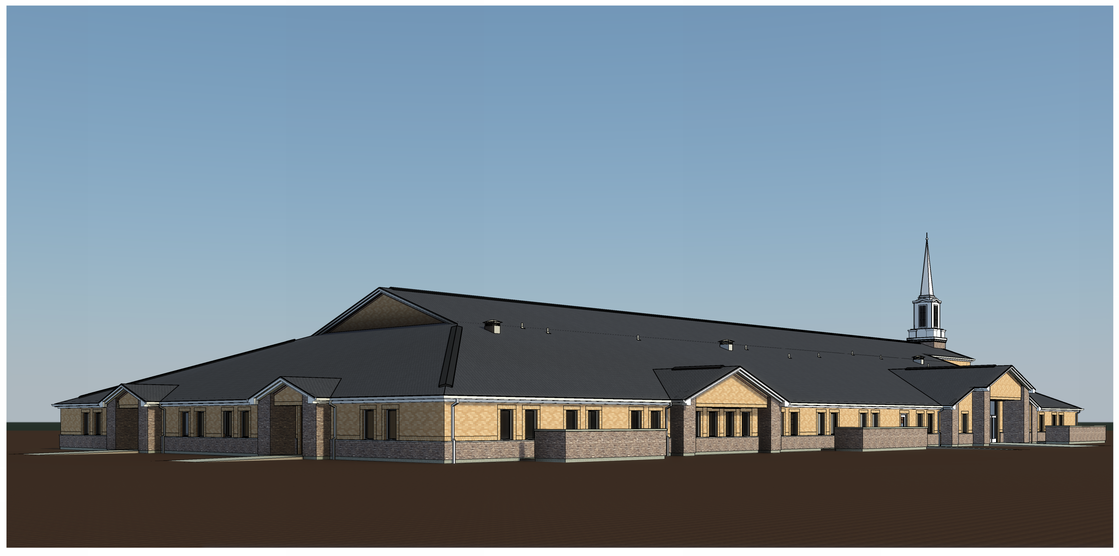

3 Perspective
Not to Scale



4 Perspective
Not to Scale

bhd ARCHITECTS
www.bhdarchitects.com
Phone 801.571.0010
Fax 801.571.0303
Toll Free 888.571.0010
65 East Wadsworth Park Drive
Suite 205 Draper, Utah 84020

LICENSED ARCHITECT
Lafe Theodore Harris
15 Aug 2024
#7585878-0301
STATE OF UTAH

THE CHURCH OF JESUS CHRIST OF LATTER-DAY SAINTS

Orem YSA 3rd 10 Ward Building
Orem UT YSA 3rd Stake

Approx. 1700 West 575 South
Vineyard, Utah 84059

Date: 15 Aug 2024
BHD #: 2344
County Parcel: 39-228-0001
Plan Series: 2024 10 Ward SLC
Owner #: 390-1876

Drawing Issue and Revision Schedule

#	Date	Description

Perspectives

A901

Printed 8/15/2024 11:11:02 AM

Drapery Dimensioning

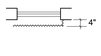

Single Window Type "F"
No Scale

The Dimension Are For Reference Only. It Is The Responsibility Of The Drapery Installation Contractor To Provide Field Measurements To Insure Proper Installation

Single Window Type "P"
No Scale

1. Length = 4" Below Window Sill to 4" Above Window Head
2. Fullness = 2 1/2 Times The Window Width
3. 4" Double Hems And Headings.
4. Stackoff of 1/3 The Window Width

Drapery Schedule

Number	Name	Area	Type	Number Required	Remarks
103	Bishop	183 SF	F and P	2	Casement
104	Bishop	183 SF	F	2	Casement
107	Room	294 SF	F	2	Casement
108	Room	458 SF	F	2	Casement
109	Room	300 SF	P	3	Casement
110	Room	458 SF	P	2	Casement
112	Room	300 SF	P	2	Casement
113	Room	460 SF	P	2	Casement
128	High Council	539 SF	P	4	Casement
132	Bishop	180 SF	F and P	2	Casement
135	Bishop	180 SF	P	1	Casement
155	Rostrum	844 SF	P	2	Casement and Blackout
160	Bishop	183 SF	F	2	Casement
163	Bishop	183 SF	F	2	Casement
164	Room	283 SF	F and P	2	Casement
165	Room	444 SF	F and P	2	Casement
166	Room	285 SF	F and P	3	Casement
167	Room	444 SF	P	2	Casement
168	Room	284 SF	P	2	Casement
169	Room	443 SF	P	2	Casement
175	Bishop	178 SF	P	2	Casement
178	Bishop	218 SF	P	2	Casement
186	Bishop	183 SF	F	2	Casement
189	Bishop	183 SF	F and P	3	Casement

Note
Provide Solid Blocking in the Walls at all Door Stops, Visual Display Boards, Toilet Compartments, Countertop & Lavatory Supports, Wall-Mounted Data Rack and at all other Equipment & Accessory Locations per Detail A/A105 .

Pew Schedule

Type Mark	Count	Pew Length	Seating Length
P1	4	5' - 3"	4' - 11"
P2	4	6' - 3"	5' - 11"
P3	8	6' - 7"	6' - 3"
P4	4	7' - 8"	7' - 4"
P5	6	7' - 9"	7' - 5"
P6	16	7' - 10"	7' - 6"
P7	2	10' - 3"	9' - 11"
P8	2	12' - 0"	11' - 8"
P9	5	18' - 6"	18' - 2"
	51		

Keyed Notes

01-5	Artwork location. Do not install any equipment or devices in this location.
01-6	Table or chair storage cart. Furnished and installed by Owner.
10-24	Wall Mounted Coat Rack, Refer to Detail A/A702.
12-2	Casement and blackout drapes. Typical.
12-4	Upholstered pews furnished and installed by Owner. Typical.
12-5	Casement drapery. Typical.
27-6	Flat Panel Televison Monitor. Refer to Audio/Visual Drawings.

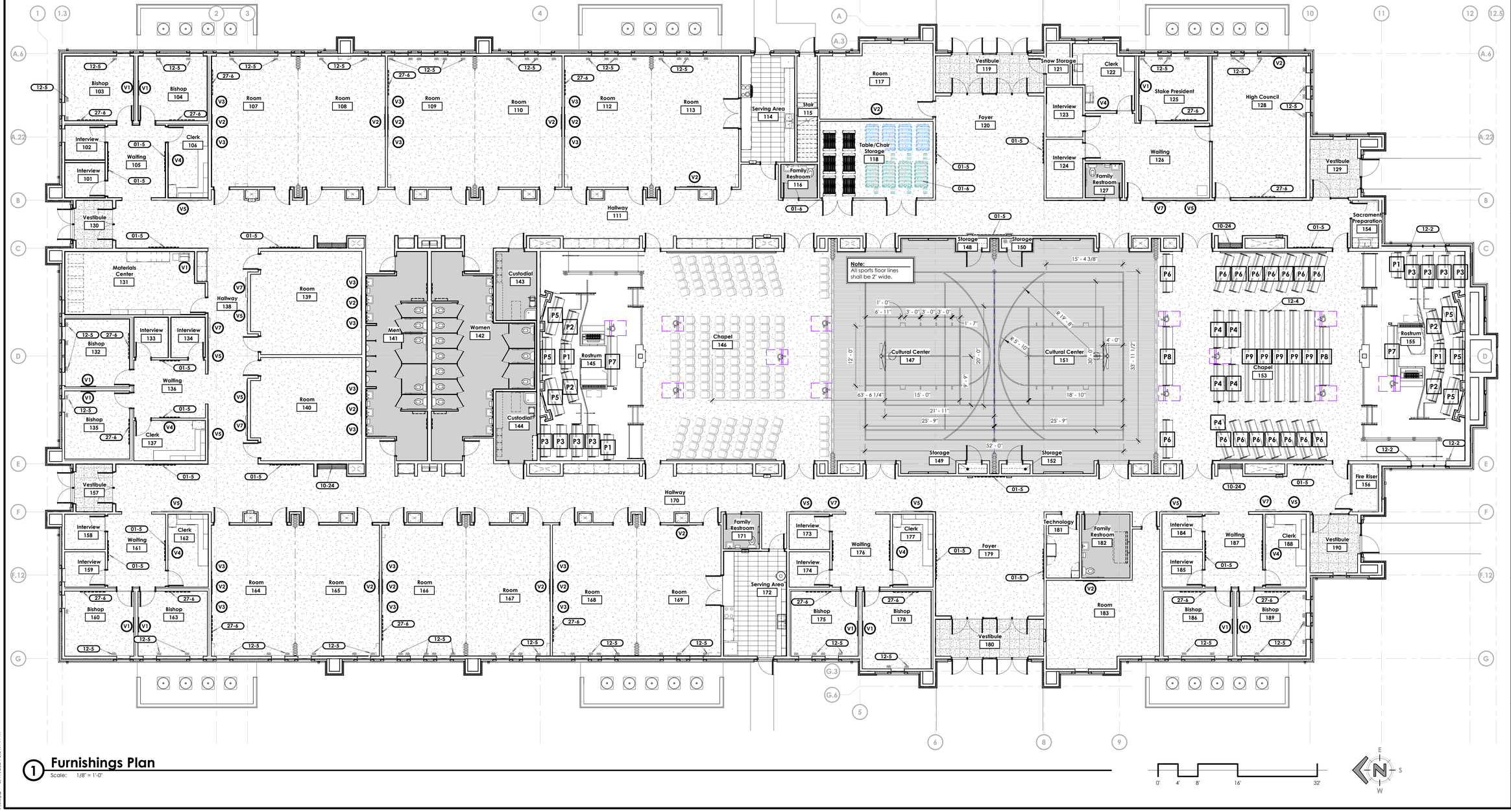

1 Furnishings Plan

Scale: 1/8" = 1'-0"

0' 4' 8' 16' 32'

bhd ARCHITECTS
www.bhdarchitects.com
Phone 801.571.0010
Fax 801.571.0303
Toll Free 888.571.0010
65 East Wadsworth Park Drive
Suite 205 Draper, Utah 84020

LICENSED ARCHITECT
Lafe Theodore Harris
15 Aug 2024
7878-0301
STATE OF UTAH

THE CHURCH OF JESUS CHRIST OF LATTER-DAY SAINTS

Orem YSA 3rd 10 Ward Building
Orem UT YSA 3rd Stake

Approx. 1700 West 575 South
Vineyard, Utah 84059

Owner #: 590-1878
Plan Series: 2024 10 Ward SC
County Parcel: 57-226-0001
BHD #: 2344
Date: 15 Aug 2024

Drawing Issue and Revision Schedule

#	Date	Description
1	15 Aug 2024	Bid Drawings

Furnishings Plan

F101

Printed: 8/17/2024 8:34:14 PM

bhd ARCHITECTS
www.bhdarchitects.com
Phone 801.571.0010
Fax 801.571.0303
Toll Free 888.571.0010
65 East Wadsworth Park Drive
Suite 205 Draper, Utah 84020

LICENSED ARCHITECT
Lafe Theodore Harris
15 Aug 2024
#7878-0301
STATE OF UTAH

THE CHURCH OF JESUS CHRIST OF LATTER-DAY SAINTS

Orem YSA 3rd 10 Ward Building
Orem UT YSA 3rd Stake

Approx. 1700 West 575 South
Vineyard, Utah 84059

Owner #: 590-1812
Plan Series: 2024 10 Ward SC
County Parcel: 59:226:0001
BHD #: 2344
Date: 13 Aug 2024

Note:
See Sheet F103 for Building Signage Schedule and Details.

Bishop 103 · Bishop 104 · Bishop's Office · Interview 102 · Bishop's Office · Interview · Clerk 106 · Interview 101 · Waiting 105 · Clerks' Office · Vestibule 130 · Exit

Room 107 · Room 108 · Room 109 · Room 110 · Room 112 · Room 113 · This room is for warming and serving food, not for cooking or preparing food. · Serving Area 114 · Stair 115 · Room 117 · Vestibule 119 · Foyer 120 · Snow Storage 121 · Clerk 122 · Interview 123 · Interview 124 · Clerks' Office · Interview · Stake President's Office · Stake President 125 · Waiting 126 · High Council · Family Restroom 127 · High Council 128 · Vestibule 129 · Exit

Maximum Occupancy: 108 · Maximum Occupancy: 109 · Maximum Occupancy: 109 · 110 · 111 · 112 · 113 · 114 · 115 · 116 · Table/Chair Storage 118 · Family Restroom 116 · Serving Area First Aid Kit · Restroom · S101 · S102

Chapel 1 · Chapel 2 · Cultural Center 1 · Cultural Center 2 · Storage 148 · Storage 150 · Restroom · Stake Offices · High Council · Sacrament Preparation · Sacrament Preparation 154

CC DD · EE FF · Men · Women · Member Custodial Closet First Aid Kit · Hallway 111 · GG HH · II JJ · KK LL · MM NN · OO PP · QQ RR · SS TT · UU VV · WW XX · YY ZZ · Custodial 143 · Custodial 144 · Listening Devices Available in the Materials Center · Maximum Occupancy: 280 · Maximum Occupancy: 405 · S103 · S105 · Maximum Occupancy: 224 · Wheelchair Space · Designated Aisle Seat

Materials Center 131 · AA BB · Listening Devices Available · Materials Center · Room 139 · Bishop 132 · Interview 133 · Interview 134 · Hallway 138 · Bishop's Office · Interview · Clerks' Office · Waiting 136 · Bishop 135 · Clerk 137 · Room 140 · Men 141 · Women 142 · Rostrum 145 · Wheelchair Space · Designated Aisle Seat · Chapel 146 · Cultural Center 147 · Cultural Center 151 · S104 · S106 · Storage 149 · Storage 152 · Chapel 153 · Rostrum 155 · Fire Riser 156

Vestibule 157 · Interview 158 · Interview 159 · Interview · Waiting · Clerks' Office · Bishop's Office · Clerk 162 · Bishop 160 · Bishop 163 · Room 164 · Room 165 · Room 166 · Room 167 · Room 168 · Room 169 · Maximum Occupancy: 104 · Maximum Occupancy: 105 · Maximum Occupancy: 104 · 102 · 103 · 104 · 105 · 106 · 107 · This room is for warming and serving food, not for cooking or preparing food. · Serving Area 172 · Family Restroom 171 · Electrical Panel · Member Custodial Closet First Aid Kit · W X · U V · S T · Q R · O P · M N · K L · I J · G H · E F · C D · A B · Serving Area First Aid Kit · Restroom · Chapel 1 · Cultural Center 1 · Hallway 170 · Technology · Restroom · Family Restroom 182 · Technology 181 · Interview 173 · Interview 174 · Interview · Waiting · Clerks' Office · Bishop's Office · Interview 176 · Clerk 177 · Foyer 179 · Vestibule 180 · Bishop 175 · Bishop 178 · Exit · Interview 184 · Interview 185 · Interview · Waiting · Clerks' Office · Bishop's Office · Clerk 188 · Vestibule 190 · Fire Riser · Room 183 · Bishop 186 · Bishop 189 · Exit

0' 4' 8' 16' 32'

1 Signage Plan
Scale: 1/8" = 1'-0"

Drawing Issue and Revision Schedule

No.	Date	Description
1	13 Aug 2024	Bid Drawings

Signage Plan

F102

Printed 8/17/2024 8:52:50 PM

Interior Building Signage Schedule

Furnish all signs with braille

Signage Text	Quantity	Size	Mounting	Plan Room #
Cabinetry Signage				
A thru ZZ (flat sign)	1 each	6" x 2"	D, E/A164	111, 138, 170
Classroom Signage				
101	1	6" x 6"	A/A164	183
102	2	6" x 6"	A/A164	169
103	2	6" x 6"	A/A164	168
104	2	6" x 6"	A/A164	167
105	2	6" x 6"	A/A164	166
106	2	6" x 6"	A/A164	165
107	2	6" x 6"	A/A164	164
108	2	6" x 6"	A/A164	140
109	2	6" x 6"	A/A164	139
110	2	6" x 6"	A/A164	107
111	2	6" x 6"	A/A164	108
112	2	6" x 6"	A/A164	109
113	2	6" x 6"	A/A164	110
114	2	6" x 6"	A/A164	112
115	2	6" x 6"	A/A164	113
116	1	6" x 6"	A/A164	117
Miscellaneous Signs				
Bishop's Office - Ward Name	10	6" x 6"	A/A164	103, 104, 132, 135, 160, 163, 175, 178, 186, 189
Chapel 1	4	6" x 6"	A/A164	146
Chapel 2	4	6" x 6"	A/A164	153
Clerks' Office	6	6" x 6"	A/A164	106, 122, 137 162, 177, 188
Cultural Center 1	2	6" x 6"	A/A164	147
Cultural Center 2	2	6" x 6"	A/A164	151
Electrical Panel	1	6" x 6"	B/A164	144
Exit (raised characters)	8	6" x 6"	A/A164	120, 129, 130, 156, 157, 180
Fire Riser	1	6" x 6"	A/A164	156
Fire Riser (Exterior red over white gravoply)	1	4" x 6"	C/A164	156 (on the stone outside Vestibule 190)
High Council	2	6" x 6"	A/A164	149
Interview	12	6" x 6"	A/A164	101, 102, 123, 124, 133, 134, 158, 159, 173, 174, 184, 185
Listening Devices Available in Materials Center	2	6" x 6"	B/A164	146, 153
Listening Devices Available	1	6" x 6"	B/A164	131
Materials Center	1	6" x 6"	B/A164	131
Member Custodial Closet First Aid Kit	2	6" x 6"	A/A164	143, 144
Men	2	6" x 6"	A/A164	141
Women	2	6" x 6"	A/A164	142
Restroom	4	6" x 6"	A/A164	116, 127, 171, 182
Serving Area	2	6" x 6"	A/A164	114, 172
Stake President's Office	1	6" x 6"	A/A164	125
Sacrament Preparation Room	1	6" x 6"	A/A164	154
Stake Offices	1	6" x 6"	A/A164	126
Technology	2	6" x 6"	A/A164	105
Pew-mounted Wheelchair Space sign (see detail for sign appearance)	7	3" x 3"	G/A164	145, 153, 155
Pew-mounted Designated Aisle Seat sign (see detail for sign appearance)	4	3" x 6"	G/A164	145, 153, 155
This room is for warming and serving food, not for cooking or preparing food.	2	6" x 6"	Mount above the backsplash on the wall to the left of the range.	114, 172
Occupancy Signage				
Maximum Occupancy 108 when both rooms are combined	1	6" x 6"	A/A164	107
Maximum Occupancy 109 when both rooms are combined	1	6" x 6"	A/A164	109
Maximum Occupancy 109 when both rooms are combined	1	6" x 6"	A/A164	112
Maximum Occupancy 280	1	6" x 6"	A/A164	146
Maximum Occupancy 405 when both rooms are combined	1	6" x 6"	A/A164	147
Maximum Occupancy 224	1	6" x 6"	A/A164	153
Maximum Occupancy 104 when both rooms are combined	1	6" x 6"	A/A164	164
Maximum Occupancy 105 when both rooms are combined	1	6" x 6"	A/A164	166
Maximum Occupancy 104 when both rooms are combined	1	6" x 6"	A/A164	168
Storage Room Signage				
S101	2	6" x 6"	A/A164	118
S102	1	6" x 6"	A/A164	121
S103	1	6" x 6"	A/A164	148
S104	1	6" x 6"	A/A164	149
S105	1	6" x 6"	A/A164	150
S106	1	6" x 6"	A/A164	152

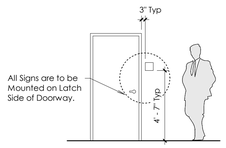

A Molded Sign Mounting

Scale: 1/4" = 1'-0"

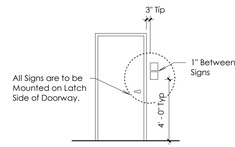

B Double Molded Sign Mounting

Scale: 1/4" = 1'-0"

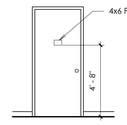

C Flat Sign Mounting on Door

Scale: 1/4" = 1'-0"

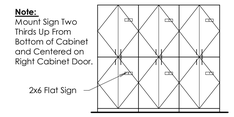

D Flat Sign Mounting On Cabinet

Scale: 1/4" = 1'-0"

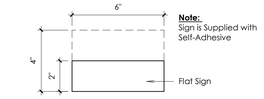

E Flat Sign Detail

Scale: 3" = 1'-0"

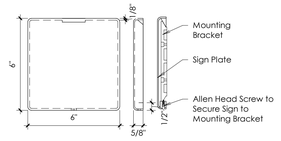

F Sign Plate Detail

Scale: 3" = 1'-0"

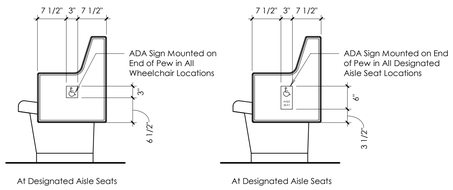

H ADA Sign Mounting On Pew

Scale: 3/4" = 1'-0"

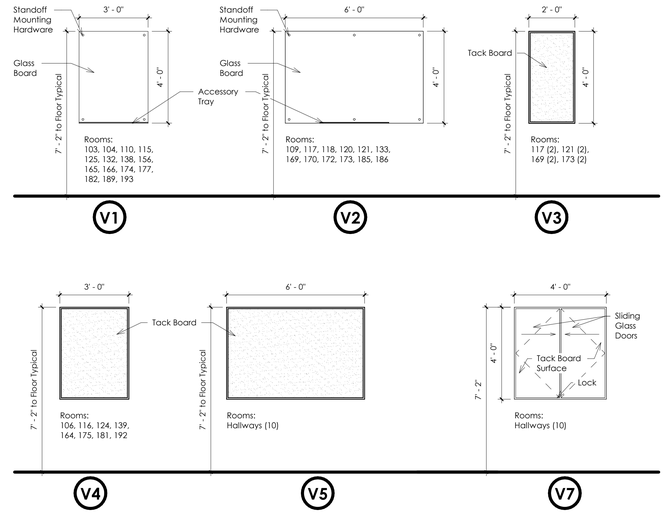

Note:
Leave 1" space between boards when installing tack boards next to glass boards

Visual Display Boards

Scale: 3/8" = 1'-0"

bhd ARCHITECTS
www.bhdarchitects.com
Phone 801.571.0010
Fax 801.571.0303
Toll Free 888.571.0010
65 East Wadsworth Park Drive
Suite 205 Draper, Utah 84020

LICENSED ARCHITECT Lafe Theodore Harris 15 Aug 2024 7975878-0301 STATE OF UTAH

THE CHURCH OF JESUS CHRIST OF LATTER-DAY SAINTS

Orem YSA 3rd 10 Ward Building
Orem UT YSA 3rd Stake

Approx. 1700 West 575 South
Vineyard, Utah 84059

Date: 15 Aug 2024
BHD #: 2344
County Parcel: 59:228:0001
Plan Series: 2024 10 Ward-SC
Owner #: 590-18-6

Drawing Issue and Revision Schedule

#	Date	Description
1	15 Aug 2024	Bid Drawings

Interior Signage and Display Board Details

F103

Printed 8/17/2024 8:31:25 PM

FOOTING AND FOUNDATION NOTES:

1. SEE SHEET S602 FOR FOOTING SCHEDULE AND CONCRETE FOUNDATION WALL SCHEDULE.
2. VERIFY ALL DIMENSIONS AND NOTIFY ARCHITECT AND ENGINEER OF DISCREPANCIES FOUND.
3. INTERIOR CONCRETE FLOOR SLAB ON GRADE TO BE 4" THICK WITH #4 BARS AT 18" ON CENTER EACH WAY WITH 1" CLEAR TO TOP SURFACE.
4. NO CONTROL JOINTS ALLOWED IN INTERIOR CONCRETE SLAB ON GRADE UNLESS APPROVED BY ARCHITECT.
5. FINISH FLOOR ELEVATION IS 100'-0".
6. SEE DETAIL 1/S501 FOR PIPES PERPENDICULAR AND PARALLEL TO FOOTING DETAIL.
7. SEE DETAIL 2/S501 FOR TYPICAL REINFORCING AT INTERSECTIONS IN CONCRETE WALLS.
8. SEE DETAIL 3/S501 FOR SILL PLATES BOLTING DETAIL.
9. SEE DETAIL 4/S501 FOR TYPICAL STEPPED FOOTING DETAIL.
10. SEE DETAIL 9/S501 FOR TYPICAL SLAB ON GRADE DETAIL.
11. DEPRESS FLOOR SLAB AS SHOWN ON PLANS FOR TILE/WOOD FLOOR SYSTEM. SEE 5/S501, 10/S501 AND 11/S501 FOR DETAIL AT STEP IN SLAB. REFER TO ARCHITECTURAL DRAWINGS FOR DIMENSIONS.
12. RECESS FOUNDATION WALL 8" AT DOORWAYS AND POUR SLAB THRU OPENING. SEE 8/S503.
13. SEE DETAIL 8/S501 AND 12/S503 WHERE SPOT FOOTINGS AND CONTINUOUS FOOTINGS ARE POURED AT DIFFERENT TIMES.
14. SEE DETAIL 1/S504 FOR TYPICAL FOOTING OVER COMPACTED STRUCTURAL FILL.
15. ALL DIMENSIONS TO STUD WALL ARE TO FACE OF STUD WALL AND NOT TO SHEATHING.
16. SPOT FOOTINGS ARE TO BE CENTERED UNDER COLUMN OR HOLDOWN.
17. SEE CIVIL DRAWINGS FOR MECHANICAL ENCLOSURE.
18. TOP OF FOOTING 98'-0" TYPICAL UNLESS NOTED OTHERWISE AT ALL EXTERIOR FOOTINGS.
19. TOP OF FOOTING 99'-6" TYPICAL UNLESS NOTED OTHERWISE AT ALL INTERIOR FOOTINGS.

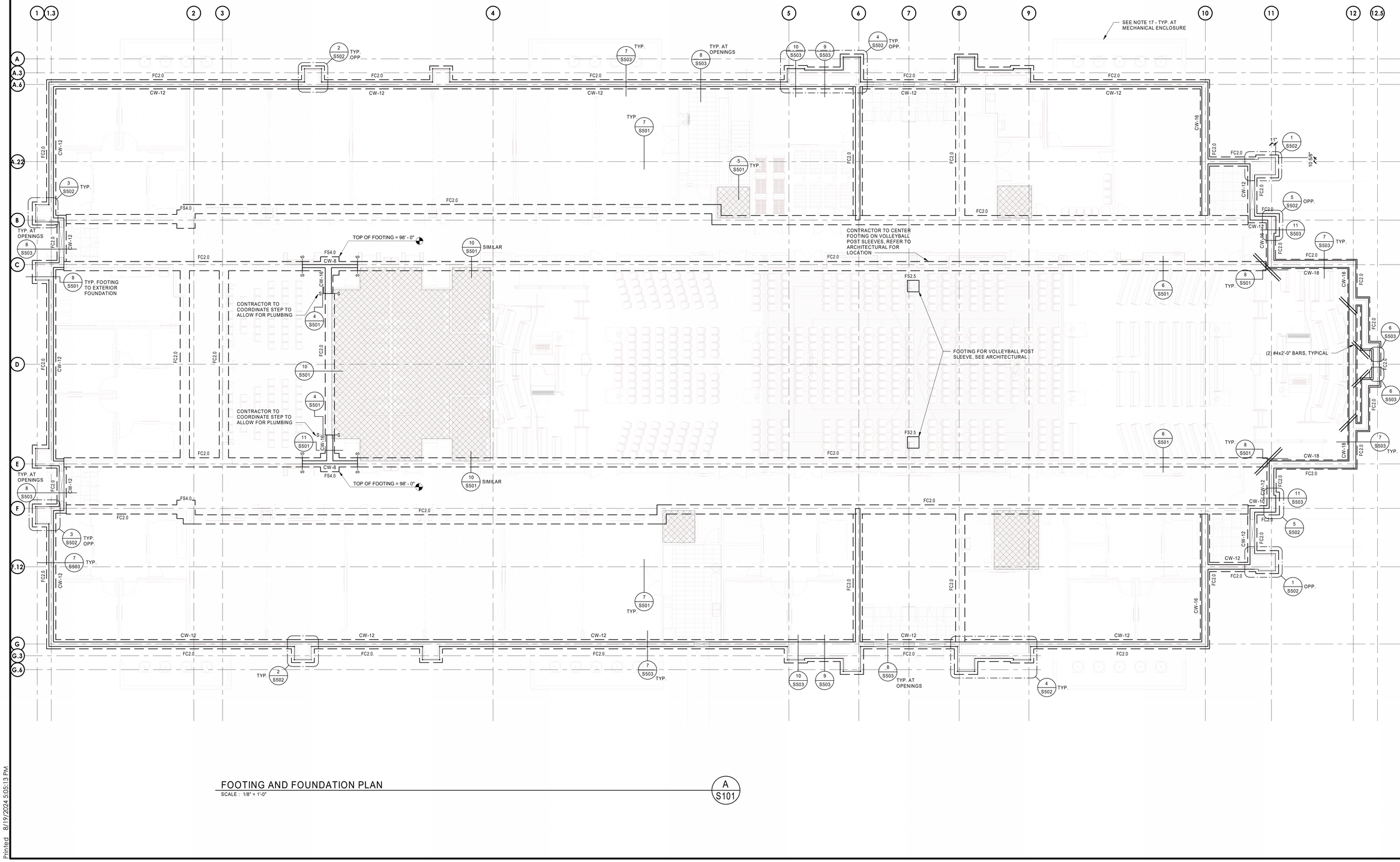

FOOTING AND FOUNDATION PLAN

SCALE : 1/8" = 1'-0"

A S101

bhd ARCHITECTS
www.bhdarchitects.com
Phone 801.571.0010
Fax 801.571.0303
Toll Free 888.571.0010
65 East Wadsworth Park Drive
Suite 205 Draper, Utah 84020

Matthew C. McBride No. 353893 8/14/24 STATE OF UTAH

THE CHURCH OF JESUS CHRIST OF LATTER-DAY SAINTS

Orem YSA 3rd 10 Ward Building
Orem UT YSA 3rd Stake

Approx. 1700 West 575 South
Vineyard, Utah 84059

Date: 15 Aug 2024 | BHD #: 2344 | County Parcel: 59:228:0001 | Plan Series: 2024 10 Ward 3C | Owner #: 396-1876

Drawing Issue and Revision Schedule

#	Description
1	15 Aug 2024 Bid Documents

FOOTING AND FOUNDATION PLAN

S101

ANCHOR BOLT, HOLDOWN AND WALL-TYPE PLAN NOTES:

1. SEE DETAIL 1/S521 FOR TYPICAL TOP PLATE SPLICE DETAIL.
2. SEE DETAIL 2/S521 FOR TYPICAL TOP PLATE SPLICE PENETRATION SCHEDULE.
3. SEE DETAIL 3/S521 AND DETAIL 4/S521 FOR TYPICAL WALL PENETRATIONS.
4. SEE WOOD BEAM SCHEDULE ON SHEET S603 FOR BUILT-UP BEAM INFORMATION.
5. SEE SCHEDULES ON S603 AND S604 FOR WALL, ROOF, FLOOR SHEATHING AND NAILING REQUIREMENTS.
6. FOR UNMARKED INTERIOR HEADERS, USE (3) 2x6 FOR 2x6 WALLS, AND (2) 2x6 FOR 2x4 WALLS. USE (1) BEARING AND (1) KING STUD.
7. SEE DETAILS 6/S521, 7/S521 AND 9/S521 FOR BRACING AT NON-STRUCTURAL WALLS.
8. SEE SHEET S503 FOR ANCHOR AND HOLDOWN DETAIL AND SCHEDULES.
9. SEE SHEET S603 FOR STRUCTURAL WOOD WALL SCHEDULE.
10. SEE SHEET S502 FOR ADDITIONAL FOOTING AND FOUNDATION WALL INFORMATION AT WALL POP-OUTS.
11. SEE ARCHITECTURAL FOR NON-STRUCTURAL WALLS.
12. SEE LEGEND ON S601 FOR SYMBOLS AND ABBREVIATIONS.
13. WOOD SHEATHING APPLIED ON OUTSIDE FACE OF ALL EXTERIOR WALLS.
14. WALLS TO BE PLATFORM FRAMED PER DETAIL 9/S514. MAXIMUM HEIGHT OF EACH PLATFORM LEVEL IS 10'-0".
15. INTERIOR WALLS OF THE CULTURAL HALL ARE TO BE SHEATHED. PLEASE COORDINATE EXTENT OF INTERIOR SHEATHING WITH THE ARCHITECTURAL DRAWINGS.

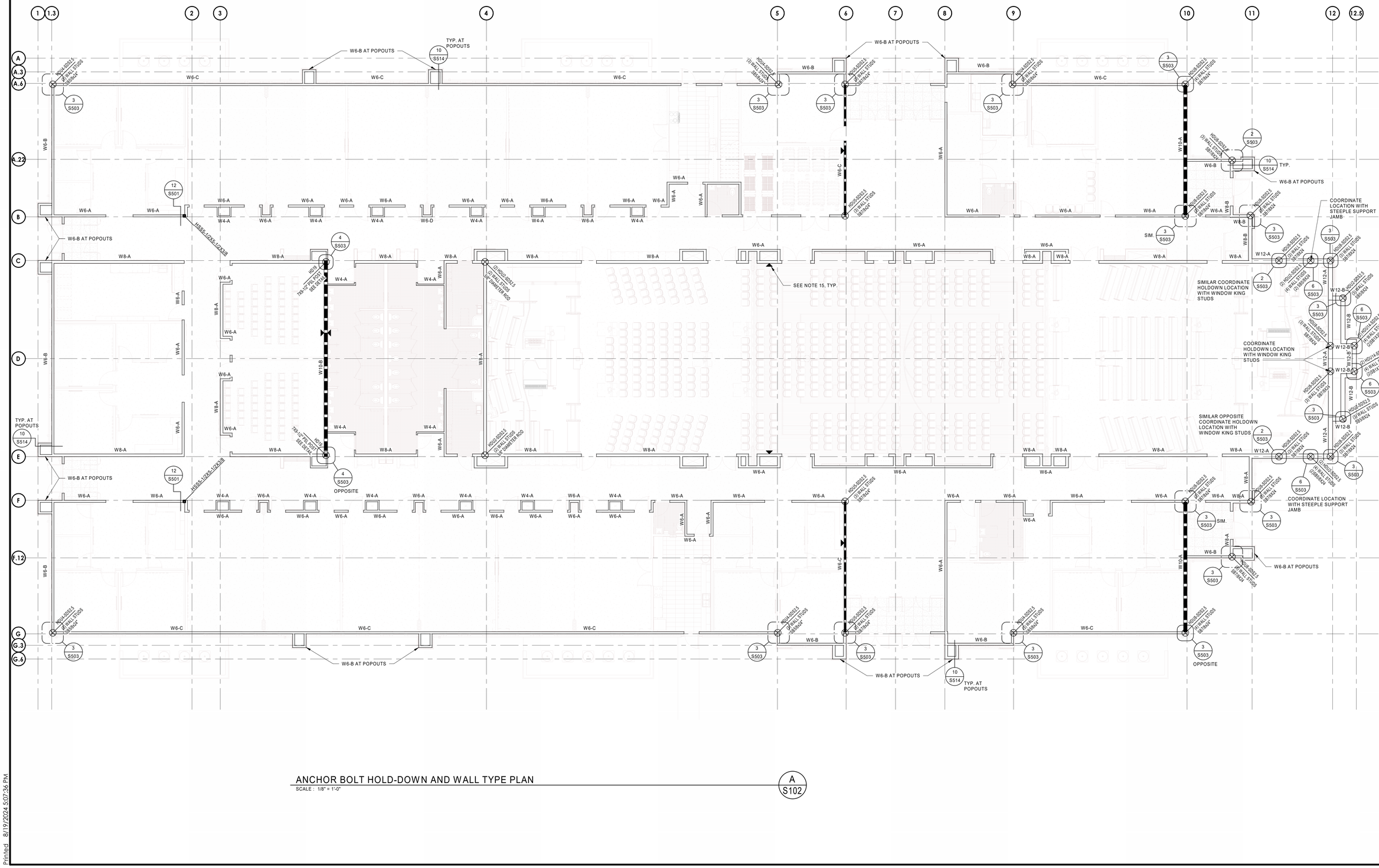

ANCHOR BOLT HOLD-DOWN AND WALL TYPE PLAN

SCALE : 1/8" = 1'-0"

A S102

bhd ARCHITECTS
www.bhdarchitects.com
Phone 801.571.0010
Fax 801.571.0303
Toll Free 888.571.0010
65 East Wadsworth Park Drive
Suite 205 Draper, Utah 84020

Matthew C. McBride No. 353893 8/14/24 STATE OF UTAH

THE CHURCH OF JESUS CHRIST OF LATTER-DAY SAINTS

Orem YSA 3rd 10 Ward Building
Orem UT YSA 3rd Stake

Approx. 1700 West 575 South
Vineyard, Utah 84059

Date: 15 Aug 2024 | BID #: 2344 | County Parcel: 39-228-0001 | Plan Series: 2024 10 Ward SC | Owner #: 390-1876

Drawing Issue and Revision Schedule

#	Date	Description
1	15 Aug 2024	Bid Documents

ANCHOR BOLT HOLDOWN AND WALL TYPE PLAN

S102

C:\Users\jacksonp\Documents\S-23738-Orem YSA Custom-2025_jacksonpQEMB2.rvt
Printed 8/19/2024 5:07:36 PM

ROSTRUM FRAMING AND PLATFORM FRAMING PLAN NOTES:

1. SEE FRAMING SCHEDULES ON SHEET S604 FOR FLOOR SHEATHING AND NAILING REQUIREMENTS.
2. SEE ARCHITECTURAL FOR DIMENSIONS AND ELEVATIONS.

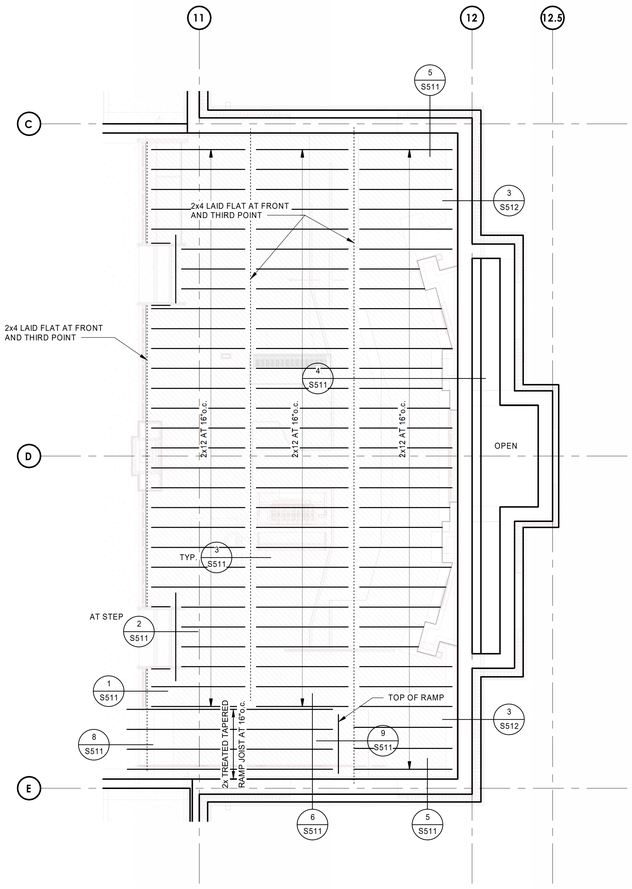

ROSTRUM FRAMING PLAN 1
SCALE : 1/4" = 1'-0"
A1 S103

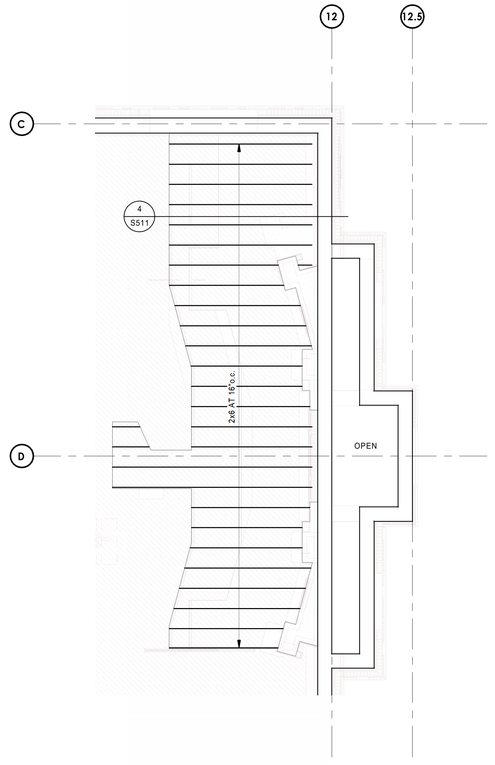

ROSTRUM FRAMING PLAN 2
SCALE : 1/4" = 1'-0"
A2 S103

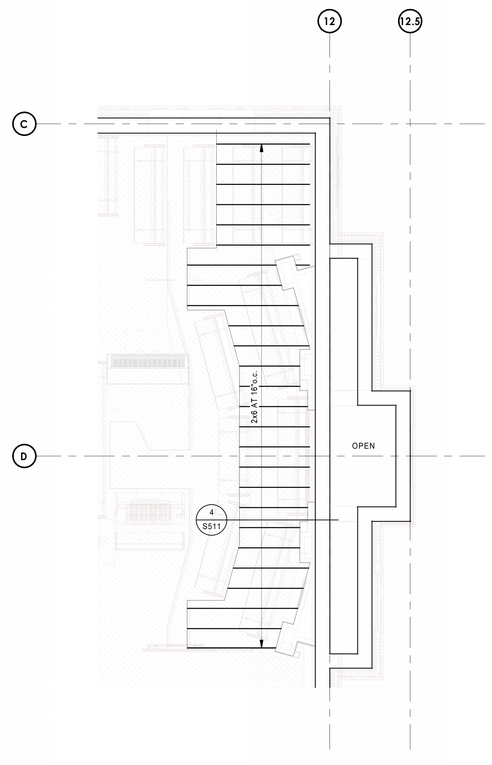

ROSTRUM FRAMING PLAN 3
SCALE : 1/4" = 1'-0"
A3 S103

ROSTRUM LOADING
DEAD LOAD = 15 psf
LIVE LOAD = 100 psf
TOTAL LOAD = 115 psf

bhd ARCHITECTS
www.bhdarchitects.com
Phone 801.571.0010
Fax 801.571.0303
Toll Free 888.571.0010
65 East Wadsworth Park Drive
Suite 205 Draper, Utah 84020

REGISTERED PROFESSIONAL ENGINEER Matthew C. McBride No. 353893 8/14/24 STATE OF UTAH

THE CHURCH OF JESUS CHRIST OF LATTER-DAY SAINTS

Orem YSA 3rd 10 Ward Building
Orem UT YSA 3rd Stake

Approx. 1700 West 575 South
Vineyard, Utah 84059

Date: 15 Aug 2024 | BHD #: 2344 | County Parcel: 39-228-0001 | Plan Series: 2024 10 Ward SC | Owner #: 590-1876

Drawing Issue and Revision Schedule

#	Date	Description
1	15 Aug 2024	Bid Documents

ROSTRUM FRAMING PLANS

S103

C:\Users\jacksonp\Documents\S-23738-Orem YSA Custom-2025_jacksonpQEMB2.rvt
Printed 8/19/2024 5:07:39 PM



EQUIPMENT PLATFORM FRAMING PLAN NOTES

1. SEE FRAMING SCHEDULES ON SHEET S604 FOR FLOOR SHEATHING AND NAILING REQUIREMENTS.
2. SEE ARCHITECTURAL FOR DIMENSIONS AND ELEVATIONS.
3. (3) TOP PLATES TO BE CONTINUOUS THROUGH OPENING. SEE DETAIL 5/S512.
4. CONTRACTOR TO REFER TO THE ELECTRICAL DRAWINGS TO COORDINATE FRAMING LAYOUT WITH THE LIGHTING LAYOUT.
5. SHEATH INSIDE OF WALL BETWEEN GLULAMS FOR STABILITY OF BEAMS ABOVE.
6. WHERE DUCTING PENETRATES A BEARING WALL, USE DETAIL 11/S514.

EQUIPMENT PLATFORM LOADING
DEAD LOAD = 15 psf
LIVE LOAD = 40 psf
TOTAL LOAD = 55 psf

EQUIPMENT PLATFORM FRAMING PLAN
SCALE : 1/8" = 1'-0"

A S104

bhd ARCHITECTS
www.bhdarchitects.com
Phone 801.571.0010
Fax 801.571.0303
Toll Free 888.571.0010
65 East Wadsworth Park Drive
Suite 205 Draper, Utah 84020

PROFESSIONAL ENGINEER — Matthew C. McBride No. 353893 — 8/14/24 — STATE OF UTAH

THE CHURCH OF JESUS CHRIST OF LATTER-DAY SAINTS

Orem YSA 3rd 10 Ward Building
Orem UT YSA 3rd Stake

Approx. 1700 West 575 South
Vineyard, Utah 84059

Owner #: 390-187-6
Plan Series: 2024 10 Ward SC
County Parcel: 39:228:0001
BHD #: 2344
Date: 15 Aug 2024

Drawing Issue and Revision Schedule

#	Date	Description
1	15 Aug 2024	Bid Documents

EQUIPMENT PLATFORM FRAMING PLAN

S104

C:\Users\jacksonp\Documents\S-23738-Orem YSA Custom-2025_jacksonpQEMB2.rvt
Printed 8/19/2024 5:07:44 PM

ROOF FRAMING PLAN NOTES:

1. SEE DETAIL 1/S521 FOR TYPICAL TOP PLATE SPLICE DETAIL.
2. SEE DETAIL 2/S521 FOR TOP PLATE SPLICE SCHEDULE FOR PIPES THAT PENETRATE TOP PLATES.
3. SEE DETAILS 3/S521 AND 4/S521 FOR WALL PENETRATIONS.
4. SEE WOOD BEAM SCHEDULE ON S603 FOR BUILT-UP BEAM DETAIL.
5. SEE SCHEDULE ON SHEETS S603 AND S604 FOR WALL, ROOF, FLOOR SHEATHING AND NAILING REQUIREMENTS.
6. SEE ARCHITECTURAL PLANS FOR ROOF AND BEARING ELEVATIONS.
7. FOR UNMARKED INTERIOR HEADERS, USE (3) 2X6 FOR 2X6 WALLS AND (2) 2X6 FOR 2X4 WALLS. USE (1) BEARING AND (1) KING STUD.
8. SEE DETAILS 6/S521, 7/S521, AND 9/S521 FOR BRACING AT NON-STRUCTURAL WALLS.
9. ALL TRUSSES SPACED AT 2'-0"o.c.
10. ADD 750# POINT LOAD TO EACH OF (6) TRUSSES SUPPORTING BASKETBALL STANDARD.
11. (2) 2X12 x 12'-0" LONG SUPPORTS WITH (2) 19/32" WOOD FILLERS.
12. GIRDER TRUSS PER MANUFACTURER, SEE TRUSS PROFILE, FOR LOADING DIAGRAMS PER MARK. PROVIDE ONE BEARING STUD PER PLY UNDER TRUSS AT BEARING LOCATIONS.
13. TYPE 1 BLOCKED DIAPHRAGM, SEE SCHEDULE E/S604.
14. 2-PLY MINIMUM DRAG TRUSS. TRUSS MANUFACTURER FOR DESIGN TRUSS FOR 300 PLF ASD. ALIGN FACE OF 2-PLY TRUSS WITH NON-SHEATHED SIDE OF SHEAR WALL.
15. TOP PLATE NOT CONTINUOUS THROUGH PARTITION DOOR POCKET.
16. INDICATES OVERBUILD REGIONS.
17. INDICATES SNOW DRIFT REGIONS. TRUSS DESIGNER TO APPLY SNOW DRIFT TO THE TRUSS PROFILES IN ACCORDANCE WITH THE LOAD COMBINATIONS OUTLINED IN ASCE 7-16. SEE INDIVIDUAL TRUSS SHEETS FOR ADDITIONAL LOADING TO EACH TRUSS.

ROOF PLAN
SCALE : 1/8" = 1'-0"

A S105

bhd ARCHITECTS
www.bhdarchitects.com
Phone 801.571.0010
Fax 801.571.0303
Toll Free 888.571.0010
65 East Wadsworth Park Drive
Suite 205 Draper, Utah 84020

Matthew C. McBride No. 353893 8/14/24 STATE OF UTAH

THE CHURCH OF JESUS CHRIST OF LATTER-DAY SAINTS

Orem YSA 3rd 10 Ward Building
Orem UT YSA 3rd Stake

Approx. 1700 West 575 South
Vineyard, Utah 84059

Date: 15 Aug 2024 | BHD #: 2344 | County Parcel: 39-226-0001 | Plan Series: 2024 10 Ward S/C | Owner #: SNS-1876

Drawing Issue and Revision Schedule

#	Date	Description
1	15 Aug 2024	Bid Documents

ROOF FRAMING PLAN

S105

C:\Users\jacksonp\Documents\S-23738-Orem YSA Custom-2025_jacksonpQEMB2.rvt
Printed 8/19/2024 5:07:48 PM

ENLARGED ROOF FRAMING PLAN NOTES:
1. SEE S105 FOR ROOF FRAMING NOTES, ROOF LOADING TABLE, AND ADDITIONAL FRAMING INFORMATION

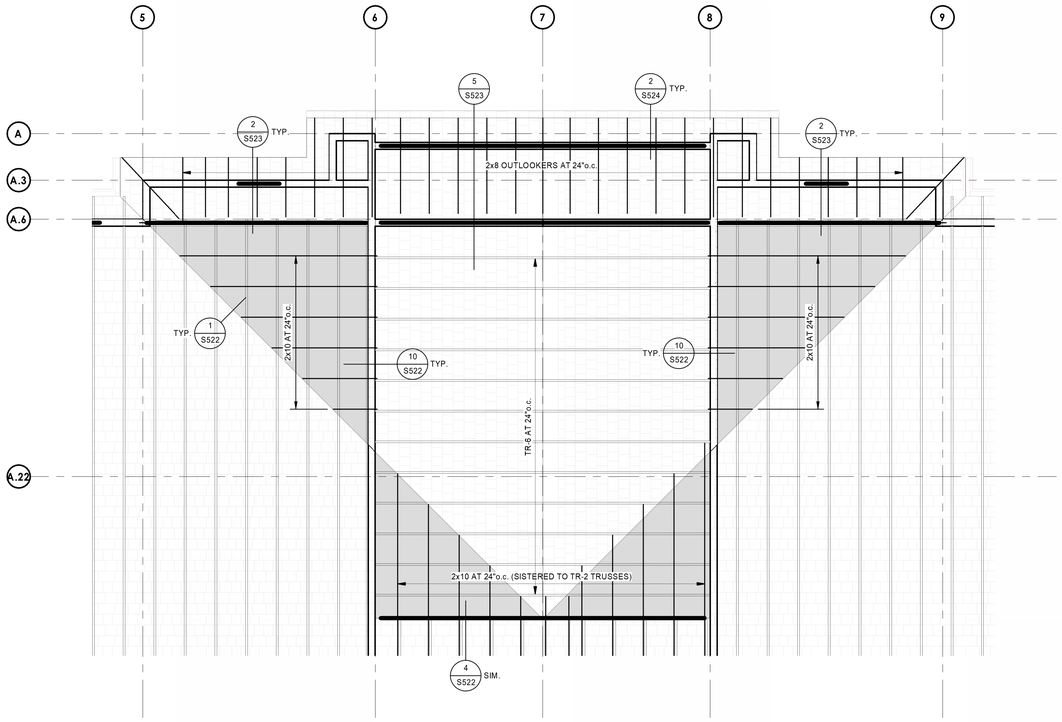

ENLARGED ROOF FRAMING PLAN
SCALE : 1/4" = 1'-0"
A S106

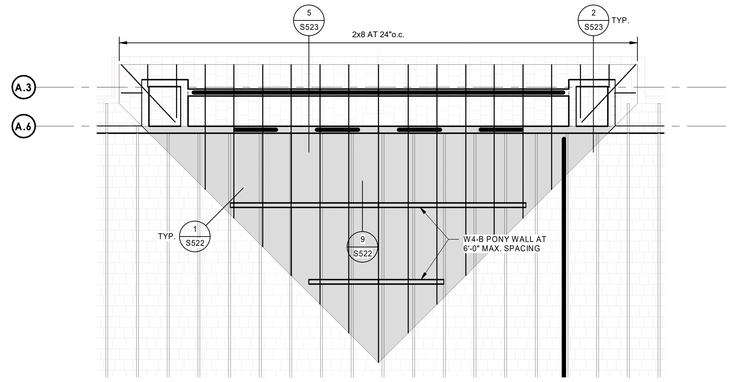

ENLARGED ROOF FRAMING PLAN
SCALE : 1/4" = 1'-0"
B S106

bhd ARCHITECTS
www.bhdarchitects.com
Phone 801.571.0010
Fax 801.571.0303
Toll Free 888.571.0010
65 East Wadsworth Park Drive
Suite 205 Draper, Utah 84020

PROFESSIONAL REGISTRATION Matthew C. McBride No. 353893 8/14/24 STATE OF UTAH

THE CHURCH OF JESUS CHRIST OF LATTER-DAY SAINTS

Orem YSA 3rd 10 Ward Building
Orem UT YSA 3rd Stake
Approx. 1700 West 575 South
Vineyard, Utah 84059

Date: 13 Aug 2024 | BHD #: 2344 | County Parcel#: 39-226-0001 | Plan Series: 2024 10 Ward SC | Owner #: 590-1876

Drawing Issue and Revision Schedule

#	Date	Description
1	13 Aug 2024	Bid Documents

ENLARGED ROOF FRAMING PLANS

S106

C:\Users\jacksonp\Documents\S-23738-Orem YSA Custom-2025_jacksonpQEMB2.rvt
Printed 8/19/2024 5:07:57 PM

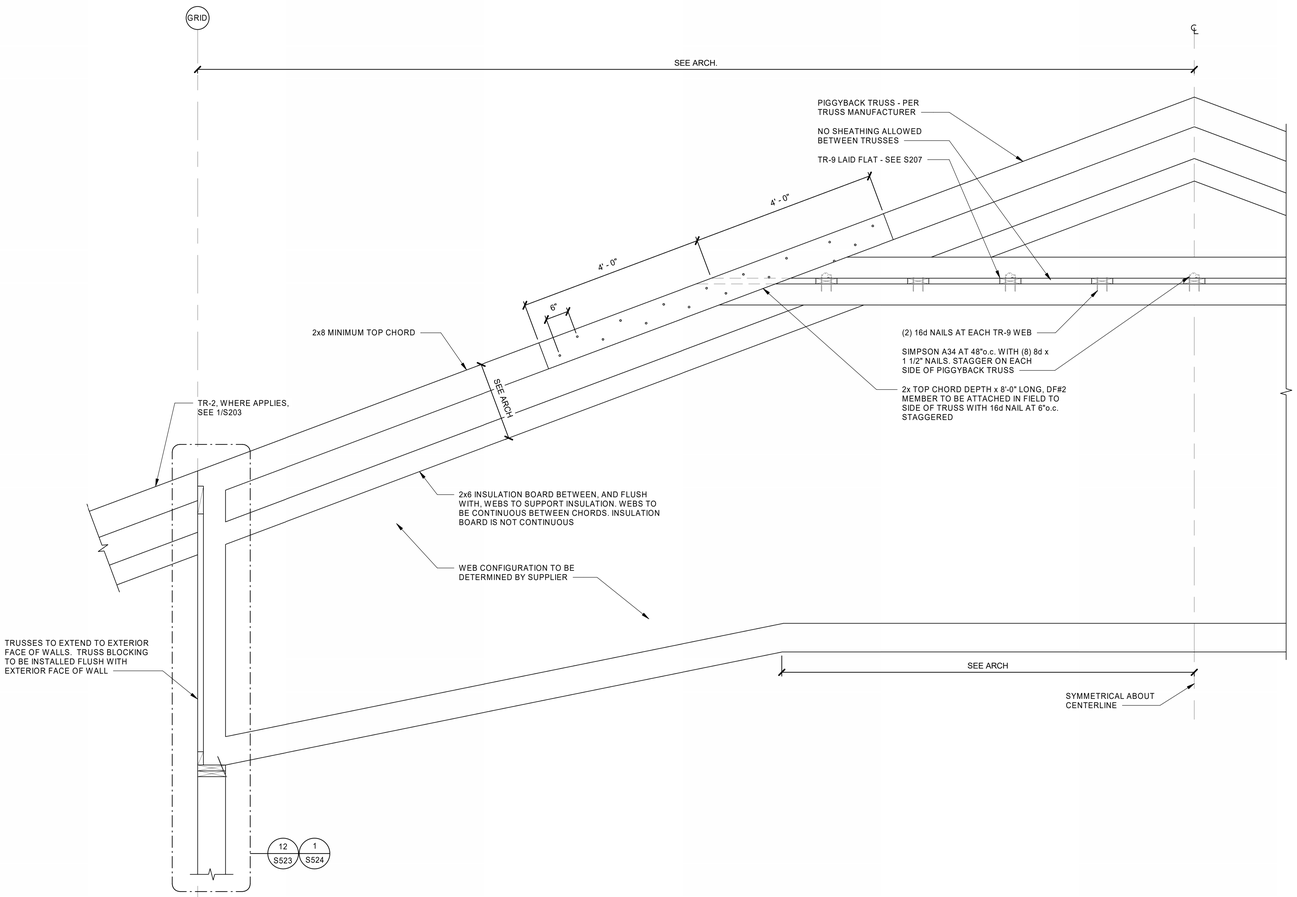

TR-1 TRUSS ELEVATION
SCALE : NONE
1
S201

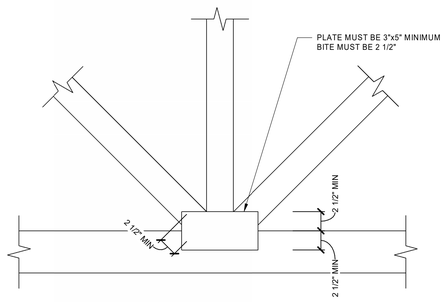

TYPICAL GUSSET TO TRUSS SCHEMATIC
SCALE : NONE
2
S201

TR-1 TRUSS LOADS (ASD)					
A	B	C	D	E	F
BALANCED SNOW/ROOF LIVE LOAD (plf)	TOP CHORD DEAD LOAD (plf)	WINDWARD LOAD (plf)	LEEWARD LOAD (plf)	LEEWARD EXTENT (FT'-IN" LOAD (plf)	BOTTOM CHORD LOAD (plf)
43	30	12.8	65.2	12'-11"	10

TR-1 TRUSS NOTES:

1. SEE S201 FOR GENERAL TRUSS NOTES.
2. TR-1 WIND LOADS ARE ASD LOADS.
3. SEISMIC LOADS DO NOT CONTROL DESIGN.
4. ADD 750# POINT LOAD TO EACH TRUSS SUPPORTING BASKETBALL STANDARD. SEE S105 AND ARCHITECTURAL.

TR-1 LOAD COMBINATIONS

TYPICAL TRUSS:
COMBINATION LOAD 1: LOAD DIAGRAMS 1,3
COMBINATION LOAD 2: LOAD DIAGRAMS 2,3

GENERAL TRUSS NOTES

1. TRUSS WEBS ARE NOT SHOWN, SEE TRUSS SUPPLIER DRAWINGS FOR TRUSS CONFIGURATION.
2. 2x4 MEMBERS SUPPORTING INSULATION MAY BE ATTACHED TO THE TRUSS WEB MEMBERS USING PRESS PLATES, STAPLES, OR TOE NAILS DESIGNED TO SUPPORT THE INSULATION AND HANGING LOADS. PRESS PLATES FOR INSULATION SUPPORT DO NOT NEED TO BE OVERSIZED PER CHURCH SPECIFICATION.
3. LOAD COMBINATIONS SHOWN ARE IN ADDITION TO THE IBC WIND AND SEISMIC LOAD COMBINATIONS. ALL TRUSSES SHALL BE DESIGNED PER LOAD COMBINATIONS SPECIFIED IN IBC SECTION 1605. WIND LOADS LISTED ARE ASD LOADS.
4. FRAMER TO INCLUDE AN ALLOWANCE FOR TRUSS BRACING THAT WILL BE DESIGNED BY THE TRUSS MANUFACTURER.
5. LIMIT TOTAL LOAD DEFLECTION TO L/240. LIMIT LIVE LOAD DEFLECTION TO L/360.
6. SPLICES IN TOP AND BOTTOM CHORDS TO OCCUR AT TRUSS JOINTS.
7. INSTALL ERECTION AND PERMANENT TRUSS BRIDGING AND BRACING AS REQUIRED BY THE TRUSS INSTITUTE AND AS SHOWN IN THE TRUSS SHOP DRAWINGS.
8. UNLESS A MORE STRINGENT FASTENING SCHEDULE IS PROVIDED BY THE TRUSS MANUFACTURER OR ELSEWHERE IN THESE DOCUMENTS, THE FOLLOWING IS TO BE USED FOR FASTENING MULTI-PLY TRUSSES TOGETHER:
   a. TRUSSES OF 4 OR MORE PLIES ARE TO BE CONNECTED TOGETHER USING 1/2" DIAMETER BOLTS AT 32"o.c. OR EQUAL. USE AT ALL MEMBERS.
   b. TRUSSES OF 3 OR LESS PLIES ARE TO BE CONNECTED TOGETHER USING 10d COMMON NAILS AT 8"o.c. STAGGERED TOP TO BOTTOM OF TRUSS MEMBERS OR EQUAL (9"o.c. SPACING AT TOP AND AT BOTTOM OF TRUSS MEMBERS). USE AT ALL MEMBERS.
9. TRUSS MANUFACTURER TO FASTEN MULTI-PLY TRUSSES PRIOR TO DELIVERY OF TRUSSES TO SITE.
10. SEE THE ARCHITECTURAL DRAWINGS FOR GEOMETRY INFORMATION NOT SHOWN.

TR-1 LOAD DIAGRAMS

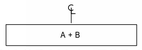

LOAD DIAGRAM 1 - TOP CHORD

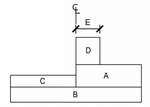

LOAD DIAGRAM 2 - TOP CHORD

NOTE: TRUSS TO SUPPORT LOADS AS SHOWN AND AS MIRRORED.

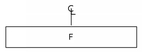

LOAD DIAGRAM 3 - BOTTOM CHORD

bhd ARCHITECTS
www.bhdarchitects.com
Phone 801.571.0010
Fax 801.571.0303
Toll Free 888.571.0010
63 East Wadsworth Park Drive
Suite 205 Draper, Utah 84020

Matthew C. McBride No. 353893 8/14/24 STATE OF UTAH

THE CHURCH OF JESUS CHRIST OF LATTER-DAY SAINTS

Orem YSA 3rd 10 Ward Building
Orem UT YSA 3rd Stake
Approx. 1700 West 575 South
Vineyard, Utah 84059

Date: 15 Aug 2024
BHD #: 2344
County Parcel: 39-228-0001
Plan Series: 2024 10 Ward SC
Owner #: 599-18-FA

Drawing Issue and Revision Schedule

#	Date	Description
	15 Aug 2024	Bid Documents

TRUSS ELEVATIONS

S201

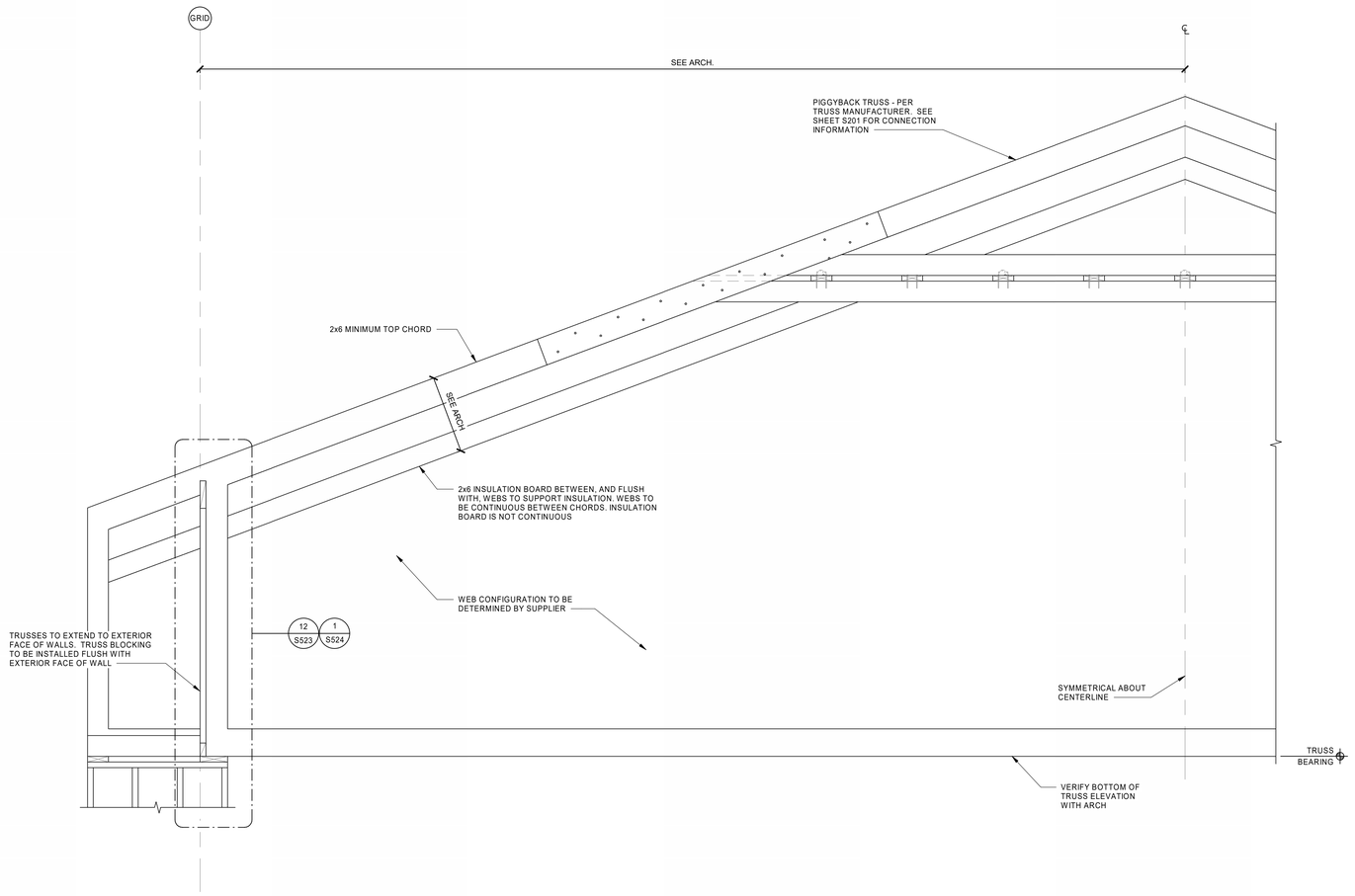

TR-1A TRUSS ELEVATION
SCALE : NONE

1 S202

TR-1A TRUSS NOTES:

1. SEE S201 FOR GENERAL TRUSS NOTES.
2. SEISMIC LOADS DO NOT CONTROL DESIGN.
3. LOAD DIAGRAMS APPLY TO TR-1A AT FOLDING PARTITION DOORS.
4. AT FOLDING PARTITION TRUSSES, LIMIT TOTAL LOAD DEFLECTION TO L/240, LIMIT LIVE LOAD DEFLECTION TO L/360, AND A MAXIMUM DEFLECTION OF 1/2" UNDER EITHER TOTAL LOAD OR LIVE LOAD.

TR-2 TRUSS LOADS (ASD)						
A	B	C	D	E	F	G
BALANCED SNOW/ROOF LIVE LOAD (plf)	TOP CHORD DEAD LOAD (plf)	WINDWARD LOAD (plf)	LEEWARD LOAD (plf)	LEEWARD EXTENT (FT'-IN" LOAD (plf)	BOTTOM CHORD LOAD (plf)	BOTTOM CHORD LOAD (plf)
43	30	12.8	65.2	12'-11"	119	48

TR-1A LOAD COMBINATIONS

COMBINATION LOAD 1: LOAD DIAGRAMS 1,3
COMBINATION LOAD 2: LOAD DIAGRAMS 2,3

TR-1A LOAD DIAGRAMS

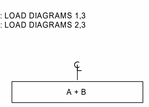

LOAD DIAGRAM 1 - TOP CHORD

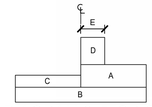

LOAD DIAGRAM 2 - TOP CHORD

NOTE: TRUSS TO SUPPORT LOADS AS SHOWN AND AS MIRRORED.

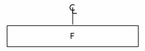

LOAD DIAGRAM 3 - BOTTOM CHORD



LOAD DIAGRAM 4 - BOTTOM CHORD

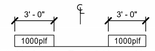

LOAD DIAGRAM 5 - BOTTOM CHORD

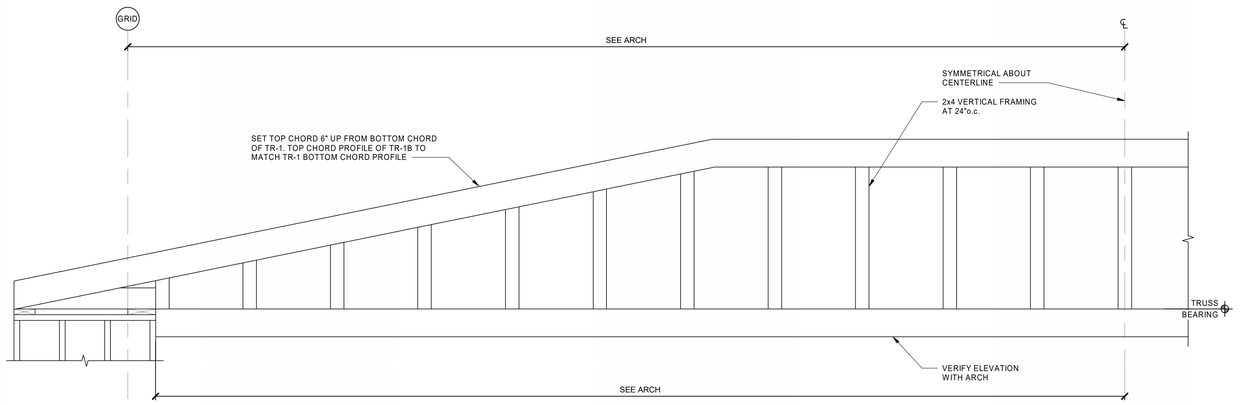

TR-1B TRUSS ELEVATION
SCALE : NONE

2 S202

TR-1B NOTES:

1. SEE 1/S201 FOR GENERAL TRUSS NOTES.
2. TR-1B HAS NO APPLIED GRAVITY LOADS AND DOES NOT SUPPORT INSULATION.
3. SEE 12/S522 FOR SCHEMATIC FRAMING OF TR-1B TO TR-1A.



LOAD DIAGRAM 1 - TOP CHORD

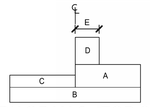

LOAD DIAGRAM 2 - TOP CHORD

NOTE: TRUSS TO SUPPORT LOADS AS SHOWN AND AS MIRRORED.

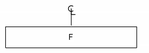

LOAD DIAGRAM 3 - BOTTOM CHORD

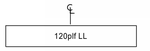

LOAD DIAGRAM 4 - BOTTOM CHORD

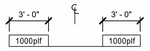

LOAD DIAGRAM 5 - BOTTOM CHORD

bhd ARCHITECTS
www.bhdarchitects.com
Phone 801.571.0010
Fax 801.571.0303
Toll Free 888.571.0010
65 East Wadsworth Park Drive
Suite 205 Draper, Utah 84020

Matthew C. McBride No. 353893 8/14/24 STATE OF UTAH

THE CHURCH OF JESUS CHRIST OF LATTER-DAY SAINTS

Orem YSA 3rd 10 Ward Building
Orem UT YSA 3rd Stake

Approx. 1700 West 575 South
Vineyard, Utah 84059

Date: 15 Aug 2024 | BHD #: 2344 | County Parcel: 39:228:0001 | Plan Series: 2024 10 Ward SC | Owner #: 599-1874

Drawing Issue and Revision Schedule

#	Date	Description
	15 Aug 2024	Bid Documents

TRUSS ELEVATIONS

S202

C:\Users\jacksonp\Documents\S-23738-Orem YSA Custom-2025_jacksonpQEMB2.rvt
Printed 8/19/2024 5:07:59 PM

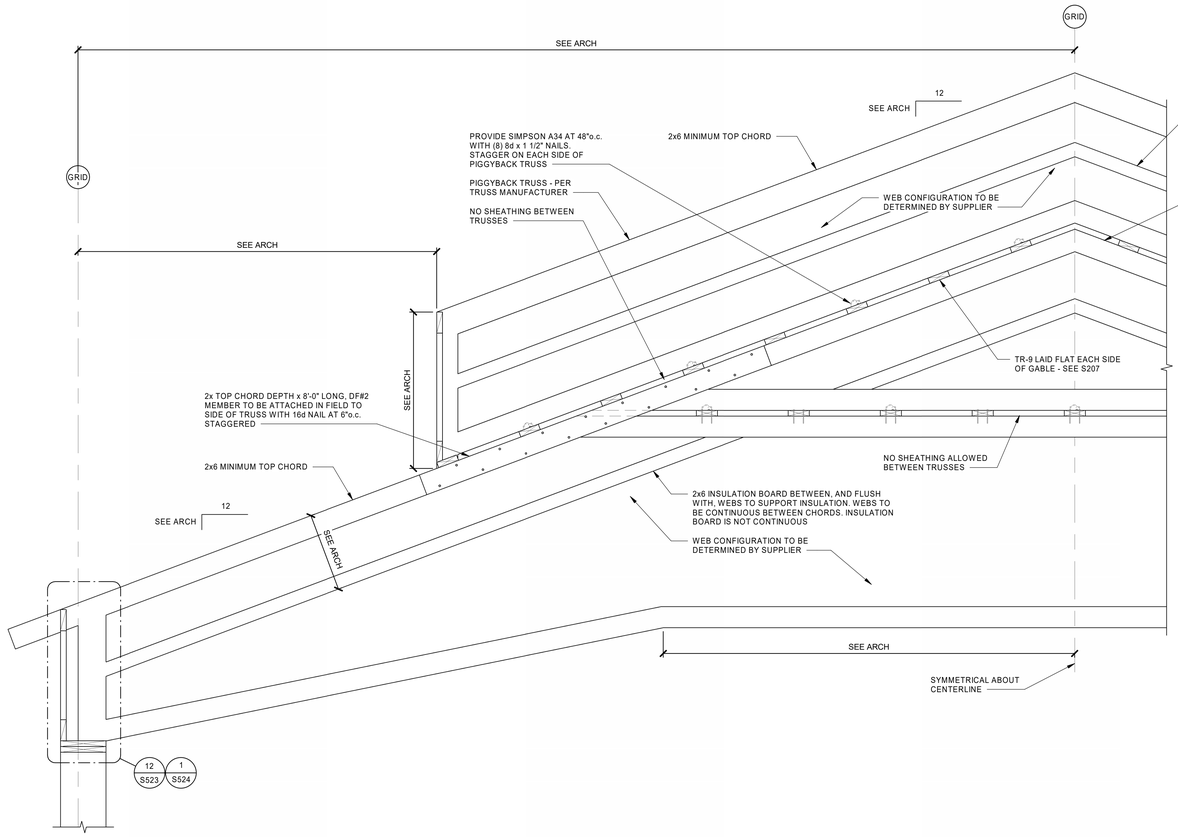

TR-1C TRUSS ELEVATION
SCALE : NONE

1
S203

TR-1 TRUSS LOADS (ASD)					
A	B	C	D	E	F
BALANCED SNOW/ROOF LIVE LOAD (plf)	TOP CHORD DEAD LOAD (plf)	WINDWARD LOAD (plf)	LEEWARD LOAD (plf)	LEEWARD EXTENT (FT'-IN" LOAD (plf)	BOTTOM CHORD LOAD (plf)
43	30	12.8	65.2	12'-11"	10

TR-1C TRUSS NOTES:

1. SEE S201 FOR GENERAL TRUSS NOTES.
2. TR-1C WIND LOADS ARE ASD LOADS.
3. SEISMIC LOADS DO NOT CONTROL DESIGN.
4. TRUSS TO BE (4) PLY AT STEEPLE SUPPORT.
5. TOP CHORD AT (4) PLY TRUSS AT STEEPLE TO BE 2x10.
6. LOAD DIAGRAMS 3,4,5,6, AND 7 APPLY TO TRUSSES AT STEEPLE SUPPORT.
7. SEE PLAN FOR SNOW DRIFT PROFILE ALONG EDGE OF LOWER TRUSS PORTION. THIS DRIFT IS TO BE APPLIED IN COMBINATION WITH THE OTHER LOAD CASES PER ASCE 7-16.
8. SEE DETAIL 2/S401 AND 3/S402 FOR LOAD TRANSFER FROM CAP TRUSS TO LOWER TRUSS AT STEEPLE BEAM ANCHORAGE LOCATIONS. TRUSS DESIGNER TO ENSURE HOLES IN THE CHORDS ARE ACCOUNTED FOR AT THE CONNECTION POINTS.

TR-1C LOAD COMBINATIONS

TYPICAL TRUSS:
COMBINATION LOAD 1: LOAD DIAGRAMS 1,8
COMBINATION LOAD 2: LOAD DIAGRAMS 2,8

STEEPLE TRUSS:
COMBINATION LOAD 1: LOAD DIAGRAMS 1,3,8
COMBINATION LOAD 2: LOAD DIAGRAMS 1,4,8
COMBINATION LOAD 3: LOAD DIAGRAMS 1,5,8
COMBINATION LOAD 4: LOAD DIAGRAMS 1,6,8
COMBINATION LOAD 5: LOAD DIAGRAMS 1,7,8
COMBINATION LOAD 6: LOAD DIAGRAMS 2,3,8
COMBINATION LOAD 7: LOAD DIAGRAMS 2,4,8
COMBINATION LOAD 8: LOAD DIAGRAMS 2,5,8
COMBINATION LOAD 9: LOAD DIAGRAMS 2,6,8
COMBINATION LOAD 10: LOAD DIAGRAMS 2,7,8

TR-1C LOAD DIAGRAMS

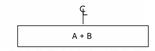

LOAD DIAGRAM 1 - TOP CHORD

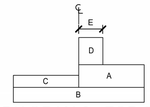

LOAD DIAGRAM 2 - TOP CHORD

NOTE: TRUSS TO SUPPORT LOADS AS SHOWN AND AS MIRRORED.

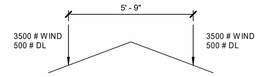

LOAD DIAGRAM 3 - TOP CHORD

WIND IN LONG DIRECTION

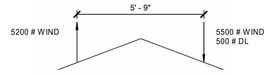

LOAD DIAGRAM 4 - TOP CHORD

NOTE: TRUSS TO SUPPORT LOADS AS SHOWN AND AS MIRRORED.
WIND IN SHORT DIRECTION

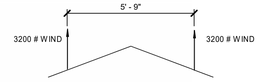

LOAD DIAGRAM 5 - TOP CHORD

WIND IN LONG DIRECTION

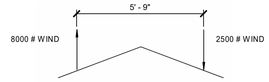

LOAD DIAGRAM 6 - TOP CHORD

NOTE: TRUSS TO SUPPORT LOADS AS SHOWN AND AS MIRRORED.
WIND DIAGONAL

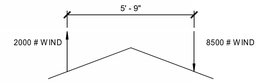

LOAD DIAGRAM 7 - TOP CHORD

NOTE: TRUSS TO SUPPORT LOADS AS SHOWN AND AS MIRRORED.
WIND DIAGONAL



LOAD DIAGRAM 8 - BOTTOM CHORD

bhd ARCHITECTS
www.bhdarchitects.com
Phone 801.571.0010
Fax 801.571.0303
Toll Free 888.571.0010
65 East Wadsworth Park Drive
Suite 205 Draper, Utah 84020

Matthew C. McBride No. 353893 8/14/24 LICENSED ARCHITECT STATE OF UTAH

THE CHURCH OF JESUS CHRIST OF LATTER-DAY SAINTS

Orem YSA 3rd 10 Ward Building
Orem UT YSA 3rd Stake

Approx. 1700 West 575 South
Vineyard, Utah 84059

Date: 15 Aug 2024 | BHD #: 2344 | County Parcel: 59-228-0001 | Plan Series: 2024 10 Ward 3C | Owner #: 395-1876

Drawing Issue and Revision Schedule

#	Date	Description

TRUSS ELEVATIONS

S203

C:\Users\jacksonp\Documents\S-23738-Orem YSA Custom-2025_jacksonpQEMB2.rvt
Printed 8/19/2024 5:08:00 PM

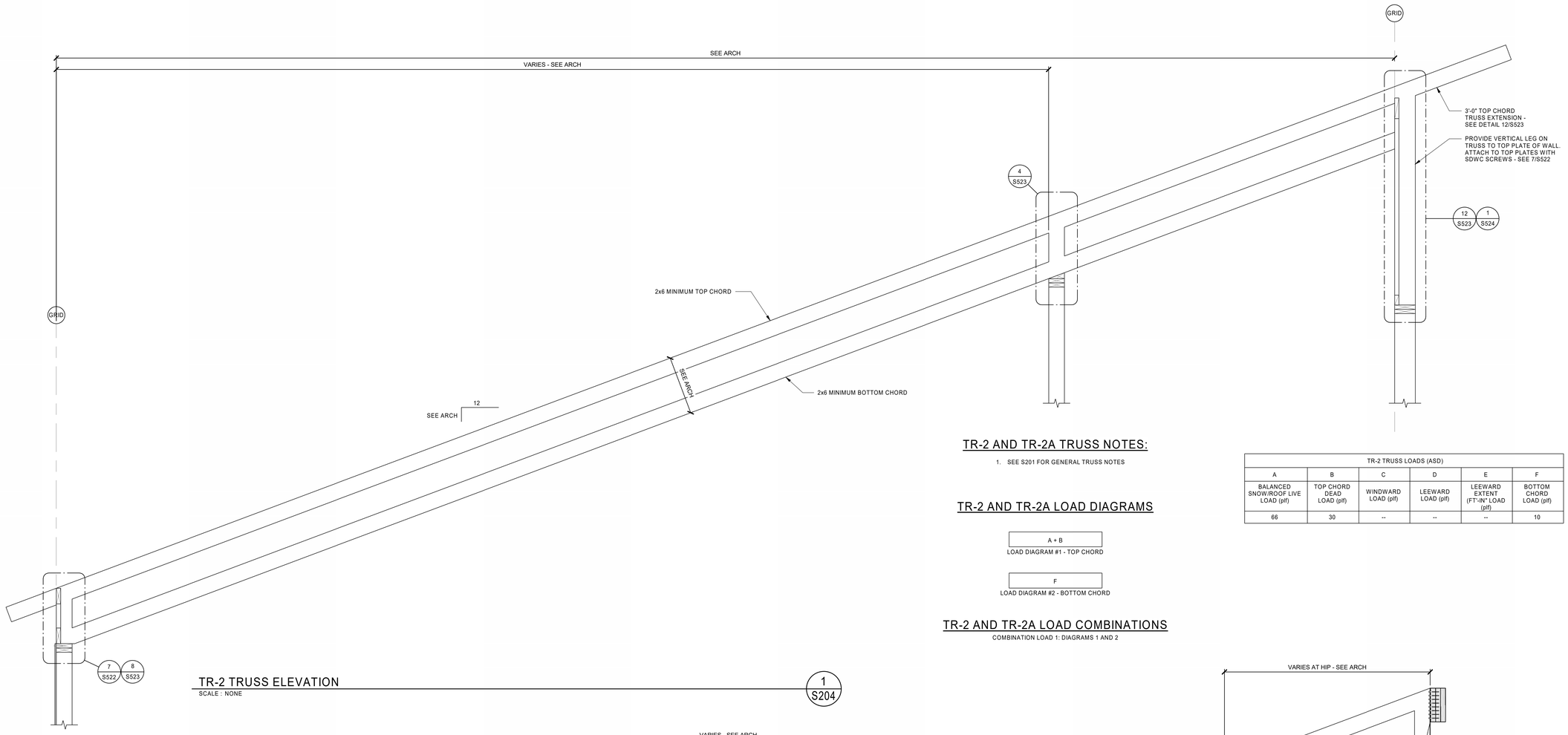

TR-2 TRUSS ELEVATION

SCALE : NONE

1 S204

TR-2 AND TR-2A TRUSS NOTES:

1. SEE S201 FOR GENERAL TRUSS NOTES

TR-2 AND TR-2A LOAD DIAGRAMS

A + B

LOAD DIAGRAM #1 - TOP CHORD

F

LOAD DIAGRAM #2 - BOTTOM CHORD

TR-2 AND TR-2A LOAD COMBINATIONS

COMBINATION LOAD 1: DIAGRAMS 1 AND 2

TR-2 TRUSS LOADS (ASD)					
A	B	C	D	E	F
BALANCED SNOW/ROOF LIVE LOAD (plf)	TOP CHORD DEAD LOAD (plf)	WINDWARD LOAD (plf)	LEEWARD LOAD (plf)	LEEWARD EXTENT (FT-IN" LOAD (plf)	BOTTOM CHORD LOAD (plf)
66	30	--	--	--	10

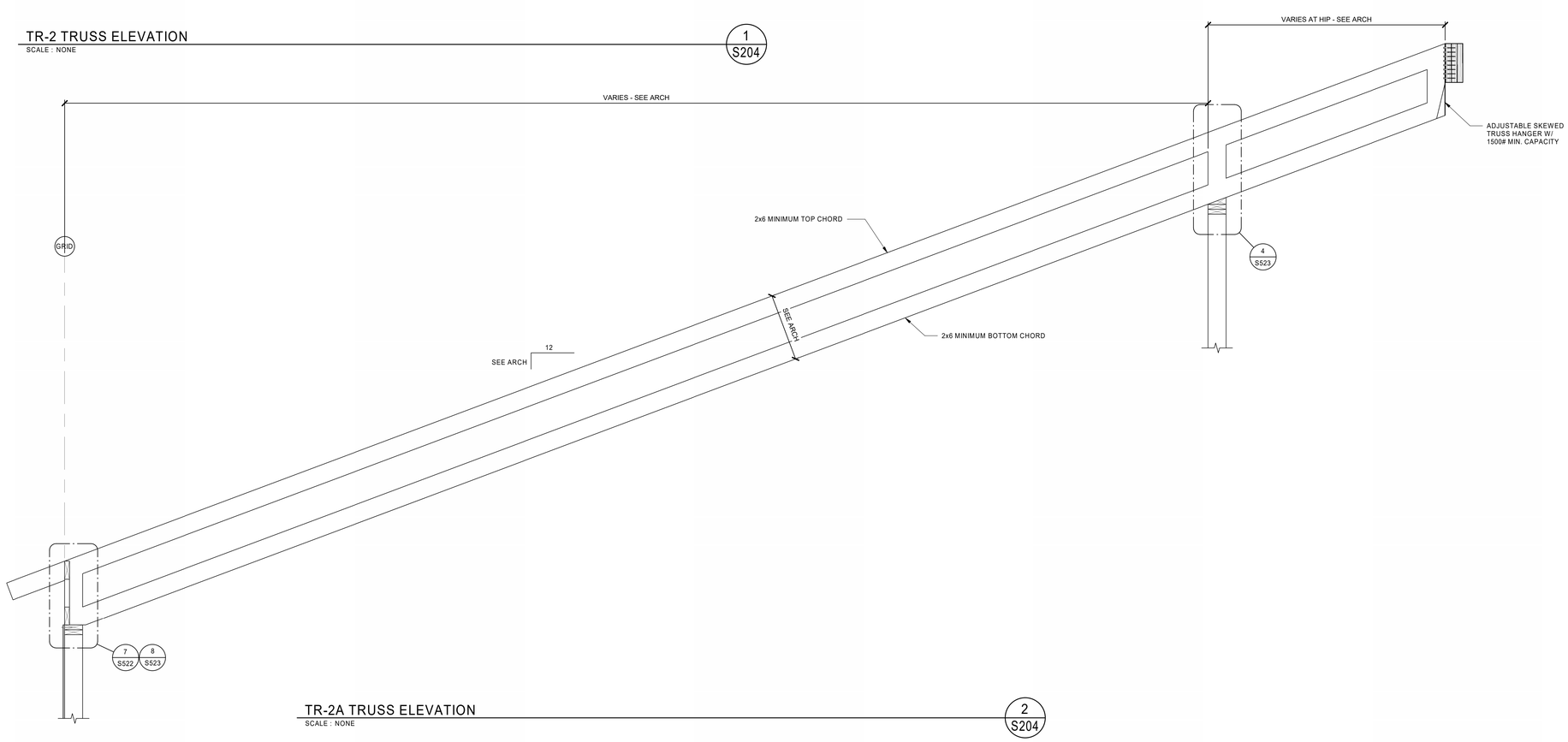

TR-2A TRUSS ELEVATION

SCALE : NONE

2 S204

bhd ARCHITECTS
www.bhdarchitects.com
Phone 801.571.0010
Fax 801.571.0303
Toll Free 888.571.0010
65 East Wadsworth Park Drive
Suite 205 Draper, Utah 84020

PROFESSIONAL ENGINEER
Matthew C. McBride
No. 353893
8/14/24
STATE OF UTAH

THE CHURCH OF JESUS CHRIST OF LATTER-DAY SAINTS

Orem YSA 3rd 10 Ward Building
Orem UT YSA 3rd Stake

Approx. 1700 West 575 South
Vineyard, Utah 84059

Date: 13 Aug 2024
BHD #: 2344
County Parcel: 39:228:0001
Plan Series: 2024 10 Ward SC
Owner #: 590-1876

Drawing Issue and Revision Schedule

#	Date	Description
1	13 Aug 2024	Bid Documents

TRUSS ELEVATIONS

S204

C:\Users\jackson\Documents\S 23738-Orem YSA Custom-2025_jacksonpQEvM2.rvt
Printed 8/19/2024 5:08:01 PM

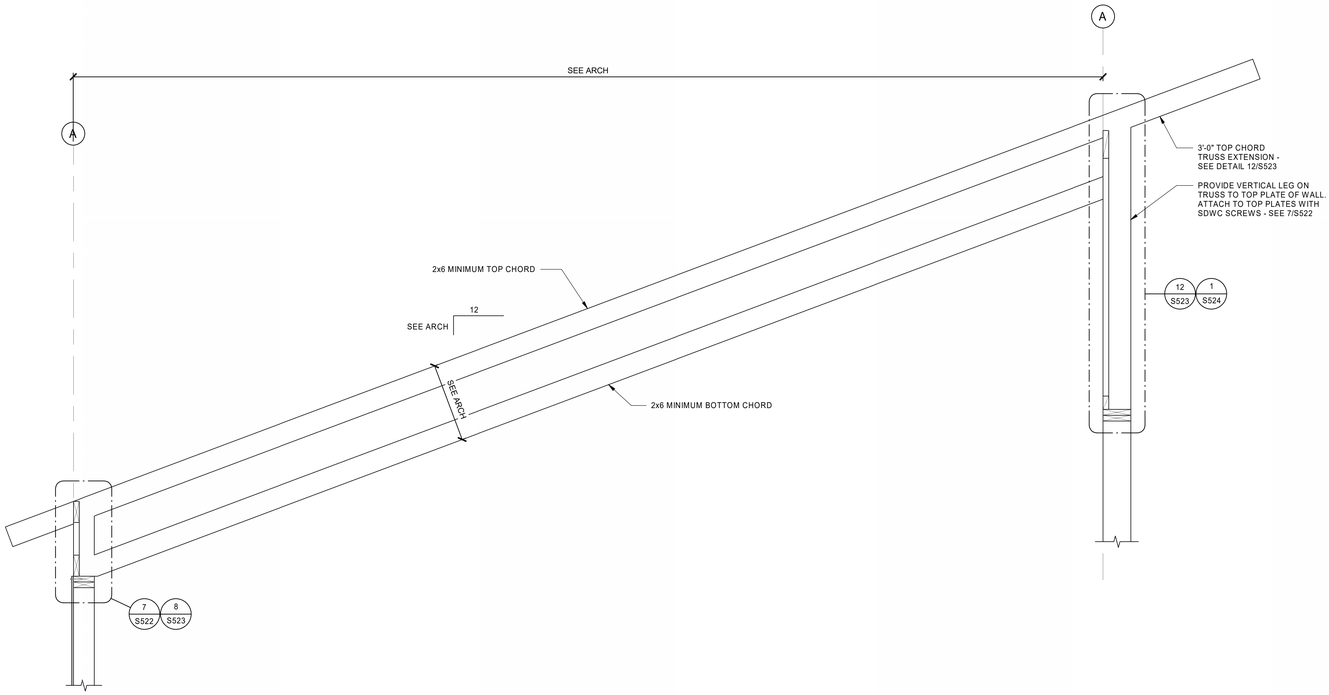

TR-3 TRUSS ELEVATION

SCALE : NONE

1
S205

TR-3 LOAD DIAGRAM

A + B

LOAD DIAGRAM #1 - TOP CHORD

F

LOAD DIAGRAM #2 - BOTTOM CHORD

TR-3 LOAD COMBINATIONS

COMBINATION LOAD 1: DIAGRAMS 1 AND 2

TR-3 TRUSS NOTES

1. SEE S201 FOR GENERAL TRUSS NOTES.
2. SEE PLAN FOR SNOW DRIFT PROFILE ALONG ROOF STEP. THIS DRIFT IS TO BE APPLIED IN COMBINATION WITH THE OTHER LOAD CASES PER ASCE 7-16.

TR-3 TRUSS LOADS (ASD)					
A	B	C	D	E	F
BALANCED SNOW/ROOF LIVE LOAD (plf)	TOP CHORD DEAD LOAD (plf)	WINDWARD LOAD (plf)	LEEWARD LOAD (plf)	LEEWARD EXTENT (FT'-IN" LOAD (plf)	BOTTOM CHORD LOAD (plf)
66	30	--	--	--	10

bhd ARCHITECTS
www.bhdarchitects.com
Phone 801.571.0010
Fax 801.571.0303
Toll Free 888.571.0010
65 East Wadsworth Park Drive
Suite 205 Draper, Utah 84020

PROFESSIONAL ENGINEER Matthew C. McBride No. 353893 8/14/24 STATE OF UTAH

THE CHURCH OF JESUS CHRIST OF LATTER-DAY SAINTS

Orem YSA 3rd 10 Ward Building
Orem UT YSA 3rd Stake

Approx. 1700 West 575 South
Vineyard, Utah 84059

Date: 15 Aug 2024 | BHD #: 2344 | County Parcel: 59:228:0001 | Plan Series: 2024 10 Ward SC | Owner #: 396-187a

Drawing Issue and Revision Schedule

#	Date	Description
1	15 Aug 2024	Bid Documents

TRUSS ELEVATIONS

S205

C:\Users\jacksonp\Documents\S-23738-Orem YSA Custom-2025_jacksonpQEMB2.rvt
Printed 8/19/2024 5:08:02 PM

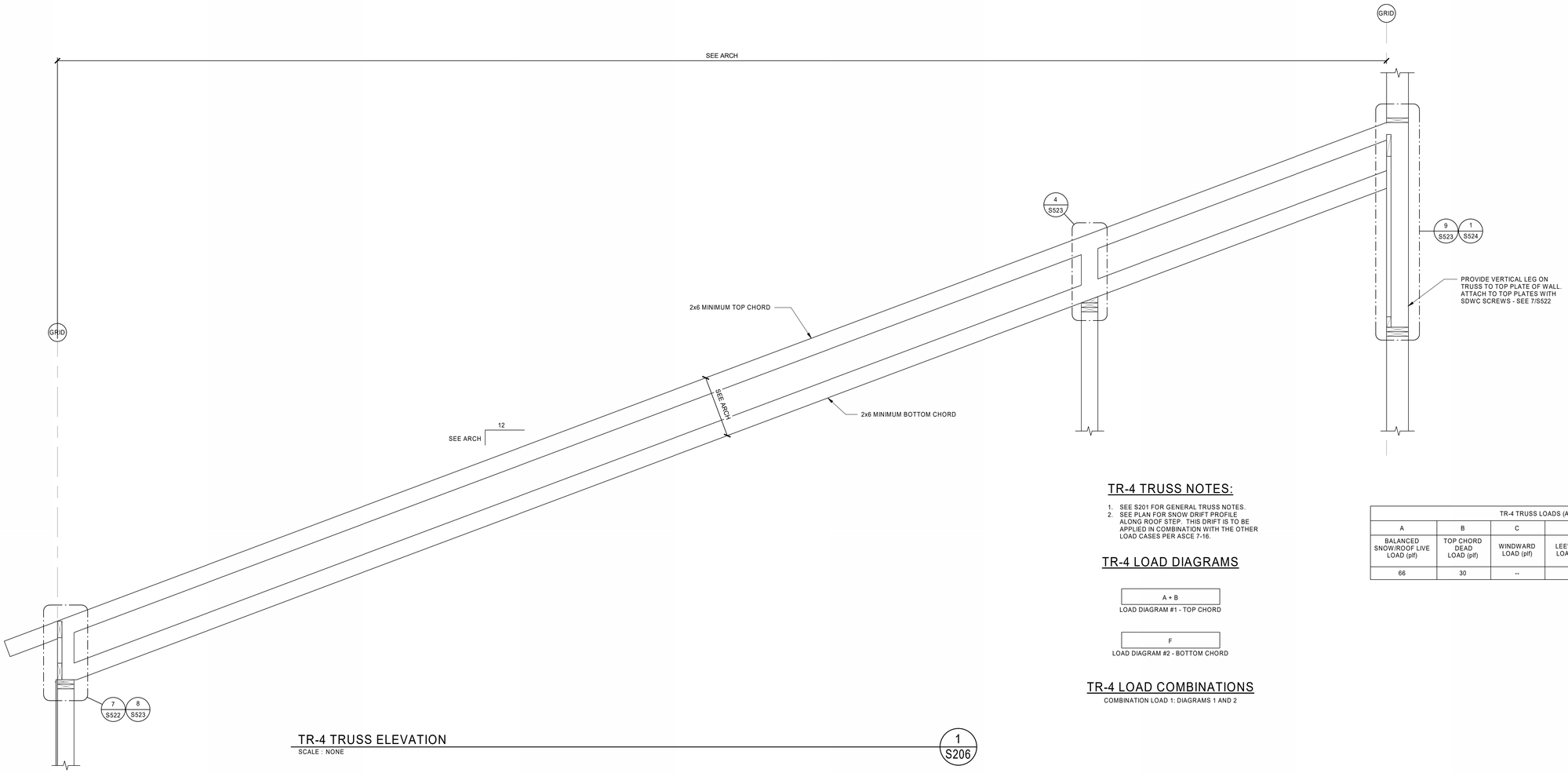

TR-4 TRUSS ELEVATION

SCALE : NONE

1 S206

TR-4 TRUSS NOTES:

1. SEE S201 FOR GENERAL TRUSS NOTES.
2. SEE PLAN FOR SNOW DRIFT PROFILE ALONG ROOF STEP. THIS DRIFT IS TO BE APPLIED IN COMBINATION WITH THE OTHER LOAD CASES PER ASCE 7-16.

TR-4 LOAD DIAGRAMS

A + B

LOAD DIAGRAM #1 - TOP CHORD

F

LOAD DIAGRAM #2 - BOTTOM CHORD

TR-4 LOAD COMBINATIONS

COMBINATION LOAD 1: DIAGRAMS 1 AND 2

TR-4 TRUSS LOADS (ASD)					
A	B	C	D	E	F
BALANCED SNOW/ROOF LIVE LOAD (plf)	TOP CHORD DEAD LOAD (plf)	WINDWARD LOAD (plf)	LEEWARD LOAD (plf)	LEEWARD EXTENT (FT'-IN" LOAD (plf)	BOTTOM CHORD LOAD (plf)
66	30	--	--	--	10

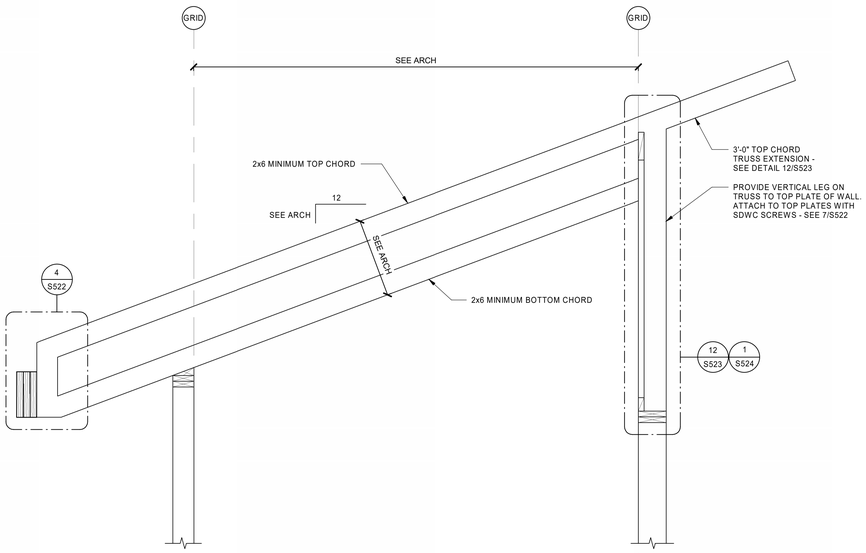

TR-5 TRUSS ELEVATION

SCALE : NONE

2 S206

TR-5 TRUSS NOTES

1. SEE S201 FOR GENERAL TRUSS NOTES

TR-5 LOAD DIAGRAM

CL

A + B

LOAD DIAGRAM #1 - TOP CHORD

CL

F

LOAD DIAGRAM #2 - BOTTOM CHORD

TR-5 LOAD COMBINATIONS

COMBINATION LOAD 1: DIAGRAMS 1,2

TR-5 TRUSS LOADS (ASD)					
A	B	C	D	E	F
BALANCED SNOW/ROOF LIVE LOAD (plf)	TOP CHORD DEAD LOAD (plf)	WINDWARD LOAD (plf)	LEEWARD LOAD (plf)	LEEWARD EXTENT (FT'-IN" LOAD (plf)	BOTTOM CHORD LOAD (plf)
66	30	--	--	--	10

bhd ARCHITECTS
www.bhdarchitects.com
Phone 801.571.0010
Fax 801.571.0303
Toll Free 888.571.0010
65 East Wadsworth Park Drive
Suite 205 Draper, Utah 84020

PROFESSIONAL ENGINEER Matthew C. McBride No. 353893 8/14/24 STATE OF UTAH

THE CHURCH OF JESUS CHRIST OF LATTER-DAY SAINTS

Orem YSA 3rd 10 Ward Building
Orem UT YSA 3rd Stake

Approx. 1700 West 575 South
Vineyard, Utah 84059

BHD #: 2344 | County Parcel: 35-226-0001 | Plan Series: 2024 10 Ward SC | Owner #: 590-1876

Date: 15 Aug 2024

Drawing Issue and Revision Schedule

#	Description	Date
1	Bid Documents	15 Aug 2024

TRUSS ELEVATIONS

S206

C:\Users\jacksonp\Documents\S-23738-Orem YSA Custom-2025_jacksonpQEMB2.rvt
Printed 8/19/2024 5:08:03 PM

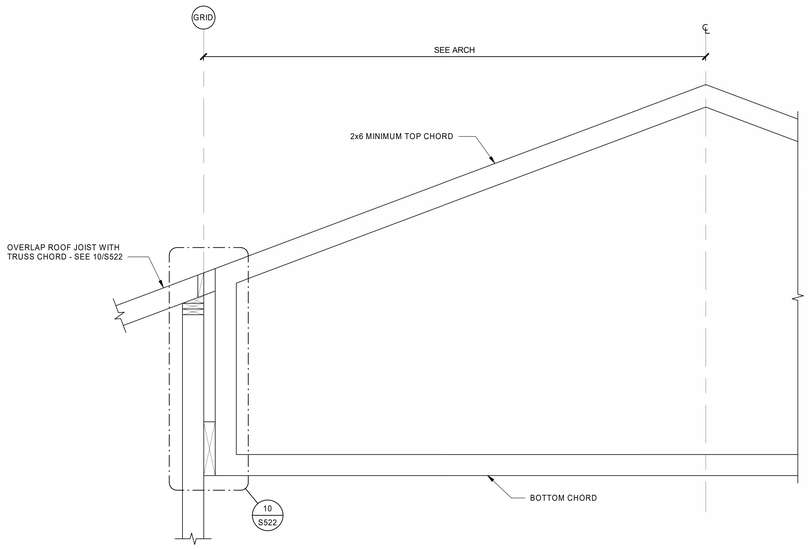

TR-6 TRUSS ELEVATION

SCALE : NONE

1 / S207

TR-6 TRUSS NOTES

1. SEE S201 FOR GENERAL TRUSS NOTES

TR-6 LOAD DIAGRAM



LOAD DIAGRAM #1 - TOP CHORD

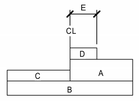

LOAD DIAGRAM #2 - TOP CHORD

NOTE: TRUSS TO SUPPORT LOADS AS SHOWN AND AS MIRRORED.



LOAD DIAGRAM #3 - BOTTOM CHORD

TR-6 LOAD COMBINATIONS

COMBINATION LOAD 1: DIAGRAMS 1,3
COMBINATION LOAD 2: DIAGRAMS 2,3

TR-6 TRUSS LOADS (ASD)					
A	B	C	D	E	F
BALANCED SNOW/ROOF LIVE LOAD (plf)	TOP CHORD DEAD LOAD (plf)	WINDWARD LOAD (plf)	LEEWARD LOAD (plf)	LEEWARD EXTENT (FT'-IN" LOAD (plf)	BOTTOM CHORD LOAD (plf)
43	30	12.8	33.6	6'-8"	10

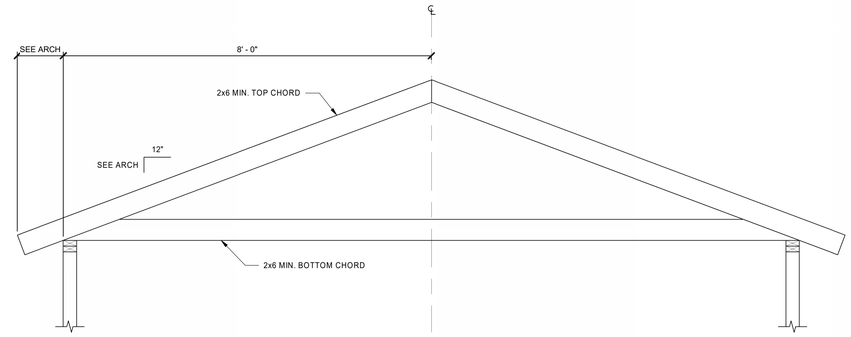

STORAGE TRUSS LOADS (ASD)					
A	B	C	D	E	F
BALANCED SNOW/ROOF LIVE LOAD (plf)	TOP CHORD DEAD LOAD (plf)	WINDWARD LOAD (plf)	LEEWARD LOAD (plf)	LEEWARD EXTENT (FT'-IN" LOAD (plf)	BOTTOM CHORD LOAD (plf)
72	30	22	42	7'-6"	10

STORAGE TRUSS NOTES:

1. SEE S201 FOR GENERAL TRUSS NOTES.

STORAGE TRUSS LOAD DIAGRAMS

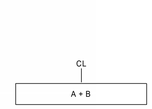

LOAD DIAGRAM 1 - TOP CHORD

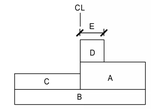

LOAD DIAGRAM 2 - TOP CHORD

NOTE: TRUSS TO SUPPORT LOADS AS SHOWN AND AS MIRRORED.

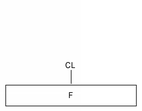

LOAD DIAGRAM 3 - BOTTOM CHORD

STORAGE TRUSS ELEVATION

SCALE : NONE

2 / S207

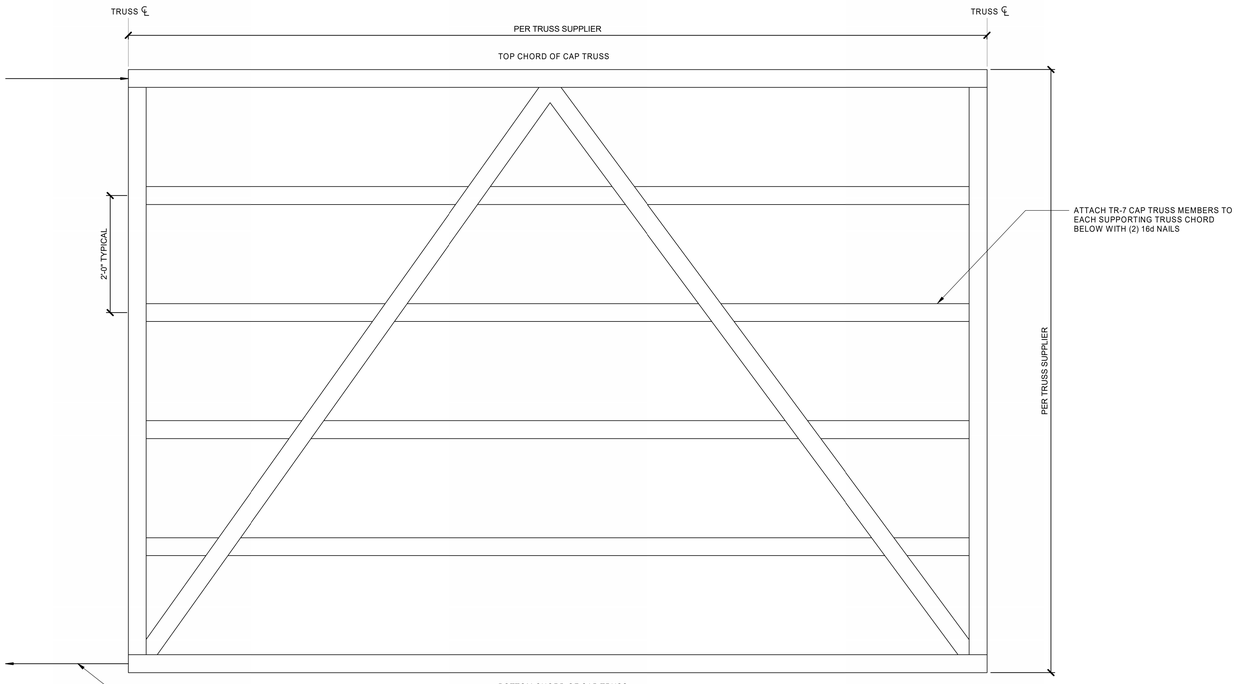

TR-7 TRUSS NOTES:
1. SEE S201 FOR GENERAL TRUSS NOTES

TR-9 CAP TRUSS ELEVATION

SCALE : NONE

3 / S207

bhd ARCHITECTS
www.bhdarchitects.com
Phone 801.571.0010
Fax 801.571.0303
Toll Free 888.571.0010
65 East Wadsworth Park Drive
Suite 205 Draper, Utah 84020

Matthew C. McBride
No. 353893
8/14/24
PROFESSIONAL ENGINEER
STATE OF UTAH

THE CHURCH OF JESUS CHRIST OF LATTER-DAY SAINTS

Orem YSA 3rd 10 Ward Building
Orem UT YSA 3rd Stake

Approx. 1700 West 575 South
Vineyard, Utah 84059

BHD #: 2344 | County Parcel: 51-228-0001 | Plan Series: 2024 10 Ward SC | Owner #: 390-187a
Date: 15 Aug 2024

Drawing Issue and Revision Schedule		
#	Date	Description
1	15 Aug 2024	Bid Documents

TRUSS ELEVATIONS

S207

C:\Users\jacksonp\Documents\S-23738-Orem YSA Custom-2025_jacksonpQEMB2.rvt
Printed 8/19/2024 5:08:04 PM

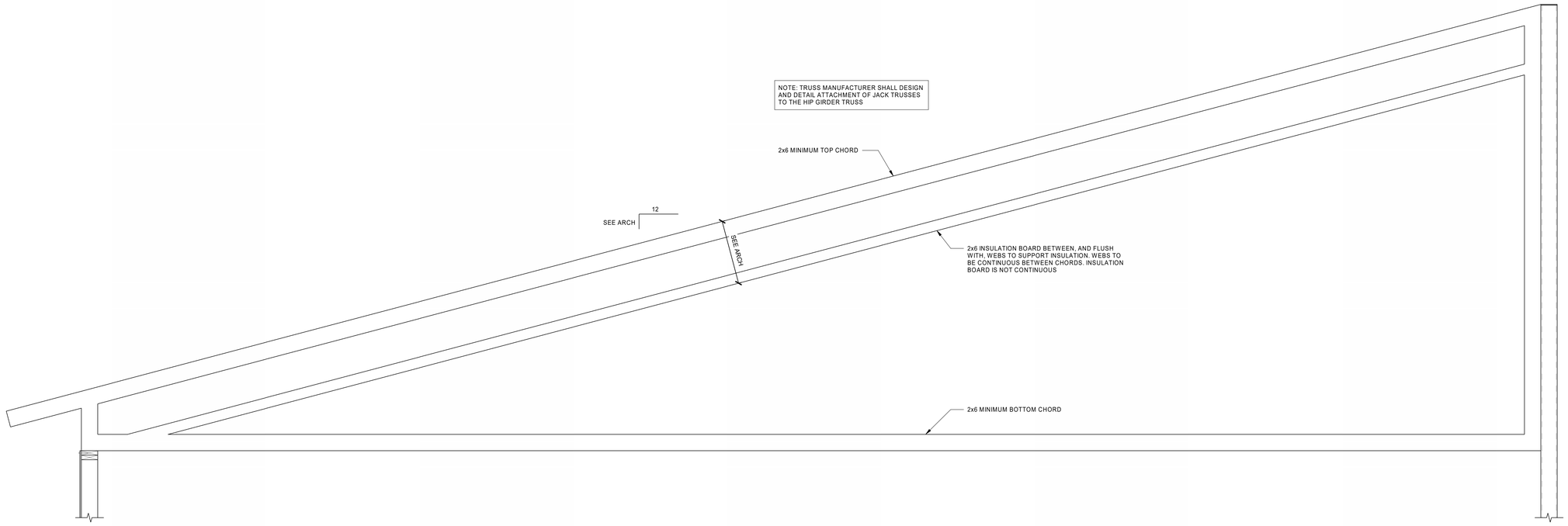

HG-1 TRUSS ELEVATION
SCALE : NONE

1
S208

bhd ARCHITECTS
www.bhdarchitects.com
Phone 801.571.0010
Fax 801.571.0303
Toll Free 888.571.0010
65 East Wadsworth Park Drive
Suite 205 Draper, Utah 84020

Matthew C. McBride
No. 353893
8/14/24
PROFESSIONAL ENGINEER
STATE OF UTAH

THE CHURCH OF
JESUS CHRIST
OF LATTER-DAY SAINTS

Orem YSA 3rd 10 Ward Building
Orem UT YSA 3rd Stake

Approx. 1700 West 575 South
Vineyard, Utah 84059

Date: 15 Aug 2024
BHD #: 2344
County Parcel: 59:228:0001
Plan Series: 2024 10 Ward SC
Owner #: 390-187a

Drawing Issue and Revision Schedule

#	Date	Description

TRUSS ELEVATIONS

S208

C:\Users\jacksonp\Documents\S-23738-Orem YSA Custom-2025_jacksonpQEMB2.rvt
Printed 8/19/2024 5:08:05 PM

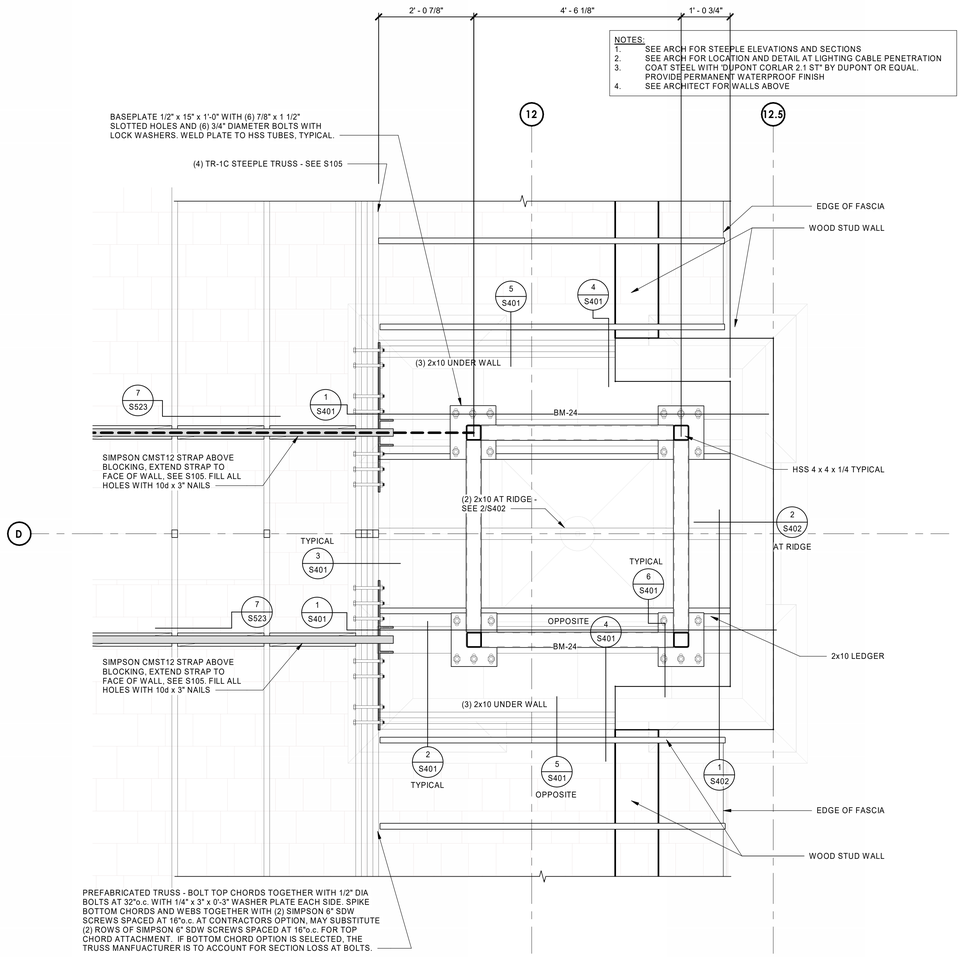

ENLARGED ROOF FRAMING PLAN

SCALE : 3/4" = 1'-0"

A S401

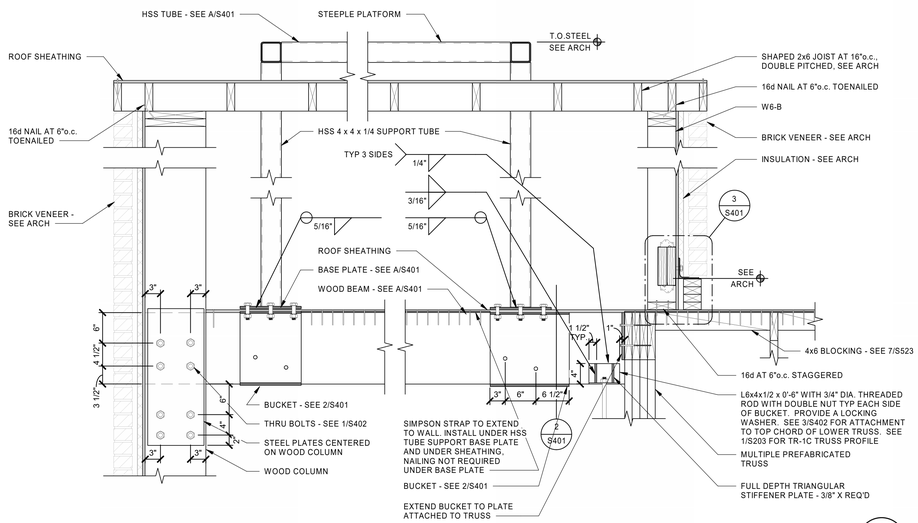

CONNECTION AT TRUSS

SCALE : NONE

1 S401

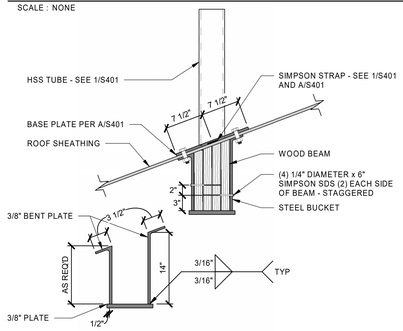

BASE PLATE CONNECTION AT WOOD BEAM

SCALE : NONE

2 S401

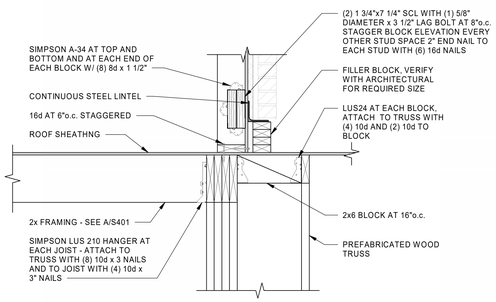

STEEPLE DETAIL AT JOIST

SCALE : NONE

3 S401

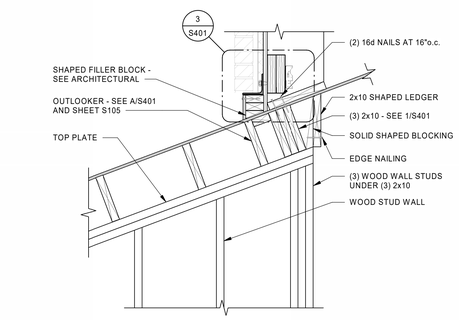

BEAM BEARING AT STEEPLE

SCALE : NONE

4 S401

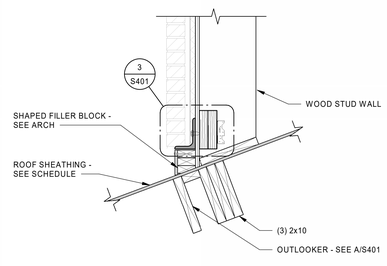

WALL DETAIL AT STEEPLE

SCALE : NONE

5 S401

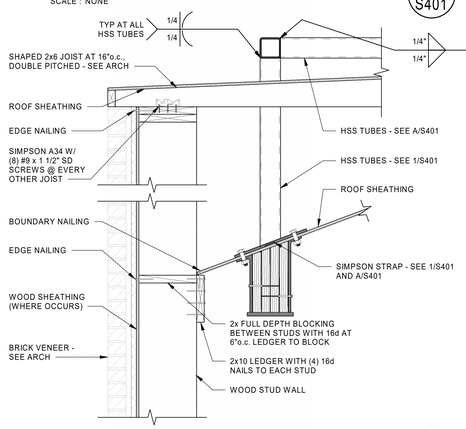

DETAIL AT STEEPLE

SCALE : NONE

6 S401

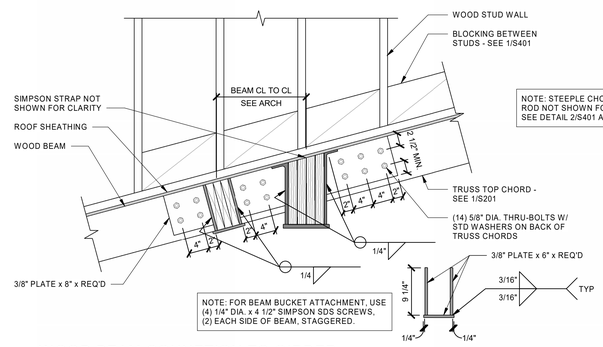

WOOD BEAM CONNETION TO GIRDER TRUSS

SCALE : NONE

7 S401

bhd ARCHITECTS
www.bhdarchitects.com
Phone 801.571.0010
Fax 801.571.0303
Toll Free 888.571.0010
65 East Wadsworth Park Drive
Suite 205 Draper, Utah 84020

Matthew C. McBride No. 353893 8/14/24 STATE OF UTAH

THE CHURCH OF JESUS CHRIST OF LATTER-DAY SAINTS

Orem YSA 3rd 10 Ward Building
Orem UT YSA 3rd Stake

Approx. 1700 West 575 South
Vineyard, Utah 84059

BID #: 2344 | County Parcel: 39-226-0001 | Plan Series: 2024 10 Ward SC | Owner #: 390-1876

Date: 15 Aug 2024

Drawing Issue and Revision Schedule

#	Date	Description
1	15 Aug 2024	Bid Documents

STEEPLE PLATFORM, FRAMING, AND DETAILS

S401

C:\Users\jacksonp\Documents\S-23738-Orem YSA Custom-2025_jacksonpQEMB2.rvt
Printed 8/19/2024 5:08:07 PM

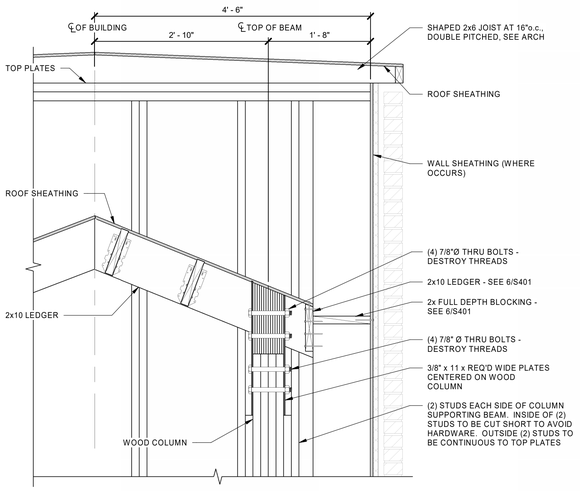

DETAIL AT STEEPLE - FRONT WALL

SCALE : NONE

1
S402

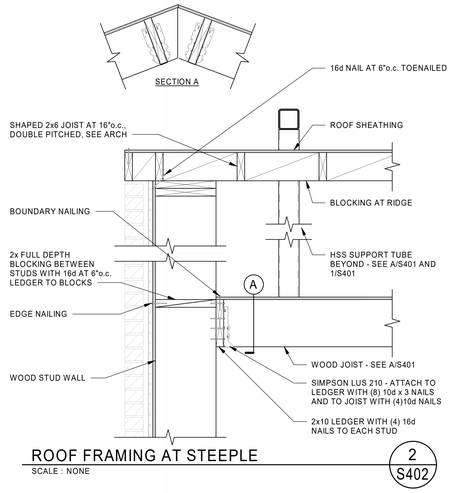

ROOF FRAMING AT STEEPLE

SCALE : NONE

2
S402

bhd ARCHITECTS
www.bhdarchitects.com
Phone 801.571.0010
Fax 801.571.0303
Toll Free 888.571.0010
65 East Wadsworth Park Drive
Suite 205 Draper, Utah 84020

PROFESSIONAL ENGINEER
Matthew C. McBride
No. 353893
8/14/24
STATE OF UTAH

THE CHURCH OF JESUS CHRIST OF LATTER-DAY SAINTS

Orem YSA 3rd 10 Ward Building
Orem UT YSA 3rd Stake

Approx. 1700 West 575 South
Vineyard, Utah 84059

Date: 15 Aug 2024 | BHD #: 2344 | County Parcel: 59:228:0001 | Plan Series: 2024 10 Ward SC | Owner #: 396-187a

Drawing Issue and Revision Schedule		
#	Date	Description
1	15 Aug 2024	Bid Documents

STEEPLE DETAILS

S402

C:\Users\jacksonp\Documents\S-23738-Orem YSA Custom-2025_jacksonpQEMB2.rvt
Printed 8/19/2024 5:08:08 PM

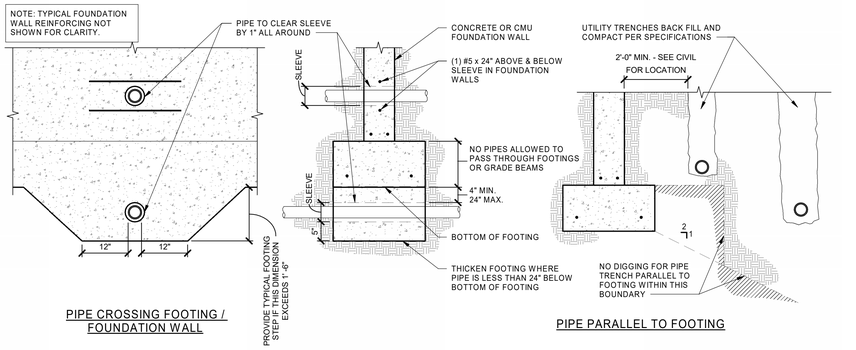

TYPICAL PIPE PERPENDICULAR AND PARALLEL TO FOOTING DETAIL

SCALE : NONE

1 S501

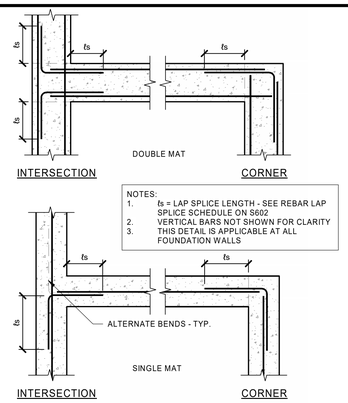

TYPICAL REINFORCING AT INTERSECTIONS IN CONCRETE WALLS

SCALE : NONE

2 S501

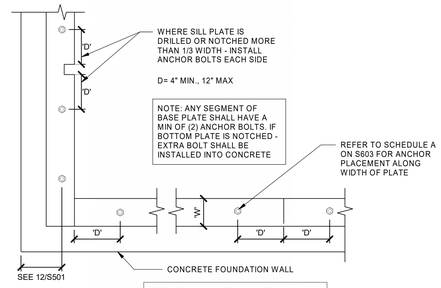

TYPICAL SILL PLATE BOLTING DETAIL

SCALE : NONE

3 S501

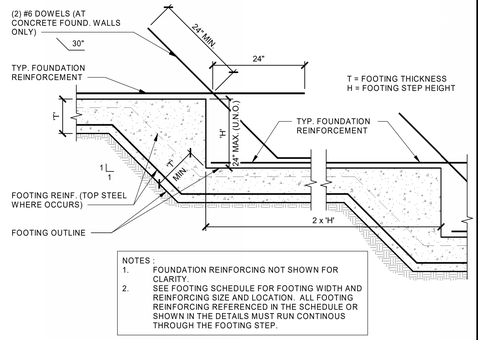

TYPICAL FOOTING STEP DETAIL

SCALE : NONE

4 S501

TYPICAL NON-STRUCTURAL WOOD STUD WALL AT DEPRESSED CONCRETE SLAB ON GRADE

SCALE : NONE

5 S501

INTERIOR CONCRETE FOOTING

SCALE : NONE

6 S501

NON-STRUCTURAL STUD AT SLAB ON GRADE

SCALE : NONE

7 S501

TYPICAL FOOTING STEP AT EXTERIOR FOUNDATION WALL

SCALE : NONE

8 S501

TYPICAL SLAB ON GRADE DETAILS

SCALE : NONE

9 S501

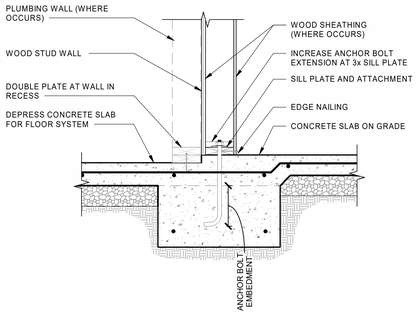

BEARING WALL DETAIL AT FLOOR OFFSET

SCALE : NONE

10 S501

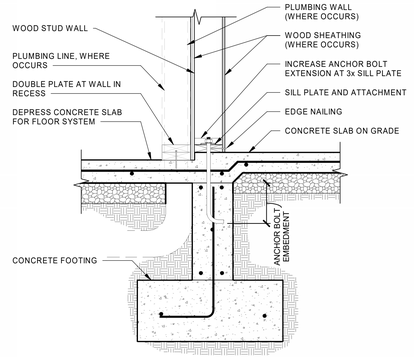

BEARING WALL DETAIL AT FLOOR OFFSET WITH FOUNDATION SYSTEM

SCALE : NONE

11 S501

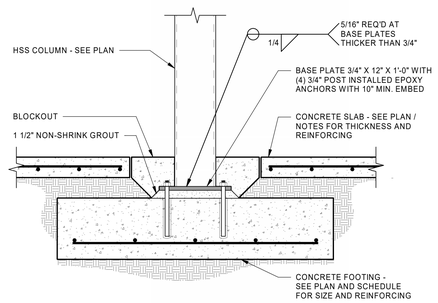

COLUMN TO SPOT FOOTING

SCALE : NONE

12 S501

bhd ARCHITECTS
www.bhdarchitects.com
Phone 801.571.0010
Fax 801.571.0303
Toll Free 888.571.0010
65 East Wadsworth Park Drive
Suite 205 Draper, Utah 84020

Matthew C. McBride No. 353893 8/14/24 STATE OF UTAH

THE CHURCH OF JESUS CHRIST OF LATTER-DAY SAINTS

Orem YSA 3rd 10 Ward Building
Orem UT YSA 3rd Stake

Approx. 1700 West 575 South
Vineyard, Utah 84059

Date: 15 Aug 2024 | BHD #: 2344 | County Parcel: 59:228:0001 | Plan Series: 2024 10 Ward SC | Owner #: 390-187a

Drawing Issue and Revision Schedule		
#	Date	Description
1	15 Aug 2024	Bid Documents

FOUNDATION DETAILS

S501

C:\Users\jacksonp\Documents\S-23738-Orem YSA Custom-2025_jacksonpQEMB2.rvt
Printed 8/19/2024 5:08:10 PM

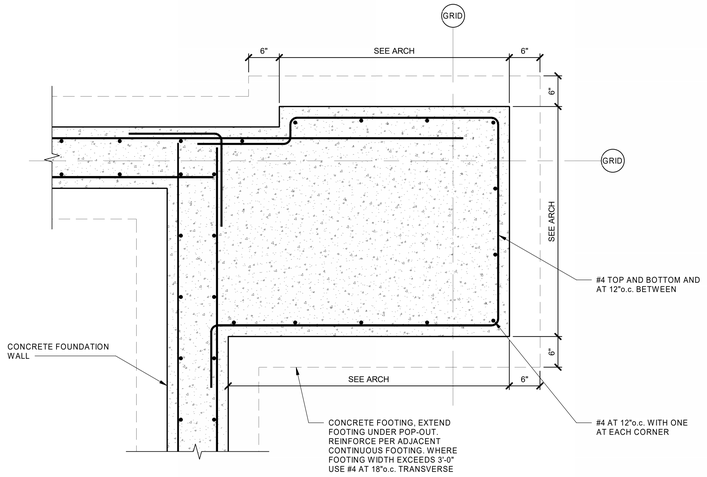

DETAIL
SCALE : NONE

1
S502

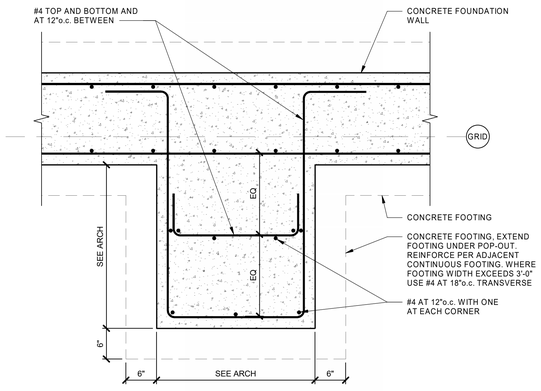

FOUNDATION POP-OUT CONFIGURATION AT BACK WALL
SCALE : NONE

2
S502

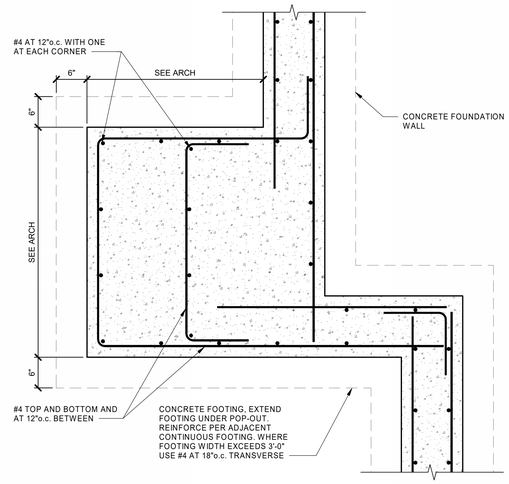

DETAIL
SCALE : NONE

3
S502

FOUNDATION POP-OUT CONFIGURATION AT ENTRIES
SCALE : NONE

4
S502

FOUNDATION POP-OUT CONFIGURATION AT FRONT OF BUILDING
SCALE : NONE

5
S502

bhd ARCHITECTS
www.bhdarchitects.com
Phone 801.571.0010
Fax 801.571.0303
Toll Free 888.571.0010
65 East Wadsworth Park Drive
Suite 205 Draper, Utah 84020

Matthew C. McBride No. 353893 8/14/24 STATE OF UTAH

THE CHURCH OF JESUS CHRIST OF LATTER-DAY SAINTS

Orem YSA 3rd 10 Ward Building
Orem UT YSA 3rd Stake

Approx. 1700 West 575 South
Vineyard, Utah 84059

Date: 15 Aug 2024
BID #: 2344
County Parcel: 39:228:0001
Plan Series: 2024 10 Ward SC
Owner #: 390-187a

Drawing Issue and Revision Schedule

#	Date	Description
1	15 Aug 2024	Bid Documents

FOUNDATION DETAILS

S502

C:\Users\jacksonp\Documents\S-23738-Orem YSA Custom-2025_jacksonpQEM82.rvt
Printed 8/19/2024 5:08:11 PM

HOLDOWN ANCHOR ATTACHMENT			
SIMPSON HOLD DOWN MODEL NO.	ATTACHMENT FASTENERS[2]	EMBEDMENT DEPTH[3]	ANCHOR BOLT[1,4,5]
HDU2	(6) SDS 1/4" x 2 1/2"	1'-6"	SB5/8X24
HDU5	(14) SDS 1/4" x 2 1/2"	1'-6"	SB5/8X24
HDU8	(20) SDS 1/4" x 2 1/2"	1'-6"	SB7/8X24
HDU11	(30) SDS 1/4" x 2 1/2"	1'-6"	SB1X30
HDU14	(36) SDS 1/4" x 2 1/2"	2'-0"	SB1X30
HD19	(5) 1"Ø BOLTS	1'-6"	SIMPSON PAB10

NOTES:

1. ALL FASTENERS FOR PRESERVATIVE AND TREATED WOOD SHALL BE HOT DIPPED ZINC COATED GALVANIZED STEEL, STAINLESS STEEL, SILICONE BRONZE OR COPPER, UNLESS WOOD IS BORATE TREATED. EXCEPTION: PLAIN CARBON STEEL FASTENERS, INCLUDING NUTS AND WASHERS IN SBX/DOT AND ZINC BORATE PRESERVATIVE-TREATED WOOD INSTALLED IN AN INTERIOR, DRY ENVIRONMENT ARE PERMITTED.
2. ALL WOOD COLUMNS TO BE NAILED OR BOLTED TOGETHER PER SCHEDULE ON S603 PRIOR TO HOLDOWN INSTALLATION.
3. EMBEDMENT DEPTH, *te*, IS TO BE FROM TOP OF FOUNDATION WALL OR BOTTOM OF SLAB ON GRADE.
4. HOLDOWN ANCHORS TO BE CENTERED IN STUD WALL AND TO HAVE 4" MIN. CLEARANCE TO FACE OF CONCRETE WALL.
5. WASHER TO BE 3/8" x 4" x 4".

HOLDOWN ANCHOR BOLT SCHEDULE — 1/S503
SCALE : NONE

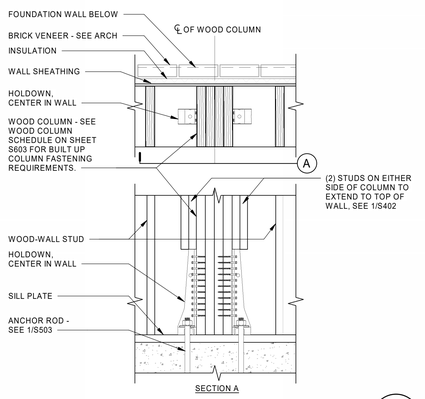

HOLDOWN AT STEEPLE ANCHORAGE — 6/S503
SCALE : NONE

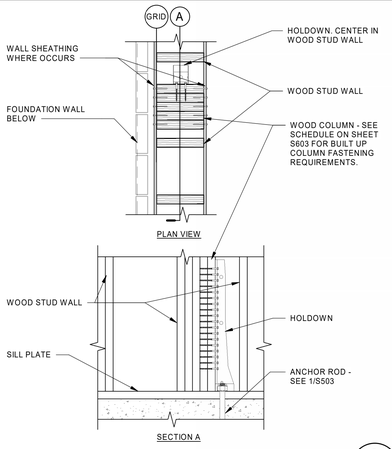

HOLDOWN AT MID-WALL — 2/S503
SCALE : NONE

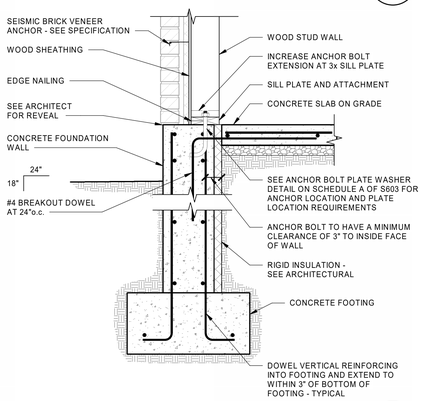

SECTION AT EXTERIOR WALL — 7/S503
SCALE : NONE

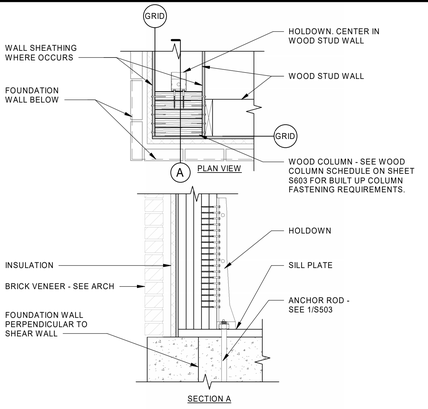

HOLDOWN AT CORNER — 3/S503
SCALE : NONE

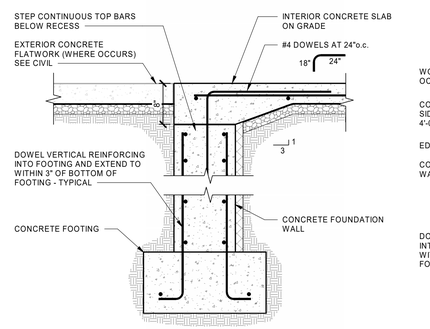

SECTION AT FOUNDATION WALL RECESS AT OPENINGS — 8/S503
SCALE : NONE

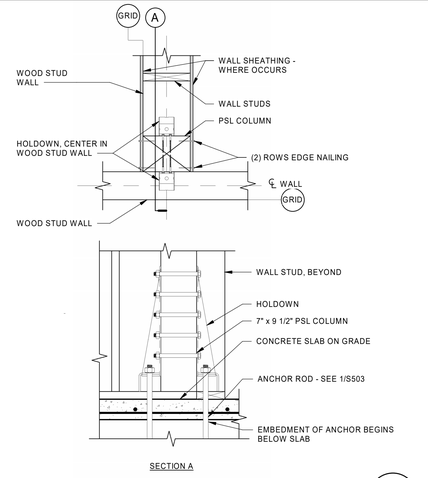

HOLDOWN AT INTERIOR SHEAR WALL — 4/S503
SCALE : NONE

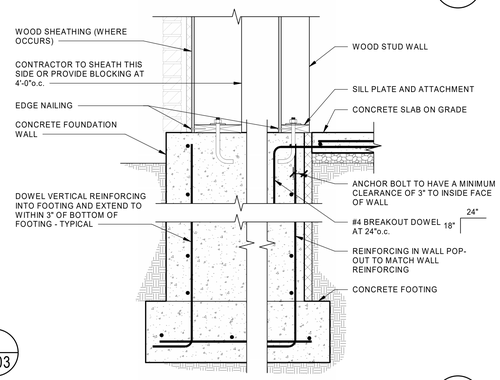

POP-OUT — 9/S503
SCALE : NONE

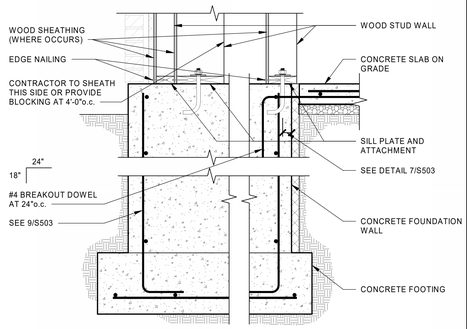

AT DOUBLE POP-OUT

DOUBLE WALL POP-OUT — 10/S503
SCALE : NONE

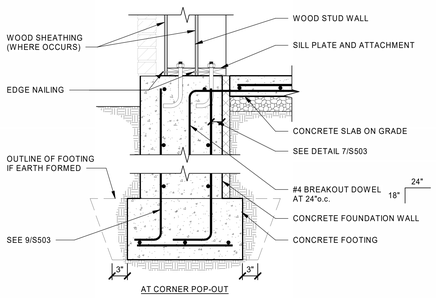

AT CORNER POP-OUT

NARROW POP-OUT — 11/S503
SCALE : NONE

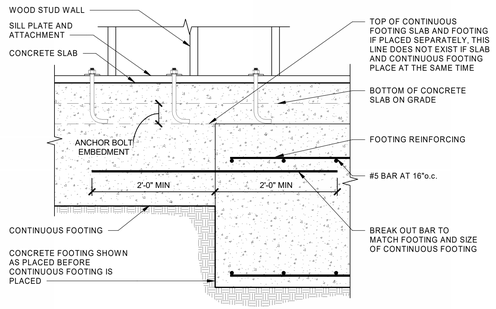

TYPICAL CONNECTION OF SPOT TO CONTINUOUS FOOTING WHEN FOOTINGS ARE PLACED AT DIFFERENT TIMES — 12/S503
SCALE : NONE

bhd ARCHITECTS
www.bhdarchitects.com
Phone 801.571.0010
Fax 801.571.0303
Toll Free 888.571.0010
65 East Wadsworth Park Drive
Suite 205 Draper, Utah 84020

Matthew C. McBride No. 353893 8/14/24 STATE OF UTAH

THE CHURCH OF JESUS CHRIST OF LATTER-DAY SAINTS

Orem YSA 3rd 10 Ward Building
Orem UT YSA 3rd Stake

Approx. 1700 West 575 South
Vineyard, Utah 84059

BHD #:	2344
Date:	15 Aug 2024
County Parcel:	35-228-0001
Plan Series:	2024 10 Ward SC
Owner #:	590-1876

Drawing Issue and Revision Schedule

No.	Date	Description
1	15 Aug 2024	Bid Documents

FOUNDATION DETAILS

S503

C:\Users\jacksonp\Documents\S-23738-Orem YSA Custom-2025_jacksonpQEMB2.rvt
Printed 8/19/2024 5:08:12 PM

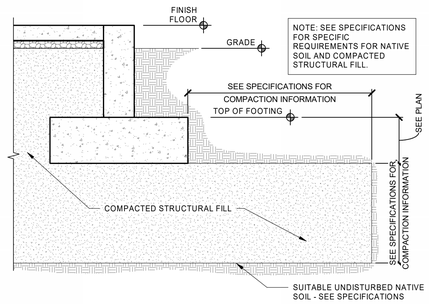

TYPICAL FOOTING OVER COMPACTED STRUCTURAL FILL

SCALE : NONE

1 S504

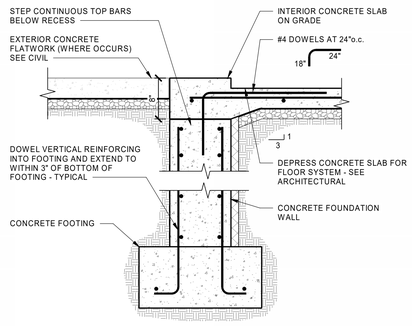

SECTION AT FOUNDATION WALL RECESS AT OPENINGS

SCALE : NONE

2 S504

bhd ARCHITECTS
www.bhdarchitects.com
Phone 801.571.0010
Fax 801.571.0303
Toll Free 888.571.0010
65 East Wadsworth Park Drive
Suite 205 Draper, Utah 84020

PROFESSIONAL ENGINEER Matthew C. McBride No. 353893 8/14/24 STATE OF UTAH

THE CHURCH OF JESUS CHRIST OF LATTER-DAY SAINTS

Orem YSA 3rd 10 Ward Building
Orem UT YSA 3rd Stake

Approx. 1700 West 575 South
Vineyard, Utah 84059

Date: 15 Aug 2024 | BHD #: 2344 | County Parcel: 59:228:0001 | Plan Series: 2024 10 Ward SC | Owner #: 396-187a

Drawing Issue and Revision Schedule		
#	Date	Description
1	15 Aug 2024	Bid Documents

FOUNDATION DETAILS

S504

C:\Users\jacksonp\Documents\S-23738-Orem YSA Custom-2025_jacksonpQEMB2.rvt
Printed 8/19/2024 5:08:13 PM

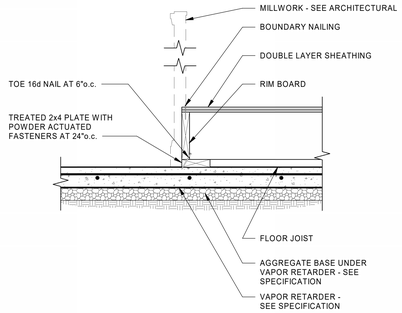

ROSTRUM FRONT EDGE

SCALE : NONE

1 / S511

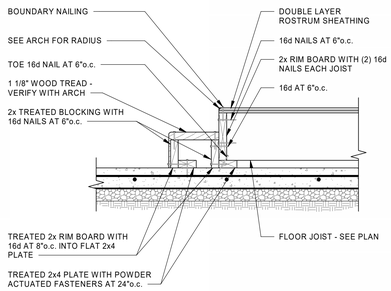

STAIRS

SCALE : NONE

2 / S511

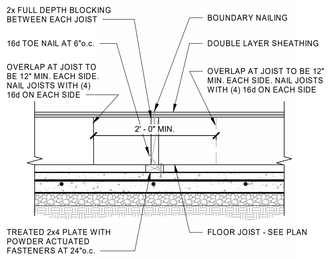

JOIST BEARING

SCALE : NONE

3 / S511

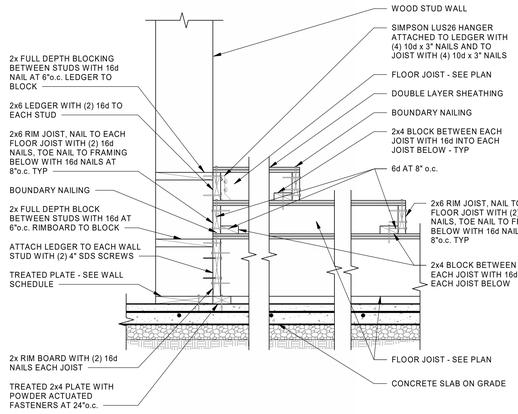

ROSTRUM OVERBUILD

SCALE : NONE

4 / S511

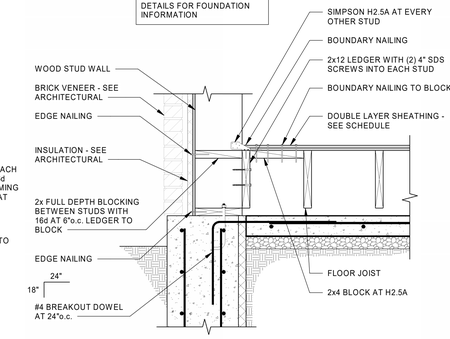

ROSTRUM DETAIL AT EXTERIOR WALL

SCALE : NONE

5 / S511

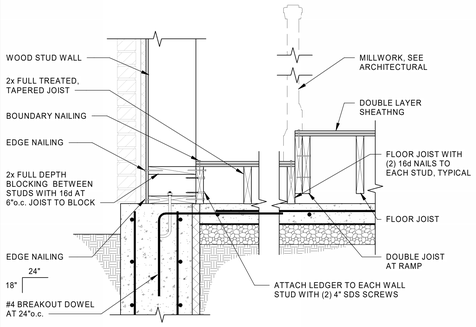

ROSTRUM RAMP AT EXTERIOR WALL

SCALE : NONE

6 / S511

NOT USED

DETAIL (NOT USED)

SCALE : NONE

7 / S511

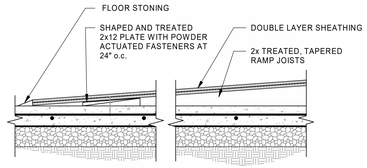

RAMP AT EDGE

SCALE : NONE

8 / S511

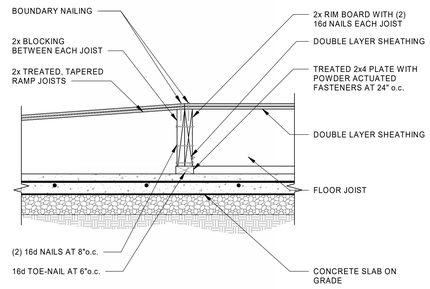

RAMP AT END

SCALE : NONE

9 / S511

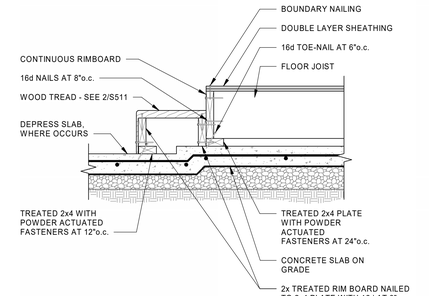

PLATFORM STAIRS

SCALE : NONE

10 / S511

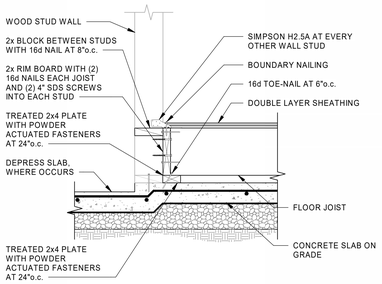

FRONT EDGE OF PLATFORM

SCALE : NONE

11 / S511

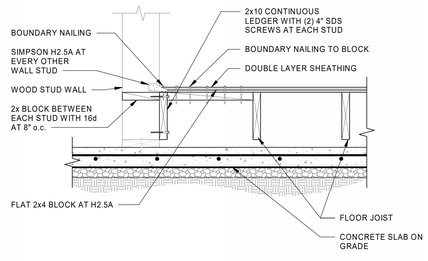

PLATFORM DETAIL AT WALL

SCALE : NONE

12 / S511

bhd ARCHITECTS
www.bhdarchitects.com
Phone 801.571.0010
Fax 801.571.0303
Toll Free 888.571.0010
65 East Wadsworth Park Drive
Suite 205 Draper, Utah 84020

Matthew C. McBride
No. 353893
8/14/24
STATE OF UTAH

THE CHURCH OF JESUS CHRIST OF LATTER-DAY SAINTS

Orem YSA 3rd 10 Ward Building
Orem UT YSA 3rd Stake

Approx. 1700 West 575 South
Vineyard, Utah 84059

Date: 15 Aug 2024
BHD #: 2344
County Parcel: 59:728:0001
Plan Series: 2024 10 Ward SC
Owner #: 390-187a

Drawing Issue and Revision Schedule		
#	Date	Description
1	15 Aug 2024	Bid Documents

ROSTRUM AND PLATFORM DETAILS

S511

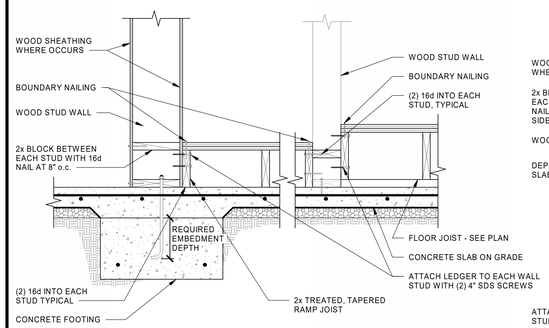

PLATFORM RAMP
SCALE : NONE
1 S512

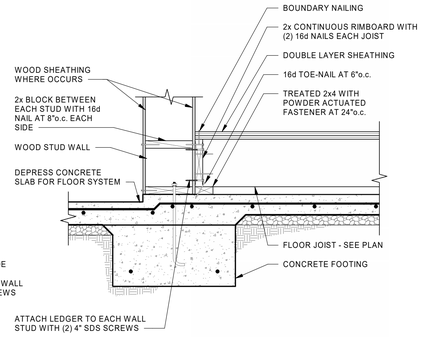

PLATFORM AT WALL
SCALE : NONE
2 S512

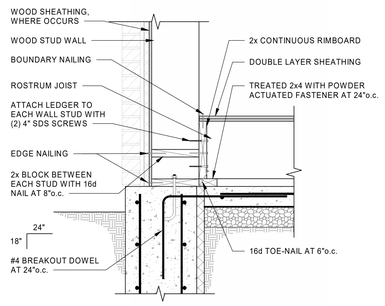

ROSTRUM AT EXTERIOR FRONT WALL
SCALE : NONE
3 S512

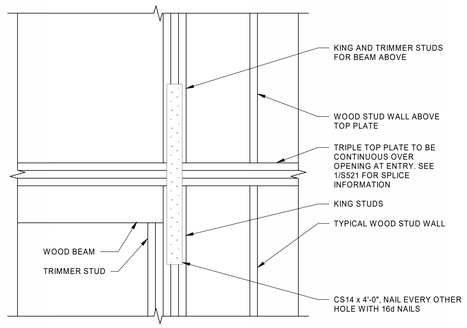

CONTINUITY OF TOP PLATES AT MAIN ENTRY
SCALE : NONE
5 S512

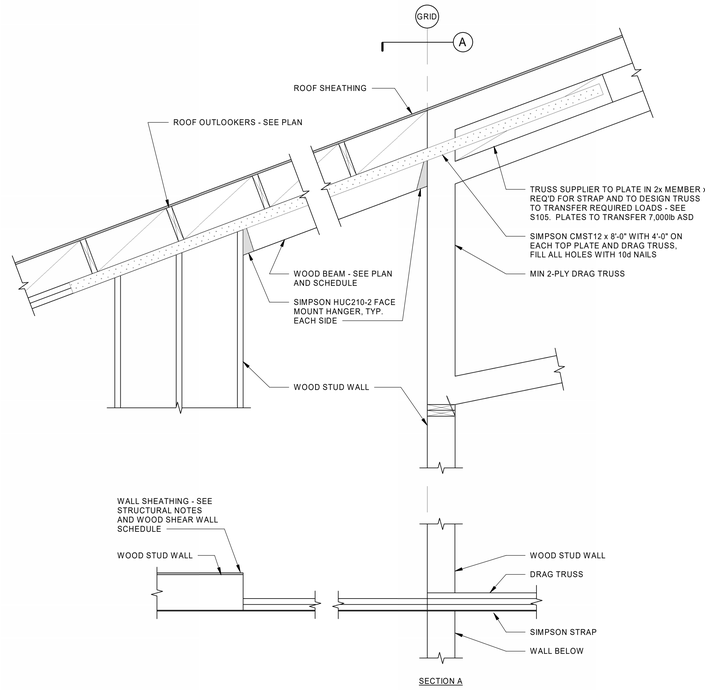

DRAG DETAIL
SCALE : NONE
4 S512

bhd ARCHITECTS
www.bhdarchitects.com
Phone 801.571.0010
Fax 801.571.0303
Toll Free 888.571.0010
65 East Wadsworth Park Drive
Suite 205 Draper, Utah 84020

Matthew C. McBride No. 353893 8/14/24 STATE OF UTAH

THE CHURCH OF JESUS CHRIST OF LATTER-DAY SAINTS

Orem YSA 3rd 10 Ward Building
Orem UT YSA 3rd Stake

Approx. 1700 West 575 South
Vineyard, Utah 84059

Date: 15 Aug 2024 | BHD #: 2344 | County Parcel: 59:228:0001 | Plan Series: 2024 10 Ward SC | Owner #: 396-187a

Drawing Issue and Revision Schedule

#	Date	Description
1	15 Aug 2024	Bid Documents

ROSTRUM AND PLATFORM DETAILS

S512

C:\Users\jacksonp\Documents\S-23738-Orem YSA Custom-2025_jacksonpQEMB2.rvt
Printed 8/19/2024 5:08:17 PM

NOT USED

DETAIL (NOT USED)
SCALE : NONE
1 / S513

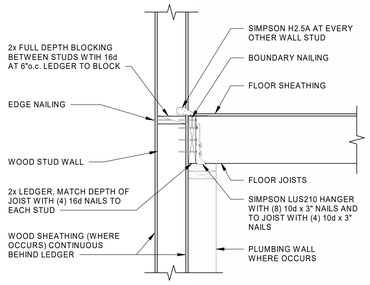

EQUIPMENT PLATFORM TO WALL CONNECTION
SCALE : NONE
2 / S513

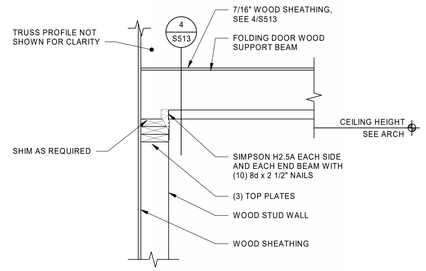

PARTITION DOOR SUPPORT AT EXTERIOR WALL
SCALE : NONE
3 / S513

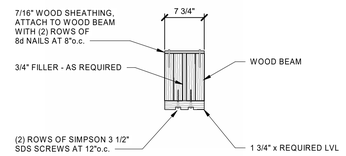

PARTITION DOOR BEAM SECTION
SCALE : NONE
4 / S513

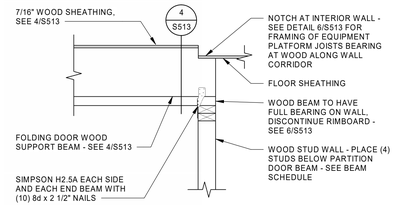

PARTITION DOOR SUPPORT AT INTERIOR WALL
SCALE : NONE
5 / S513

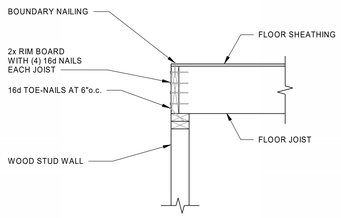

EQUIPMENT PLATFORM FLOOR JOISTS BEARING AT WOOD STUD WALL
SCALE : NONE
6 / S513

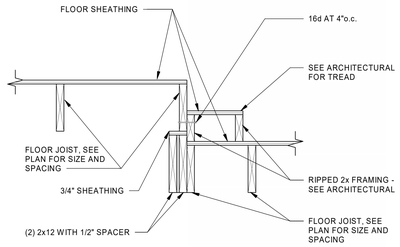

STEP IN EQUIPMENT PLATFORM
SCALE : NONE
7 / S513

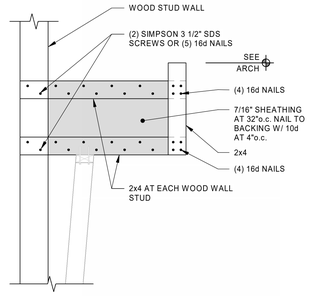

CHAPEL LIGHT COVE DETAIL
SCALE : NONE
8 / S513

NOT USED

DETAIL (NOT USED)
SCALE : NONE
9 / S513

NOT USED

DETAIL (NOT USED)
SCALE : NONE
10 / S513

NOT USED

DETAIL (NOT USED)
SCALE : NONE
11 / S513

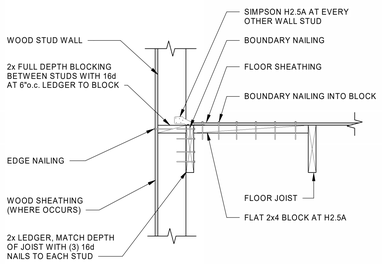

FLOOR EDGE CONDITION AT WALL
SCALE : NONE
12 / S513

bhd ARCHITECTS
www.bhdarchitects.com
Phone 801.571.0010
Fax 801.571.0303
Toll Free 888.571.0010
65 East Wadsworth Park Drive
Suite 205 Draper, Utah 84020

PROFESSIONAL ENGINEER — Matthew C. McBride — No. 353893 — 8/14/24 — STATE OF UTAH

THE CHURCH OF JESUS CHRIST OF LATTER-DAY SAINTS

Orem YSA 3rd 10 Ward Building
Orem UT YSA 3rd Stake

Approx. 1700 West 575 South
Vineyard, Utah 84059

Date: 15 Aug 2024 | BHD #: 2344 | County Parcel: 59:728:0001 | Plan Series: 2024 10 Ward SC | Owner #: 390-187a

Drawing Issue and Revision Schedule

#	Date	Description
1	15 Aug 2024	Bid Documents

EQUIPMENT PLATFORM FRAMING DETAILS

S513

C:\Users\jacksonp\Documents\S-23738-Orem YSA Custom-2025_jacksonpQEMB2.rvt
Printed 8/19/2024 5:08:18 PM

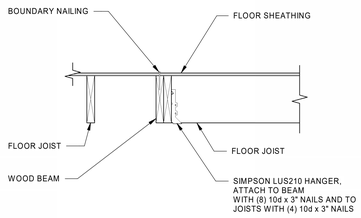

JOIST TO BEAM CONNECTION
SCALE : NONE — 1 / S514

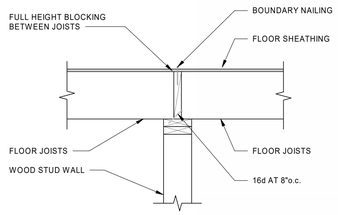

FLOOR JOISTS BEARING AT WALL
SCALE : NONE — 2 / S514

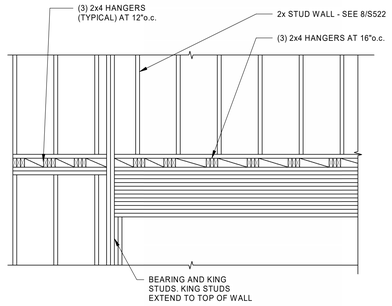

FOLDING PARTITION SECTION AT PLATFORM
SCALE : NONE — 3 / S514

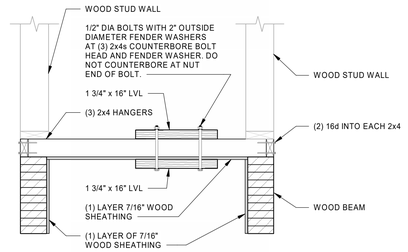

NOTE: SEE ARCH FOR DIMENSIONS AND ELEVATIONS

FOLDING PARTITION SECTION
SCALE : NONE — 4 / S514

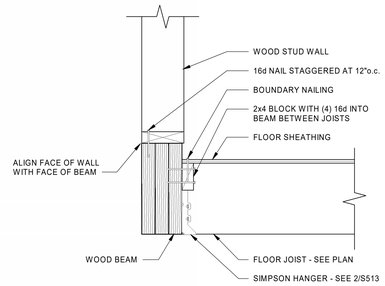

JOIST-TO-BEAM AT ENTRY
SCALE : NONE — 5 / S514

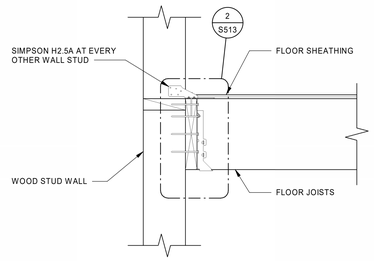

EQUIPMENT PLATFORM TO WALL CONNECTION
SCALE : NONE — 6 / S514

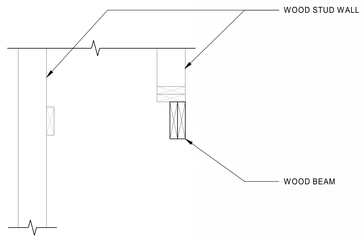

FOYER LIGHT COVE
SCALE : NONE — 7 / S514

NOT USED

DETAIL (NOT USED)
SCALE : NONE — 8 / S514

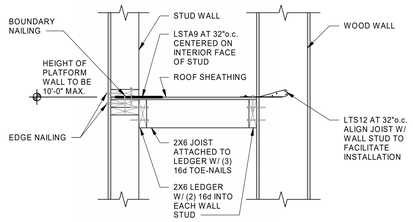

POP-OUT WALL BRACING TO BACK-UP WALL
SCALE : NONE — 9 / S514

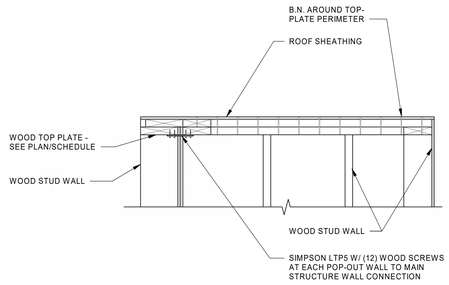

POP-OUT DETAIL
SCALE : NONE — 10 / S514

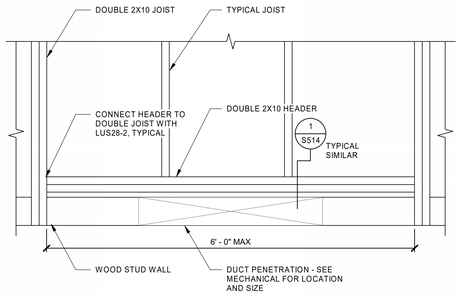

PLAN VIEW

DUCT PENETRATION AT BEARING WALL
SCALE : NONE — 11 / S514

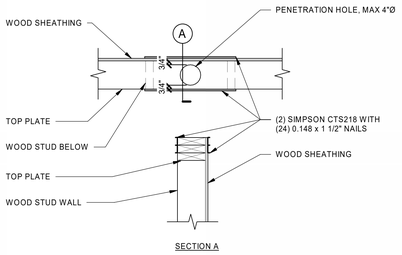

SECTION A

TOP PLATE REINFORCING AT GAS PIPE PENETRATION
SCALE : NONE — 12 / S514

bhd ARCHITECTS
www.bhdarchitects.com
Phone 801.571.0010
Fax 801.571.0303
Toll Free 888.571.0010
65 East Wadsworth Park Drive
Suite 205 Draper, Utah 84020

Matthew C. McBride No. 353893 8/14/24 STATE OF UTAH

THE CHURCH OF JESUS CHRIST OF LATTER-DAY SAINTS

Orem YSA 3rd 10 Ward Building
Orem UT YSA 3rd Stake
Approx. 1700 West 575 South
Vineyard, Utah 84059

Date: 15 Aug 2024 | BHD #: 2344 | County Parcel: 59:728:0001 | Plan Series: 2024 10 Ward SC | Owner #: 390-187a

Drawing Issue and Revision Schedule		
#	Date	Description
1	15 Aug 2024	Bid Documents

EQUIPMENT PLATFORM FRAMING DETAILS

S514

C:\Users\jacksonp\Documents\S-23738-Orem YSA Custom-2025_jacksonpQEMB2.rvt
Printed 8/19/2024 5:08:20 PM

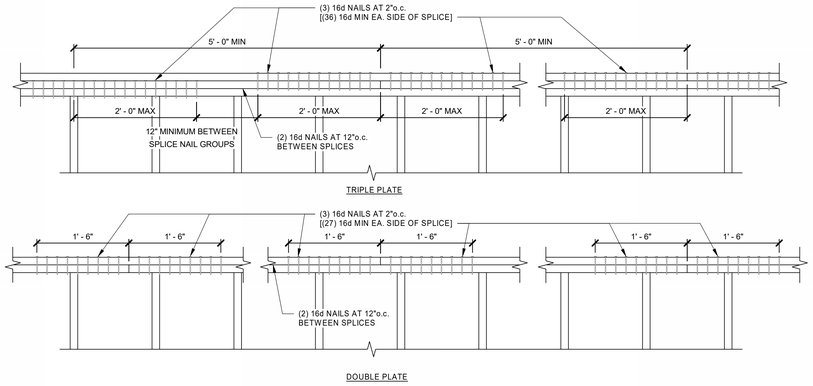

TYPICAL TOP PLATE SPLICE DETAIL

SCALE : NONE

1 S521

TOP PLATE SPLICE (2x6 WALLS ONLY) PENETRATIONS SCHEDULE	
HOLE SIZE	STRAPS
LESS THAN OR EQUAL TO 2 1/2" DIAMETER	NONE REQUIRED
GREATER THAN 2 1/2" DIAMETER AND LESS THAN OR EQUAL TO 3 1/2" DIAMETER	MSTC28 CENTERED BETWEEN (2) TOP PLATES WITH (16) 16d x 3 1/2" NAILS EACH END OF STRAP. DO NOT NAIL INTO PIPE.
NOTE: HOLE SIZE IS TOTAL ALLOWABLE HOLE DIAMETER, NOT PIPE DIAMETER. DO NOT OVERCUT.	

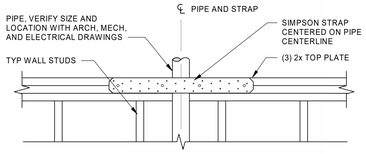

TYPICAL TOP PLATE SPLICE PENETRATION SCHEDULE

SCALE : NONE

2 S521

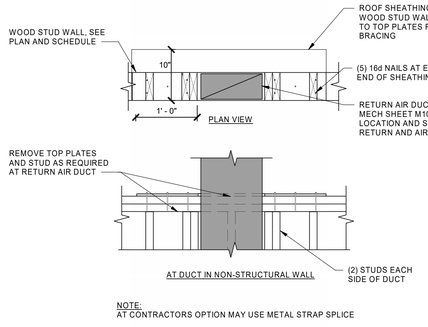

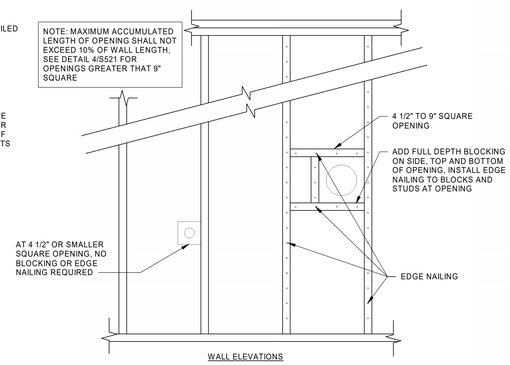

TYPICAL WALL PENETRATIONS LESS THAN 9" SQUARE

SCALE : NONE

3 S521

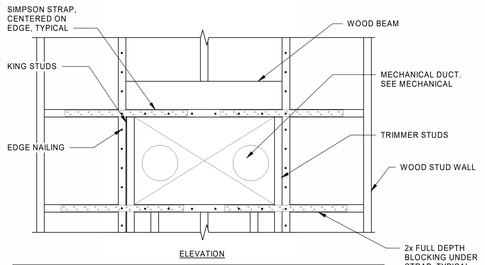

BEAM SPAN	BEAM SIZE	TRIMMER	KING STUD	SIMPSON STRAP	NAILS
1'-3'	(3) 2x6	(1) 2x	(1) 2x	CS20 x 2'-0"	(24) 8d x 2 1/2"
3'-5'	(3) 2x10	(1) 2x	(1) 2x	CS16 x 2'-0"	(36) 8d x 2 1/2"
5'-7'	(3) 2x12	(1) 2x	(1) 2x	CS16 x 2'-8"	(44) 8d x 2 1/2"

SEE DETAIL 3/S521 FOR OPENINGS < 9" SQUARE

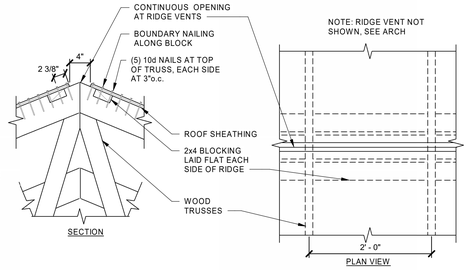

TYPICAL RIDGE DETAIL AT RIDGE VENT LOCATIONS

SCALE : NONE

5 S521

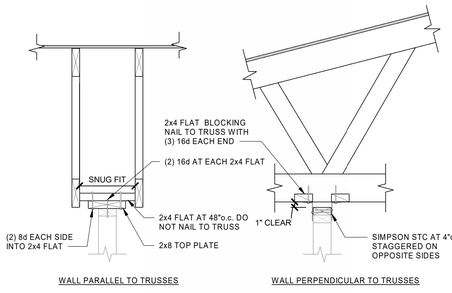

TYPICAL NON-STRUCTURAL WALL TO UNDERSIDE OF TRUSS

SCALE : NONE

6 S521

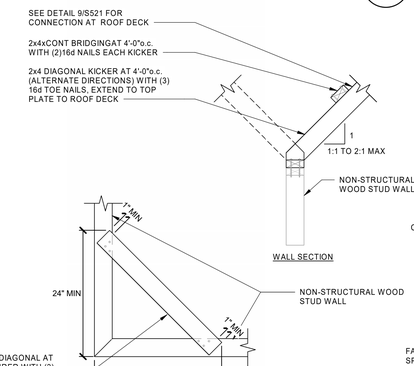

TYPICAL NON-STRUCTURAL PARTITION BRACING DETAILS

SCALE : NONE

7 S521

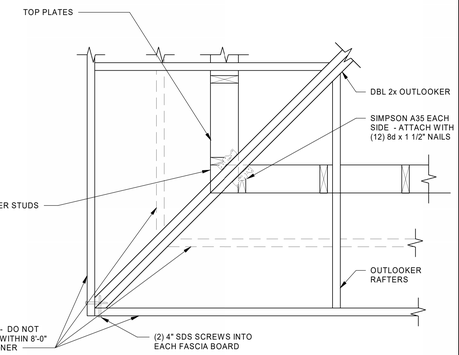

TYPICAL CORNER ROOF FRAMING PLAN VIEW

SCALE : NONE

8 S521

TYPICAL WALL PENETRATIONS SCHEDULE FOR PENETRATORS GREATER THAN 9" SQUARE

SCALE : NONE

4 S521

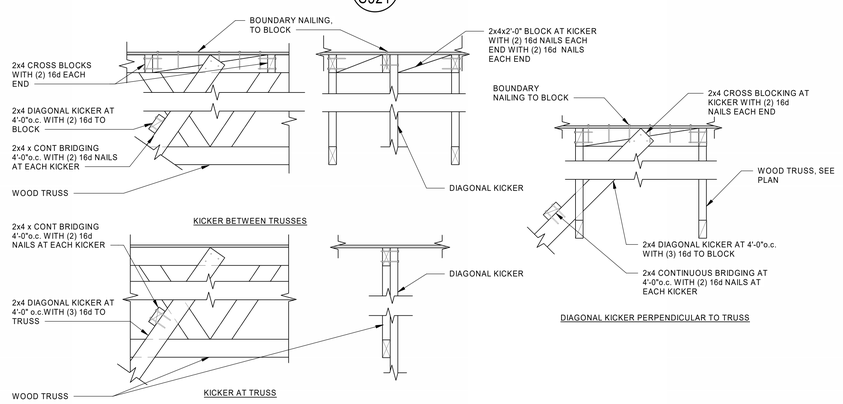

TYPICAL KICKER CONNECTIONS TO ROOF TRUSSES

SCALE : NONE

9 S521

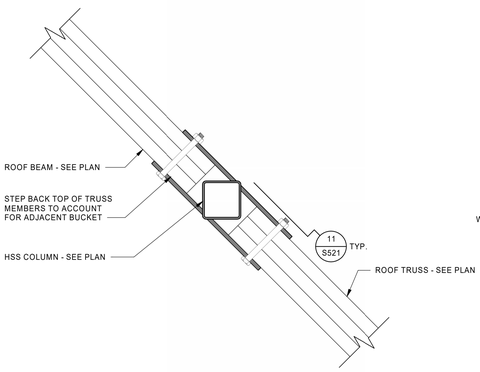

DETAIL

SCALE : NONE

10 S521

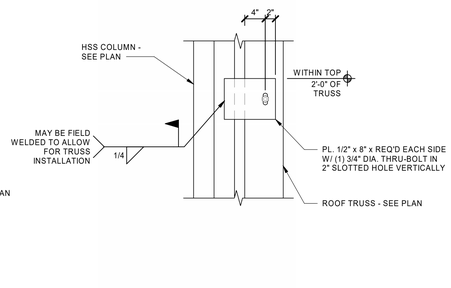

DETAIL

SCALE : NONE

11 S521

FABRICATOR NOTE:
PROVIDE TRUSS WIDTH +1/8" CLEARANCE BETWEEN SIDE PLATES

TRUSS MANUFACTURER NOTE:
NOTE BOLT LOCATIONS AND COORDINATE WITH TRUSS PRESS PLATES.

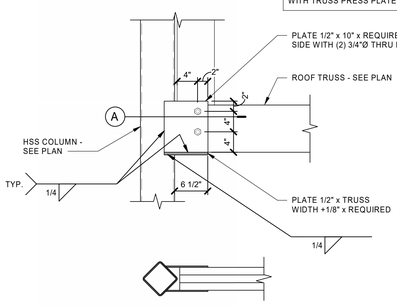

DETAIL

SCALE : NONE

12 S521

TYPICAL KICKER CONNECTIONS TO ROOF TRUSSES

SCALE : NONE

9 S521

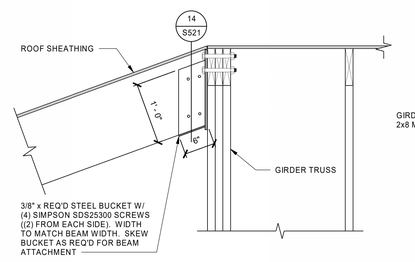

WOOD BEAM BEARING ON GIRDER TRUSS

SCALE : NONE

13 S521

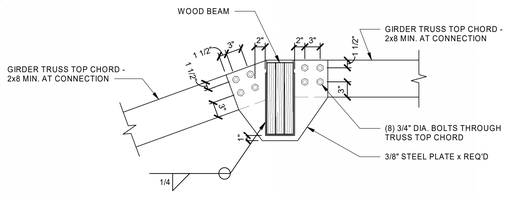

DETAIL

SCALE : NONE

14 S521

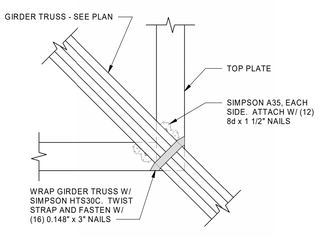

DETAIL

SCALE : NONE

15 S521

bhd ARCHITECTS
www.bhdarchitects.com
Phone 801.571.0010
Fax 801.571.0303
Toll Free 888.571.0010
65 East Wadsworth Park Drive
Suite 205 Draper, Utah 84020

Matthew C. McBride No. 353893 8/14/24 STATE OF UTAH

THE CHURCH OF JESUS CHRIST OF LATTER-DAY SAINTS

Orem YSA 3rd 10 Ward Building
Orem UT YSA 3rd Stake

Approx. 1700 West 575 South
Vineyard, Utah 84059

BHD #: 2344 | County Parcel: 39-228:0001 | Plan Series: 2024 10 Ward SC | Owner #: 590-1876

Date: 15 Aug 2024

Drawing Issue and Revision Schedule		
#	Date	Description
1	15 Aug 2024	Bid Documents

ROOF DETAILS

S521

C:\Users\jacksonp\Documents\S-23738-Orem YSA Custom-2025_jacksonpQEMB2.rvt
Printed 8/19/2024 5:08:21 PM

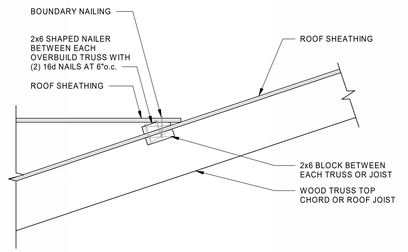

OVERBUILD BETWEEN EACH OVERBUILD TRUSS

SCALE : NONE

1 S522

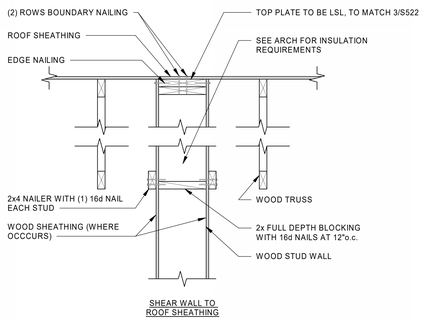

SHEAR WALL TO ROOF SHEATHING

INTERIOR SHEAR WALL TO ROOF CONNECTION

SCALE : NONE

2 S522

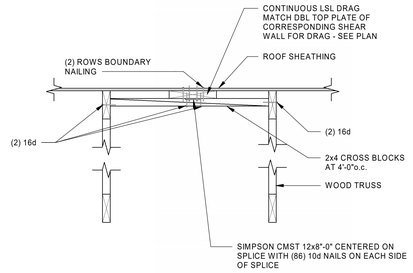

DRAG SUPPORT BETWEEN TRUSSES

SCALE : NONE

3 S522

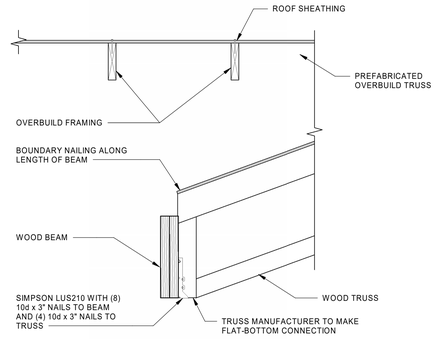

ROOF TRUSS TO BEAM CONNECTION

SCALE : NONE

4 S522

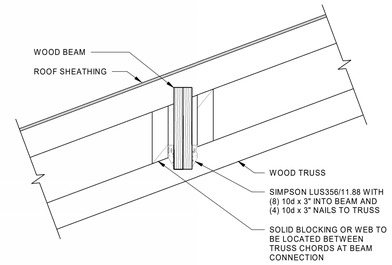

BEAM TO TRUSS AT BACK OVERBUILD

SCALE : NONE

5 S522

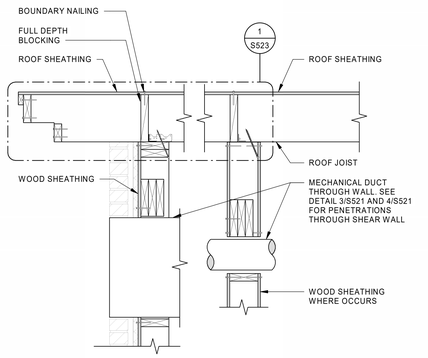

MECHANICAL PENETRATION AT WALL POP-OUT

SCALE : NONE

6 S522

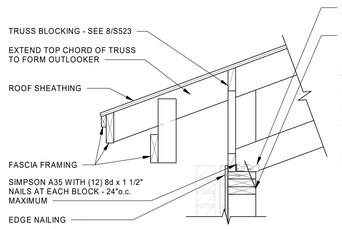

WOOD TRUSS BEARING AT EXTERIOR WALL

SCALE : NONE

7 S522

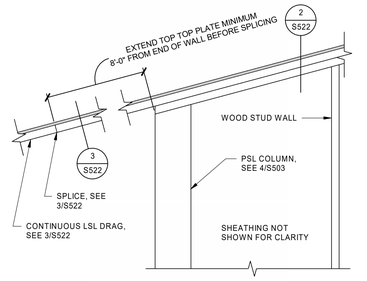

DRAG-TO-SHEAR WALL

SCALE : NONE

8 S522

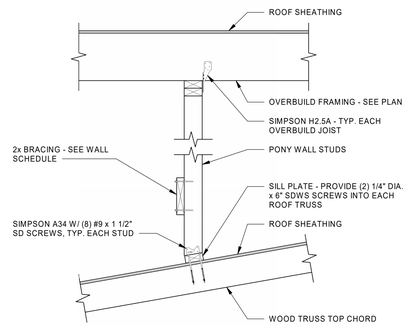

DETAIL

SCALE : NONE

9 S522

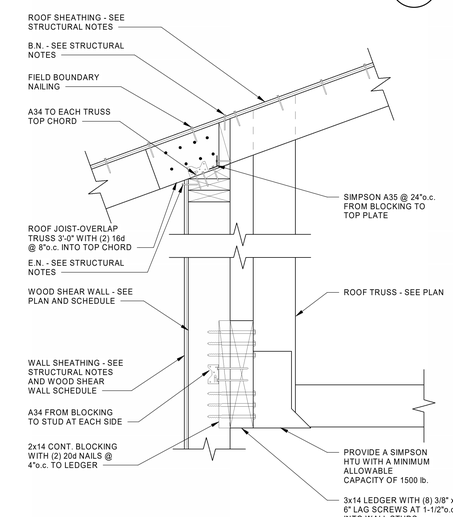

DETAIL

SCALE : NONE

10 S522

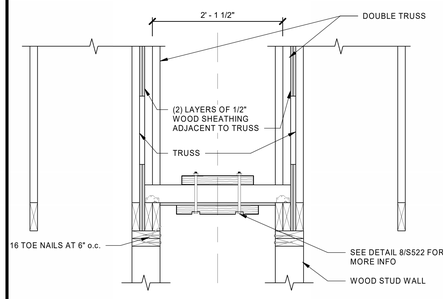

FOLDING PARTITION SECTION AT WALL

SCALE : NONE

11 S522

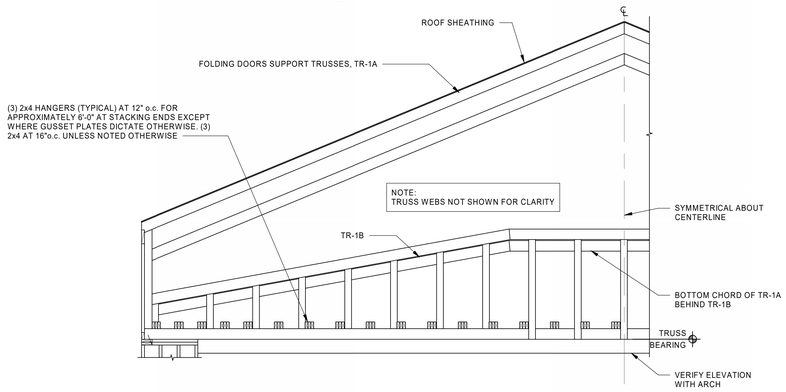

FOLDING PARTITION SECTION (BETWEEN CHAPEL AND CULTURAL HALL)

SCALE : NONE

12 S522

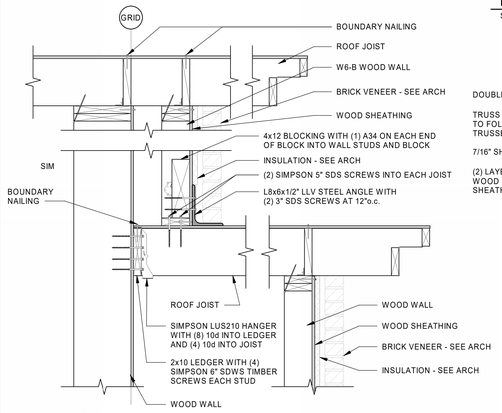

OUTLOOKER AND WALL POP-OUT AT BACK ENTRANCE

SCALE : NONE

13 S522

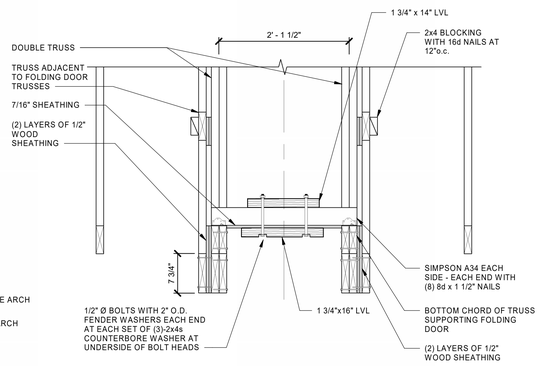

FOLDING PARTITION SECTION

SCALE : NONE

14 S522

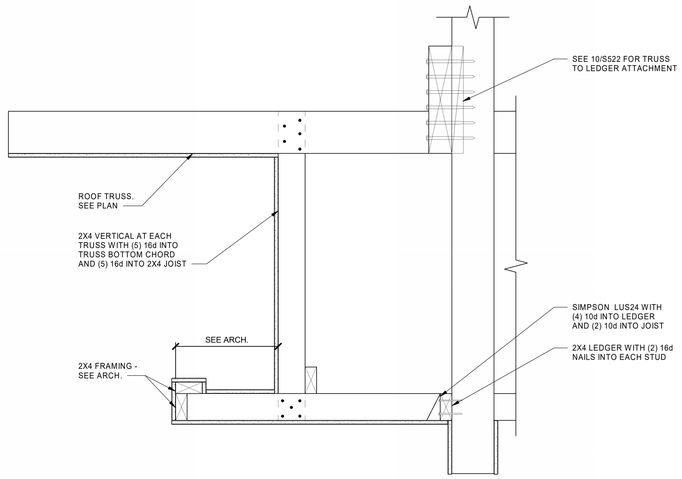

DETAIL

SCALE : NONE

15 S522

bhd ARCHITECTS
www.bhdarchitects.com
Phone 801.571.0010
Fax 801.571.0303
Toll Free 888.571.0010
65 East Wadsworth Park Drive
Suite 205 Draper, Utah 84020

Matthew C. McBride
No. 353893
8/14/24
PROFESSIONAL ENGINEER
STATE OF UTAH

THE CHURCH OF JESUS CHRIST OF LATTER-DAY SAINTS

Orem YSA 3rd 10 Ward Building
Orem UT YSA 3rd Stake

Approx. 1700 West 575 South
Vineyard, Utah 84059

Date: 15 Aug 2024
BHD #: 2344
County Parcel: 39:228:0001
Plan Series: 2024.10 Word SC
Owner #: 590-1876

#	Date	Description
1	15 Aug 2024	Bid Documents

Drawing Issue and Revision Schedule

ROOF DETAILS

S522

A35 SPACING	
GRID	SPACING
1	24"o.c.
2	12"o.c.
3	16"o.c.
OVERBUILDS	24"o.c.

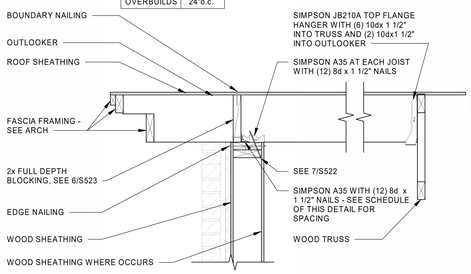

OUTLOOKER AT EXTERIOR WALL
SCALE : NONE — 1 / S523

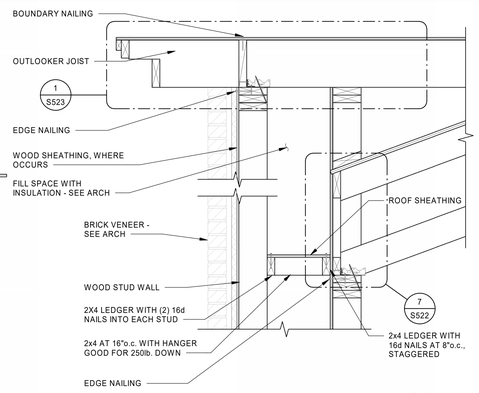

OUTLOOKER AT EXTERIOR WALL
SCALE : NONE — 2 / S523

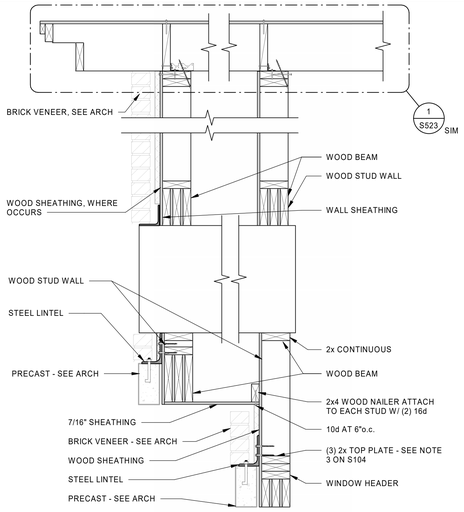

FRAMING AT MECHANICAL OPENING
SCALE : NONE — 3 / S523

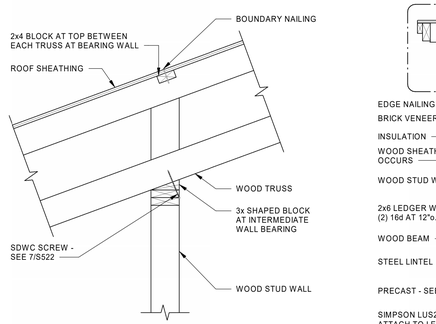

FRAMING AT ROOF POP-UP ON TRUSSES
SCALE : NONE — 4 / S523

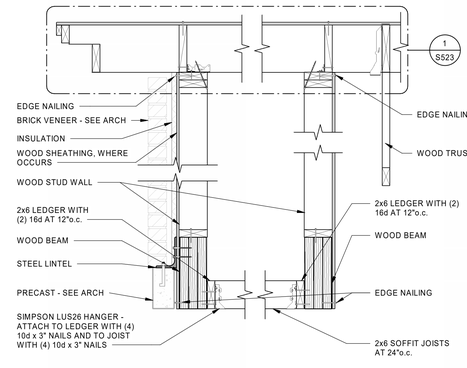

OUTLOOKER DETAIL AT ENTRY
SCALE : NONE — 5 / S523

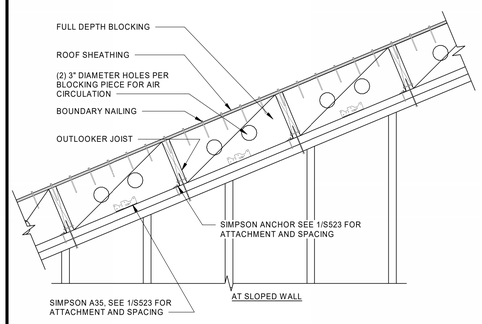

SOLID BLOCKING AND ANCHORING DETAIL
SCALE : NONE — 6 / S523

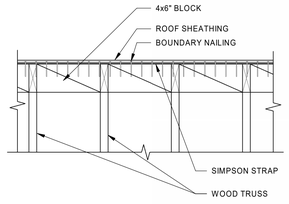

METAL COIL STRAP DETAIL
SCALE : NONE — 7 / S523

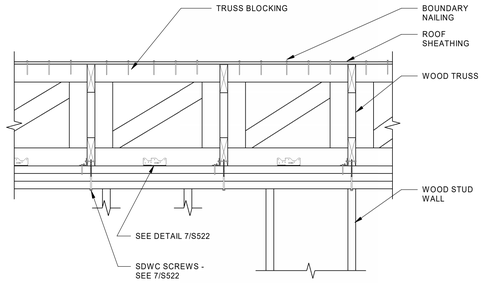

TRUSS BLOCKING AT LOW EXTERIOR WALL
SCALE : NONE — 8 / S523

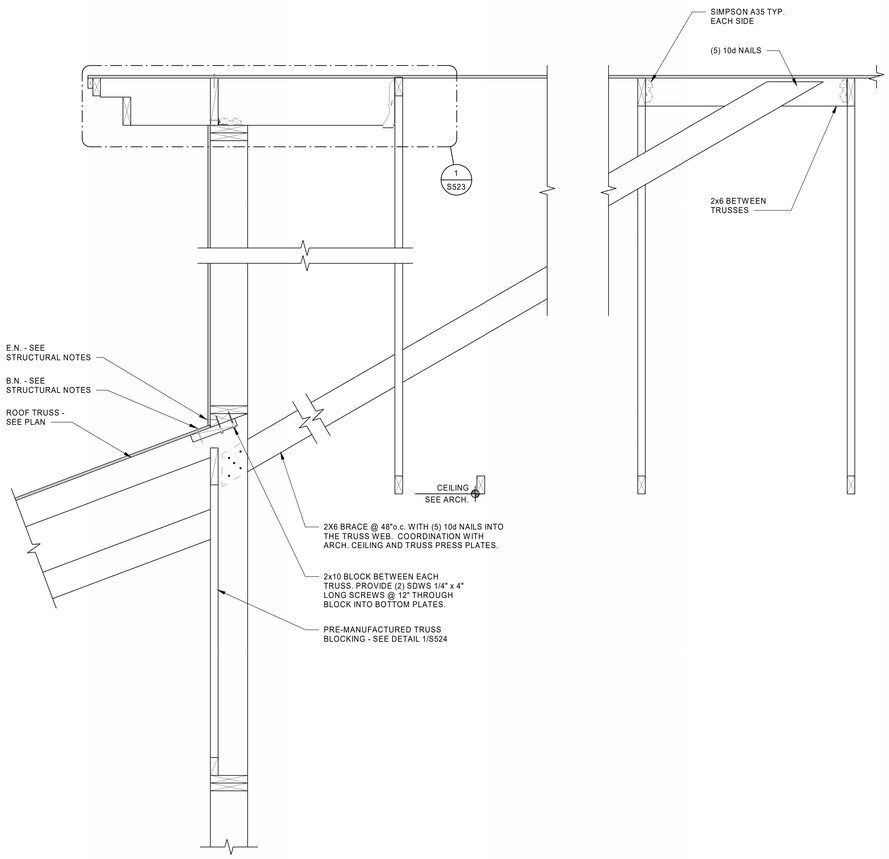

DETAIL
SCALE : NONE — 9 / S523

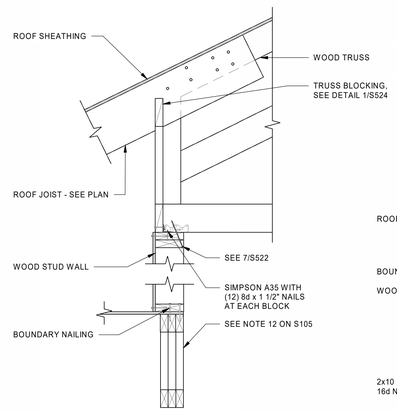

ROOF TRUSS AND OVERBUILD FRAMING
SCALE : NONE — 10 / S523

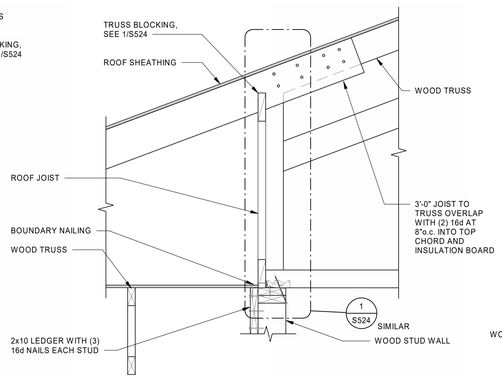

TRUSS OVERBUILD DETAIL
SCALE : NONE — 11 / S523

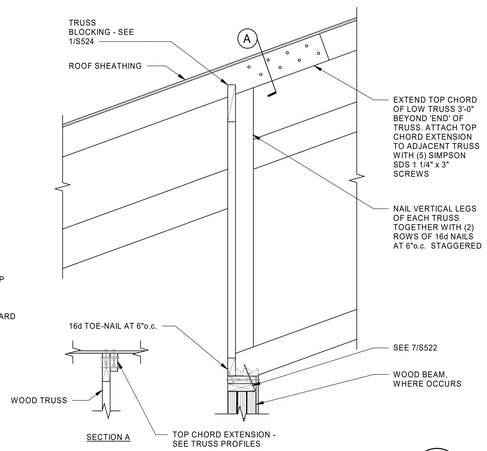

TRUSS BEARING AT INTERIOR WALL
SCALE : NONE — 12 / S523

bhd ARCHITECTS
www.bhdarchitects.com
Phone 801.571.0010
Fax 801.571.0303
Toll Free 888.571.0010
65 East Wadsworth Park Drive
Suite 205 Draper, Utah 84020

PROFESSIONAL ENGINEER — Matthew C. McBride — No. 353893 — 8/14/24 — STATE OF UTAH

THE CHURCH OF JESUS CHRIST OF LATTER-DAY SAINTS

Orem YSA 3rd 10 Ward Building
Orem UT YSA 3rd Stake
Approx. 1700 West 575 South
Vineyard, Utah 84059

Date: 15 Aug 2024 | BHD #: 2344 | County Parcel: 39-228-0001 | Plan Series: 2024 10 Ward SC | Owner #: 390-187a

Drawing Issue and Revision Schedule

#	Date	Description
1	15 Aug 2024	Bid Documents

ROOF DETAILS

S523

C:\Users\jacksonp\Documents\S-23738-Orem YSA Custom-2025_jacksonpQEM82.rvt
Printed 8/19/2024 5:08:25 PM

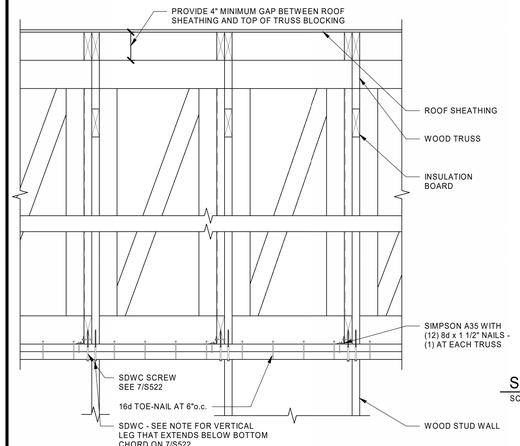

TRUSS BLOCKING AT INTERIOR BEARING

SCALE : NONE

1 / S524

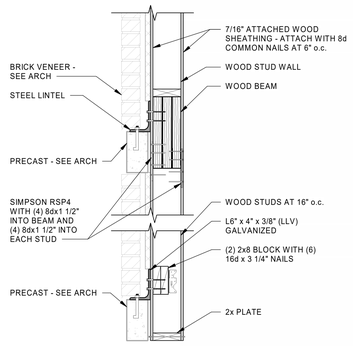

SUSPENDED ELEMENT AT OPENING

SCALE : NONE

2 / S524

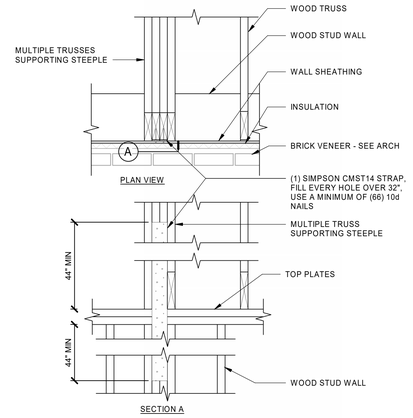

ANCHORAGE OF STEEPLE SUPPORT TRUSSES TO WALL

SCALE : NONE

3 / S524

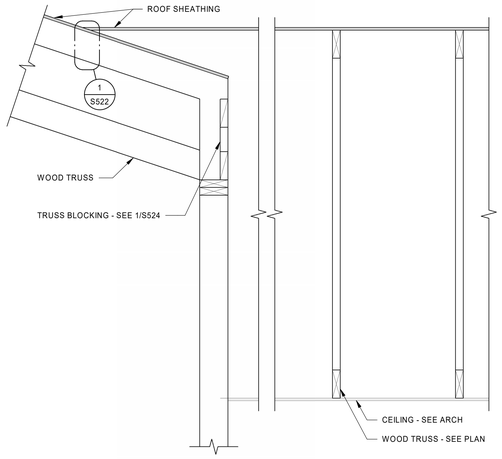

BEARING AT TR-3 AT ENTRY

SCALE : NONE

4 / S524

bhd ARCHITECTS
www.bhdarchitects.com
Phone 801.571.0010
Fax 801.571.0303
Toll Free 888.571.0010
65 East Wadsworth Park Drive
Suite 205 Draper, Utah 84020

Matthew C. McBride No. 353893 8/14/24 STATE OF UTAH

THE CHURCH OF JESUS CHRIST OF LATTER-DAY SAINTS

Orem YSA 3rd 10 Ward Building
Orem UT YSA 3rd Stake

Approx. 1700 West 575 South
Vineyard, Utah 84059

Date: 15 Aug 2024 | BHD #: 2344 | County Parcel: 59:228:0001 | Plan Series: 2024 10 Ward SC | Owner #: 396-187a

Drawing Issue and Revision Schedule

#	Date	Description
1	15 Aug 2024	Bid Documents

ROOF DETAILS

S524

C:\Users\jacksonp\Documents\S-23738-Orem YSA Custom-2025_jacksonpQEMB2.rvt
Printed 8/19/2024 5:08:27 PM

SCHEDULE A

DESIGN CRITERIA

DESIGN CRITERIA	2018 INTERNATIONAL BUILDING CODE (ASCE 7)	2021 IBC
SEISMIC	RISK CATEGORY	III
	IBC SEISMIC IMPORTANCE FACTOR	I_E = 1.25
	MAPPED SPECTRAL RESPONSE ACCELERATION:	
	MAPPED VALUE OF S_S (FOR ALL CALCULATIONS EXCEPT C_S)	S_S = 1.311 g
	VALUE OF S_S USED TO CALCULATE C_S (LIMIT S_S TO 1.5 PER ASCE7)	S_S = 1.311 g
	S_1	S_1 = 0.474 g
	SOIL SITE CLASS	D (DEFAULT)
	SITE COEFFICIENT, F_a	F_a = 1.2
	SITE COEFFICIENT, F_v	F_v = 1.826
	DESIGN SPECTRAL RESPONSE ACCELERATION PARAMETERS	S_{DS} = 1.049 g S_{D1} = 0.577 g
	SEISMIC DESIGN CATEGORY	D
	BASIC SEISMIC-FORCE RESISTING SYSTEM.	LIGHT FRAMED WALLS SHEATHED WITH WOOD PANELS
	RESPONSE MODIFICATION FACTOR	R = 6.5
	OVERSTRENGTH FACTOR	Ω_0 = 2.5
	ANALYSIS PROCEDURE USED.	ASCE 7 EQUIVALENT LATERAL FORCE PROCEDURE
	SEISMIC RESPONSE COEFFICIENT - ULTIMATE	C_S = 0.202 g
WIND	ASCE 7 DIRECTIONAL PROCEDURE, PART 1	
	WIND SPEED (3 SECOND GUST)	109 M.P.H.
	INTERNAL PRESSURE COEFFICIENT	±0.18
	EXPOSURE CATEGORY	C
ROOF	DEAD LOAD	20 P.S.F.
	SNOW IMPORTANCE FACTOR	I_S = 1.10
	GROUND SNOW LOAD, P_g	31 P.S.F.
	FLAT ROOF SNOW LOAD, P_f	21.5 P.S.F.
	SNOW EXPOSURE FACTOR, C_e	0.9
	THERMAL FACTOR, C_t	1.0
	SLOPE FACTOR, C_s	1.0
	ROOF SNOW LOAD - THIS LOAD REFLECTS ROOF SNOW LOAD MULTIPLIED BY THE SNOW IMPORTANCE FACTOR (VALUE SHOWN DOES NOT INCLUDE DRIFT LOAD)	21.5 P.S.F.
	BUILDING SITE ELEVATION	4,540 ft
	ROOF RAIN LOAD	1.61 in/hr
EQUIPMENT PLATFORM	DEAD LOAD	15 P.S.F.
	LIVE LOAD	40 P.S.F.
ROSTRUM	DEAD LOAD	15 P.S.F.
	LIVE LOAD	100 P.S.F.
PLATFORM	DEAD LOAD	15 P.S.F.
	LIVE LOAD	125 P.S.F.
SOIL BEARING	GSH GEOTECHNICAL REPORT NO. 0153-538-23 - DATE: AUGUST 2, 2024	2500 P.S.F.
WIND (STEEPLE)	ASCE 7 SECTION 29.4 - OTHER STRUCTURES	
	WIND SPEED	109 M.P.H.
	FORCE COEFFICIENT, Cf	1.37

SCHEDULE B

LEGEND

BOB	BOTTOM OF BEAM		INDICATES SIDE WHERE INTERIOR WOOD WALL SHEATHING IS TO BE INSTALLED
BLW ABV	INDICATES FLOOR OFFSET, SEE DETAILS		DETAIL NUMBER DETAIL SHEET
BM-x	INDICATES WOOD BEAM. SEE SCHEDULE		INDICATES DEPRESSED SLAB, SEE ARCHITECTURAL PLANS.
CB-x	INDICATES CONCRETE BEAM TYPE, SEE SCHEDULE	S — S	INDICATES FOOTING STEP
CJ	INDICATES CONTROL JOINT		INDICATES NON-STRUCTURAL WOOD STUD WALL
CW-x	INDICATES CONCRETE WALL, SEE SCHEDULE		INDICATES WOOD BEAM OR HEADER
EOS	EDGE OF SLAB		INDICATES WOOD ROOF OR FLOOR SHEATHING, SEE PLAN AND SCHEDULE
EF	EACH FACE		INDICATES STRUCTURAL WOOD SHEAR WALL
FC-x	INDICATES CONCRETE CONTINUOUS FOOTING TYPE, SEE SCHEDULE		TYPE 1 BLOCKED DIAPHRAGM - SEE SCHEDULE ON S604
FR-x	INDICATES CONCRETE RECTANGULAR FOOTING TYPE, SEE SCHEDULE	HD POSTANCHOR	HD - SIMPSON HOLDOWN SIZE POST - SIZE OF END POST CONNECTED TO HOLDOWN ANCHOR - ANCHOR SIZE
FS-x	INDICATES CONCRETE SPOT FOOTING TYPE, SEE SCHEDULE		
LSL LVL	LAMINATED STRAND LUMBER LAMINATED VENEER LUMBER		
SCL	INDICATES STRUCTURAL COMPOSITE LUMBER SUCH AS LVL AND LSL		
SC-x	INDICATES STEEL COLUMN TYPE		
TOF	TOP OF FOOTING		
TOS	TOP OF SLAB		
TOW	TOP OF WALL		
TR-X	INDICATES WOOD TRUSS, SEE ELEVATIONS ON S20X		
WC-x	INDICATES WOOD COLUMN. SEE SCHEDULE		
WIJ-x	INDICATES WOOD I-JOIST. SEE SCHEDULE		
Wx-x	INDICATES WOOD WALL. SEE SCHEDULE		

SCHEDULE H

SCHEDULE OF CONSTRUCTION MATERIALS

CONCRETE	LOCATION	28 - DAY COMPRESSIVE STRENGTH
	EXTERIOR CONCRETE	4,500 P.S.I. MIX TYPE E
	FOOTINGS	3,000 P.S.I. MIX TYPE A
	FOUNDATION WALLS (EXPOSED TO FREEZING AND DE-ICERS)	4,500 P.S.I. MIX TYPE E
	FOUNDATION WALLS (NOT EXPOSED TO FREEZING AND DE-ICERS)	4,000 P.S.I. MIX TYPE D
	INTERIOR SLABS ON GRADE	3,500 P.S.I. MIX TYPE B
	NOTES: 1. CONCRETE STRENGTH USED IN DESIGN IS 2500 P.S.I.	2. SEE SPECIFICATIONS 03-3111 FOR DEFINITION OF MIX TYPE.
REINFORCING STEEL	FIELD BENT BARS	ALL OTHER BARS
	ASTM A615, GRADE 40 OR GRADE 60 (SEE LAP SPLICE SCHEDULE D/S602 FOR LAP LENGTHS)	ASTM A615, GRADE 60 (SEE LAP SPLICE SCHEDULE D/S602 FOR LAP Lengths)

WOOD[1,2,3,4] — DIMENSION LUMBER

APPLICATION	SPECIES GROUP AND MINIMUM GRADE (ANY SPECIES AND GRADE LISTED MAY BE USED FOR ANY OF THE DESCRIBED APPLICATIONS).		
TOP PLATES, STRUTS, ROOF JOISTS, FLOOR JOISTS, MISC. FRAMING, HEADERS, BEAMS, LEDGERS	DOUGLAS FIR-LARCH HEM FIR SOUTHERN PINE MSR	#2 OR BETTER #1 OR BETTER #2 OR BETTER 1650F - 1.5E OR BETTER	
BLOCKING	DOUGLAS FIR-LARCH HEM FIR SOUTHERN PINE MSR	#2 OR BETTER #2 OR BETTER #2 OR BETTER 1650F - 1.5E OR BETTER	
POSTS AND TIMBERS 5" x 5" AND LARGER	DOUGLAS FIR-LARCH SOUTHERN PINE	#1 OR BETTER #1 OR BETTER	
SILL PLATES	DOUGLAS FIR-LARCH HEM FIR SOUTHERN PINE SCL	2x4, 1 1/2"x3 1/2" SCL STANDARD OR BETTER STANDARD OR BETTER STANDARD OR BETTER 1.3E	2x6, 2x8, 2x10, 1 1/2"x9 1/2" SCL, 1 1/2"x11 7/8" SCL #2 OR BETTER #2 OR BETTER #2 OR BETTER 1.5E
TRUSSED RAFTERS (CHORDS AND WEBS)	SPRUCE PINE FIR DOUGLAS FIR-LARCH HEM FIR SOUTHERN PINE MSR	#2 OR BETTER #2 OR BETTER #1 OR BETTER #2 OR BETTER 165F - 1.5E OR BETTER	
EXTERIOR WALL STUDS AND INTERIOR STRUCTURAL WALL STUDS	DOUGLAS FIR-LARCH HEM FIR SOUTHERN PINE SCL	2x4 #2 OR BETTER #1 OR BETTER #2 OR BETTER	2x6 #2 OR BETTER #1 OR BETTER #2 OR BETTER
INTERIOR NON-STRUCTURAL WALL STUDS	DOUGLAS FIR-LARCH HEM FIR SOUTHERN PINE	2x4 STANDARD, UTILITY, CONSTRUCTION, OR BETTER STANDARD, UTILITY, CONSTRUCTION, OR BETTER STANDARD, UTILITY, CONSTRUCTION, OR BETTER	2x6 #2 OR BETTER #2 OR BETTER #2 OR BETTER

STRUCTURAL COMPOSITE LUMBER (SCL) SUCH AS LVL AND LSL

	MINIMUM PROPERTY VALUES[1] - P.S.I.				
	Fb	Fv	Fc⊥	Fc∥	E x 10^6
1-1/2" x = 5-1/2" (SEE NOTE 4 AND 5)	1,700	220	575	1,400	1.3
1-1/2" x ALL OTHER DEPTHS (SEE NOTE 4 AND 5)	2,250	220	575	1,950	1.5
1-3/4" x ALL DEPTHS	2,600	285	750	2,350	1.9
3-1/2" x ALL DEPTHS	1,700	285	680	1,400	1.3

GLU-LAM COLUMNS

	MINIMUM PROPERTY VALUES[1] - P.S.I.				
	Fb	Fv	Fc⊥	Fc∥	E x 10^6
5 1/8" x ALL DEPTHS	2,400	265	650	1,800	2.0

GLUED LAMINATED BEAMS

	MINIMUM PROPERTY VALUES[1] - P.S.I.				
	Fb TENSION ZONE	Fb COMPRESSION ZONE STRESSED IN TENSION	Fv	Fc	E x 10^6
24F-V4 DF/DF OR 24F-E4 SP/SP WITH STRESS CLASS 24F-1.9E EXCEPT AT BM, USE 24F-V8	2400	2400	265	1600	1.8

NOTES:
1. DESIGN VALUES ARE FOR NORMAL DURATION, REPETITIVE FRAMING FACTORS AND SIZE FACTORS HAVE NOT BEEN APPLIED.
2. 1 3/4" MEMBERS MAY BE USED TO REPLACE 1 1/2" SCL MEMBERS. ADJUST DIMENSIONS IN PLANS AND DETAILS ACCORDINGLY.
3. LIMIT THE MODULUS OF ELASTICITY OF 1 1/2" LSL MEMBERS TO 1.55x10^6 psi.
4. LSL WOOD IS HARDER AND DENSER THAN LVL WOOD. FRAMER MUST HAVE EQUIPMENT THAT WILL DRIVE NAILS COMPLETELY INTO WOOD.

bhd ARCHITECTS
www.bhdarchitects.com
Phone 801.571.0010
Fax 801.571.0303
Toll Free 888.571.0010
65 East Wadsworth Park Drive
Suite 205 Draper, Utah 84020

PROFESSIONAL ENGINEER — Matthew C. McBride — No. 353893 — 8/14/24 — STATE OF UTAH

THE CHURCH OF JESUS CHRIST OF LATTER-DAY SAINTS

Orem YSA 3rd 10 Ward Building
Orem UT YSA 3rd Stake

Approx. 1700 West 575 South
Vineyard, Utah 84059

Owner #: 590-18/A
Plan Series: 2024 10 Ward SC
County Parcel: 39-226:0001
BHD #: 2344
Date: 15 Aug 2024

Drawing Issue and Revision Schedule

#	Date	Description
	15 Aug 2024	Bid Documents

SCHEDULES

S601

C:\Users\jacksonp\Documents\S-23738-Orem YSA Custom-2025_jacksonpQEMB2.rvt
Printed 8/19/2024 5:08:28 PM

SCHEDULE A

CONCRETE FOOTING SCHEDULE

MARK*	WIDTH	LENGTH	DEPTH	REINFORCING CROSSWISE				REINFORCING LENGTHWISE				REMARKS
				NO.	SIZE	LENGTH	SPACING	NO.	SIZE	LENGTH	SPACING	
FC1.5	1'-6"	CONT.	1'-0"	-	-	-	-	2	#4	CONT.	12"o.c.	
FC2.0	2'-0"	CONT.	1'-0"	-	-	-	-	3	#4	CONT.	EQUAL	
FC4.0	4'-0"	CONT.	1'-0"	-	-	-	-	5	#4	CONT.	EQUAL	
FS2.5	2'-6"	2'-6"	1'-0"	3	#5	2'-0"	EQUAL	3	#5	2'-0"	EQUAL	
FS4.0	4'-0"	4'-0"	1'-0"	5	#5	3'-6"	EQUAL	5	#5	3'-6"	EQUAL	
FS6.5	6'-6"	6'-6"	2'-0"	7	#5	6'-0"	EQUAL	7	#5	6'-0"	EQUAL	REINFORCE TOP AND BOTTOM
FS8X4	8'-0"	4'-0"	1'-6"	9	#6	3'-6"	EQUAL	5	#6	7'-6"	EQUAL	REINFORCE TOP AND BOTTOM

NOTES:

1. PLACE REINFORCING IN THE BOTTOM OF THE FOOTING WITH 3" CLEAR CONCRETE COVER (UNLESS NOTED OTHERWISE). USE ADOBE BLOCKS.
2. TOP REINFORCING, WHERE SPECIFIED, SHALL BE PLACED IN THE TOP OF THE FOOTING WITH 2" MINIMUM CONCRETE COVER.
3. IF FOOTINGS ARE EARTH-FORMED, FOOTING WIDTH AND LENGTH SHALL BE 6" LONGER AND WIDER THAN SCHEDULED. SEE FIGURE BELOW.
4. RUN CONTINUOUS BARS IN CONTINUOUS FOOTINGS THRU INTERSECTED SPOT FOOTINGS. SEE FIGURE BELOW.

*FOOTING TYPES

FC = CONTINUOUS FOOTING
FS = SPOT FOOTING

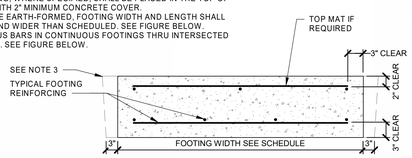

TYPICAL FOOTING SECTION

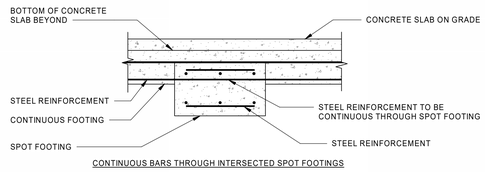

CONTINUOUS BARS THROUGH INTERSECTED SPOT FOOTINGS

SCHEDULE B

CONCRETE FOUNDATION WALL SCHEDULE

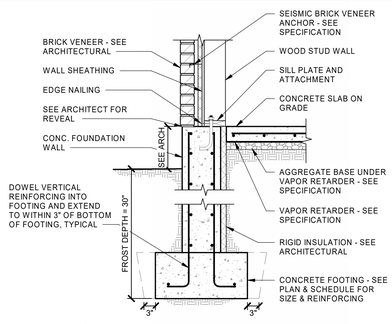

NOTES:
1. IF FOOTINGS ARE EARTH-FORMED, FOOTING WIDTH AND LENGTH SHALL BE 6" LONGER AND WIDER THAN SCHEDULED. SEE FIGURE ABOVE.

MARK	WIDTH	HORIZONTAL REINF.			VERTICAL REINF.	
		TOP	INTERMEDIATE	BOTTOM	SIZE	SPACING
CW-8	8"	(2) #4	#4 AT 16"o.c.	(2) #4	#4	16"o.c.
CW-12	12"	(2) #4	(2) #4 AT 18"o.c.	(2) #4	#4	16"o.c. EF
CW-14	14"	(2) #4	(2) #4 AT 16"o.c.	(2) #4	#4	16"o.c. EF
CW-18	18"	(2) #4	(2) #4 AT 12"o.c.	(2) #4	#4	12"o.c. EF

SCHEDULE C

SPECIAL INSPECTION SCHEDULE [1, 2]

ESTABLISHED PER 2021 IBC SECTION 110 AND CHAPTER 17

ITEM	CONTINUOUS[3]	PERIODIC[3]	REFERENCE	COMMENTS
CONCRETE CONSTRUCTION (IBC 1705.3)			SEE IBC TABLE 1705.3 - REF. NOTE C1	C1. SPECIAL INSPECTION IS NOT REQUIRED FOR CONCRETE ISOLATED SPREAD FOOTINGS, CONTINUOUS FOOTINGS, NON-STRUCTURAL SLABS, FOUNDATION WALLS, PATIOS, DRIVEWAYS, AND SIDEWALKS BECAUSE THE REQUIREMENTS OF IBC 1705.3 ARE MET.
REINFORCING STEEL PLACEMENT		●		
EMBEDDED BOLTS & PLATES	●			C2. PERFORM AIR, SLUMP AND TEMPERATURE TESTS WHEN CONCRETE SAMPLES ARE CAST.
VERIFYING REQUIRED DESIGN MIX		●		C3. EPOXY AND EXPANSION ANCHORS INTO CONCRETE MAY BE USED ONLY WHEN APPROVED BY ARCHITECT. AND/OR ENGINEER USING AN APPROVED PRODUCT WITH CURRENT PUBLISHED ICC RESEARCH REPORT NUMBERS. COORDINATE CONTINUOUS/PERIODIC SPECIAL INSPECTION REQUIREMENTS WITH ICC REPORT.
CONCRETE PLACEMENT / SAMPLING	●		REFERENCE NOTE C2	
CURING TEMPERATURE / TECHNIQUES		●		C4. REFER TO DIVISION 03 OF THE SPECIFICATION FOR ADDITIONAL AND SPECIFIC TESTING AND INSPECTION REQUIREMENTS.
EPOXY / EXPANSION ANCHOR PLACEMENT	●	●	REFERENCE NOTE C3	
MASONRY CONSTRUCTION (IBC 1705.4)			SEE TMS 402/ACI 550 TABLE 1.19.2 (NON-ESSENTIAL)	M1. INSPECTION NOT REQUIRED FOR MECHANICAL SCREEN WALLS. M2. REFER TO DIVISION 04 FOR ADDTIONAL AND SPECIFIC INSPECTION AND TESTING REQUIREMENTS.
WOOD (IBC 1705.5, 1705.11.1 AND 17.05.12.1)				W.1. SPECIAL INSPECTION IS NOT REQUIRED FOR WOOD SHEAR WALLS, WOOD DIAPHRAGMS, INCLUDING NAILING, & BOLTING, AND OTHER FASTENING TO OTHER COMPONENTS WHERE THE SPACING OF THE SHEATHING FASTENERS IS GREATER THAN 4"o.c. WHERE NAIL SPACING IS 4" o.c. OR CLOSER, VERIFY THE NOMINAL SIZE OF FRAMING MEMBERS AT ADJOINING PANEL EDGES, THE NAIL OR STAPLE DIAMETER AND LENGTH, NUMBER OF FASTENER LINES, AND SPACING BETWEEN FASTENERS IN EACH LINE AND AT EDGE MARGINS. ADDITIONALLY, VERIFY SILL PLATE AND ANCHOR BOLTS DIAMETER, SPACING, PLATE WASHER SIZE AND LOCATION. SIMILAR INFORMATION IS TO BE GATHERED FOR OTHER FASTENING COMPONENTS.
SHEAR WALL & DIAPHRAGM NAILING		●	REFERENCE NOTE W1	
DRAG STRUTS		●		
HOLDOWNS		●		
SOILS (IBC 1705.5)			REFERENCE NOTE F1	F1. SPECIAL INSPECTION OF SOILS SHALL REFERENCE THE APPROVED SOILS REPORT TO DETERMINE COMPLIANCE. F2. WHERE SOILS REPORT IS NOT PROVIDED SPECIAL INSPECTIONS ARE REQUIRED TO VERIFY THAT THE IN-PLACE DRY DENSITY OF THE COMPACTED FILL IS NOT LESS THAN 95 PERCENT OF THE MAXIMUM DRY DENSITY AT OPTIMUM MOISTURE CONTENT DETERMINED IN ACCORDANCE WITH ASTM D 1557. F3. REFER TO DIVISION 31 OF SPECIFICATIONS FOR ADDITIONAL AND SPECIFIC TESTING AND INSPECTION REQUIREMENTS. REFER TO DIVISION 6 OF THE SPECIFICATIONS FOR ADDITIONAL AND SPECIFIC TESTING AND INSPECTION REQUIREMENTS.
VERIFY ADEQUATE MATERIALS BELOW FOOTINGS		●	REFERENCE NOTE F1	
EXCAVATIONS EXTEND TO PROPER DEPTH AND REACH PROPER MATERIAL		●	REFERENCE NOTE F2	
CLASSIFY & TEST CONTROLLED FILL MATERIALS		●	REFERENCE NOTE F2	
PERFORM MATERIALS, DENSITIES, AND LIFT THICKNESSES DURING PLACEMENT AND COMPACTION OF CONTROLLED FILL	●		REFERENCE NOTE F1	
PROPERLY PREPARED SITE AND SUB-GRADE PRIOR TO FILL.		●	REFERENCE NOTE F1	
FABRICATORS (IBC 1704.2.5)				
	●			IF FABRICATOR IS APPROVED, ON-SITE INSPECTION IS NOT REQUIRED BUT A CERTIFICATE OF COMPLETION MUST BE PROVIDED TO THE BUILDING OFFICIAL (IBC 1704.2.5)
PREFABRICATED METAL PLATE WOOD TRUSSES:				
THE INSPECTOR SHALL VERIFY THAT THE FABRICATOR MAINTAINS DETAILED FABRICATION AND QUALITY CONTROL PROCEDURES THAT PROVIDE A BASIS OF INSPECTION CONTROL OF THE WORKMANSHIP AND THE FABRICATOR'S ABILITY TO CONFORM TO APPROVED CONSTRUCTION DOCUMENTS AND REFERENCED STANDARDS.		●		
REFER TO SPECIFICATIONS FOR REQUIRED "TRUSS PLANT CERTIFICATION FORM" AND FOR INSPECTION OF PREFABRICATED WOOD TRUSSES LONGER THAN 60'-0" LONG		●		

GENERAL SPECIAL INSPECTION NOTES :

1. THE ITEMS MARKED WITH A "●" IN THE SPECIAL INSPECTION SCHEDULE SHALL BE INSPECTED IN ACCORDANCE WITH IBC CHAPTER 17 BY A CERTIFIED SPECIAL INSPECTOR FROM AN ESTABLISHED TESTING AGENCY. FOR MATERIAL SAMPLING AND TESTING REQUIREMENTS, REFER TO THE MATERIAL SAMPLING AND TESTING SECTION, AND THE PROJECT SPECIFICATIONS. THE TESTING AGENCY SHALL SEND COPIES OF ALL STRUCTURAL TESTING AND INSPECTION REPORTS DIRECTLY TO THE ARCHITECT, ENGINEER, CONTRACTOR, AND BUILDING OFFICIAL. ANY ITEMS WHICH FAIL TO COMPLY WITH THE APPROVED CONSTRUCTION DOCUMENTS SHALL IMMEDIATELY BE BROUGHT TO THE ATTENTION OF THE CONTRACTOR FOR CORRECTION. IF DISCREPANCIES ARE NOT CORRECTED, THEY SHALL BE BROUGHT TO THE ATTENTION OF THE BUILDING OFFICIAL, ARCHITECT, AND ENGINEER PRIOR TO COMPLETION OF THAT PHASE OF WORK. SPECIAL INSPECTION TESTING REQUIREMENTS APPLY EQUALLY TO ALL BIDDER DESIGNED COMPONENTS.
2. ANY CONSTRUCTION OR MATERIAL THAT HAS FAILED INSPECTION SHALL BE SUBJECT TO REMOVAL AND REPLACEMENT.
3. CONTINUOUS SPECIAL INSPECTION MEANS THE FULL-TIME OBSERVATION OF WORK REQUIRING SPECIAL INSPECTION BY AN APPROVED SPECIAL INSPECTOR WHO IS PRESENT IN THE AREA WHERE THE WORK IS BEING PERFORMED. PERIODIC SPECIAL INSPECTION MEANS THE PART-TIME OR INTERMITTENT OBSERVATION OF WORK REQUIRING SPECIAL INSPECTION BY AN APPROVED SPECIAL INSPECTOR WHO IS PRESENT IN THE AREA WHERE THE WORK HAS BEEN OR IS BEING PERFORMED AND AT THE COMPLETION OF THE WORK. (IBC SECTION 202)

STATEMENT OF SPECIAL INSPECTION

1. SPECIAL INSPECTIONS AND STRUCTURAL TESTING SHALL BE PROVIDED BY AN INDEPENDENT AGENCY EMPLOYED BY THE OWNER FOR THE ITEMS IDENTIFIED IN THIS SECTION AND IN OTHER AREAS OF THE APPROVED CONSTRUCTION PLANS AND SPECIFICATIONS, UNLESS WAIVED BY THE BUILDING OFFICIAL (SEE IBC CHAPTER 17).
2. THE NAMES AND CREDENTIALS OF THE SPECIAL INSPECTORS TO BE USED SHALL BE SUBMITTED TO THE BUILDING OFFICIAL FOR APPROVAL.
3. DUTIES OF THE SPECIAL INSPECTOR:
   a. THE SPECIAL INSPECTOR SHALL REVIEW ALL WORK LISTED ABOVE FOR CONFORMANCE WITH THE APPROVED CONSTRUCTION PLANS AND SPECIFICATIONS AND THE IBC.
   b. THE SPECIAL INSPECTOR SHALL FURNISH SPECIAL INSPECTION REPORTS TO THE ENGINEER OF RECORD, CONTRACTOR, OWNER AND BUILDING OFFICIAL ON A WEEKLY BASIS, OR MORE FREQUENTLY AS REQUIRED BY THE BUILDING OFFICIAL. ALL ITEMS NOT IN COMPLIANCE SHALL BE BROUGHT TO THE IMMEDIATE ATTENTION OF THE CONTRACTOR FOR CORRECTION, AND IF UNCORRECTED, TO THE ENGINEER OF RECORD AND THE BUILDING OFFICIAL.
   c. ONCE CORRECTIONS HAVE BEEN MADE BY THE CONTRACTOR, THE SPECIAL INSPECTOR SHALL SUBMIT A FINAL SIGNED REPORT TO THE BUILDING OFFICIAL STATING THAT THE WORK REQUIRING SPECIAL INSPECTION WAS, TO THE BEST OF THE SPECIAL INSPECTOR'S KNOWLEDGE, IN CONFORMANCE WITH THE APPROVED CONSTRUCTION PLANS AND SPECIFICATIONS AS WELL AS THE APPLICABLE WORKMANSHIP PROVISIONS OF THE IBC.
4. DUTIES AND RESPONSIBILITIES OF THE CONTRACTOR:
   a. THE CONTRACTOR SHALL SUBMIT A WRITTEN STATEMENT OF RESPONSIBILITY TO THE OWNER AND THE BUILDING OFFICIAL PRIOR TO THE COMMENCEMENT OF WORK. IN ACCORDANCE WITH IBC 1704.4, THE STATEMENT OF RESPONSIBILITY SHALL CONTAIN ACKNOWLEDGEMENT OF THE SPECIAL INSPECTION REQUIREMENTS CONTAINED WITHIN THE "STATEMENT OF SPECIAL INSPECTIONS".
   b. THE CONTRACTOR SHALL NOTIFY THE RESPONSIBLE SPECIAL INSPECTOR THAT WORK IS READY FOR INSPECTION AT LEAST ONE WORKING DAY (24 HOURS MINIMUM) BEFORE SUCH INSPECTION IS REQUIRED.
   c. ALL WORK REQUIRING SPECIAL INSPECTION SHALL REMAIN ACCESSIBLE AND EXPOSED UNTIL IT HAS BEEN OBSERVED BY THE SPECIAL INSPECTOR.
5. PLEASE SEE THE "SPECIAL INSPECTION SCHEDULE" FOR THE TYPES, EXTENTS AND FREQUENCY OF SPECIFIC ITEMS REQUIRING SPECIAL INSPECTIONS AND STRUCTURAL TESTS AS PART OF THIS PROJECT.

SCHEDULE D

LAP SPLICE SCHEDULE

BAR SIZE	BAR OVERLAP	BAR SIZE	BAR OVERLAP	BAR SIZE	BAR OVERLAP
#3	18"	#4	24"	#5	30"
#6	36"	#7	42"	#8	48"

SCHEDULE E

CONCRETE PROTECTION FOR REINFORCEMENT

CONCRETE PLACED AGAINST AND PERMANENTLY EXPOSED TO EARTH	ALL APPLICATIONS EXCEPT SLABS ON GRADE	3"
	SLABS ON GRADE - CLEAR DISTANCE FROM TOP OF SLAB	1"
CONCRETE EXPOSED TO EARTH OR WEATHER	#6 BARS AND LARGER	2"
	#5 BARS AND SMALLER	1 1/2"
NOTES	TOLERANCE FOR CONCRETE COVER AND REINFORCEMENT LOCATION IS ±3/8"	

SCHEDULE F

STEEL ANGLE LINTEL SCHEDULE FOR VENEER

CLEAR OPENING	SIZE OF ANGLE
UP TO 7'-0"	4" x 4" x 3/8"
7'-1" TO 9'-0"	6" x 4" x 5/16"
9'-1" TO 10'-0"	6" x 4" x 5/16"
10'-1" TO 11'-0"	6 x 4" x 3/8"
11'-1" TO 12'-0"	6" x 4" x 7/16"
12'-1" TO 13'-0"	8" x 4" x 7/16"
13'-1" AND OVER	REQUIRES SPECIAL ANALYSIS, CONTACT ENGINEER

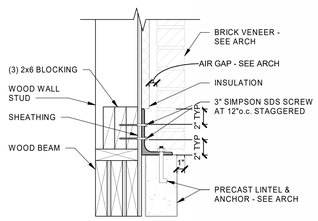

NOTES:
1. LINTELS CARRY BRICK VENEER OR STONE ONLY.
2. WHERE FLOORS, ROOFS, OR CONCENTRATED LOADS OCCUR ABOVE, FURTHER ANALYSIS IS NECESSARY. CONTACT ARCHITECT AND ENGINEER.
3. ANGLES ARE TO BE HOT DIPPED GALVANIZED AND "PAINTED".
4. ANGLE ARE TO BE ORIENTED WITH 4" LEG HORIZONTAL.
5. ANCHOR ANGLES TO BEAMS, HEADERS, TOP-PLATES, ETCETERA WITH (2) 3" SDS SCREW AT 12"o.c., STAGGERED.
6. AT LOCATIONS WHERE ANGLE IS USED FOR BRICK VENEER OR STONE AT STUD WALL, USE 3x12 BLOCKING BEHIND ANGLE LOCATION.
7. AT LOCATIONS WHERE ANGLE EXTENDS BEYOND OPENING AND BEARS ON BRICK PROVIDE 1" OF BEARING EACH END FOR EACH FOOT OF SPAN. MINIMUM BEARING OF 6" EACH SIDE OF OPENING.

bhd ARCHITECTS
www.bhdarchitects.com
Phone 801.571.0010
Fax 801.571.0303
Toll Free 888.571.0010
65 East Wadsworth Park Drive
Suite 205 Draper, Utah 84020

PROFESSIONAL ENGINEER — Matthew C. McBride — No. 353893 — 8/14/24 — STATE OF UTAH

THE CHURCH OF JESUS CHRIST OF LATTER-DAY SAINTS

Orem YSA 3rd 10 Ward Building
Orem UT YSA 3rd Stake

Approx. 1700 West 575 South
Vineyard, Utah 84059

BHD #: 2344 | County Parcel: 24-228-0001 | Plan Series: 2024 10 Ward SC | Owner #: 590-1876
Date: 15 Aug 2024

Drawing Issue and Revision Schedule

1	15 Aug 2024 Bid Documents

SCHEDULES

S602

C:\Users\jacksonp\Documents\S-23738-Orem YSA Custom-2025_jacksonpQEMB2.rvt
Printed 8/19/2024 5:08:30 PM

SCHEDULE A

STRUCTURAL WOOD WALL SCHEDULE

MARK	NOMINAL STUD SIZE[11,13,22]	STUD SPACING	SILL PLATE[4,5]	TOP PLATES[19]	WOOD SHEATHING THICKNESS[12,14,15,16,17,18, 23]	COMMENT	EDGE NAILING[5,6,7,8]	SILL PLATE ATTACHMENT[1,2]
W4-A	2x4	16"	2x4	(2) 2x4	---		---	POWDER ACTUATED FASTENER AT 24" ON CENTER[3]
W4-B	2x4	16"	2x4	(2) 2x4	2x WOOD BRACING		---	SEE DETAIL 9/S522
W6-A	2x6	16"	2x6	(2) 2x6	---		---	POWDER ACTUATED FASTENER AT 24" ON CENTER
W6-B[9,11]	2x6	16"	2x6[11]	(2) 2x6	15/32"		6"	5/8" DIAMETER x 8" EMBEDMENT ANCHOR AT 32" ON CENTER
W6-C[9,11]	2x6	16"	2x6	(2) 2x6	15/32"		2"	5/8" DIAMETER x 8" EMBEDMENT ANCHOR AT 24" ON CENTER
W8-A	1 3/4" x 7 1/4" LVL	16"	1 1/2"x7 1/4" SCL	(2) 1 1/2"x7 1/4" SCL	---		---	POWDER ACTUATED FASTENERS AT 24" ON CENTER
W8-B	1 3/4" x 7 1/4" LVL	16"	1 1/2"x7 1/4" SCL	(2) 1 1/2"x7 1/4" SCL	15/32"		3"	5/8" DIAMETER x 8" EMBEDMENT ANCHOR AT 24" ON CENTER
W10-A[11]	1 3/4" x 9 1/2" LVL	16"	1 1/2"x9 1/2" SCL	(2) 1 1/2"x9 1/2" SCL	15/32"		4"	5/8" DIAMETER x 8" EMBEDMENT ANCHOR AT 24" ON CENTER
W10-B	1 3/4" x 9 1/2" LVL	16"	1 1/2"x9 1/2" SCL	(2) 1 1/2"x9 1/2" SCL	15/32"		3"	5/8" DIAMETER x 8" EMBEDMENT ANCHOR AT 24" ON CENTER
W12-A	1 3/4" x 11 7/8" LVL	12"	1 1/2"x11 7/8" SCL	(2) 1 1/2"x11 7/8" SCL	15/32"		4"	5/8" DIAMETER x 8" EMBEDMENT ANCHOR AT 16" ON CENTER
W12-B	(2) 1 3/4" x 11 7/8" LVL[21]	16"	1 1/2"x11 7/8" SCL	(2) 1 1/2"x11 7/8" SCL	15/32"		4"	5/8" DIAMETER x 8" EMBEDMENT ANCHOR AT 16" ON CENTER
W12-C	1 3/4" x 11 7/8" LVL	16"	1 1/2"x11 7/8" SCL	(2) 1 1/2"x11 7/8" SCL	---		---	POWDER ACTUATED FASTENER AT 24" ON CENTER[3]

NOTES:
1. ALL ANCHOR BOLTS AT SILL PLATE ATTACHMENT SHALL HAVE A 1/4" x 3" x 3" MINIMUM WASHER BETWEEN THE SILL PLATE AND THE ANCHOR NUT. SEE ANCHOR BOLT PLATE WASHER DETAIL ON THIS SCHEDULE.
2. 5/8" DIAMETER SILL PLATE ANCHOR BOLTS MAY BE REPLACED WITH POST-INSTALLED ADHESIVE ANCHORS, POST-INSTALLED DRILLED-IN MECHANICAL ANCHORS (EXPANSION BOLTS) OR POST-INSTALLED SCREW ANCHORS. REFER TO SPECIFICATION SECTION 03 1511 FOR ACCEPTABLE PRODUCTS. POST-INSTALLED ANCHORS SHALL BE INSTALLED AS DEEP AS HAD BEEN REQUIRED FOR CAST-IN-PLACE SILL PLATE ANCHOR BOLTS. POWDER ACTUATED FASTENERS ARE NOT ALLOWED FOR SHEAR WALL SILL PLATE ATTACHMENT.
3. POWDER ACTUATED FASTENERS TO BE HILTI 'X-U P8' WITH MINIMUM EMBEDMENT OF 1-1/4" OR EQUIVALENT.
4. ALL WOOD IN CONTACT WITH CONCRETE SHALL BE PRESSURE TREATED.
5. FASTENERS FOR PRESERVATIVE AND TREATED WOOD SHALL BE HOT DIPPED ZINC COATED GALVANIZED STEEL, STAINLESS STEEL, SILICONE BRONZE, OR COPPER, UNLESS WOOD IS BORATE TREATED.
   a. EXCEPTION: PLAIN CARBON STEEL FASTENERS, INCLUDING NUTS AND WASHERS, IN SBX/DOT AND ZINC BORATE PRESERVATIVE-TREATED WOOD IN ANY INTERIOR, DRY ENVIRONMENT IS PERMITTED.
6. ALL NAILS TO BE HEAD MARKED FOR EASY IDENTIFICATION AFTER INSTALLATION.
7. ALL NAILS ATTACHING WOOD SHEATHING TO WALLS TO BE 10d (3" X 0.148" DIAMETER).
8. FIELD NAIL SPACING TO BE 6" ON CENTER.
9. SPECIAL INSPECTION IS REQUIRED.
10. NOT USED.
11. WHERE NAIL SPACING IS 4" OR LESS, MEMBERS AT ADJOINING PANEL EDGES SHALL NOT BE LESS THAN 3" NOMINAL. JOINT AND SILL NAILING SHALL BE STAGGERED.
    a. AS AN ALTERNATE TO USING A 3x NOMINAL STUD OR SILL PLATE, USE (2) 2x MEMBERS SPIKED TOGETHER WITH 16d NAILS AT 3" ON CENTER, STAGGERED.
       1. AT WALLS REQUIRING 3x SILL PLATES, IT IS PERMISSIBLE TO USE A TREATED 2x MEMBER IN CONTACT WITH THE CONCRETE AND AN UNTREATED 2x MEMBER ON TOP.
    b. WHERE WOOD SHEATHING IS APPLIED ON BOTH FACES OF A WALL AND NAIL SPACING IS LESS THAN 6" ON CENTER ON EITHER SIDE, WOOD SHEATHING JOINTS SHALL BE OFFSET TO FALL ON DIFFERENT STUDS. ALTERNATIVELY, THE WIDTH OF THE NAILED FACE OF STUDS SHALL BE 3" NOMINAL OR GREATER AT ADJOINING WOOD SHEATHING EDGES AND NAILS AT ALL WOOD SHEATHING EDGES SHALL BE STAGGERED.
12. AT EXTERIOR WALLS, COORDINATE WITH ARCHITECTURAL DETAILS WHERE SHEATHING IS REQUIRED TO EXTEND HIGHER THAN TOP PLATES FOR OTHER EXTERIOR FINISHES.
13. FOR LUMBER WALLS TALLER THAN 15'-0", CHANGE LUMBER MATERIAL TO SCL MATERIAL IF NOT ALREADY SCHEDULED AS SUCH.
14. WALL SHEATHING MAY BE INSTALLED WITH THE LONG DIRECTION HORIZONTAL OR VERTICAL.
15. SHEATHING MAY BE INSTALLED IN STACKED INSTEAD OF RUNNING PATTERN AT CONTRACTOR'S OPTION.
16. ALL SHEATHING SHALL HAVE A SPAN RATING OF 24/16 OR BETTER UNLESS OTHERWISE NOTED.
17. ALL WALL SHEATHING SHALL COMPLY WITH PS1-95 OR PS2-92
18. SOLID BLOCK ALL WOOD WALL SHEATHING PANEL JOINTS, SEE BLOCKING DETAIL THIS SCHEDULE.
19. SEE 1/S521 FOR TOP PLATE SPLICE DETAIL.
20. FOR INTERIOR WALLS LOCATE ANCHOR BOLTS IN CENTER OF WALL. AT EXTERIOR WALLS LOCATE ANCHOR BOLTS FOLLOWING THE PROVIDED SCHEDULE BELOW. AT DOUBLE SIDED WALL, REFER TO ANCHOR BOLT PLATE WASHER DETAIL FOR MORE INFORMATION.
21. ATTACH TWO WALL STUDS TOGETHER AS SHOWN BELOW IN BLOCKING DETAIL
22. ALL SCL LUMBER IN FIRE-RATED EXTERIOR WALLS TO BE PAINTED WITH INTUMESCENT PAINT PER ARCHITECTURAL DRAWINGS.
23. INCREASE SHEATHING THICKNESS IN EXTERIOR FIRE RATED WALLS PER MANUFACTURER REQUIREMENTS, i.e. INCREASE 15/32" SHEATHING TO 19/32" SHEATHING FOR COATINGS ON BOTH SIDES OF SHEATHING FOR 2 HOUR WALL FOR FIRE RATING REQUIREMENTS. AT FIRE RATED WALLS, USE GALVANIZED NAILS PER MANUFACTURER REQUIREMENTS.

NOMINAL STUD WALL	DISTANCE FROM INSIDE FACE OF FOUNDATION WALL TO CENTER OF BOLT
2x6	3"
2x8	4"
2x10	6 1/2"
2x12	9"

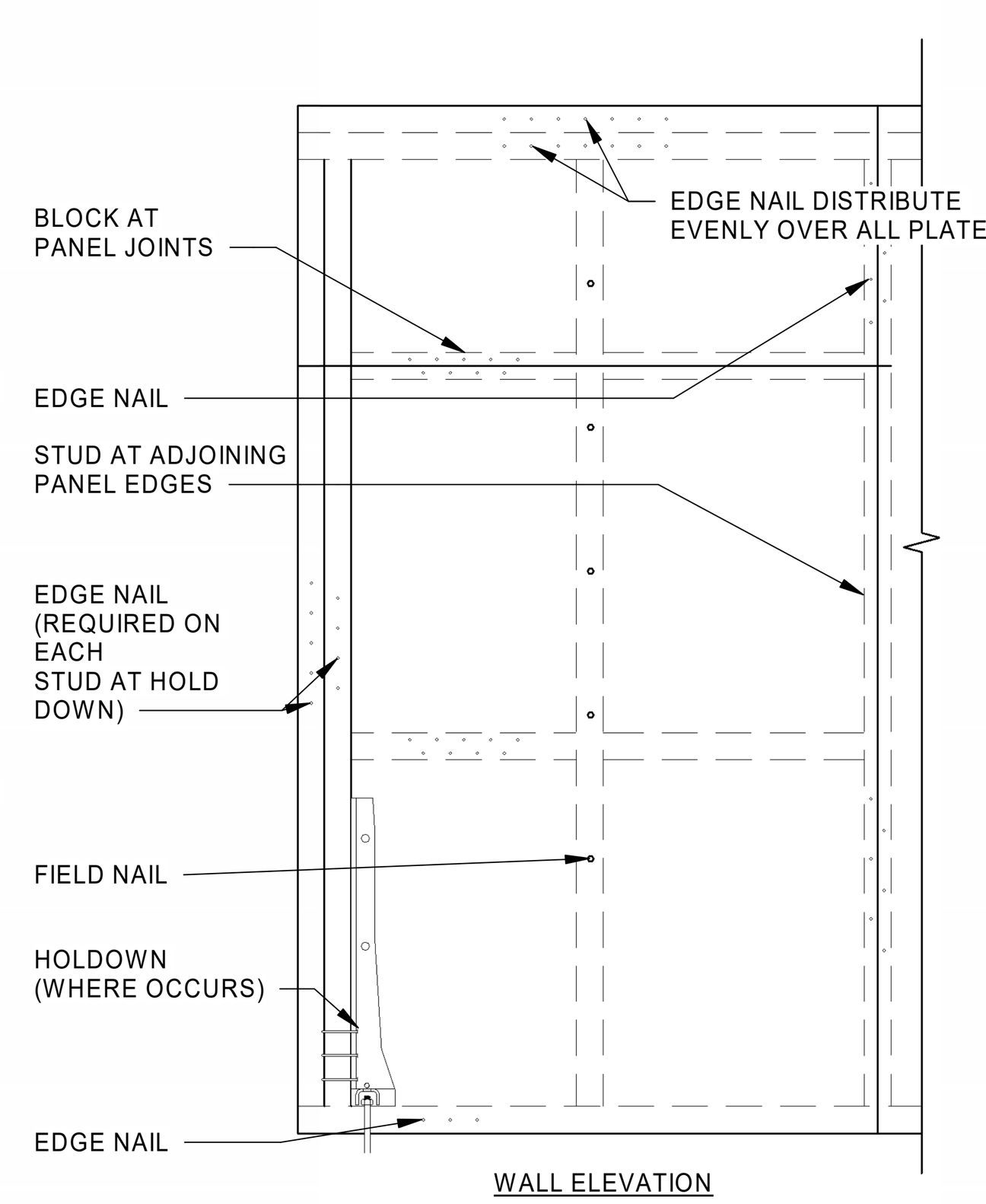

WALL ELEVATION

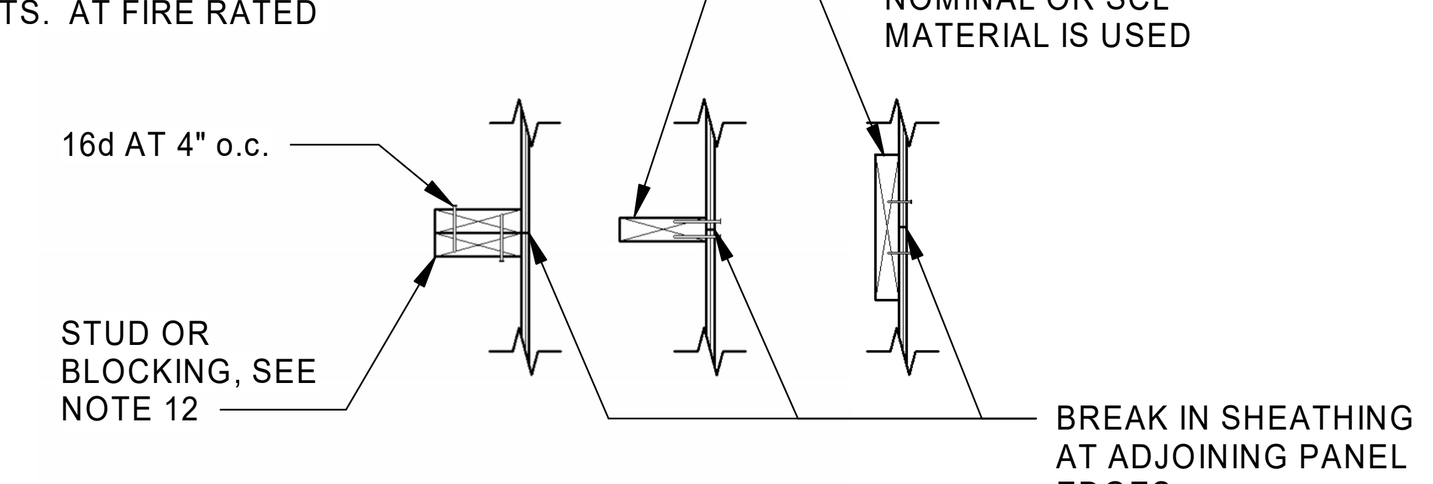

BLOCKING DETAIL

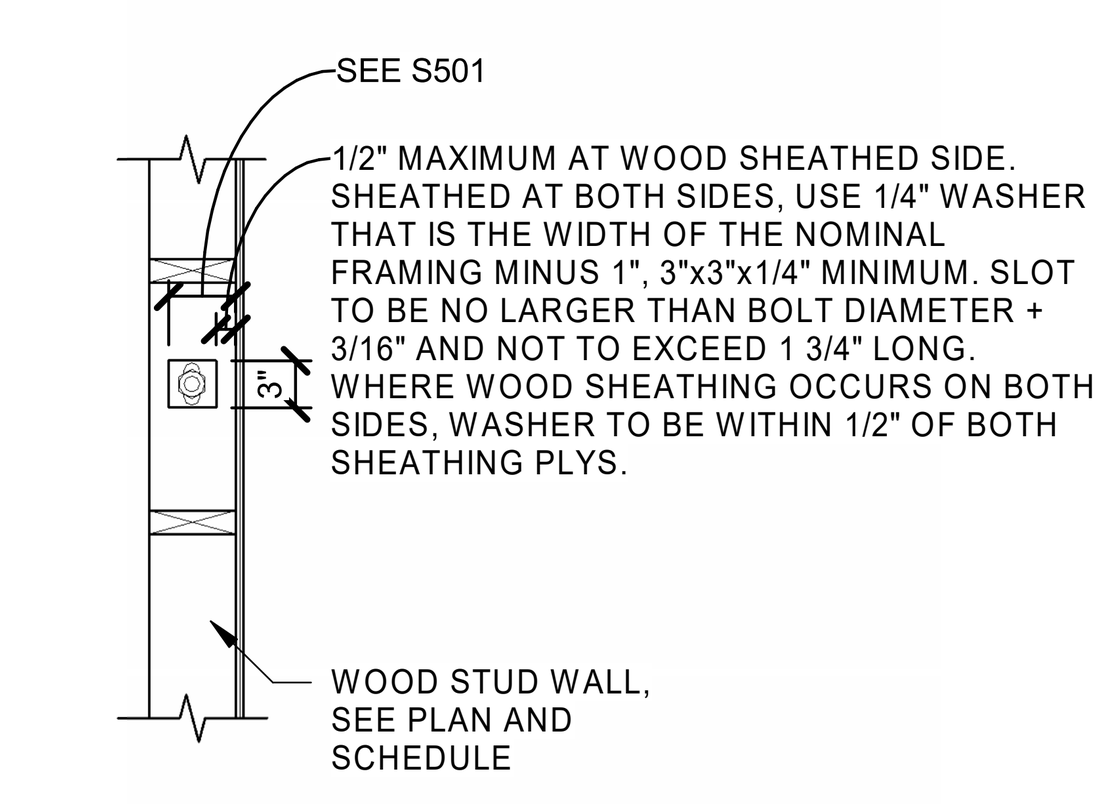

ANCHOR BOLT PLATE WASHER DETAIL

SCHEDULE B

WOOD BEAM SCHEDULE

MARK	SIZE[2,3]	MATERIAL	JAMB[1,4,7]		COMMENTS
			BEARING STUDS[5]	KING STUDS[6]	
BM-1	(3) 2x6	DF-L #2	(1)	(1)	TYPICAL EXTERIOR WINDOW AND DOOR HEADER
BM-1A	(4) 2x6	DF-L #2	(1)	(1)	EXTERIOR HEADER AT 8" WALL
BM-2	(3) 2x6	DF-L #2	(1)	(1)	TYPICAL INTERIOR DOOR HEADER AT 6" OR LARGER WALL
BM-2A	(2) 2x6	DF-L #2	(1)	(1)	TYPICAL INTERIOR DOOR HEADER AT 4" WALL
BM-3	(3) 2x10	DF-L #2	(1)	(1)	HALLWAY HEADER AT PLATFORM
BM-4	(3) 1 3/4" x 14"	SCL	(3)	(3)	FOYER BEAM SUPPORT AT PLATFORM
BM-5	(3) 1 3/4" x 11 1/4"	SCL	(2)	(1)	LARGE HEADER IN CULTURAL HALL
BM-6	(3) 1 3/4" x 11 1/4"	SCL	(1)	(1)	REAR HALLWAY HEADER AT PLATFORM
BM-7	(3) 2x12	DF-L #2	(2)	(3)	EXTERIOR REAR ENTRANCE HEADER
BM-8	(3) 2x12	DF-L #2	(2)	(1)	INTERIOR REAR ENTRANCE HEADER
BM-9	(3) 1 3/4" x 14"	SCL	(3)[8]	(--)	BEAM AT HIP GIRDER
BM-10	(3) 1 3/4" x 14"	SCL	(2)	(--)	EXTERIOR BEAM AT GRID A.3
BM-11	(4) 1 3/4" x 9 1/2"	SCL	(2)	(--)	TYPICAL PARTITION DOOR BEAM
BM-12	(2) 1 3/4" x 14"	SCL	(2)	(--)	FOYER ENTRANCE HEADER
BM-13	(2) 1 3/4" x 11 1/4"	SCL	(2)	(1)	BEAM NEAR PLATFORM ENTRANCE
BM-14	(3) 2x8	DF-L #2	(2)	(2)	FRONT SIDE ENTRY
BM-15	(6) 1-3/4" x 9-1/2"	SCL	(2)	(2)	CHAPEL SIDE WINDOW, GRID E & C
BM-16	(3) 2x10	DF-L #2	(1)	(1)	BEAM AT PLATFORM TURN, GRID E & C
BM-17	(3) 2x12	DF-L #2	(2)	(--)	CENTRAL PLATFORM BEAM OVER BATHROOM, NEAR GRID 4
BM-18	(2) 1-3/4" x 14"	SCL	(2)	(1)	SIDE OF FOYER BEAMS, GRIDS A.6 & G
BM-19	(2) 1-3/4" x 14"	SCL	(2)	(1)	ROOF BEAM AT FOYER
BM-20	(3) 1 3/4" x 11 1/4"	SCL	(2)	(1)	BEAM AT EQUIP. PLATFORM ENTRANCE

NOTES:
1. SEE STRUCTURAL WOOD WALL SCHEDULE FOR JAMB MATERIAL AND NOMINAL SIZE.
2. USE FILLERS AS NEEDED TO HAVE ALL BEAMS OR HEADERS MATCH WIDTH OF WALL IN WHICH BEAM IS LOCATED.
3. BEAMS OF MULTIPLE MEMBERS MAY BE REPLACED WITH A SINGLE MEMBER OF EQUIVALENT SIZE AND MATERIAL PROPERTIES.
4. SEE NAILING PATTERN SHOWN IN WOOD JAMB FASTENING FOR MULTIPLE-PLY BEARING AND KING STUDS.
5. USE 16d NAILS TO BUILD UP 2 OR 3 STUD COLUMNS.
   - ADJACENT NAILS ARE TO BE DRIVEN FROM OPPOSING SIDES OF COLUMN.
   - 3 1/2" WIDE COLUMNS REQUIRE ONE ROW OF STAGGERED NAILS. ALL OTHER COLUMNS REQUIRE TWO ROWS OF NAILS.
6. KING STUDS EXTEND FROM TOP OF SILL PLATE TO BOTTOM OF TOP WALL PLATES.
7. BEARING STUDS EXTEND FROM TOP OF SILL PLATE TO BOTTOM OF BEAM OR HEADER.
8. BEARING STUDS TO BE PLACED DIRECTLY BENEATH GIRDER TRUSS BEARING LOCATION.

WOOD BEAM FASTENING AND ATTACHMENT

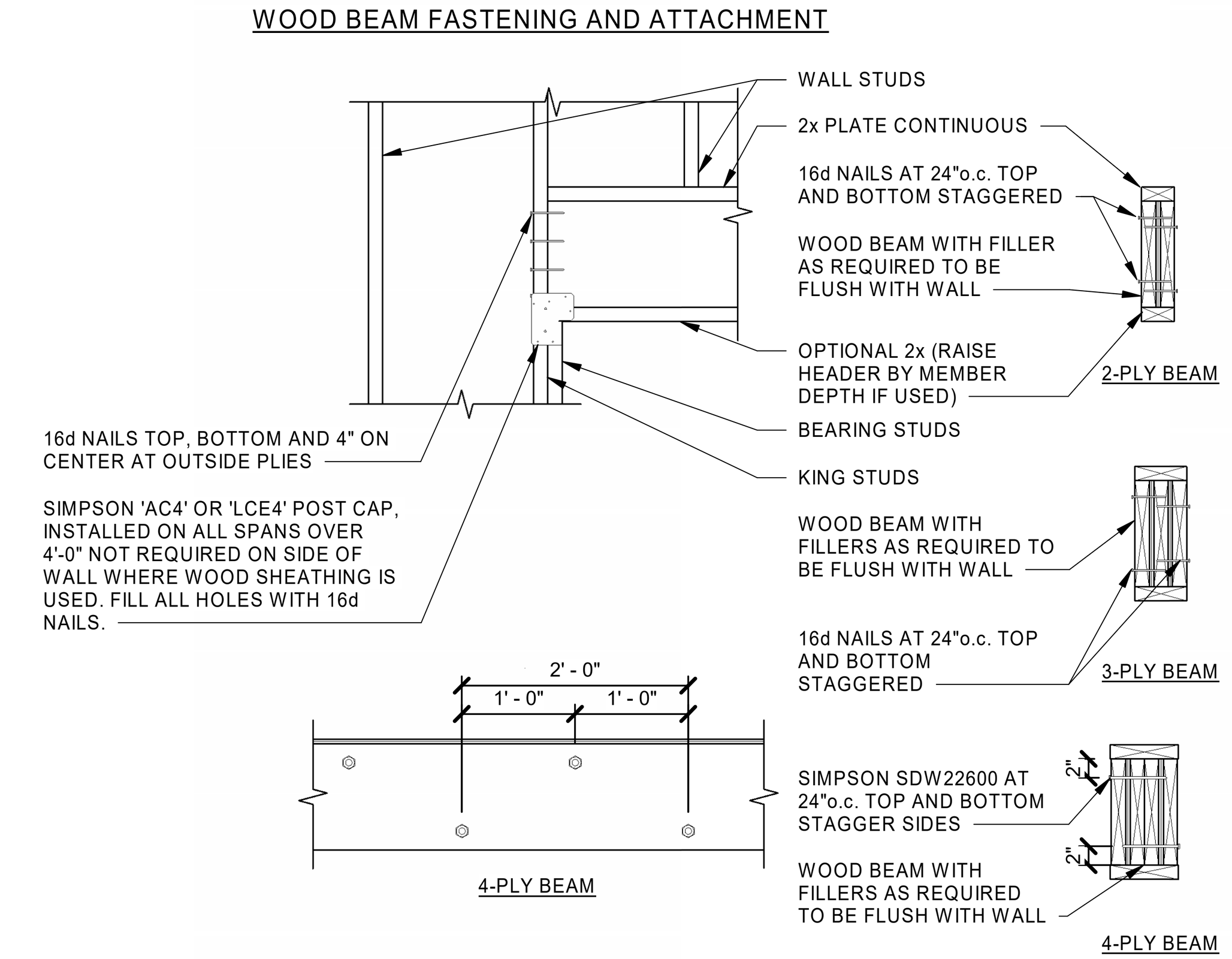

WOOD JAMB FASTENING

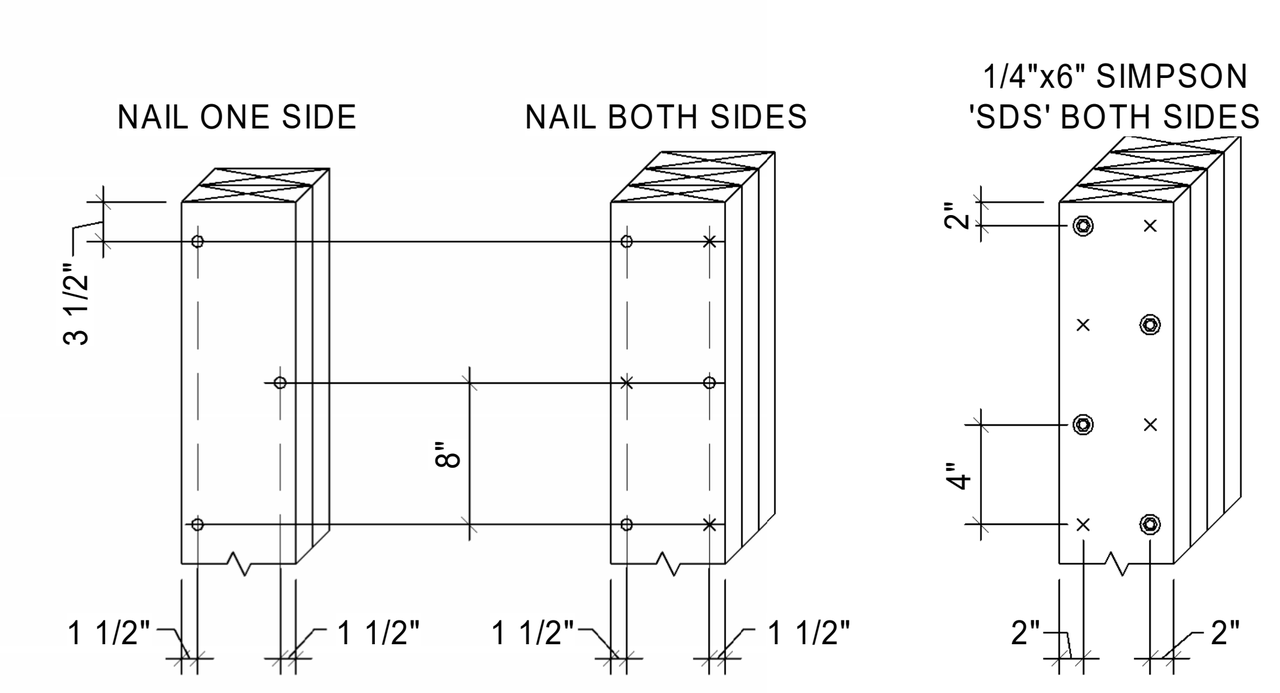

LEGEND
° NAIL OR SCREW FROM THIS SIDE
× NAIL OR SCREW FROM OPPOSITE SIDE

bhd ARCHITECTS
www.bhdarchitects.com
Phone 801.571.0010
Fax 801.571.0303
Toll Free 888.571.0010
65 East Wadsworth Park Drive
Suite 205 Draper, Utah 84020

PROFESSIONAL STRUCTURAL ENGINEER Matthew C. McBride No. 353893 8/14/24 STATE OF UTAH

THE CHURCH OF JESUS CHRIST OF LATTER-DAY SAINTS

Orem YSA 3rd 10 Ward Building
Orem UT YSA 3rd Stake
Approx. 1700 West 575 South
Vineyard, Utah 84059

Date: 15 Aug 2024 | BHD #: 2344 | County Parcel: 39:228:0001 | Plan Series: 2024 10 Ward SC | Owner #: 590-1876

Drawing Issue and Revision Schedule

#	Date	Description
	15 Aug 2024	Bid Documents

SCHEDULES

S603

C:\Users\jacksonp\Documents\S-23738-Orem YSA Custom-2025_jacksonpQEMB2.rvt
Printed 8/19/2024 5:08:32 PM

SCHEDULE A

REQUIRED NAIL TYPES

ALL NAILS NOTED ON THE DRAWINGS SHALL BE AS SHOWN BELOW, UNLESS NOTED OTHERWISE.

NAIL SIZE	STANDARD LENGTH (INCHES)	DIAMETER (INCHES)	MINIMUM PENETRATION REQUIRED INTO MAIN MEMBER (INCHES)
8d	2 1/2	.131	1 3/8
10d	3	.148	1 1/2
16d	3 1/4	.148	1 1/2

NOTES:
1. EXCEPT WHERE NOTED OTHERWISE, THE NUMBER AND SIZE OF NAILS CONNECTING WOOD MEMBERS SHALL NOT BE LESS THAN THAT SET FORT IN IBC TABLE 2304.9.1
   a. CONNECTION FOR MULTIPLE PIECES OF ENGINEERED LUMBER SHALL BE IN ACCORDANCE WITH MANUFACTURER SPECIFICATIONS.
   b. WHERE 16d COMMON NAILS ARE CALLED OUT IN IBC TABLE 2304.9.1 USE 16d BOX NAILS.
2. ALL NAILS NOTED ON THE DRAWINGS SHALL BE AS SHOWN UNLESS NOTED OTHERWISE; NAILS FOR 3RD PARTY HARDWARE SHALL BE AS REQUIRED BY MANUFACTURER OF HARDWARE.
3. ALL FASTENERS FOR PRESERVATIVE AND FIRE RETARDANT TREATED WOOD SHALL BE HOT DIPPED ZINC COATED GALVANIZED STEEL, STAINLESS STEEL, SILICONE BRONZE, OR COPPER, UNLESS WOOD IS BORATE TREATED. EXCEPTION: PLAIN CARBON STEEL FASTENERS, INCLUDING NUTS AND WASHERS, IN SBX/DOT AND ZINC BORATE PRESERVATIVE-TREATED WOOD IN AN INTERIOR, DRY ENVIRONMENT ARE PERMITTED.
4. NAILS USED IN SIMPSON HARDWARE (OR HARDWARE OF EQUAL VALUE) SHALL BE AS SPECIFIED BY THE MANUFACTURER.
5. OTHER FASTENERS MAY BE USED TO REPLACE NAILS BUT THEY MUST HAVE EQUIVALENT, OR LARGER, DIAMETERS AND PENETRATION LENGTHS.

SCHEDULE B

DEFERRED SUBMITTALS

FOR THE PURPOSE OF THIS SECTION, DEFERRED SUBMITTALS ARE DEFINED PER THE IBC. SUBMITTAL DOCUMENTS FOR DEFERRED SUBMITTAL ITEMS SHALL BE SUBMITTED TO THE ENGINEER, ARCHITECT, AND BUILDING OFFICIAL FOR THEIR REVIEW FOR GENERAL CONFORMANCE WITH THE DESIGN OF THE BUILDING. DEFERRED STRUCTURAL SUBMITTALS FOR THIS PROJECT ARE:
1. PREFABRICATED METAL PLATE WOOD TRUSSES
2. STEEPLE FRAMING

SCHEDULE C

WIND COMPONENTS AND CLADDING

WIND ZONE	COMPONENTS AND CLADDING NEGATIVE PRESSURE (PSF) EFFECTIVE WIND AREA (SQ FT.)				
	10 sq ft.	20 sq ft.	50 sq ft.	100 sq ft.	500 sq ft.
1, 2e	36.7	36.7	31.5	27.6	21.4
2n, 2r, & 3e	58.5	51.2	41.6	34.4	30.1
3r	68.3	57.5	43.2	43.2	43.2
4	27.9	26.8	25.2	24.1	21.4
5	34.5	32.2	29.1	26.8	21.4

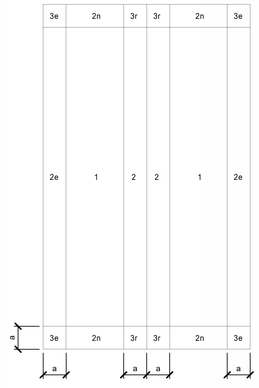

SCHEDULE D

FRAMING NAILING REQUIREMENTS SCHEDULE

(REFER TO 2021 IBC TABLE 2304.10.2)

CONNECTION AND LOCATION	NAILING	CONNECTION AND LOCATION	NAILING
JOIST TO SILL OR GIRDER (TOENAIL)	3- 8d COMMON (2 1/12" x 0.131") 3- 3" x 0.131" NAILS	DOUBLE STUDS (FACE NAIL)	16d (3 1/2"x0.135") AT 24"o.c. 3"x0.131" NAILS AT 8"o.c.
BRIDGING TO JOIST (TOENAIL EACH END)	2- 8d COMMON (2 1/2" x 0.131") 2- 3" x 0.131" NAILS	DOUBLE TOP PLATES (TYPICAL FACE NAIL)	16d (3 1/2"x0.135") AT 16"o.c. 3"x0.131" NAILS AT 12"o.c.
1"x6" SUBFLOOR OR LESS TO EACH JOIST (FACE NAIL)	2- 8d COMMON (2 1/2" x 0.131")	DOUBLE TOP PLATES (LAP SPLICE)	8- 16d COMMON (3 1/2"x0.162") 12- 3"x0.131" NAILS
WIDER THAN 1"x6" SUBLOOR TO EACH JOIST (FACE NAIL)	2- 8d COMMON (2 1/2" x 0.131")	BLOCKING BETWEEN JOISTS OR RAFTERS TO TOP PLATE (TOENAIL)	3- 8d COMMON (2 1/2"x0.131") 3- 3"x0.131" NAILS
2" SUBFLOOR TO JOIST OR GIRDER (BLIND AND FACE NAIL)	2- 16d COMMON (3 1/2" x 0.162")	RIM TO TOP PLATE (TOENAIL)	8d (2 1/2"x0.131") 3"x0.131" NAILS AT 6"o.c.
SOLE PLATE TO JOIST OR BLOCKING (TYPICAL FACE NAIL)	16d (3 1/2" x 0.135") AT 16"o.c. 3"x0.131" NAILS AT 8"o.c.	TOP PLATES, LAPS AND INTERSECTIONS (FACE NAIL)	2- 16d COMMON (3 1/2"x0.162") 3- 3"x0.131" NAILS
SOLE PLATE TO JOIST OR BLOCKING AT BRACE WALL PANEL (BRACED WALL PANELS)	3- 16d (3 1/2" x 0.135") AT 16"o.c. 4- 3"x0.131" NAILS AT 16"o.c.	CONTINUOUS HEADER, TWO PIECES (16"o.c. ALONG EDGE)	16d COMMON (3 1/2"x0.162")
TOP PLATE TO STUD (END NAIL)	2- 16d COMMON (3 1/2" x 0.162") 3- 3"x0.131" NAILS	CEILING JOISTS TO PLATE (TOENAIL)	3- 8d COMMON (2 1/2"x0.131") 3- 3"x0.131" NAILS
STUD TO SOLE (SILL) PLATE (TOENAIL)	4- 8d COMMON (2 1/2"x0.131") 4- 3"x0.131" NAILS	CONTINUOUS HEADER TO STUD (TOENAIL)	4- 8d COMMON (2 1/2"x0.131")
(END NAIL)	2- 16d COMMON (3 1/2" x 0.162") 3- 3"x0.131" NAILS	DOUBLE SILL PLATES (FACE NAIL, STAGGER)	10d COMMON AT 12"o.c. EACH FACE
		BUILT-UP CORNER STUDS	16d (3 1/2"x0.162") AT 24"o.c. 3"x0.131" NAILS AT 16"o.c.

NOTES:
ALL FASTENERS FOR PRESERVATIVE AND FIRE RETARDANT TREATED WOOD SHALL BE HOT DIPPED ZINC COATED GALVANIZED STEEL, STAINLESS STEEL, SILICONE BRONZE, OR COPPER, UNLESS WOOD IS BORATE TREATED. EXCEPTION: PLAIN CARBON STEEL FASTENERS, INCLUDING NUTS AND WASHERS, IN SBX/DOT AND ZINC BORATE PRESERVATIVE-TREATED WOOD IN AN INTERIOR, DRY ENVIRONMENT ARE PERMITTED.

SCHEDULE E

SHEATHING TYPE AND NAILING SCHEDULE

LOCATION	SHEATHING	EDGE NAILING[1]	FIELD NAILING[1]	BOUNDARY NAILING[2]	BLOCKING AT PANEL EDGES
ROOF, UNBLOCKED	19/32" 40/20 SPAN RATING	10d AT 6"o.c.	10d AT 6"o.c.	10d AT 6"o.c.	NO
ROOF, BLOCKED[4] TYPE 1	19/32" 40/20 SPAN RATING	10d AT 6"o.c.	10d AT 6"o.c.	10d AT 4"o.c.	YES
EQUIPMENT[3] PLATFORM	23/32" 48/24 SPAN RATING T&G	10d AT 6"o.c.	10d AT 12"o.c.	10d AT 6"o.c.	NO
ROSTRUM[3]	(2) LAYERS 19/32" 40/20 SPAN RATING	10d AT 6"o.c.	10d AT 12"o.c.	10d AT 6"o.c.	NO
PLATFORM[3]	(2) LAYERS 19/32" 40/20 SPAN RATING	10d AT 6"o.c.	10d AT 12"o.c.	10d AT 6"o.c.	NO
WALLS	SEE WOOD WALL SCHEDULE				

NOTES:
1. SEE PARTIAL PLAN BELOW FOR LOCATION OF BOUNDARY, EDGE, AND FIELD NAILING.
2. ALL FASTENERS FOR PRESERVATIVE AND FIRE RETARDANT TREATED WOOD SHALL BE HOT DIPPED SINZ COATED GLAVANIZED STEEL, STAINLESS STEEL, SILICONE BRONZE, OR COPPER, UNLESS WOOD IS BORATE TREATED. EXCEPTION: PLAIN CARBON STEEL FASTENERS, INCLUDING NUTS AND WASHERS, IN SBX/DOT AND ZINC BORATE PRESERVATIVE- TREATED WOOD IN AN INTERIOR, DRY ENVIRONMENT ARE PERMITTED.
3. FOR EQUIPMENT PLATFORM, ROSTRUM, AND PLATFORM SHEATHING SHALL BE GLUED AND NAILED TO THE STRUCTURE.
4. SPECIAL INSPECTION REQUIRED.

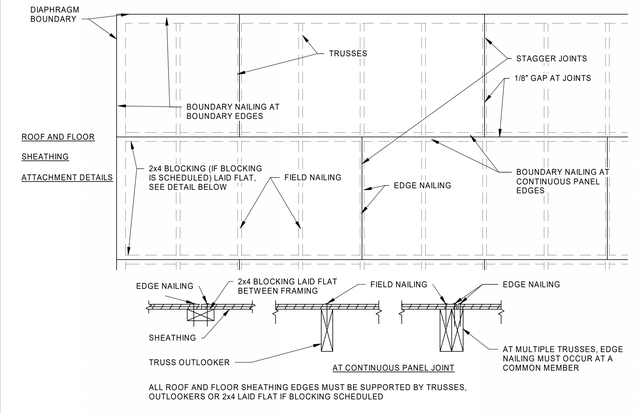

SCHEDULE F

TYPICAL BLOCKING SCHEDULE

DOOR STOPS	STAIR BLOCKING
VISUAL DISPLAYS	DECORATIVE METAL BETWEEN WINDOWS
MARKER BOARDS	DRINKING FOUNTAINS
TACK BOARDS	WALL HUNG SINKS
BABY CHANGING STATIONS	ROSTRUM
EXIT SIGNS	DECORATION HOOKS
CHAIR RAIL	JANITOR SHELVING
COAT RACKS	RA VENTS AT ENTRIES
CABINETS	COLUMNS AT ENTRIES
SOUND PANELS	CAN LIGHTS AT ENTRIES
TOILET PARTITIONS	HYMN BOOK SHELVES
HANDICAP BARS	DIMMER SWITCHES IN GYM
BATHROOM ACCESSORIES	CURTAIN AT STAGE
TOWEL DISPENSORS	CURTAINS IN OFFICES
TOILET PAPER HOLDERS	JANITOR TAP AND HOSE HARDWARE
NAPKIN HOLDERS	FONT MIRRORS
SHELVES	FONT HANDRAILS
MIRRORS	FONT BENCHES
COUNTERS	NAILING HOOKS
COUNTER BRACKETS	FONT GLASS SCREEN
ACCESS PANELS	CHAIR STORAGE SHELVING
HANDRAILS	INTERIOR SOFFIT FOR SIX PIECE CORNICE
FIRE CABINETS	WATER HEATERSEISMIC STRAPS (2)
WALL MOUNTED HANDRAILS	UNISTRUT, RUNNING PARALLEL TO FRAMING

bhd ARCHITECTS
www.bhdarchitects.com
Phone 801.571.0010
Fax 801.571.0303
Toll Free 888.571.0010
65 East Wadsworth Park Drive
Suite 205 Draper, Utah 84020

PROFESSIONAL ENGINEER Matthew C. McBride No. 353893 8/14/24 STATE OF UTAH

THE CHURCH OF JESUS CHRIST OF LATTER-DAY SAINTS

Orem YSA 3rd 10 Ward Building
Orem UT YSA 3rd Stake

Approx.1700 West 575 South
Vineyard, Utah 84059

BID #: 2344
Date: 15 Aug 2024
County Parcel: 39-226-0001
Plan Series: 2024 10 Ward SC
Owner #: 390-1874

Drawing issue and Revision Schedule

#	Date	Description
1	15 Aug 2024	Bid Documents

SCHEDULES

S604

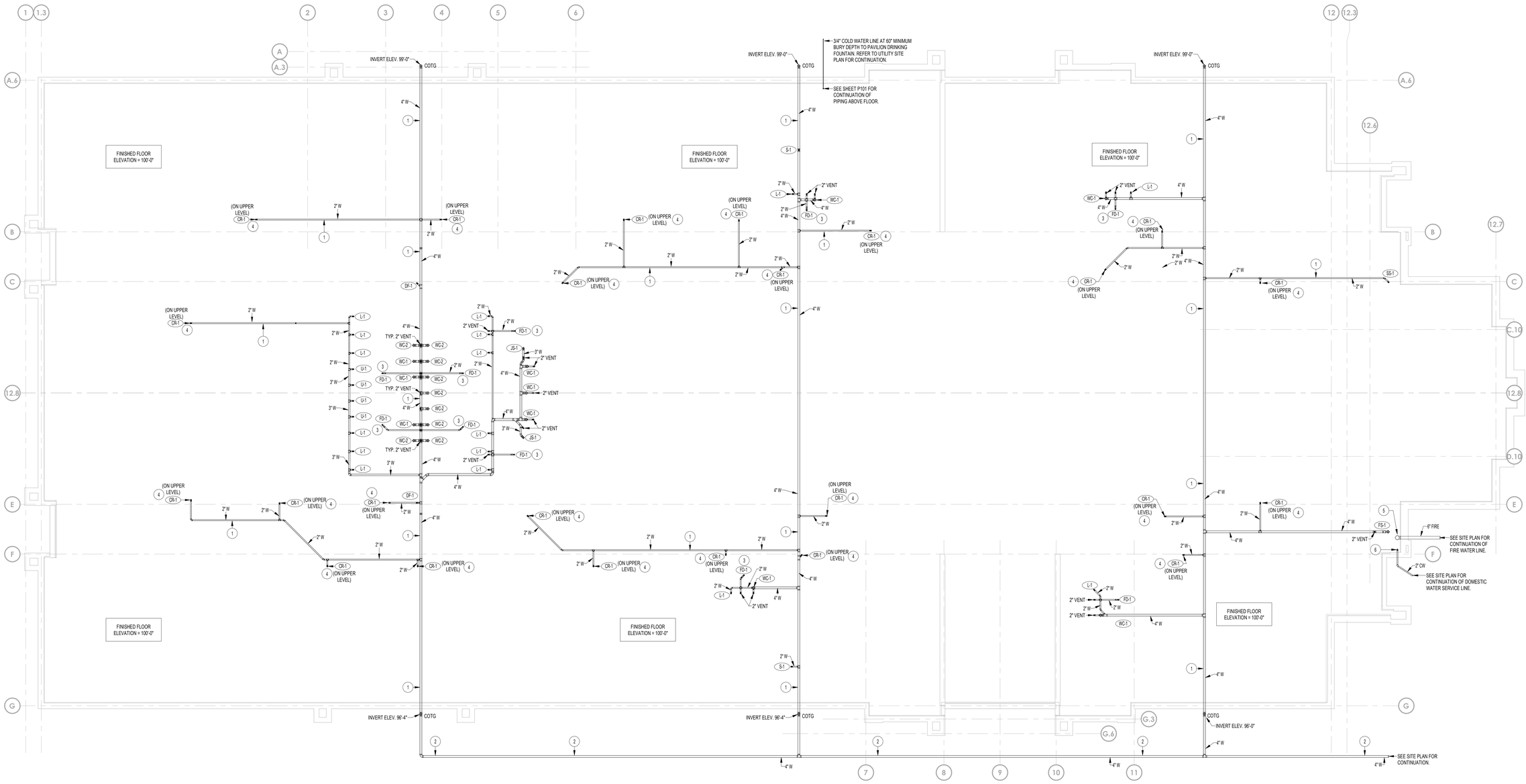

PLUMBING FOUNDATION PLAN

SCALE: 1/8" = 1'-0"

PLAN NOTES:

1. ALL WASTE LINES BELOW FLOORS TO BE GRADED AT 1/4" SLOPE PER FOOT. PROVIDE CLEAN OUTS IN LINES AT ALL CHANGES IN DIRECTION AND AT 100'-0" MAXIMUM INTERVALS.
2. REFER TO SITE PLAN FOR ACTUAL LOCATION AND GRADING OF WASTE PIPING OUTSIDE OF BUILDING. PIPE SHOWN HERE FOR COORDINATION PURPOSES.
3. PROVIDE TRAP SEAL WITH FLOOR DRAIN. TRAP SEAL TO BE UPC APPROVED. SEE SPECIFICATIONS.
4. CONDENSATE RECEIVER LOCATED ON EQUIPMENT PLATFORM LEVEL. RISE 2" WASTE LINE UP IN WALL ABOVE WITH CLEANOUT IN CORRIDOR SIDE OF WALL AT 12" ABOVE FLOOR. REFER TO SHEET P101 FOR CONTINUATION OF PIPING ABOVE.
5. FIRE WATER LINE TO BUILDING. COORDINATE ELECTRIC HEATER AND DOMESTIC WATER SERVICE LINE WITH FIRE RISER. REFER TO FIRE SPRINKLER DRAWINGS FOR EXACT RISER LOCATION.
6. 2" DOMESTIC COLD WATER SERVICE LINE TO BUILDING. RISE UP THRU FLOOR AND CONNECT TO PRV STATION ABOVE. REFER TO LARGE SCALE PLAN ON SHEET P402 AND TO WATER PRV DETAIL K/ P501.

GENERAL NOTES:

- A- ALL PLUMBING SHALL COMPLY WITH THE MOST STRINGENT OF APPLICABLE CODES, ORDINANCES, OR THE SPECIFICATIONS.
- B- ALL FIXTURES SHALL BE PROPERLY VENTED TO THE ATMOSPHERE.
- C- REFER TO MECHANICAL SHEETS FOR LOCATIONS OF MECHANICAL EQUIPMENT AND DUCTWORK. COORDINATE ALL WORK TO FIT AVAILABLE SPACE.
- D- GAS LINE TO BE RUN ON EQUIPMENT PLATFORM LEVEL UNLESS OTHERWISE NOTED OR SHOWN.
- E- WATER PIPING AND VENT PIPING SHALL BE RUN ON EQUIPMENT PLATFORM LEVEL UNLESS OTHERWISE NOTED OR SHOWN.
- F- FOR INDIVIDUAL LINE SIZES TO FIXTURES, SEE PLUMBING FIXTURE SCHEDULE ON SHEET P401.
- G- DO NOT RUN PLUMBING PIPES IN SHEAR WALLS UNLESS NOTED OTHERWISE.
- H- MINIMUM WASTE PIPING BELOW CONCRETE FLOORS SHALL BE 2".
- J- DUE TO CLOSE PROXIMITY OF WATER, VENT AND DRAIN PIPING AS WELL AS DUCTWORK, EQUIPMENT, AND HVAC PIPING, THE PLUMBING CONTRACTOR SHALL COORDINATE THE INSTALLATION WITH THE MECHANICAL AND SHEET METAL CONTRACTORS.
- K- FOR PIPE SIZES NOT SHOWN ON THIS SHEET, REFER TO LARGE SCALE PLANS, PIPING SCHEMATICS AND FIXTURE SCHEDULE ON SHEET P401.
- L- REFER TO MECHANICAL SHEETS FOR ANY ADDITIONAL WORK.
- M- COORDINATE LOCATION OF EACH DOMESTIC WATER ISOLATION VALVE WITH MECHANICAL AND SHEET METAL INSTALLATION TO PROVIDE REQUIRED ACCESS AND VISIBILITY TO VALVE.
- N- CONTRACTOR SHALL RUN ALL WATER LINES WITHIN BUILDING INSULATION ENVELOPE.
- O- LEAVE 6" CLEAR SPACE ON EQUIPMENT DECK BETWEEN FURNACES, DUCTWORK, ETC. AND HIGH WALL FOR GAS PIPING, CONDUIT, DRAINS, ETC. RACK ALL PIPING AND CONDUIT ON WALL WITH UNISTRUT SUPPORTS.
- P- MINIMIZE RUNNING PIPES ON PLATFORM FLOOR THAT WILL IMPEDE WALKWAYS.

bhd ARCHITECTS
www.bhdarchitects.com
Phone 801.571.0010
Fax 801.571.0303
Toll Free 888.571.0010
65 East Wadsworth Park Drive
Suite 205 Draper, Utah 84020



Engineered Systems Associates
1355 EAST CENTER
POCATELLO, IDAHO 83201
PHONE: (208) 233-0501
FAX: (208) 233-0529
EMAILesa@engsystems.com
ESA JOB NUMBER: 24065

THE CHURCH OF JESUS CHRIST OF LATTER-DAY SAINTS

Orem YSA 3rd 10 Ward Building
Orem UT YSA 3rd Stake

Approx. 1700 West 575 South
Vineyard, Utah 84059

Owner #: 590-1876
Plan Series: 2024 10 Ward SC
County Parcel: 39-228:0301
BHD #: 2344
Date: 15 AUG 2024

Drawing Issue and Revision Schedule

#	Date	Description
1	15 Aug 2024	Bid Drawings

PLUMBING FOUNDATION PLAN

P100

Printed 8/14/2024 4:16:18 PM. © 2022 BHD Architects This document and the ideas and designs incorporated herein, as an instrument of professional service, are the property of BHD Architects, and may not be used or published in whole or in part for any other project without written authorization of BHD Architects.

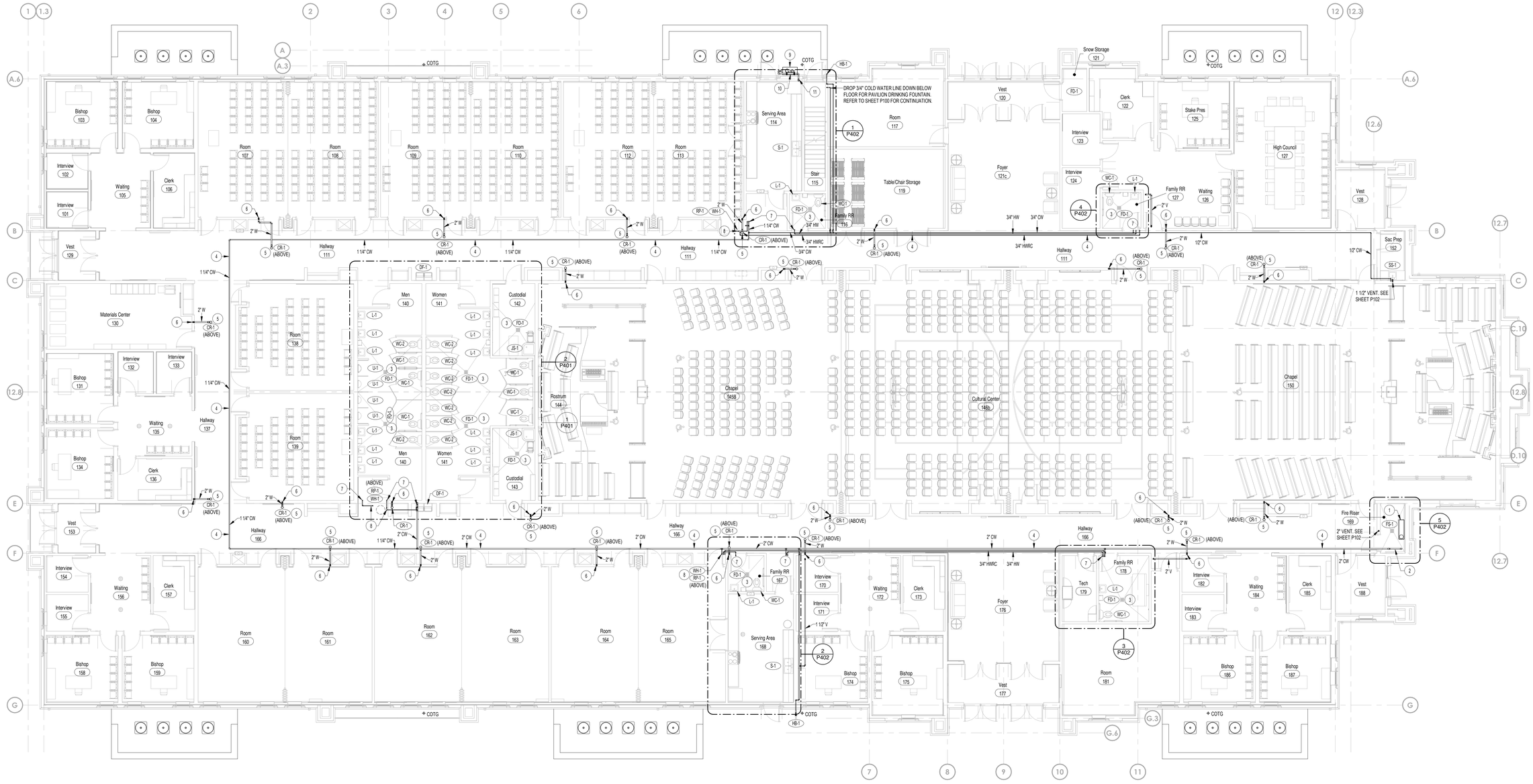

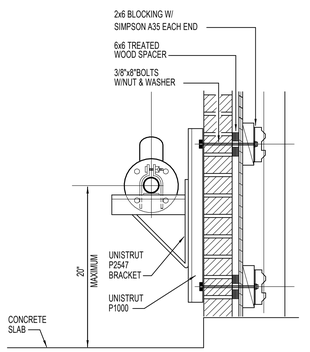

1 SECTION
SCALE: NONE

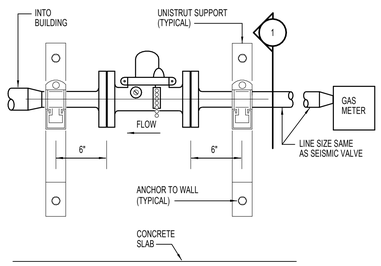

A SEISMIC VALVE DETAIL
SCALE: NONE

NOTES:
1. VALVE MUST BE INSTALLED WITH THE CHAIN AND RESET BUTTON FACING OUT AND ACCESSIBLE.
2. THE CHAIN IS A PLUMB LINE. MAKE SURE VALVE IS MOUNTED ABSOLUTELY LEVEL AND NO PART OF THE CHAIN IS TOUCHING THE RING.
3. VALVE MUST BE INSTALLED WITH GAS FLOW IN DIRECTION OF "ARROW" CAST INTO VALVE BODY.
4. SIZE SEISMIC VALVE ACCORDING TO TOTAL BUILDING MBH.
5. SEISMIC VALVE TO BE LOCATED WITHIN THE FIRST SIX LINEAL FEET OF PIPE FROM METER.
6. SEISMIC VALVE MUST BE 2" MIN. WITH FLANGE.

PLUMBING FLOOR PLAN
SCALE: 1/8" = 1'-0"

LEGEND

SYMBOL OR ABBREVIATION	MEANING	SYMBOL OR ABBREVIATION	MEANING
HOT WATER LINE		WALL CLEANOUT	WCO
COLD WATER LINE		CLEANOUT	CO
VENT LINE		CLEANOUT TO GRADE	COTG
WASTE LINE		FLOOR CLEANOUT	FCO
GAS LINE	G	BALL VALVE	
VENT THRU ROOF	VTR	UNION	
CONDENSATE DRAIN	CD	SNOW MELT SYSTEM HOT WATER SUPPLY	SMS
SECONDARY CONDENSATE DRAIN	SD	SNOW MELT SYSTEM HOT WATER RETURN	SMR

PLAN NOTES:

1. FIRE WATER LINE UP THRU FLOOR AND. FIRE RISER AND ALARM VALVE BY FIRE SPRINKLER CONTRACTOR. REFER TO FIRE SPRINKLER DRAWINGS.
2. RISE 2" DOMESTIC COLD WATER SERVICE LINE UP THRU FLOOR AND CONNECT TO PRV STATION ABOVE. REFER TO LARGE SCALE PLAN ON SHEET P402 AND TO WATER PRV DETAIL ON SHEET K/P501.
3. PROVIDE TRAP SEAL WITH FLOOR DRAIN. TRAP SEAL TO BE UPC APPROVED. SEE SPECIFICATIONS.
4. DOMESTIC WATER PIPING TO BE RUN ABOVE CEILINGS AND/OR EQUIPMENT PLATFORM ABOVE. PIPING SHOWN HERE FOR CLARITY. PIPING RUNS ARE SHOWN HORIZONTALLY FOR CLARITY PURPOSES. PIPING SHALL BE STACKED ON WALL. REFER TO GENERAL NOTE #O.
5. CONDENSATE RECEIVER LOCATED ON EQUIPMENT PLATFORM LEVEL. DROP 2" WASTE LINE DOWN IN WALL WITH CLEANOUT AT 12" ABOVE FLOOR. REFER TO SHEET P102 FOR VENT PIPING ABOVE. REFER TO DETAIL A/P501 FOR TYPICAL INSTALLATION OF FIXTURE.
6. VENT PIPING UP IN WALL. REFER TO SHEET P102 FOR CONTINUATION.
7. REFER TO LARGE SCALE PLANS ON SHEETS P401 AND P402 FOR CONTINUATION OF WATER AND VENT PIPING ABOVE TOILET ROOMS.
8. RISE 3/4" COLD WATER AND 3/4" HOT WATER LINES, AND 3/4" HOT WATER RECIRC. UP AND CONNECT TO WATER HEATER ON EQUIPMENT PLATFORM. REFER TO SHEET P102 FOR WATER HEATER AND RECIRCULATING PUMP LOCATIONS.
9. GAS METER BY LOCAL GAS COMPANY. SIZE FOR 2,750,000 BTU WITH 2 PSI DISCHARGE PRESSURE. REFER TO GAS LOAD CALCULATIONS ON SHEET P601.
10. RISE 2" GAS LINE ABOVE METER AND INSTALL SEISMIC GAS VALVE. SEE DETAIL ON THIS SHEET.
11. RISE 2" (2 psi) GAS LINE UP INSIDE WALL CAVITY TO ABOVE CEILINGS. REFER TO SHEET P102 FOR CONTINUATION OF PIPING.

GENERAL NOTES:

- A- ALL PLUMBING SHALL COMPLY WITH THE MOST STRINGENT OF APPLICABLE CODES, ORDINANCES, OR THE SPECIFICATIONS.
- B- ALL FIXTURES SHALL BE PROPERLY VENTED TO THE ATMOSPHERE.
- C- REFER TO MECHANICAL SHEETS FOR LOCATIONS OF MECHANICAL EQUIPMENT AND DUCTWORK. COORDINATE ALL WORK TO FIT AVAILABLE SPACE.
- D- GAS LINE TO BE RUN ON EQUIPMENT PLATFORM LEVEL UNLESS OTHERWISE NOTED OR SHOWN.
- E- WATER PIPING AND VENT PIPING SHALL BE RUN ON EQUIPMENT PLATFORM LEVEL UNLESS OTHERWISE NOTED OR SHOWN.
- F- FOR INDIVIDUAL LINE SIZES TO FIXTURES, SEE PLUMBING FIXTURE SCHEDULE ON SHEET P402.
- G- DO NOT RUN PLUMBING PIPES IN SHEAR WALLS UNLESS NOTED OTHERWISE.
- H- MINIMUM WASTE PIPING BELOW CONCRETE FLOORS SHALL BE 2".
- J- DUE TO CLOSE PROXIMITY OF WATER, VENT AND DRAIN PIPING AS WELL AS DUCTWORK, EQUIPMENT, AND HVAC PIPING, THE PLUMBING CONTRACTOR SHALL COORDINATE THE INSTALLATION WITH THE MECHANICAL AND SHEET METAL CONTRACTORS.
- K- FOR PIPE SIZES NOT SHOWN ON THIS SHEET, REFER TO LARGE SCALE PLANS, PIPING SCHEMATICS AND FIXTURE SCHEDULE ON SHEET P402.
- L- REFER TO MECHANICAL SHEETS FOR ANY ADDITIONAL WORK.
- M- COORDINATE LOCATION OF EACH DOMESTIC WATER ISOLATION VALVE WITH MECHANICAL AND SHEET METAL INSTALLATION TO PROVIDE REQUIRED ACCESS AND VISIBILITY TO VALVE.
- N- CONTRACTOR SHALL RUN ALL WATER LINES WITHIN BUILDING INSULATION ENVELOPE.
- O- LEAVE 6" CLEAR SPACE ON EQUIPMENT DECK BETWEEN FURNACES, DUCTWORK, ETC. AND HIGH WALL FOR GAS PIPING, CONDUIT, DRAINS, ETC. RACK ALL PIPING AND CONDUIT ON WALL WITH UNISTRUT SUPPORTS.
- P- MINIMIZE RUNNING PIPES ON PLATFORM FLOOR THAT WILL IMPEDE WALKWAYS.

bhd ARCHITECTS
www.bhdarchitects.com
Phone 801.571.0010
Fax 801.571.0303
Toll Free 888.571.0010
65 East Wadsworth Park Drive
Suite 205 Draper, Utah 84020

LICENSED PROFESSIONAL ENGINEER
DAVID L. HANSEN
Aug 15, 2024
STATE OF UTAH

ESA Engineered Systems Associates
1355 EAST CENTER
POCATELLO, IDAHO 83201
PHONE: (208) 233-0501
FAX: (208) 233-0529
EMAIL:esa@engsystems.com
ESA JOB NUMBER: 24065

THE CHURCH OF JESUS CHRIST OF LATTER-DAY SAINTS

Orem YSA 3rd 10 Ward Building
Orem UT YSA 3rd Stake
Approx. 1700 West 575 South
Vineyard, Utah 84059

Date: 15 AUG 2024 | BID #: 2344 | County Parcel: 39-226:0001 | Plan Series: 2024 10 Ward SC | Owner #: 390-1876

Drawing Issue and Revision Schedule

#	Date	Description
1	15 Aug 2024	Bid Drawings

PLUMBING FLOOR PLAN

P101

Printed: 8/14/2024 4:16:27 PM © 2022 BHD Architects This document and the ideas and designs incorporated herein, as an instrument of professional service, are the property of BHD Architects, and may not be used or published in whole or in part for any other project without written authorization of BHD Architects.

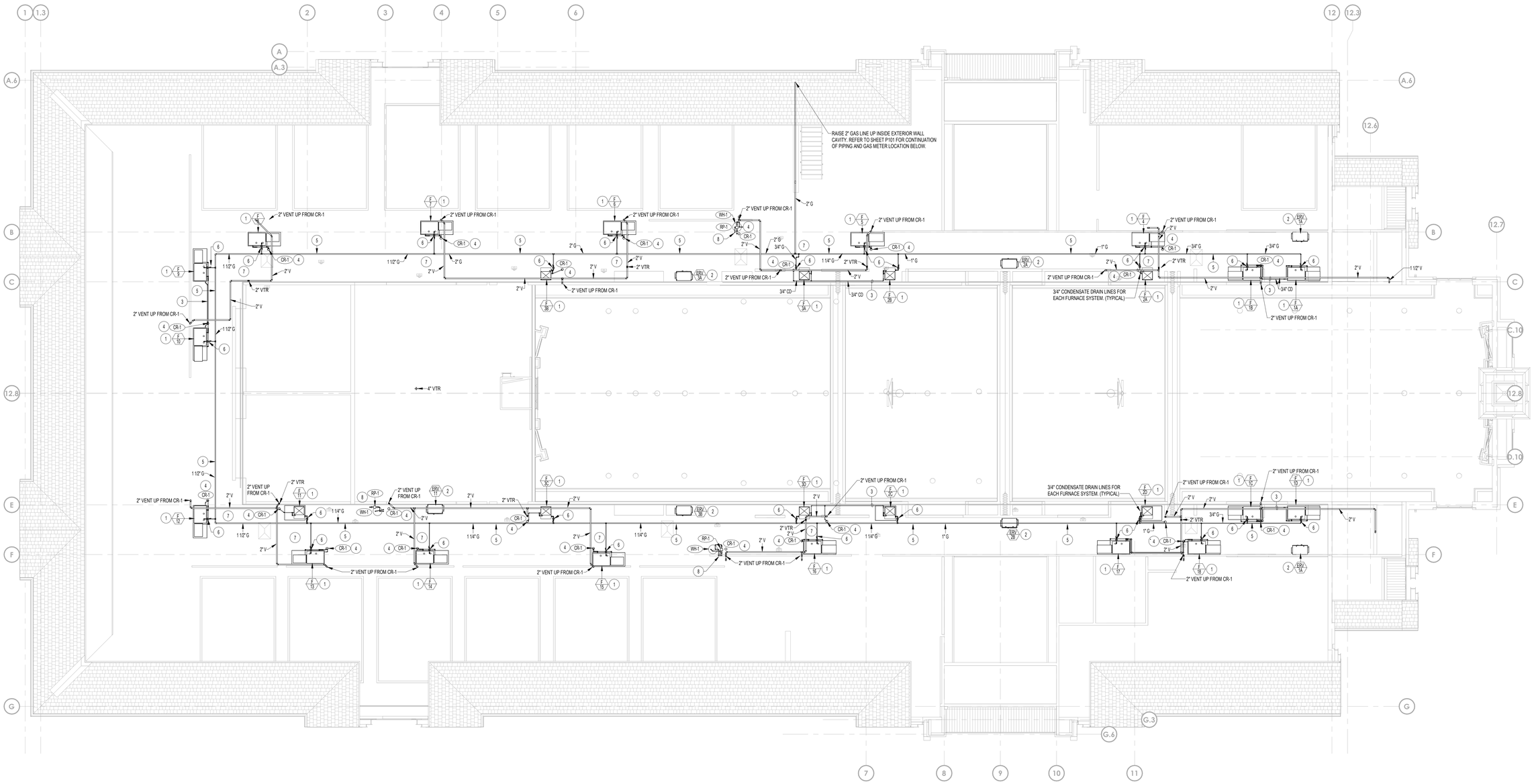

EQUIPMENT PLATFORM PLUMBING PLAN

SCALE: 1/8" = 1'-0"

PLAN NOTES:

1. FURNACE, DX COOLING COIL, AND DRAIN PAN BY MECHANICAL CONTRACTOR. REFER TO MECHANICAL DRAWINGS. PLUMBING CONTRACTOR TO ROUGH-IN AND CONNECT 3/4" CONDENSATE DRAIN LINE FROM DX COIL AND FROM FURNACE. CONNECT SEPARATE 3/4" DRAIN LINE TO DRAIN PAN. RUN (2) SEPARATE DRAIN LINES FROM EQUIPMENT TO NEAREST CR-1 DRAIN HUB.
2. ERV UNIT TO BE INSTALLED BY MECHANICAL CONTRACTOR. REFER TO MECHANICAL DRAWINGS. COORDINATE DRAIN LINES, WATER LINES, AND GAS PIPING WITH UNIT AND CORRESPONDING DUCTWORK.
3. RUN CONDENSATE DRAIN LINE NEAR FLOOR. SUPPORT WITH FLOOR MOUNTED SUPPORTS AT 6'-0" MAXIMUM SPACING. PIPING TO BE GRADED AT 1/8" MINIMUM SLOPE TOWARDS CR-1. ADJUST SUPPORTS AS REQUIRED FOR GRADING. COORDINATE PIPE WITH EQUIPMENT MOUNTED ON PLATFORM FLOOR. SEE DETAIL E/P501
4. CONDENSATE RECEIVER LOCATED ON EQUIPMENT PLATFORM LEVEL. DROP 2" WASTE LINE DOWN IN WALL BELOW. RISE 2" VENT UP AND CONNECT TO NEAREST VTR AS SHOWN. REFER TO DETAIL A/P501 FOR TYPICAL CR-1 INSTALLATION.
5. RUN GAS PIPING ABOVE EQUIPMENT PLATFORM. REFER TO MECHANICAL DRAWINGS TO COORDINATE WITH DUCTWORK AND EQUIPMENT. PIPING TO BE SECURED TO HIGH WALL BEHIND EQUIPMENT AND DUCTWORK.
6. CONNECT 3/4" GAS LINE TO FURNACE WITH SHUT-OFF VALVE, PRESSURE REGULATOR AND FLEXIBLE HOSE CONNECTION. REFER TO DETAIL G/P501 FOR TYPICAL GAS LINE CONNECTION. VENT REGULATOR TO EXTERIOR AS RECOMMENDED BY MANUFACTURER.
7. RISE ALL PIPING TO MINIMUM OF 7'-0" ABOVE PLATFORM FLOOR WHEN CROSSING FROM ONE SIDE TO THE OTHER. COORDINATE PIPING WITH EQUIPMENT AND DUCTWORK. REFER TO MECHANICAL DRAWINGS FOR DUCTWORK LOCATIONS.
8. RISE 3/4" HOT AND COLD WATER LINES, AND 3/4" HOT WATER RECIRC. LINES UP THRU FLOOR AND CONNECT TO WATER HEATER. REFER TO DETAIL D/P501 FOR TYPICAL PIPING CONNECTIONS.

GENERAL NOTES:

- A- ALL PLUMBING SHALL COMPLY WITH THE MOST STRINGENT OF APPLICABLE CODES, ORDINANCES, OR THE SPECIFICATIONS.
- B- ALL FIXTURES SHALL BE PROPERLY VENTED TO THE ATMOSPHERE.
- C- REFER TO MECHANICAL SHEETS FOR LOCATIONS OF MECHANICAL EQUIPMENT AND DUCTWORK. COORDINATE ALL WORK TO FIT AVAILABLE SPACE.
- D- GAS LINE TO BE RUN ON EQUIPMENT PLATFORM LEVEL UNLESS OTHERWISE NOTED OR SHOWN.
- E- WATER PIPING AND VENT PIPING SHALL BE RUN ON EQUIPMENT PLATFORM LEVEL UNLESS OTHERWISE NOTED OR SHOWN.
- F- FOR INDIVIDUAL LINE SIZES TO FIXTURES, SEE PLUMBING FIXTURE SCHEDULE ON SHEET P402.
- G- DO NOT RUN PLUMBING PIPES IN SHEAR WALLS UNLESS NOTED OTHERWISE.
- H- MINIMUM WASTE PIPING BELOW CONCRETE FLOORS SHALL BE 2".
- J- DUE TO CLOSE PROXIMITY OF WATER, VENT, AND DRAIN PIPING AS WELL AS DUCTWORK, EQUIPMENT, AND HVAC PIPING, THE PLUMBING CONTRACTOR SHALL COORDINATE THE INSTALLATION WITH THE MECHANICAL AND SHEET METAL CONTRACTORS.
- K- FOR PIPE SIZES NOT SHOWN ON THIS SHEET, REFER TO LARGE SCALE PLANS, PIPING SCHEMATICS AND FIXTURE SCHEDULE ON SHEET P402.
- L- REFER TO MECHANICAL SHEETS FOR ANY ADDITIONAL WORK.
- M- COORDINATE LOCATION OF EACH DOMESTIC WATER ISOLATION VALVE WITH MECHANICAL AND SHEET METAL INSTALLATION TO PROVIDE REQUIRED ACCESS AND VISIBILITY TO VALVE.
- N- CONTRACTOR SHALL RUN ALL WATER LINES WITHIN BUILDING INSULATION ENVELOPE.
- O- LEAVE 6" CLEAR SPACE ON EQUIPMENT DECK BETWEEN FURNACES, DUCTWORK, ETC. AND HIGH WALL FOR GAS PIPING, CONDUIT, DRAINS, ETC. RACK ALL PIPING AND CONDUIT ON WALL WITH UNISTRUT SUPPORTS.
- P- MINIMIZE RUNNING PIPES ON PLATFORM FLOOR THAT WILL IMPEDE WALKWAYS.

bhd ARCHITECTS
www.bhdarchitects.com
Phone 801.571.0010
Fax 801.571.0303
Toll Free 888.571.0010
65 East Wadsworth Park Drive
Suite 205 Draper, Utah 84020

STATE OF UTAH PROFESSIONAL ENGINEER
DAVID L. HANSEN
Aug 15, 2024

Engineered Systems Associates
1355 EAST CENTER
POCATELLO, IDAHO 83201
PHONE: (208) 233-0501
FAX: (208) 233-0529
EMAIL:esa@engsystems.com
ESA JOB NUMBER: 24065

THE CHURCH OF JESUS CHRIST OF LATTER-DAY SAINTS

Orem YSA 3rd 10 Ward Building
Orem UT YSA 3rd Stake

Approx. 1700 West 575 South
Vineyard, Utah 84059

Owner #: 390-1876
Plan Series: 2024 10 Ward SC
County Parcel: 39-228:0301
BID #: 2344
Date: 15 AUG 2024

Drawing Issue and Revision Schedule		
#	Date	Description
1	15 Aug 2024	Bid Drawings

EQUIPMENT PLATFORM PLUMBING PLAN

P102

Printed 8/14/2024 4:16:31 PM. © 2022 BHD Architects This document and the ideas and designs incorporated herein, as an instrument of professional service, are the property of BHD Architects, and may not be used or published in whole or in part for any other project without written authorization of BHD Architects.

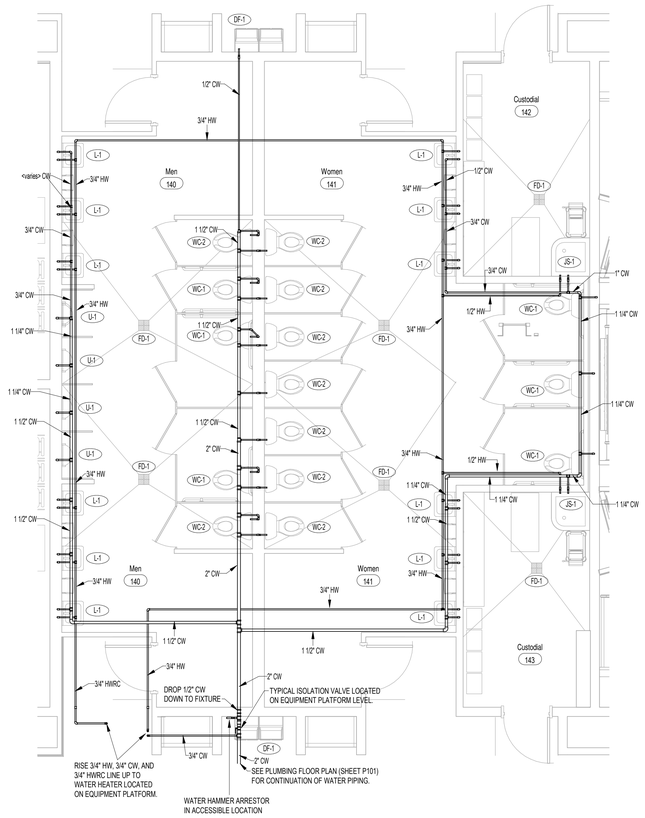

1 P401 LARGE SCALE WATER PIPING PLAN - TOILET ROOMS 140 & 141

SCALE: 1/4" = 1'-0"

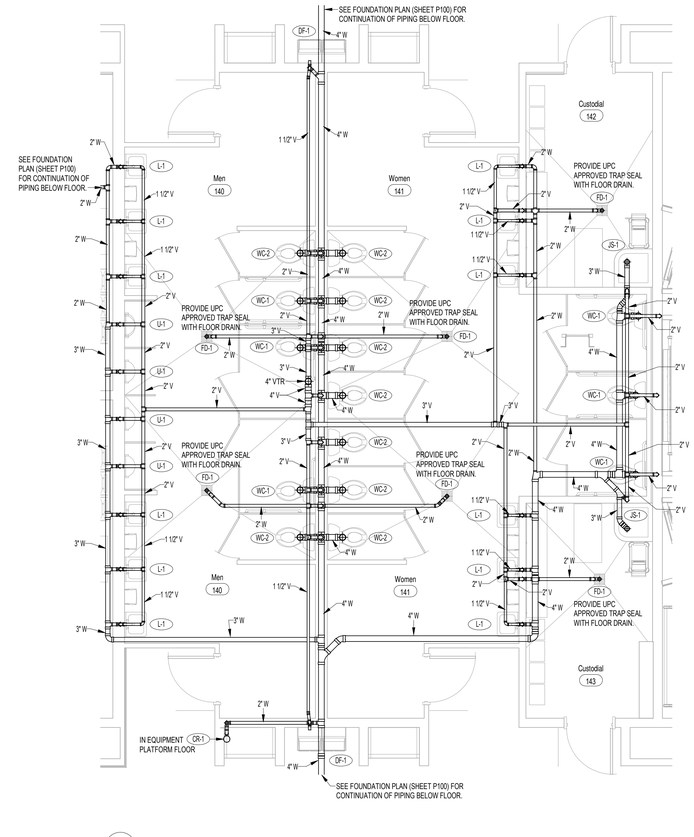

2 P401 LARGE SCALE WASTE AND VENT PIPING PLAN - TOILET ROOMS 140 & 141

SCALE: 1/4" = 1'-0"

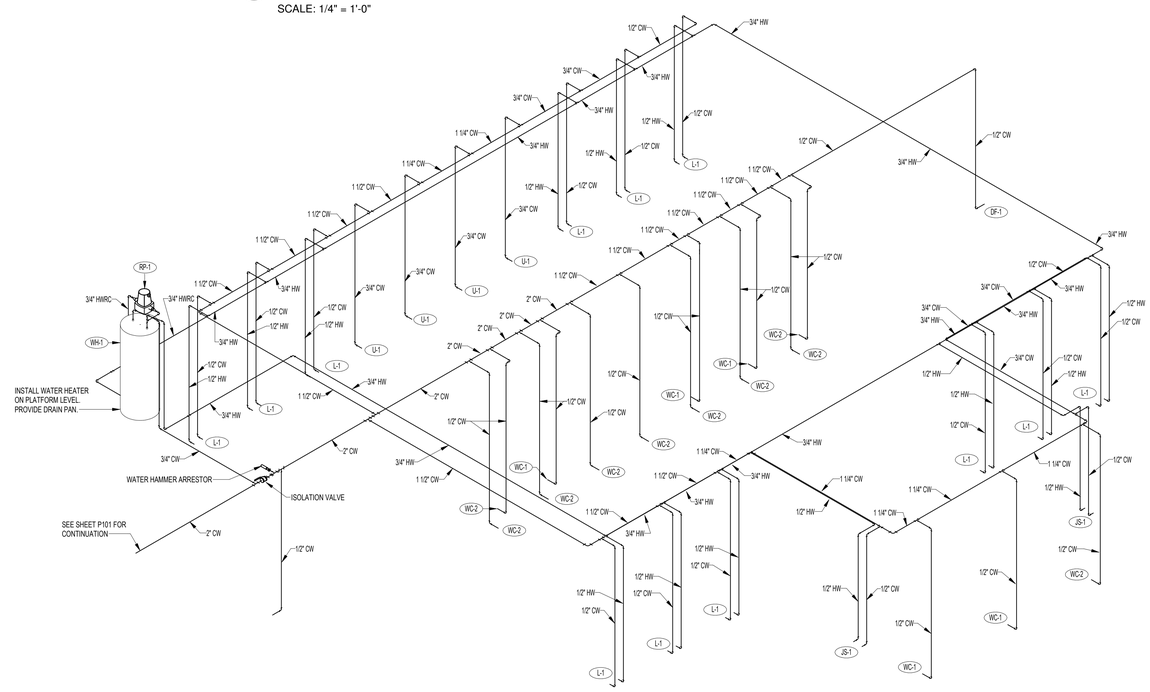

3 P401 WATER PIPING ISOMETRIC - TOILET ROOMS 140 & 141

NO SCALE:

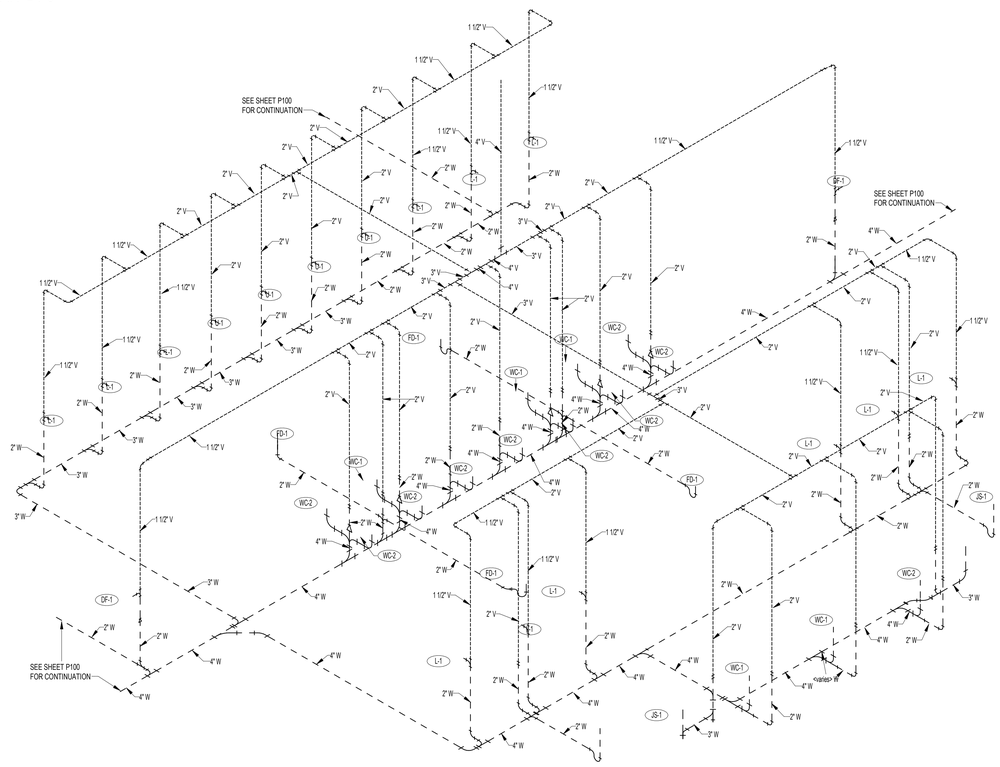

4 P401 WASTE AND VENT RISER DIAGRAM - TOILET ROOMS 140 & 141

NO SCALE:

bhd ARCHITECTS
www.bhdarchitects.com
Phone 801.571.0010
Fax 801.571.0303
Toll Free 888.571.0010
65 East Wadsworth Park Drive
Suite 205 Draper, Utah 84020

LICENSED PROFESSIONAL ENGINEER
DAVID L. HANSEN
Aug 15, 2024
STATE OF UTAH

ESA Engineered Systems Associates
1355 EAST CENTER
POCATELLO, IDAHO 83201
PHONE: (208) 233-0501
FAX: (208) 233-0529
EMAIL esa@engsystems.com
ESA JOB NUMBER: 24065

THE CHURCH OF JESUS CHRIST OF LATTER-DAY SAINTS

Orem YSA 3rd 10 Ward Building
Orem UT YSA 3rd Stake
Approx. 1700 West 575 South
Vineyard, Utah 84059

Date: 15 AUG 2024
BHD #: 2344
County Parcel: 39-226-0001
Plan Series: 2024 10 Ward SC
Owner #: 590-1515

Drawing Issue and Revision Schedule

#	Date	Description
1	15 Aug 2024	Bid Drawings

LARGE SCALE PLUMBING PLANS AND SCHEMATICS

P401

Printed 8/14/2024 4:16:36 PM © 2022 BHD Architects This document and the ideas and designs incorporated herein, as an instrument of professional service, are the property of BHD Architects. It shall not be used in any way without written authorization of BHD Architects.

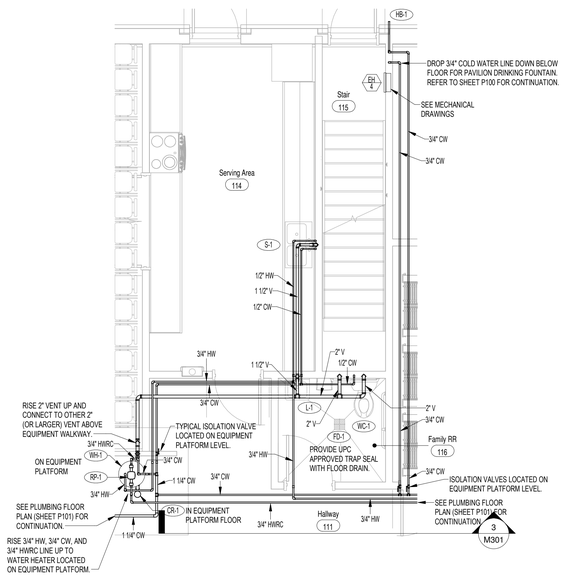

1 P402 LARGE SCALE SERVING AREA 114 & TOILET ROOM 116

SCALE: 1/4" = 1'-0"

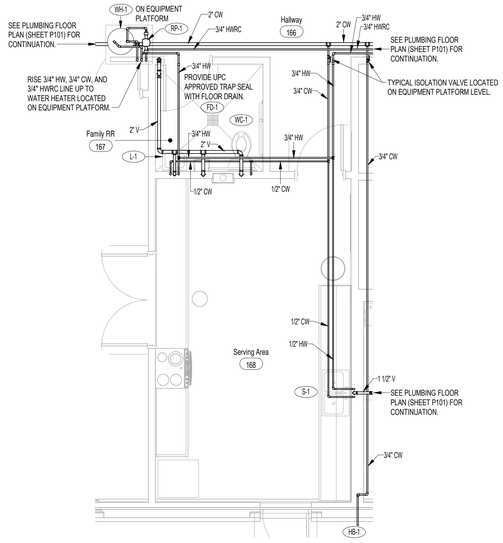

2 P402 LARGE SCALE SERVING AREA 168 & TOILET ROOM 167

SCALE: 1/4" = 1'-0"

PLUMBING FIXTURE SCHEDULE (1)(2)

MARK	FIXTURE	PIPE SIZE					REMARKS
		TRAP	WASTE	VENT	C.W.	H.W.	
CR-1	CONDENSATE RECEPTOR	1-1/2"	1-1/2"	2"	-	-	SEE DETAIL A/P502, FIELD ASSEMBLED
DF-1	DRINKING FOUNTAIN	1-1/2"	1-1/2"	1-1/2"	1/2"	-	ELECTRIC BI-LEVEL (ADA APPROVED) (3)
FD-1	FLOOR DRAIN	2"	2"	2"	-	-	WITH DEEP SEAL P-TRAP. PROVIDE UPC APPROVED TRAP SEAL SIMILAR TO JONES & STEPHENS MODEL P26001.
FS-1	FLOOR SINK	4"	4"	2"	-	-	WITH DEEP SEAL P-TRAP. PROVIDE UPC APPROVED TRAP SEAL SIMILAR TO JONES & STEPHENS MODEL P26001.
HB-1	EXTERIOR HOSE BIBB	-	-	-	3/4"	-	FREEZE PROOF - 20" MINIMUM LENGTH
JS-1	SERVICE SINK	3"	3"	3"	1/2"	1/2"	FLOOR TYPE
L-1	LAVATORY	1-1/2"	1-1/2"	1-1/2"	1/2"	1/2"	SELF SUPPORTING 20"x18" (ADA APPROVED) WITH OFFSET DRAIN AND PIPE COVERS FOR DRAIN, HOT & CW (3)
RP-1	HOT WATER RECIRC. PUMP	-	-	-	-	3/4"	IN-LINE BOOSTER PUMP WITH 3 GPM, 3 SPEED MOTOR AND STRAP-ON AQUASTAT
S-1	SERVING AREA SINK	1-1/2"	1-1/2"	1-1/2"	1/2"	1/2"	TWO COMPARTMENT
SS-1	SACRAMENT SINK	1-1/2"	1-1/2"	1-1/2"	1/2"	-	COUNTER TOP
U-1	URINAL	INT.	2"	2"	3/4"	-	FLUSH VALVE, WALL HUNG, HIGH EFFICIENCY URINAL (3)
WC-1	ADA WATER CLOSET	INT.	4"	2"	1/2"	-	FLUSH TANK, 18" RIM HEIGHT (HIGH EFFICIENCY TOILET)
WC-2	WATER CLOSET	INT.	4"	2"	1/2"	-	FLUSH TANK (HIGH EFFICIENCY TOILET)
WH-2	TANK TYPE WATER HEATER	-	-	-	3/4"	3/4"	ELECTRIC 50 GALLON, (2) NON-SIMULTANEOUS 4.5 KW ELEMENT WITH RECIRC. PUMP (208/60/1) WITH T&P RELIEF VALVE (4)

(1) COLD WATER FIXTURE UNITS ARE 129. WASTE WATER FIXTURE UNITS ARE 144.

(2) SEE SPECIFICATIONS FOR APPROVED MANUFACTURERS AND MODEL NUMBERS.

(3) WHEN MOUNTED PER ARCHITECTURAL ELEVATIONS, ADA ACCESSIBILITY REQUIREMENTS ARE SATISFIED.

(4) WATER HEATER TO BE COMPLETE WITH HEAT TRAP NIPPLES, MIXING VALVE, DRAIN PAN, AND 2 GALLON EXPANSION TANK.

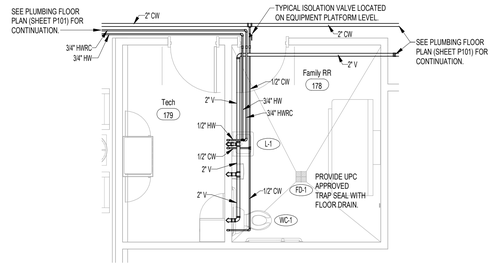

3 P402 LARGE SCALE FAMILY TOILET ROOM 178

SCALE: 1/4" = 1'-0"

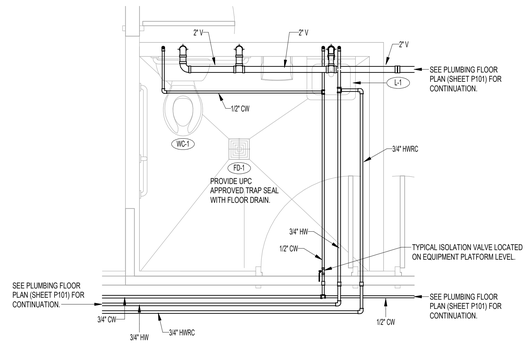

4 P402 LARGE SCALE TOILET ROOM 127

SCALE: 1/4" = 1'-0"

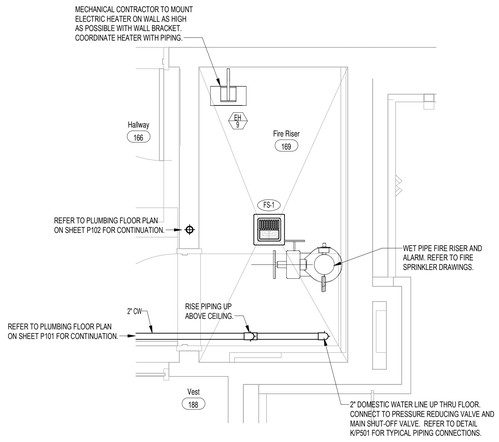

5 P402 LARGE SCALE FIRE RISER ROOM

SCALE: 1/4" = 1'-0"

bhd ARCHITECTS
www.bhdarchitects.com
Phone 801.571.0010
Fax 801.571.0303
Toll Free 888.571.0010
65 East Wadsworth Park Drive
Suite 205 Draper, Utah 84020

LICENSED PROFESSIONAL ENGINEER DAVID L. HANSEN Aug 15, 2024 STATE OF UTAH

ESA Engineered Systems Associates
1355 EAST CENTER
POCATELLO, IDAHO 83201
PHONE: (208) 233-0501
FAX: (208) 233-0529
EMAIL esa@engsystems.com
ESA JOB NUMBER: 24065

THE CHURCH OF JESUS CHRIST OF LATTER-DAY SAINTS

Orem YSA 3rd 10 Ward Building
Orem UT YSA 3rd Stake
Approx. 1700 West 575 South
Vineyard, Utah 84059

Owner #: 3PS-1874
Plan Series: 2024 10 Ward S/C
County Parcel: 37:228:0001
BHD #: 2344
Date: 15 AUG 2024

Drawing Issue and Revision Schedule

#	Date	Description
1	15 Aug 2024	Bid Drawings

LARGE SCALE PLUMBING PLANS AND SCHEDULE

P402

Printed: 8/14/2024 4:16:40 PM © 2022 BHD Architects This document and the ideas and designs incorporated herein, as an instrument of professional service, are the property of BHD Architects, and may not be used in any way for any other project without written authorization of BHD Architects.

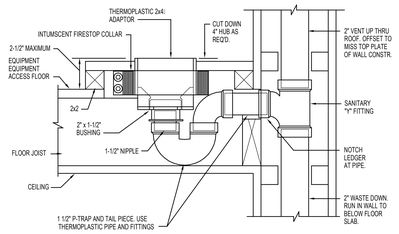

A CONDENSATE RECEIVER DETAIL
NO SCALE

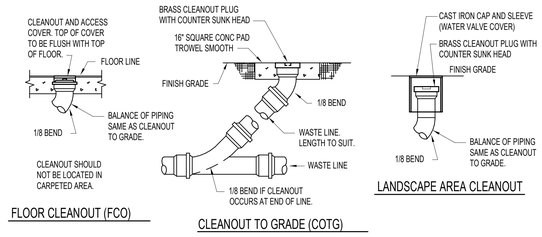

B CLEANOUT DETAILS
NO SCALE

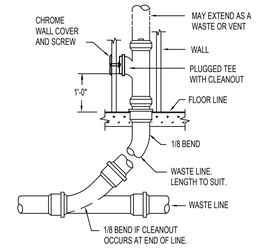

C WALL CLEANOUT DETAIL
NO SCALE

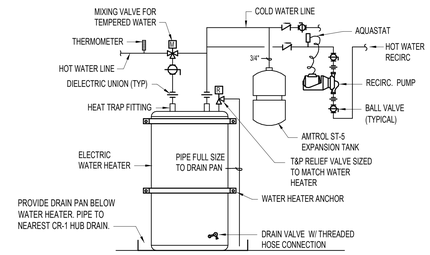

D WATER HEATER PIPING DETAIL
NO SCALE

E CONDENSATE DRAIN PIPE SUPPORT DETAIL
NO SCALE

F DX COIL CONDENSATE DRAIN DETAIL
NO SCALE

G GAS LINE CONNECTION DETAIL
NO SCALE

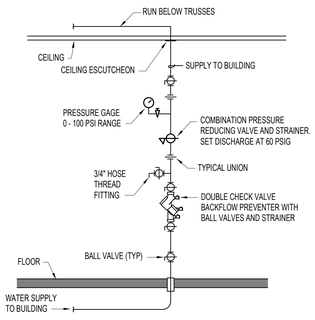

K VERTICAL WATER PRESSURE REDUCING STATION
NO SCALE

bhd ARCHITECTS
www.bhdarchitects.com
Phone 801.571.0010
Fax 801.571.0303
Toll Free 888.571.0010
65 East Wadsworth Park Drive
Suite 205 Draper, Utah 84020

PROFESSIONAL ENGINEER
DAVID L. HANSEN
Aug 15, 2024
STATE OF UTAH

Engineered Systems Associates
1355 EAST CENTER
POCATELLO, IDAHO 83201
PHONE: (208) 233-0501
FAX: (208) 233-0529
EMAIL esa@engsystems.com
ESA JOB NUMBER: 24065

THE CHURCH OF JESUS CHRIST OF LATTER-DAY SAINTS

Orem YSA 3rd 10 Ward Building
Orem UT YSA 3rd Stake
Approx. 1700 West 575 South
Vineyard, Utah 84059

Date: 15 AUG 2024
BHD #: 2344
County Parcel: 39:228:0001
Plan Series: 2024 10 Ward S/C
Owner #: 395-1816

Drawing Issue and Revision Schedule

#	Date	Description
1	15 Aug 2024	Bid Drawings

PLUMBING DETAILS

P501

Printed 8/14/2024 4:16:41 PM © 2022 BHD Architects This document and the ideas and designs incorporated herein, as an instrument of professional service, are the property of BHD Architects. (All rights reserved.) It is not to be used in any other project without written authorization of BHD Architects.

Printed 8/14/2024 4:16:42 PM © 2022 BHD Architects This document and the ideas and designs incorporated herein, as an instrument of professional service, are the property of BHD Architects, and may not be used in duplication of whole or in part for any other project without written authorization of BHD Architects.

GAS PIPING CALCULATIONS:

F 1A	110,000 BTU
F 1B	110,000 BTU
F 1C	110,000 BTU
F 1D	110,000 BTU
F 2A	110,000 BTU
F 2B	110,000 BTU
F 2C	110,000 BTU
F 2D	110,000 BTU
F 3A	110,000 BTU
F 3B	110,000 BTU
F 3C	110,000 BTU
F 3D	110,000 BTU
F 4	110,000 BTU
F 5	88,000 BTU
	1,518,000 BTU

F 6	88,000 BTU
F 7	88,000 BTU
F 8	88,000 BTU
F 9	88,000 BTU
F 10	88,000 BTU
F 11	120,000 BTU
F 12	88,000 BTU
F 13	88,000 BTU
F 14	88,000 BTU
F 15	88,000 BTU
F 16	88,000 BTU
F 17	88,000 BTU
F 18	88,000 BTU
	1,176,000 BTU

TOTAL BTU LOAD	2,694,000 BTU ACTUAL 2,750,000 DESIGN
BTU / 900 = CFH	3,056 CFH
TOTAL PIPE DESIGN LENGTH	600 FEET
LP GAS PIPE SIZE	2"
DISCHARGE PRESSURE	2 PSI

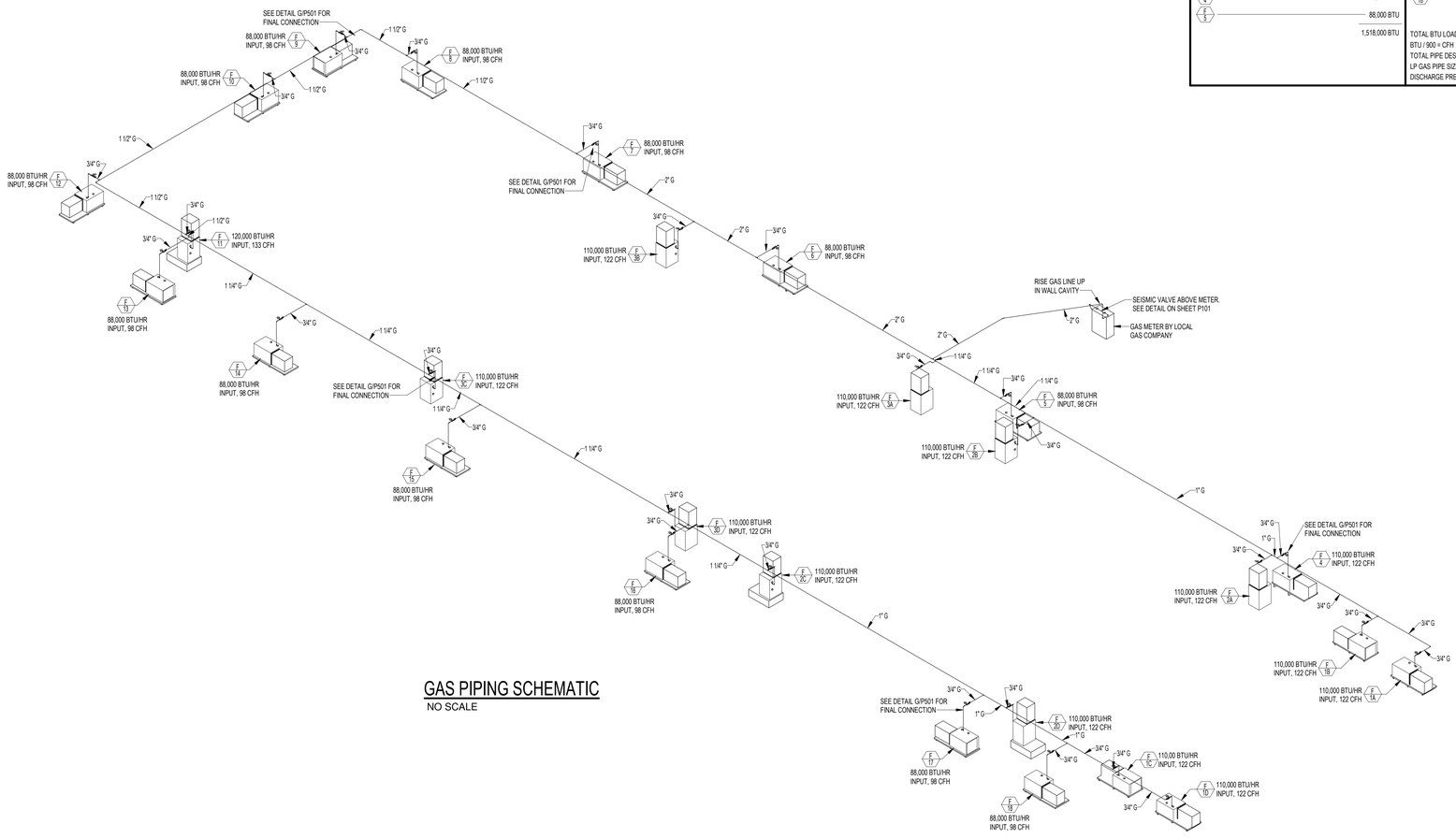

GAS PIPING SCHEMATIC

NO SCALE

bhd ARCHITECTS
www.bhdarchitects.com
Phone 801.571.0010
Fax 801.571.0303
Toll Free 888.571.0010
65 East Wadsworth Park Drive
Suite 205 Draper, Utah 84020

STATE OF UTAH PROFESSIONAL ENGINEER
DAVID L. HANSEN
Aug 15, 2024

ESA Engineered Systems Associates
1355 EAST CENTER
POCATELLO, IDAHO 83201
PHONE: (208) 233-0501
FAX: (208) 233-0529
EMAILesa@engsystems.com
ESA JOB NUMBER: 24065

THE CHURCH OF JESUS CHRIST OF LATTER-DAY SAINTS

Orem YSA 3rd 10 Ward Building
Orem UT YSA 3rd Stake
Approx. 1700 West 575 South
Vineyard, Utah 84059

Date: 15 AUG 2024
BHD #: 2344
County Parcel: 39:228:0001
Plan Series: 2024 10 Ward SC
Owner #: 390-187a

Drawing Issue and Revision Schedule

#	Date	Description
1	15 Aug 2024	Bid Drawings

GAS PIPING CALCULATION AND SCHEMATIC

P601

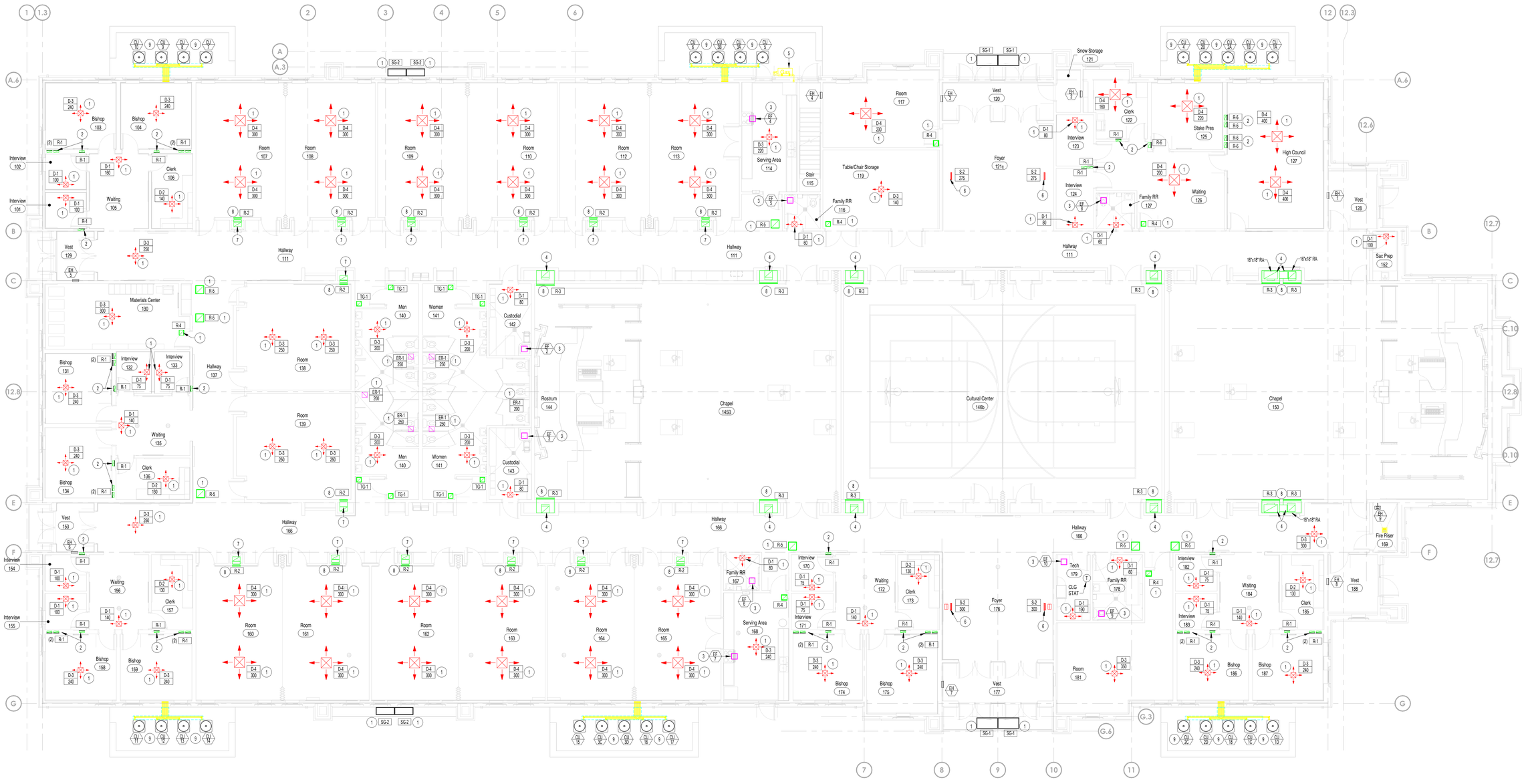

MECHANICAL FLOOR PLAN

SCALE: 1/8" = 1'-0"

LEGEND

SYMBOL	DESCRIPTION	SYMBOL	DESCRIPTION
	BRANCH DUCT TAKEOFF	SA	SUPPLY AIR
		RA	RETURN AIR
	SINGLE THICKNESS TURNING VANES	OA	OUTSIDE AIR
		EA	EXHAUST AIR
		REFR.	REFRIGERANT
	DUCT TRANSITION	AFF	ABOVE FINISHED FLOOR
		L	LIQUID REFRIGERANT PIPING
	MOTORIZED DAMPER	S	SUCTION REFRIGERANT PIPING
	BACK DRAFT DAMPER		FLEX. CONNECTION 6'-0" MAX LENGTH
	MANUAL VOLUME DAMPER (USE CONCEALED OPERATORS IN DAMPERS INSTALLED OVER SUSPENDED CEILINGS)		DUCT SMOKE DETECTOR

DESIGN CONDITIONS	OUTSIDE	INSIDE
WINTER	-20°F	70°F
SUMMER	95°F db, 63°F wb	75°F db, 64°F wb

OREM, UTAH ELEVATION 4774 FT.

PLAN NOTES:

1. REFER TO SHEET M102 FOR CONTINUATION OF DUCTWORK ABOVE CEILING. TYPICAL OF ALL DUCTWORK ABOVE CEILINGS.
2. DROP 12"x3 1/2" OR 12"x5 1/2" UN-LINED RETURN AIR DUCT (AS CALLED OUT) DOWN IN WALL CAVITY TO RETURN GRILLE LOCATED AT 6" ABOVE FLOOR. CONNECT GRILLE TO DUCT RISER. COORDINATE DUCT RISER WITH ELECTRICAL CONDUITS AND OTHER DEVICES. REFER TO SHEET M102 FOR CONTINUATION.
3. INSTALL CEILING MOUNTED EXHAUST FAN AS SCHEDULED. COORDINATE LOCATION AND PLACE FAN BETWEEN CEILING JOISTS AND BELOW MECHANICAL EQUIPMENT PLATFORM FLOOR. CONNECT 6" ROUND DUCT TO FAN AND RUN ABOVE CEILINGS. COORDINATE FAN LOCATION WITH LIGHT FIXTURES AND OTHER DUCTWORK. REFER TO SHEET M102 FOR DUCTWORK ABOVE CEILINGS. REFER TO DETAIL H/M503 FOR TYPICAL FAN INSTALLATION.
4. PROVIDE PLENUM DUCT BEHIND WALL MOUNTED RETURN GRILLE. PLENUM TO BE FULL SIZE AS CORRESPONDING GRILLE. CONNECT 18"x16" RETURN AIR DUCT TO TOP OF PLENUM AND RISE UP IN CHASE. REFER TO SHEET M102 FOR CONNECTION TO CORRESPONDING FURNACE SYSTEM ON EQUIPMENT PLATFORM ABOVE.
5. LOCATE GAS METER INSIDE MECHANICAL ENCLOSURE AND COORDINATE WITH MECHANICAL UNITS. PROVIDE 3'-0" MINIMUM CLEARANCE BETWEEN GAS METER AND ANY CONDENSING UNITS.
6. MOUNT SIDEWALL SUPPLY REGISTER HIGH ON THE WALL NEAR CEILING. REFER TO ARCHITECTURAL ELEVATION PLANS FOR EXACT PLACEMENT.
7. ATTACH 18x10 RETURN DUCT TO RETURN GRILLE NEAR FLOOR. RISE DUCT UP IN CHASE. REFER TO SHEET M102 FOR CONNECTION TO CORRESPONDING FURNACE SYSTEM ON EQUIPMENT PLATFORM ABOVE.
8. MOUNT RETURN AIR GRILLE AT 8" ABOVE THE FLOOR. COORDINATE GRILLE LOCATION WITH CHASE AND WITH ELECTRICAL DEVICES.
9. PROVIDE 2'-0" MINIMUM CLEARANCES ALL AROUND CONDENSING UNITS. PROVIDE 30" MINIMUM CLEARANCE AT SERVICE SIDE. REFER TO SHEET M501 FOR TYPICAL REFRIGERANT PIPING SCHEMATIC AND DETAILS.

GENERAL NOTES:

- A- DRAWINGS SHOW GENERAL ARRANGEMENTS OF PIPING, DUCTWORK, EQUIPMENT, ETC. FOLLOW AS CLOSELY AS ACTUAL BUILDING CONSTRUCTION AND WORK OF OTHER TRADES WILL PERMIT. BECAUSE OF THE SMALL SCALE OF THE DRAWINGS, IT IS NOT POSSIBLE TO INDICATE ALL OFFSETS, FITTINGS, AND ACCESSORIES THAT MAY BE REQUIRED. INVESTIGATE STRUCTURAL AND FINISH CONDITIONS AFFECTING THIS WORK AND ARRANGE WORK ACCORDINGLY. PROVIDE SUCH FITTINGS, VALVES, AND ACCESSORIES REQUIRED TO MEET CONDITIONS AND PROVIDE COMPLETE WORKING SYSTEM.
- B- ALL DUCT DIMENSIONS ARE CLEAR DIMENSIONS INSIDE DUCT LINER.
- C- DO NOT USE DUCT LINER INSIDE RETURN AIR DUCT RISERS IN 2"x6" WALLS OF PERIMETER ROOMS. COORDINATE SUCH RISERS WITH ELECTRIC CONDUITS AND DEVICES.
- D- WRAP ALL OUTSIDE AIR DUCT WITH EXTERNAL INSULATION.
- E- SEE ARCHITECTURAL REFLECTED CEILING PLAN FOR EXACT LOCATION OF GRILLES AND DIFFUSERS.
- F- ALL PVC EQUIPMENT, VENTS, PLUMBING VENTS, AND PENTHOUSE EXHAUST VENTS SHALL BE PAINTED TO MATCH ROOF COLOR.
- G- DO NOT ROUTE PIPES ABOVE ELECTRICAL PANELS 4'-0" DEEP AND 6'-6" HIGH.
- H- SEE SHEET M102 FOR CONTINUATION OF ALL DUCT RISERS AND DUCTWORK ABOVE CEILINGS.
- J- COORDINATE EQUIPMENT AND DUCTWORK WITH NATURAL GAS, AND WATER PIPING. REFER TO SHEET P102 FOR PIPING LOCATIONS.

bhd ARCHITECTS
www.bhdarchitects.com
Phone 801.571.0010
Fax 801.571.0303
Toll Free 888.571.0010
65 East Wadsworth Park Drive
Suite 205 Draper, Utah 84020

PROFESSIONAL ENGINEER — DAVID L. HANSEN — Aug 15, 2024 — STATE OF UTAH

Engineered Systems Associates
1355 EAST CENTER
POCATELLO, IDAHO 83201
PHONE: (208) 233-0501
FAX: (208) 233-0529
EMAIL:esa@engsystems.com
ESA JOB NUMBER: 24065

THE CHURCH OF JESUS CHRIST OF LATTER-DAY SAINTS

Orem YSA 3rd 10 Ward Building
Orem UT YSA 3rd Stake
Approx. 1700 West 575 South
Vineyard, Utah 84059

Date: 15 AUG 2024 | BID #: 2344 | County Parcel: 39:228:0001 | Plan Series: 2024 10 Ward SC | Owner #: 390-187-6

Drawing Issue and Revision Schedule

#	Date	Description
1	15 Aug 2024	Bid Drawings

MECHANICAL FLOOR PLAN

M101

Printed 8/14/2024 4:14:47 PM © 2022 BHD Architects This document and the ideas and designs incorporated herein, as an instrument of professional service, are the property of BHD Architects, and may not be used or published in whole or in part for any other project without written authorization of BHD Architects.

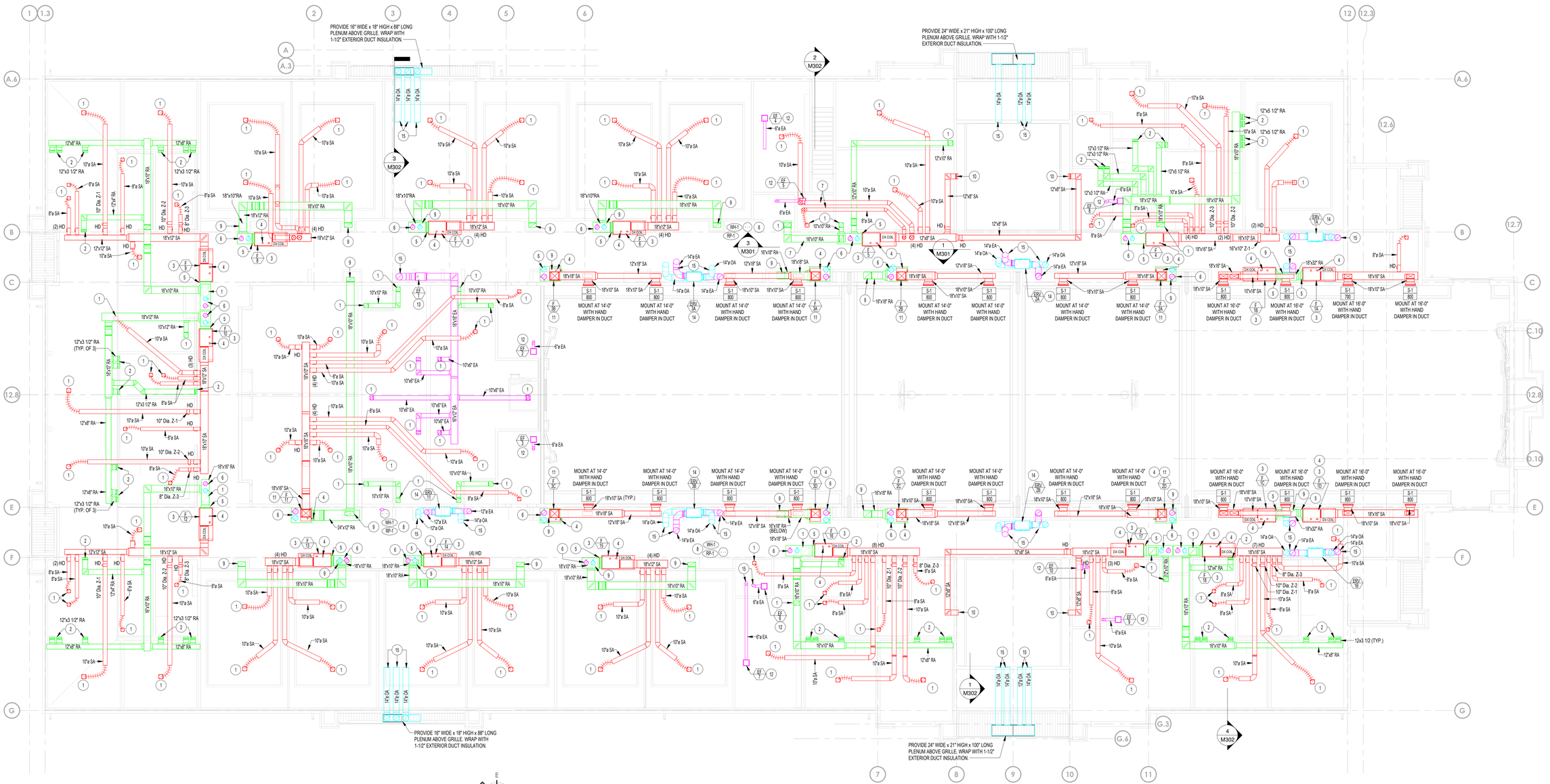

EQUIPMENT PLATFORM MECHANICAL PLAN

SCALE: 1/8" = 1'-0"

PLAN NOTES:

1. REFER TO SHEET M101 FOR DUCT CONTINUATION TO SUPPLY OR RETURN AIR GRILLES BELOW. NO MORE THAT 36" OF FLEX DUCT PERMITTED ON ANY CEILING GRILLE OR REGISTER..
2. DROP 12" UN-LINED RETURN AIR DUCT DOWN IN WALL CAVITY TO RETURN GRILLE LOCATED AT 6" ABOVE FLOOR. COORDINATE DUCT RISER WITH ELECTRICAL CONDUITS AND OTHER DEVICES.
3. HORIZONTAL FURNACE WITH DX COOLING COIL. SUPPORT EQUIPMENT FROM PLATFORM OR FROM ROOF SUPPORTS AT EACH CORNER. PROVIDE DRAIN PAN BELOW UNITS AND COIL. REFER TO DETAIL D/M502 FOR TYPICAL INSTALLATION, AND DUCT AND PIPING CONNECTIONS.
4. RISE (2) 3" ROUND FURNACE VENTS UP THRU ROOF WITH CONCENTRIC TYPE FITTING. REFER TO DETAILS F/M501 AND D/M502. DO NOT BLOCK FURNACE ACCESS WITH VENTS. TYPICAL FOR ALL FURNACE SYSTEMS. LOCATE VENTS ALIGNED ALONG BUILDING AXIS AND AWAY FROM ROOF PEAKS AND VALLEYS.
5. REFER TO DETAIL G/M502 FOR EXTERNAL FILTER SECTION. TYPICAL OF ALL HORIZONTAL FURNACE SYSTEMS. MIXED AIR PLENUM AT INLET TO FURNACE SYSTEM TO BE FULL SIZED OF FURNACE OPENING UNLESS NOTED OTHERWISE. TYPICAL OF ALL SYSTEMS.
6. CONNECT ROUND OUTSIDE AIR DUCT AND RELIEF AIR DUCT TO MIXED AIR PLENUM DUCT. PROVIDE MOTORIZED DAMPER, DUCT ACCESS DOOR AND MANUAL BALANCING DAMPER IN EACH DUCT. SEE FURNACE SCHEDULE ON SHEET M601 FOR MAXIMUM CFM AMOUNTS OF OUTSIDE AIR/RELIEF AIR REQUIRED AT EACH FURNACE SYSTEM.
7. RISE ALL DUCTWORK UP TO A MINIMUM OF 7'-0" ABOVE STAIRWAY AND PLATFORM ACCESS. REFER TO SECTION 2/M302.
8. WATER HEATER WITH RECIRCULAION PUMP. REFER TO PLUMBING DRAWINGS. COORDINATE WITH DUCTWORK AND EQUIPMENT.
9. DROP RETURN DUCT DOWN IN CHASE. REFER TO SHEET M101 FOR DUCT SIZE AND CONNECTION OF DUCTWORK TO GRILLE NEAR FLOOR.
10. MOUNT SIDEWALL SUPPLY REGISTER HIGH ON THE WALL NEAR CEILING. REFER TO ARCHITECTURAL ELEVATION PLANS FOR EXACT PLACEMENT. REFER TO SHEET M101 FOR CFM REQUIRED.
11. VERTICAL FURNACE WITH DX COOLING COIL. MOUNT ON 14" HIGH RETURN AIR PLENUM BASE AND SUPPORT EQUIPMENT FROM EQUIPMENT PLATFORM. PROVIDE PROVIDE CONDENSATE SWITCH WITH EACH UNIT. PROVIDE HORIZONTAL FILTER SECTION BETWEEN FURNACE AND PLENUM. REFER TO DETAIL F/M503 FOR TYPICAL INSTALLATION, AND DUCT CONNECTION.
12. 6" ROUND EXHAUST DUCT FROM CEILING MOUNTED FAN. RISE EXHAUST DUCT UP AS HIGH AS POSSIBLE AND CONNECT TO PENTHOUSE AS SHOWN. PROVIDE BACK-DRAFT DAMPER IN DUCT. SEE DETAIL H/M503 FOR TYPICAL FAN AND DUCT INSTALLATION. REFER TO SHEET M103 FOR CONTINUATION OF DUCTWORK AND CONNECTION TO ROOF MOUNTED PENTHOUSES.
13. MOUNT IN-LINE EXHAUST FAN ON EQUIPMENT PLATFORM WITH VIBRATION ISOLATORS UNDER EACH CORNER. CONNECT FAN TO EXHAUST GRILLES IN TOILET ROOM CEILINGS AND TO PENTHOUSE ON ROOF AS SHOWN. FAN TO BE CONTROLLED WITH LIGHTS LOCATED IN MENS AND/OR WOMENS TOILET ROOMS.
14. INSTALL ERV UNIT ON EQUIPMENT PLATFORM OR FROM ROOF STRUCTURE. PROVIDE VIBRATION ISOLATORS AT EACH SUPPORT POINT. REFER TO ERV SCHEDULE ON SHEET M601 FOR ORIENTATION OF UNITS. CONNECT ERV UNIT TO OUTSIDE AIR DUCT FROM EXTERIOR OF BUILDING, OUTSIDE AIR DUCT(S) TO EACH FURNACE SYSTEM. RELIEF AIR DUCT(S) FROM EACH FURNACE SYSTEM, AND TO EXHAUST AIR DUCTS UP TO PENTHOUSE. REFER TO SECTIONS ON SHEET M301 FOR TYPICAL DUCT CONNECTIONS. COORDINATE WITH ALL OTHER DUCTS AND PIPING.
15. REFER TO SHEET M103 FOR CONTINUATION OF DUCTWORK ABOVE MECHANICAL PLATFORM.

GENERAL NOTES:

A- DRAWINGS SHOW GENERAL ARRANGEMENTS OF PIPING, DUCTWORK, EQUIPMENT, ETC. FOLLOW AS CLOSELY AS ACTUAL BUILDING CONSTRUCTION AND WORK OF OTHER TRADES WILL PERMIT. BECAUSE OF THE SMALL SCALE OF THE DRAWINGS, IT IS NOT POSSIBLE TO INDICATE ALL OFFSETS, FITTINGS, AND ACCESSORIES THAT MAY BE REQUIRED. INVESTIGATE STRUCTURAL AND FINISH CONDITIONS AFFECTING THIS WORK AND ARRANGE WORK ACCORDINGLY. PROVIDE SUCH FITTINGS, VALVES, AND ACCESSORIES REQUIRED TO MEET CONDITIONS AND PROVIDE COMPLETE WORKING SYSTEM.

B- ALL DUCT DIMENSIONS ARE CLEAR DIMENSIONS INSIDE DUCT LINER.

C- DO NOT USE DUCT LINER INSIDE RETURN AIR DUCT RISERS IN 2"x6" WALLS OF PERIMETER ROOMS. COORDINATE SUCH RISERS WITH ELECTRIC CONDUITS AND DEVICES.

D- WRAP ALL OUTSIDE AIR DUCT WITH EXTERNAL INSULATION.

E- SEE ARCHITECTURAL REFLECTED CEILING PLAN FOR EXACT LOCATION OF GRILLES AND DIFFUSERS.

F- ALL PVC EQUIPMENT, VENTS, PLUMBING VENTS, AND PENTHOUSE EXHAUST VENTS SHALL BE PAINTED TO MATCH ROOF COLOR.

G- DO NOT ROUTE PIPES ABOVE ELECTRICAL PANELS 4'-0" DEEP AND 6'-6" HIGH.

H- SEE SHEET M101 FOR CONTINUATION OF ALL DUCT RISERS CEILING DIFFUSERS BELOW

J- COORDINATE EQUIPMENT AND DUCTWORK WITH NATURAL GAS, AND WATER PIPING. REFER TO SHEET P102 FOR PIPING LOCATIONS.

K- MOUNT ALL DUCT SMOKE DETECTORS IN RETURN AIR STREAM ONLY. DO NOT MOUNT DOWN STREAM OF MINIMUM OUTSIDE AIR CONNECTION.

bhd ARCHITECTS
www.bhdarchitects.com
Phone 801.571.0010
Fax 801.571.0303
Toll Free 888.571.0010
65 East Wadsworth Park Drive
Suite 205 Draper, Utah 84020

PROFESSIONAL ENGINEER
DAVID L. HANSEN
Aug 15, 2024
STATE OF UTAH

ESA Engineered Systems Associates
1355 EAST CENTER
POCATELLO, IDAHO 83201
PHONE: (208) 233-0501
FAX: (208) 233-0529
EMAIL:esa@engsystems.com
ESA JOB NUMBER: 24065

THE CHURCH OF JESUS CHRIST OF LATTER-DAY SAINTS

Orem YSA 3rd 10 Ward Building
Orem UT YSA 3rd Stake
Approx. 1700 West 575 South
Vineyard, Utah 84059

Date: 15 AUG 2024 | BHD #: 2344 | County Parcel: 59-226-0001 | Plan Series: 2024 10 Ward SC | Owner #: 590-1816

Drawing Issue and Revision Schedule

#	Description	Date
1	15 Aug 2024 Bid Drawings	

EQUIPMENT PLATFORM MECHANICAL PLAN

M102

© 2022 BHD Architects This document and the ideas and designs incorporated herein, as an instrument of professional service, are the property of BHD Architects. All rights reserved. This document may not be used or duplicated in whole or in part for any other project without written authorization of BHD Architects.

Printed 8/14/2024 4:14:55 PM

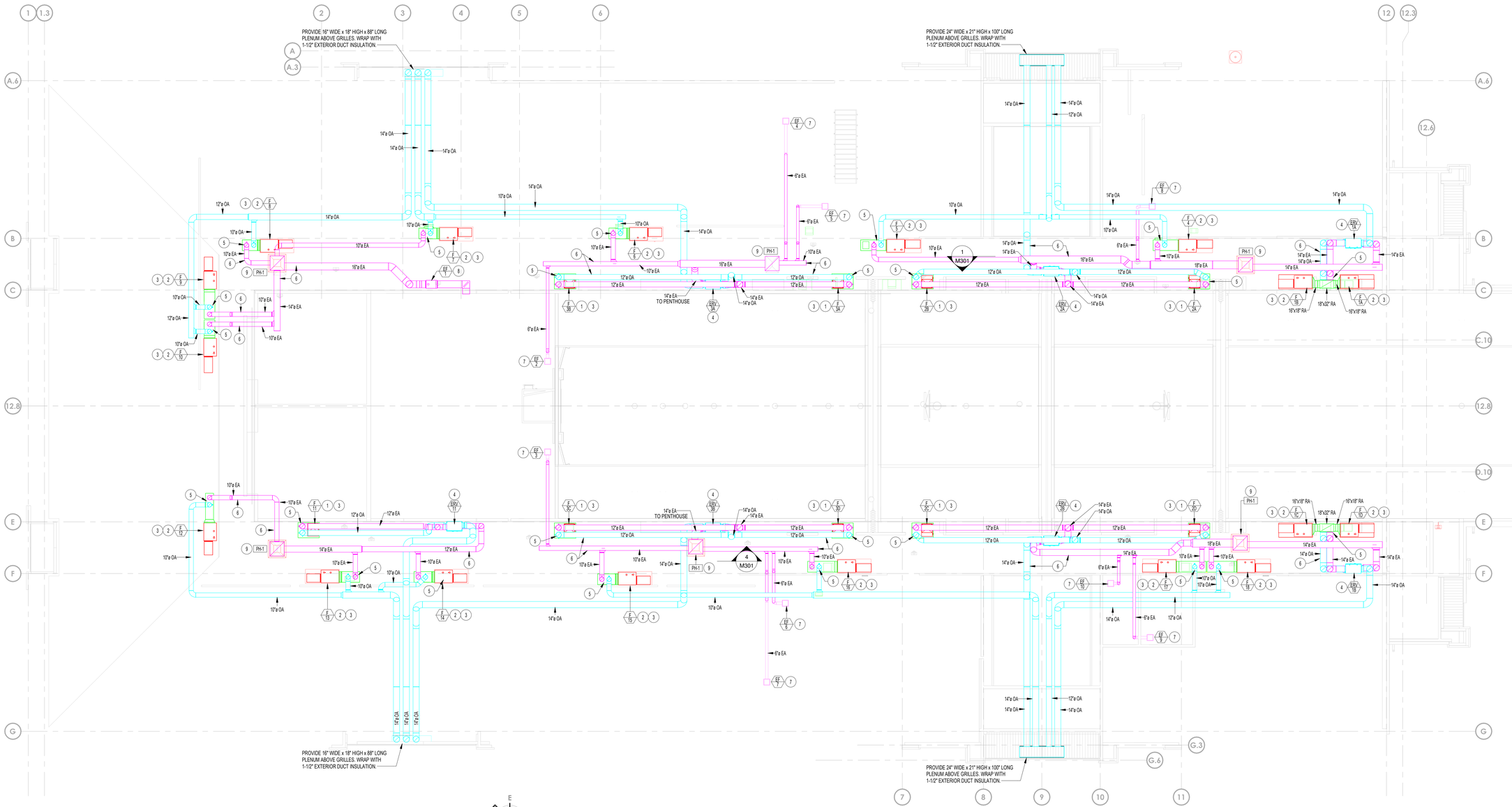

UPPER EQUIPMENT PLATFORM MECHANICAL PLAN

SCALE: 1/4" = 1'-0"

PLAN NOTES:

1. VERTICAL FURNACE WITH DX COOLING COIL. MOUNT ON 14" HIGH RETURN AIR PLENUM BASE AND SUPPORT EQUIPMENT FROM EQUIPMENT PLATFORM. PROVIDE CONDENSATE SENSOR AT EACH UNIT. REFER TO DETAIL F/M503 FOR TYPICAL INSTALLATION, AND DUCT CONNECTION. RISE SUPPLY PLENUM UP AND CONNECT (2) 18x10 SA DUCT AS SHOWN.
2. HORIZONTAL FURNACE WITH DX COOLING COIL. SUPPORT EQUIPMENT FROM ROOF STRUCTURE. PROVIDE CONDENSATE SENSOR AT EACH UNIT. REFER TO DETAIL F/M503 FOR TYPICAL INSTALLATION, AND DUCT CONNECTION. RISE SUPPLY PLENUM UP AND CONNECT (2) 18x10 SA DUCT AS SHOWN.
3. RISE (2) 3" ROUND FURNACE VENTS UP THRU ROOF WITH CONCENTRIC TYPE FITTING. REFER TO DETAILS F/M501 AND DM502. DO NOT BLOCK FURNACE ACCESS WITH VENTS. TYPICAL FOR ALL FURNACE SYSTEMS. LOCATE VENTS ALIGNED ALONG BUILDING AXIS AND AWAY FROM ROOF PEAKS AND VALLEYS.
4. INSTALL ERV UNIT ON EQUIPMENT PLATFORM OR FROM ROOF STRUCTURE WITH VIBRATION ISOLATORS UNDER EACH SUPPORT. CONNECT ERV UNIT TO OUTSIDE AIR DUCT FROM EXTERIOR OF BUILDING, OUTSIDE AIR DUCT(S) TO EACH FURNACE SYSTEM, RELIEF AIR DUCT(S) FROM EACH FURNACE SYSTEM, AND TO EXHAUST AIR DUCTS UP TO PENTHOUSE. REFER TO SECTIONS ON SHEET M301 FOR TYPICAL DUCT CONNECTIONS. COORDINATE WITH ALL OTHER DUCTWORK AND PIPING.
5. CONNECT OUTSIDE AIR DUCT AND RELIEF AIR DUCT TO MIXED AIR PLENUM DUCT AT EACH FURNACE SYSTEM. REFER TO SHEET M102 FOR LOCATION OF HORIZONTAL FURNACES ON EQUIPMENT PLATFORM. PROVIDE MOTORIZED DAMPER, DUCT ACCESS DOOR AND MANUAL BALANCING DAMPER IN EACH DUCT. REFER TO MECHANICAL SECTIONS ON SHEET M301 FOR DUCT SIZES AT EACH FURNACE SYSTEM. SEE FURNACE SCHEDULE ON SHEET M601 FOR MAXIMUM CFM AMOUNTS OF OUTSIDE AIR/RELIEF AIR REQUIRED AT EACH FURNACE SYSTEM.
6. RISE ALL DUCTWORK UP TO ABOVE 7'-0" (MINIMUM) TO CROSS OVER EQUIPMENT PLATFORM. FIELD VERIFY ROUTING OF DUCTWORK TO MAINTAIN FREE ACCESS TO ALL EQUIPMENT, DAMPERS AND CONTROLS.
7. 6" ROUND EXHAUST DUCT FROM CEILING MOUNTED FAN. RISE EXHAUST DUCT UP AND CONNECT TO EXHAUST AIR DUCT AS SHOWN TO VENT THRU ROOF MOUNTED PENTHOUSE. PROVIDE BACK-DRAFT DAMPER AT FAN LOCATION.
8. RISE UP 16" ROUND EXHAUST DUCT FROM IN-LINE EXHAUST FAN ON EQUIPMENT PLATFORM. PROVIDE BACK-DRAFT DAMPER IN DUCT NEAR FAN. CONNECT TO EXHAUST DUCT AS SHOWN TO VENT THRU PENTHOUSE ON ROOF.
10. MOUNT PENTHOUSE ON SLOPED ROOF WITH SLOPING ROOF CURB. DROP 18x18 DUCT DOWN THRU ROOF AND EXPAND TO 24x18 EXHAUST PLENUM. CONNECT EXHAUST DUCTS TO PLENUM AS SHOWN. COORDINATE PENTHOUSE LOCATION WITH ROOF JOISTS AND KEEP AS HIGH AS POSSIBLE TO RIDGE LINE.

GENERAL NOTES:

- A- DRAWINGS SHOW GENERAL ARRANGEMENTS OF PIPING, DUCTWORK, EQUIPMENT, ETC. FOLLOW AS CLOSELY AS ACTUAL BUILDING CONSTRUCTION AND WORK OF OTHER TRADES WILL PERMIT. BECAUSE OF THE SMALL SCALE OF THE DRAWINGS, IT IS NOT POSSIBLE TO INDICATE ALL OFFSETS, FITTINGS, AND ACCESSORIES THAT MAY BE REQUIRED. INVESTIGATE STRUCTURAL AND FINISH CONDITIONS AFFECTING THIS WORK AND ARRANGE WORK ACCORDINGLY. PROVIDE SUCH FITTINGS, VALVES, AND ACCESSORIES REQUIRED TO MEET CONDITIONS AND PROVIDE COMPLETE WORKING SYSTEM.
- B- ALL DUCT DIMENSIONS ARE CLEAR DIMENSIONS INSIDE DUCT LINER.
- C- DO NOT USE DUCT LINER INSIDE RETURN AIR DUCT RISERS IN 2"x6" WALLS OF PERIMETER ROOMS. COORDINATE SUCH RISERS WITH ELECTRIC CONDUITS AND DEVICES.
- D- WRAP ALL OUTSIDE AIR DUCT WITH EXTERNAL INSULATION.
- E- SEE ARCHITECTURAL REFLECTED CEILING PLAN FOR EXACT LOCATION OF GRILLES AND DIFFUSERS.
- F- ALL PVC EQUIPMENT, VENTS, PLUMBING VENTS, AND PENTHOUSE EXHAUST VENTS SHALL BE PAINTED TO MATCH ROOF COLOR.
- G- DO NOT ROUTE PIPES ABOVE ELECTRICAL PANELS 4'-0" DEEP AND 6'-6" HIGH.
- H- SEE SHEET M101 FOR CONTINUATION OF ALL DUCT RISERS CEILING DIFFUSERS BELOW
- J- COORDINATE EQUIPMENT AND DUCTWORK WITH NATURAL GAS, AND WATER PIPING. REFER TO SHEET P102 FOR PIPING LOCATIONS.
- K- MOUNT ALL DUCT SMOKE DETECTORS IN RETURN AIR STREAM ONLY. DO NOT MOUNT DOWN STREAM OF MINIMUM OUTSIDE AIR CONNECTION.

bhd ARCHITECTS
www.bhdarchitects.com
Phone 801.571.0010
Fax 801.571.0303
Toll Free 888.571.0010
65 East Wadsworth Park Drive
Suite 205 Draper, Utah 84020

LICENSED PROFESSIONAL ENGINEER — DAVID L. HANSEN — Aug 15, 2024 — STATE OF UTAH

ESA Engineered Systems Associates
1355 EAST CENTER
POCATELLO, IDAHO 83201
PHONE: (208) 233-0501
FAX: (208) 233-0529
EMAIL:esa@engsystems.com
ESA JOB NUMBER: 24065

THE CHURCH OF JESUS CHRIST OF LATTER-DAY SAINTS

Orem YSA 3rd 10 Ward Building
Orem UT YSA 3rd Stake
Approx. 1700 West 575 South
Vineyard, Utah 84059

Owner #: 590-18-6
Plan Series: 2024 10 Ward SC
County Parcel: 59:226:0001
BHD #: 2344
Date: 15 AUG 2024

Drawing Issue and Revision Schedule

#	Description	Date
1	Bid Drawings	15 Aug 2024

UPPER EQUIPMENT PLATFORM MECHANICAL PLAN

M103

Printed 8/14/2024 4:14:59 PM © 2022 BHD Architects This document and the ideas and designs incorporated herein, as an instrument of professional service, are the property of BHD Architects, and may not be used or disclosed in whole or in part for any other project without written authorization of BHD Architects.

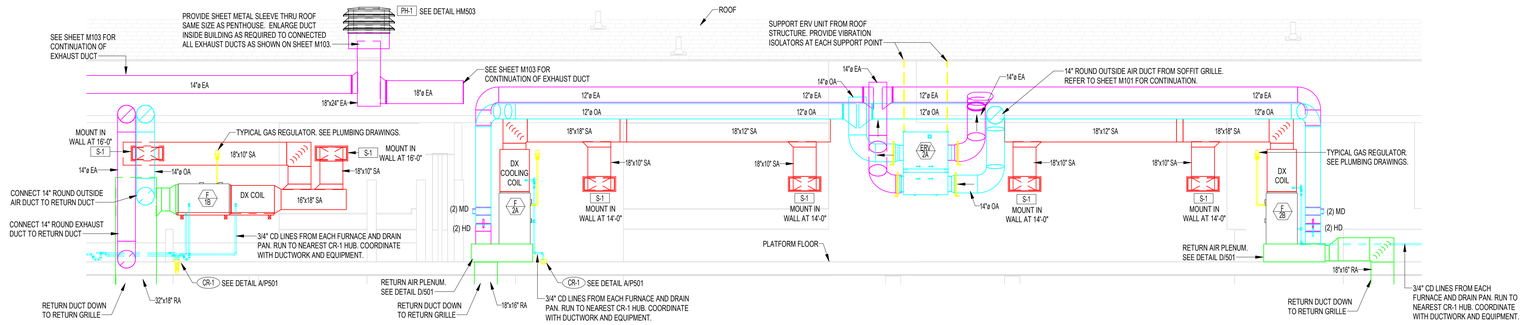

1 M301 **MECHANICAL SECTION**
SCALE: 1/4" = 1'-0"

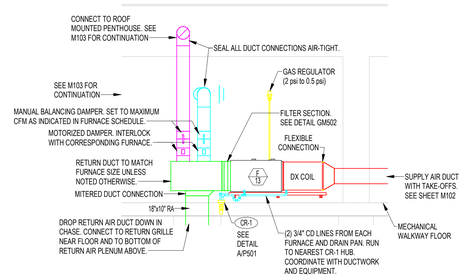

2 M301 **MECHANICAL SECTION**
SCALE: 1/4" = 1'-0"

3 M301 **MECHANICAL SECTION**
SCALE: 1/4" = 1'-0"

4 M301 **MECHANICAL SECTION**
SCALE: 1/4" = 1'-0"

bhd ARCHITECTS
www.bhdarchitects.com
Phone 801.571.0010
Fax 801.571.0303
Toll Free 888.571.0010
65 East Wadsworth Park Drive
Suite 205 Draper, Utah 84020

STATE OF UTAH — PROFESSIONAL ENGINEER — DAVID L. HANSEN — Aug 15, 2024

ESA Engineered Systems Associates
1355 EAST CENTER
POCATELLO, IDAHO 83201
PHONE: (208) 233-0501
FAX: (208) 233-0529
EMAIL:esa@engsystems.com
ESA JOB NUMBER: 24065

THE CHURCH OF JESUS CHRIST OF LATTER-DAY SAINTS

Orem YSA 3rd 10 Ward Building
Orem UT YSA 3rd Stake
Approx. 1700 West 575 South
Vineyard, Utah 84059

Date: 15 AUG 2024 | BHD #: 2344 | County Parcel: 39:228:0001 | Plan Series: 2024 10 Ward SC | Owner #: 590-1876

Drawing Issue and Revision Schedule

No.	Description	Date
1	Bid Drawings	15 Aug 2024

MECHANICAL SECTION

M301

© 2022 BHD Architects The document and the ideas and designs incorporated herein, as an instrument of professional service, are the property of BHD Architects, and may not be used in duplication in whole or in part for any other project without written authorization of BHD Architects.

Printed 8/14/2024 4:15:03 PM

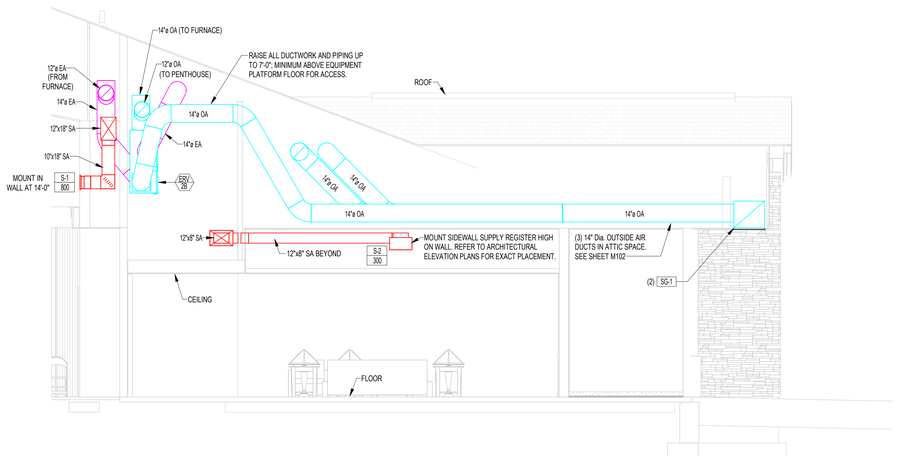

1 M302 MECHANICAL SECTION
SCALE: 1/4" = 1'-0"

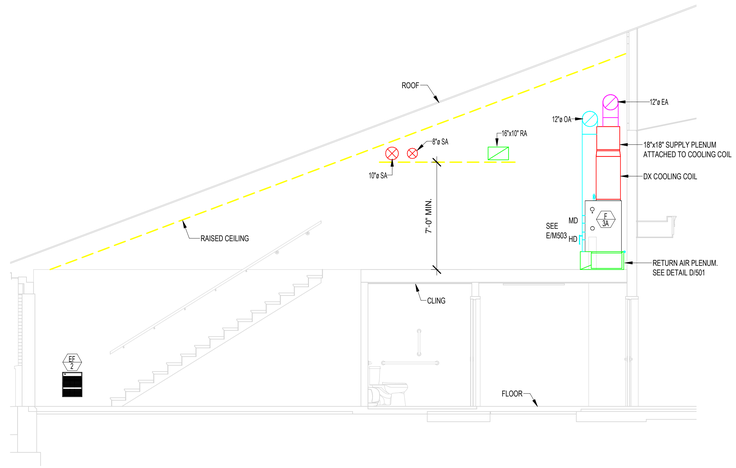

2 M302 MECHANICAL SECTION
SCALE: 1/4" = 1'-0"

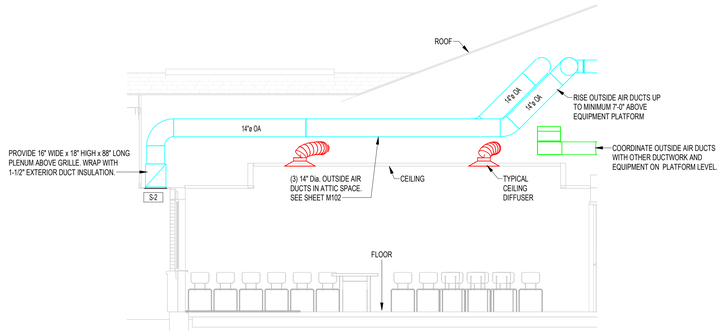

3 M302 MECHANICAL SECTION
SCALE: 1/4" = 1'-0"

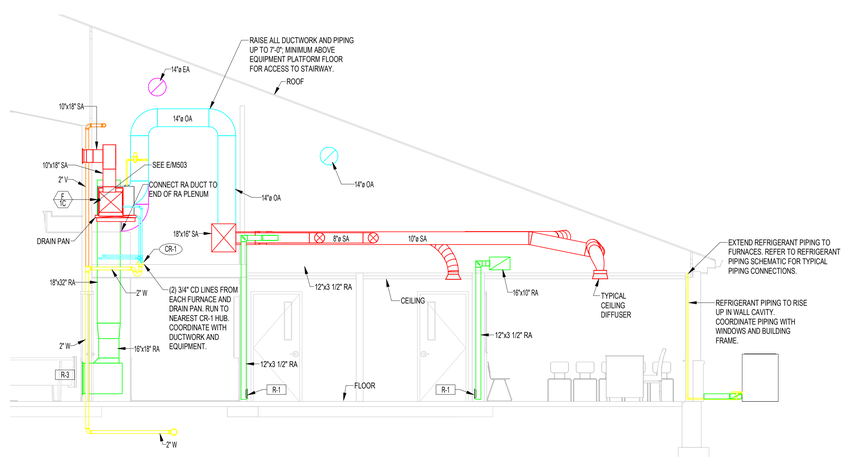

4 M302 MECHANICAL SECTION
SCALE: 1/4" = 1'-0"

Printed 8/14/2024 4:15:05 PM © 2022 BHD Architects The document and the ideas and designs incorporated herein, as an instrument of professional service, are the property of BHD Architects, and may not be used in duplication in whole or in part for any other project without written authorization of BHD Architects.

bhd ARCHITECTS
www.bhdarchitects.com
Phone 801.571.0010
Fax 801.571.0303
Toll Free 888.571.0010
65 East Wadsworth Park Drive
Suite 205 Draper, Utah 84020



Engineered Systems Associates
1355 EAST CENTER
POCATELLO, IDAHO 83201
PHONE: (208) 233-0501
FAX: (208) 233-0529
EMAIL esa@engsystems.com
ESA JOB NUMBER: 24065

THE CHURCH OF JESUS CHRIST OF LATTER-DAY SAINTS

Orem YSA 3rd 10 Ward Building
Orem UT YSA 3rd Stake
Approx. 1700 West 575 South
Vineyard, Utah 84059

Date: 15 AUG 2024
BHD #: 2344
County Parcel: 39-228-0001
Plan Series: 2024 10 Ward SC
Owner #: 590-18Y-s

Drawing Issue and Revision Schedule

#	Description	Date
1	Issued for Permit	15 Aug 2024
2	Bid Drawings	

MECHANICAL SECTIONS

M302

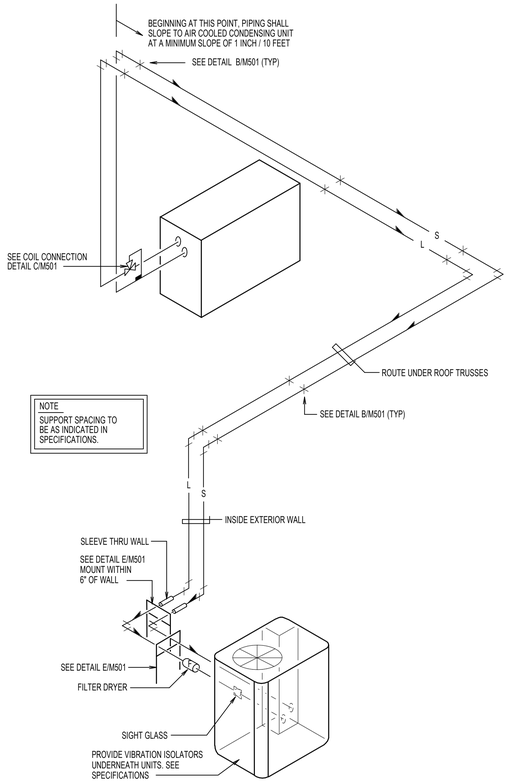

A TYPICAL REFRIGERANT SCHEME

SCALE: NONE

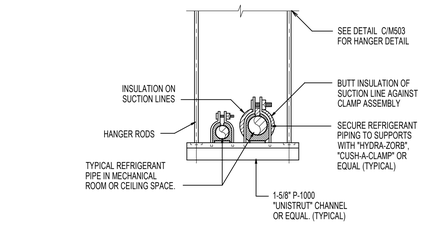

B SUSPENDED REFRIGERANT PIPE SUPPORT AT CEILING

SCALE: NONE

REFRIGERANT PIPING LEGEND	
SYMBOL	DESCRIPTION
	EXPANSION VALVE. SEE DETAIL C/M501
	MOISTURE INDICATING SIGHT GLASS
	FLEXIBLE CONNECTION
F	FILTER DRIER
	PIPE SUPPORT. SEE DETAILS B/M501 D/M501
	EXTERIOR PIPE SUPPORT. SEE DETAIL E/M501
	TRAP. ONE PIECE FACTORY FABRICATED
	DIRECTION OF SLOPE DOWN
S	SUCTION LINE
L	LIQUID LINE

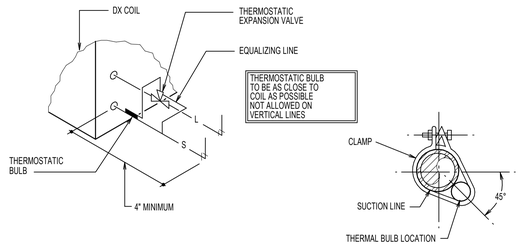

C REFRIGERANT COIL CONNECTION DETAIL

SCALE: NONE

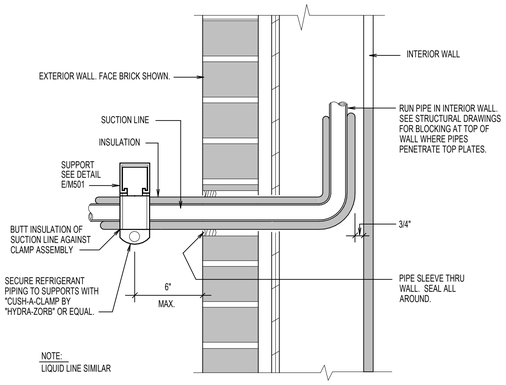

D REFRIGERANT PIPE SUPPORT AT WALL

SCALE: NONE

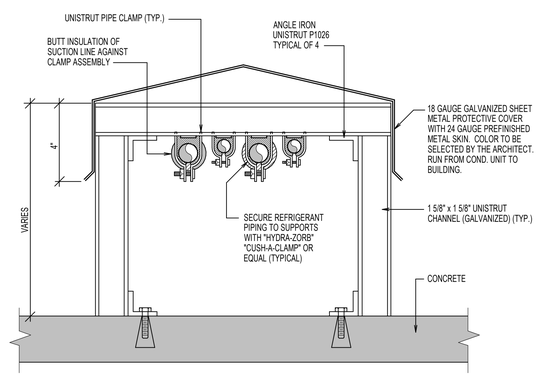

E EXTERIOR REFRIGERANT PIPE SUPPORT DETAIL

SCALE: NONE

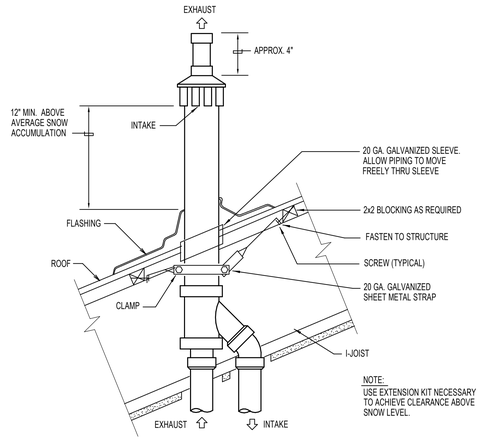

F CONCENTRIC ROOF TERMINATION DETAIL

SCALE: NONE

REFRIGERANT LINE SIZES					
UNIT *	LIQUID	SUCTION	UNIT *	LIQUID	SUCTION
CC 1A	3/8"	7/8"	CC 6	3/8"	7/8"
CC 1B	3/8"	7/8"	CC 7	3/8"	7/8"
CC 1C	3/8"	7/8"	CC 8	3/8"	7/8"
CC 1D	3/8"	7/8"	CC 9	3/8"	7/8"
CC 2A	3/8"	7/8"	CC 10	3/8"	7/8"
CC 2B	3/8"	7/8"	CC 11	3/8"	1 1/8"
CC 2C	3/8"	7/8"	CC 12	3/8"	7/8"
CC 2D	3/8"	7/8"	CC 13	3/8"	7/8"
CC 3A	3/8"	7/8"	CC 14	3/8"	7/8"
CC 3B	3/8"	7/8"	CC 15	3/8"	7/8"
CC 3C	3/8"	7/8"	CC 16	3/8"	7/8"
CC 30	3/8"	7/8"	CC 17	3/8"	7/8"
CC 4	3/8"	1 1/8"	CC 18	3/8"	7/8"
CC 5	3/8"	7/8"			

Printed 8/14/2024 4:16:08 PM © 2022 BHD Architects This document and the ideas and designs incorporated herein, as an instrument of professional service, are the property of BHD Architects, and may not be used in duplication whole or in part for any other project without written authorization of BHD Architects.

bhd ARCHITECTS
www.bhdarchitects.com
Phone 801.571.0010
Fax 801.571.0303
Toll Free 888.571.0010
65 East Wadsworth Park Drive
Suite 205 Draper, Utah 84020



Engineered Systems Associates
1355 EAST CENTER
POCATELLO, IDAHO 83201
PHONE: (208) 233-0501
FAX: (208) 233-0529
EMAIL esa@engsystems.com
ESA JOB NUMBER: 24065

THE CHURCH OF JESUS CHRIST OF LATTER-DAY SAINTS

Orem YSA 3rd 10 Ward Building
Orem UT YSA 3rd Stake
Approx 1700 West 575 South
Vineyard, Utah 84059

Date: 15 AUG 2024
BHD #: 2344
County Parcel: 37:228:0001
Plan Series: 2024 10 Ward S.C.
Owner #: 390-1814

Drawing Issue and Revision Schedule

#	Description	Date
1	Bid Documents	15 Aug 2024

MECHANICAL DETAILS

M501

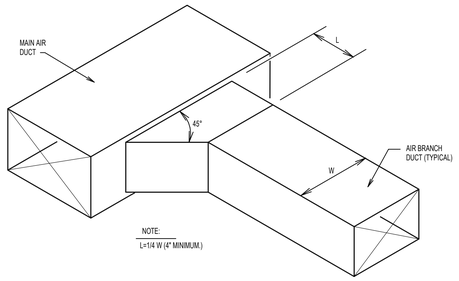

A SUPPLY OR RETURN AIR DUCT BRANCH CONNECTION DETAIL

SCALE: NONE

DIMENSION OF LONGEST SIDE, INCHES	SHEET METAL GAGE (ALL FOUR SIDES)	TRANSVERSE REINFORCING (1)					
		MINIMUM REINFORCING ANGLE SIZE AND MAXIMUM LONGITUDINAL SPACING BETWEEN TRANSVERSE JOINTS &/OR INTERMEDIATE REINFORCING	AT JOINTS				
			MIN. H, IN.	DRIVE SLIP / PLAIN S SLIP	HEMMED S SLIP	ALTERNT BAR SLIP	REIN-FORCED BAR SLIP
				RECOM-MENDED GAGE	RECOM-MENDED GAGE	RECOM-MENDED GAGE	RECOM-MENDED GAGE
UP THRU 12	26	NONE REQUIRED	1	26	26	24	24
13 - 18	24	NONE REQUIRED	1	24	24	24	24
19 - 30	24	1"X1"X1/8" @ 60 IN	1	-	24	24	24
31 - 36	22	1"X1"X1/8" @ 60 IN	1	-	-	22	22

(1) TRANSVERSE REINFORCING SIZE IS DETERMINED BY DIMENSION OF SIDE TO WHICH ANGLE IS APPLIED.

(2) LONGITUDINAL JOINTS TO BE PITTSBURGH OR SNAP LOCK TYPE.

B DUCT CONSTRUCTION DETAIL

SCALE: NONE

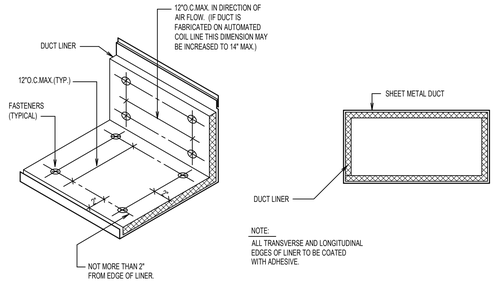

C DUCT LINER DETAIL

SCALE: NONE

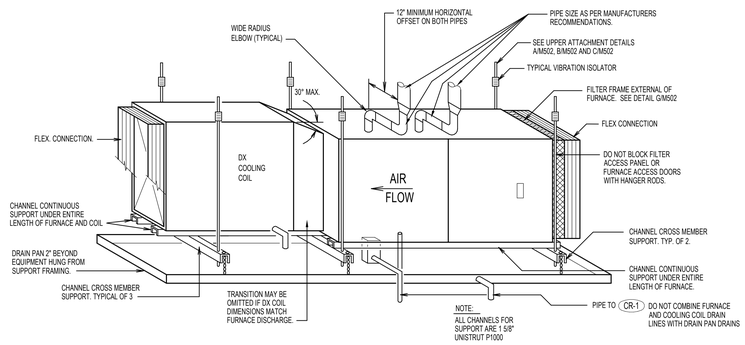

D FURNACE AND CASED DX COOLING COIL

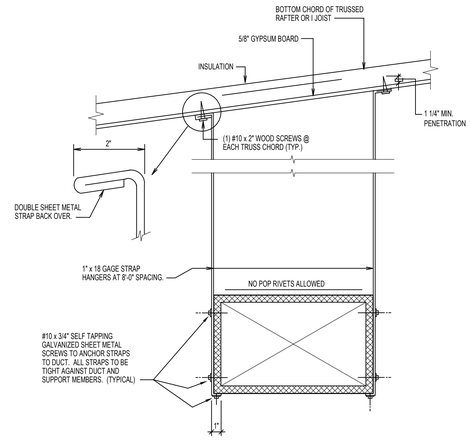

E DUCT STRAP HANGER DETAIL

SCALE: NONE

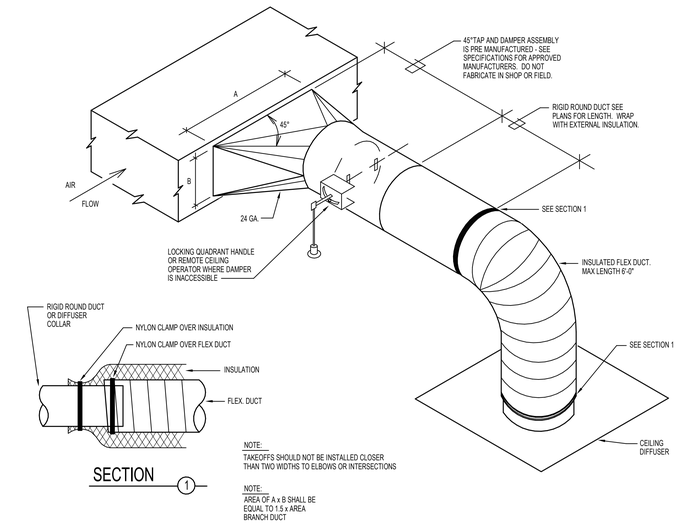

F HIGH EFFICIENCY SQUARE TO ROUND TAKEOFF DETAIL

SCALE: NONE

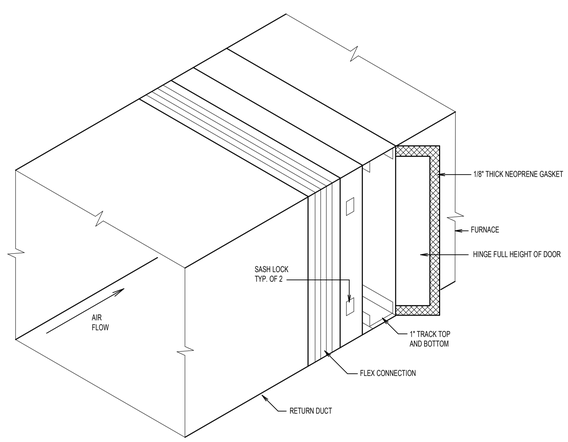

G EXTERNAL FILTER SECTION DETAIL

SCALE: NONE

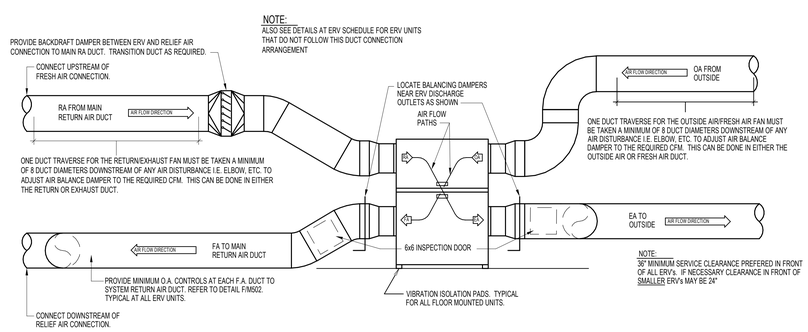

H TYPICAL ERV DAMPERING DETAIL

SCALE: NONE

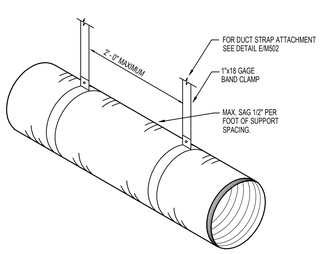

J FLEXIBLE DUCT SUPPORT DETAIL

SCALE: NONE

bhd ARCHITECTS
www.bhdarchitects.com
Phone 801.571.0010
Fax 801.571.0303
Toll Free 888.571.0010
65 East Wadsworth Park Drive
Suite 205 Draper, Utah 84020



ESA Engineered Systems Associates
1355 EAST CENTER
POCATELLO, IDAHO 83201
PHONE: (208) 233-0501
FAX: (208) 233-0529
EMAIL:esa@engsystems.com
ESA JOB NUMBER: 24065

THE CHURCH OF JESUS CHRIST OF LATTER-DAY SAINTS

Orem YSA 3rd 10 Ward Building
Orem UT YSA 3rd Stake

Approx. 1700 West 575 South
Vineyard, Utah 84059

Date: 15 AUG 2024
BHD #: 2344
County Parcel: 39-228-0001
Plan Series: 2024 10 Ward SC
Owner #: 590-1876

Drawing Issue and Revision Schedule

No.	Description	Date
1	Bid Drawings	15 Aug 2024

MECHANICAL DETAILS

M502

Printed 8/14/2024 4:14:08 PM © 2022 BHD Architects This document and the ideas and designs incorporated herein, as an instrument of professional service, are the property of BHD Architects, and may not be used in duplication in whole or in part for any other project without written authorization of BHD Architects.

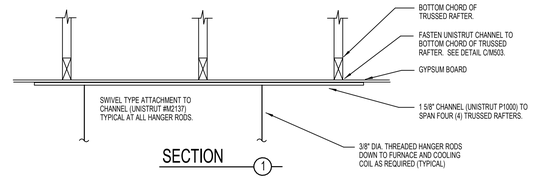

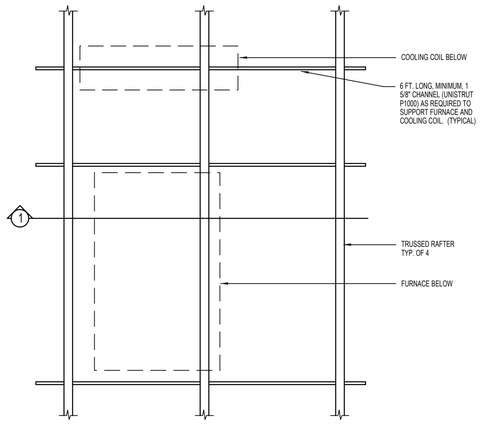

A UPPER SUPPORT DETAIL FOR TRUSSED RAFTERS
SCALE: NONE

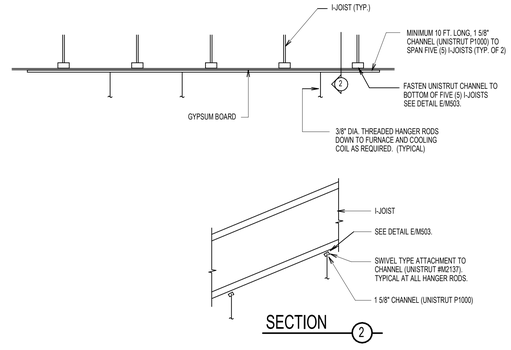

B UPPER SUPPORT DETAIL FOR TRUSSED RAFTER LOCATIONS
SCALE: NONE

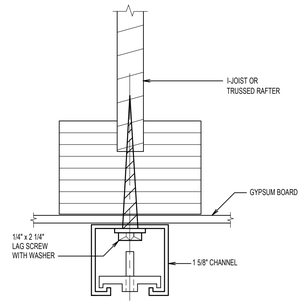

C UPPER ATTACHMENT DETAIL
SCALE: NONE

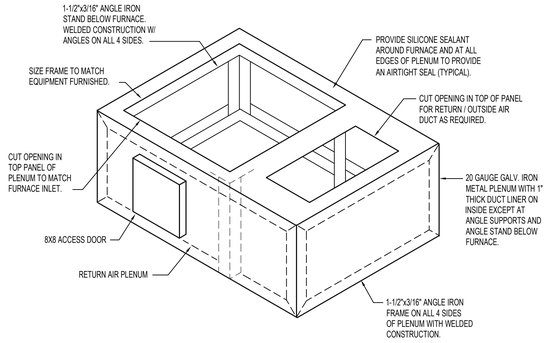

D RETURN AIR PLENUM DETAIL
SCALE: NONE

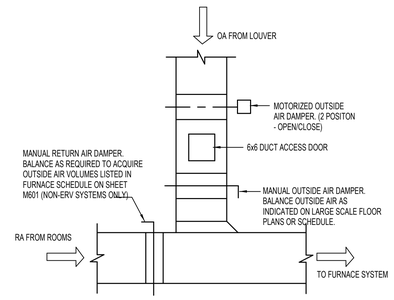

E TYPICAL OUTSIDE AIR DUCT DETAIL
NO SCALE

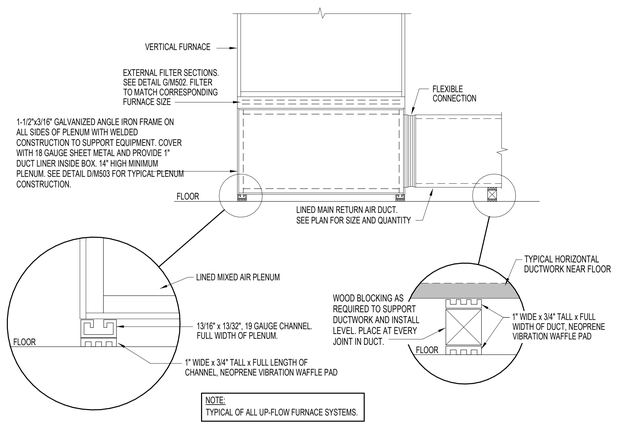

F VERTICAL FURNACE MOUNTING AND SUPPORT DETAIL
SCALE: NONE

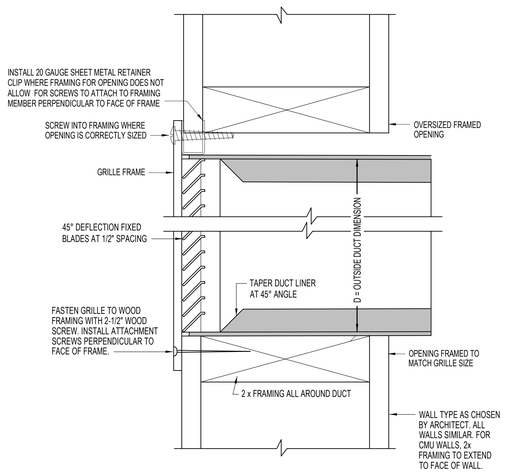

G GRILLE ATTACHMENT DETAIL
NO SCALE

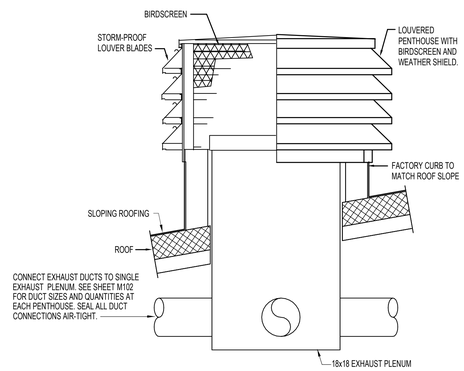

H DUCT CONNECTION AT PENTHOUSE
NO SCALE

bhd ARCHITECTS
www.bhdarchitects.com
Phone 801.571.0010
Fax 801.571.0303
Toll Free 888.571.0010
65 East Wadsworth Park Drive
Suite 205 Draper, Utah 84020

UTAH PROFESSIONAL ENGINEER
DAVID L. HANSEN
Aug 15, 2024
STATE OF UTAH

ESA Engineered Systems Associates
1355 EAST CENTER
POCATELLO, IDAHO 83201
PHONE: (208) 233-0501
FAX: (208) 233-0529
EMAILesa@engsystems.com
ESA JOB NUMBER: 24065

THE CHURCH OF JESUS CHRIST OF LATTER-DAY SAINTS

Orem YSA 3rd 10 Ward Building
Orem UT YSA 3rd Stake
Approx. 1700 West 575 South
Vineyard, Utah 84059

Date: 15 AUG 2024
BHD #: 2344
Plan Series: 2024 10 Wards S.C.
County Parcel: 39228:0001
Owner #: 590-1874

Drawing Issue and Revision Schedule

#	Date	Description
1	15 Aug 2024	Issued for Permit

MECHANICAL DETAILS

M503

Printed 8/14/2024 4:16:08 PM © 2022 BHD Architects This document and the ideas and designs incorporated herein, as an instrument of professional service, are the property of BHD Architects, and may not be used in duplication whole or in part for any other project without written authorization of BHD Architects.

EXHAUST FAN SCHEDULE (2)(3)(4)(5)

MARK	SERVES ROOM	MIN. A.C.F.M. (1)	STATIC PRESSURE IN. W.G.	MINIMUM WATTS	CONTROL	REMARKS
EF-1	MEN & WOMEN REST ROOM 140 141	1400	.50"	1/8 HP	WITH LIGHTS	DIRECT DRIVE IN-LINE FAN
EF-2	CUSTODIAN 142	80	.38"	87 W	WITH LIGHTS	CEILING MOUNT
EF-3	CUSTODIAN 143	80	.38"	87 W	WITH LIGHTS	CEILING MOUNT
EF-4	SERVING AREA 114	150	.38"	127 W	WALL SWITCH	CEILING MOUNT
EF-5	FAMILY RESTROOM 116	80	.38"	87 W	WITH LIGHTS	CEILING MOUNT
EF-6	FAMILY RESTROOM 167	80	.38"	87 W	WITH LIGHTS	CEILING MOUNT
EF-7	SERVING AREA 178	150	.38"	127 W	WALL SWITCH	CEILING MOUNT
EF-8	FAMILY RESTROOM 127	80	.38"	87 W	WITH LIGHTS	CEILING MOUNT
EF-9	FAMILY RESTROOM 178	80	.38"	87 W	WITH LIGHTS	CEILING MOUNT
EF-10	TECH ROOM 179	200	.38"	166 W	COOLING STAT	CEILING MOUNT

(1) SET BALANCE DAMPERS SHOWN ON M101 TO CFM LISTED.
(2) PROVIDE BACK-DRAFT DAMPER.
(3) CONTROL BY DIVISION 26.
(4) ELECTRICAL CHARACTERISTICS - COMPRESS: 120V / 1 PHASE / 60 HZ
(5) SEE SPECIFICATIONS FOR APPROVED MANUFACTURERS.

REGISTER, LOUVER & GRILLE SCHEDULE

MARK	TYPE	SERVICE	CFM RANGE (1)	NOMINAL SIZE	REMARKS (3)
S-1	SIDEWALL (5)	SA	800	24 x 10	(8)
S-2	SIDEWALL (5)	SA	300	16 x 8	(9)
R-1	LOW SIDEWALL (5)(6)	RA	150	12 x 6	SERVICED BY 12 x 3-1/2 UNLINED R.A. DUCT IN WALL (10)
R-2	LOW SIDEWALL (5)(6)	RA	600	18 x 12	SERVICED BY 18 x 10 R.A. DUCT IN CHASE (10)(13)
R-3	LOW SIDEWALL (5)(6)	RA	1600	42 x 24	SERVICED BY 18 x 16 R.A. DUCT IN CHASE (10)(13)
R-4	CEILING (4)	RA	300	12 x 10	(13)
ER-1	CEILING (4)	EA	200-300	10 x 10	COORDINATE WITH LIGHT FIXTURES WHERE APPLICABLE. (14)
TG-1	CEILING (4)	TA	200	10 x 6	COORDINATE WITH LIGHT FIXTURES WHERE APPLICABLE. (13)
SG-1	SOFFIT GRILLE (5)	OA	2000	48 x 24	COORDINATE WITH LIGHT FIXTURES WHERE APPLICABLE. (12)
SG-2	SOFFIT GRILLE (5)	OA	500-1200	42 x 16	COORDINATE WITH LIGHT FIXTURES WHERE APPLICABLE. (12)
PH-1	PENTHOUSE (5)	EA	1000	18 x 18 x 18	COORDINATE WITH ROOF PEAKS AND VALLEYS (7)(8)(11)(12)

(1) MAXIMUM NC = 25 AT MAXIMUM CFM NOTED.
(2) DESIGN BASED ON TITUS TDC TYPE 6. SEE SPECIFICATIONS FOR OTHER APPROVED MANUFACTURERS.
(3) SEE SPECIFICATIONS FOR APPROVED MANUFACTURERS.
(4) FINISH SHALL BE OFF-WHITE ENAMEL.
(5) BAKED ENAMEL FINISH WITH COLOR AS DIRECTED BY ARCHITECT.
(6) RETURN AIR GRILLE TO BE MOUNTED 6" FROM FLOOR TO BOTTOM EDGE OF GRILLE.
(7) BAKED ENAMEL FINISHED TO MATCH ROOF COLOR AS DIRECTED BY THE ARCHITECT.
(8) PROVIDE ALUMINUM BIRD SCREENS.
(9) SET REGISTER BLADES FOR 15° Deg. UPWARD DEFLECTION.
(10) BLADE ORIENTATION SHALL BE HORIZONTAL.
(11) MAXIMUM ACCEPTABLE FACE VELOCITY THROUGH NEW FREE AREA: 400 FPM
(12) FINISH COLOR AS DIRECTED BY ARCHITECT.
(13) BLADE ORIENTATION SHALL BE WITH LONG DIMENSION.
(14) WITH OPPOSED BLADE DAMPER IN GRILLE

NOTE: THE PLACEMENT OF ALL CEILING DIFFUSERS AND GRILLES SHALL BE INSTALLED PER ARCHITECTURAL REFLECTED CEILING PLAN.

AIR COOLED CONDENSING UNIT SCHEDULE

MARK (3)	MIN. NOMINAL SIZE (TONS) (2)	MINIMUM CIRCUIT AMPACITY	MCOP	CHAR. (5)(6)	REMARKS (1)(4)
CU-1A	4	27.9	50	208/60/1	WITH 0°F LOW AMBIENT HARD START KIT
CU-1B	4	27.9	50	208/60/1	WITH 0°F LOW AMBIENT HARD START KIT
CU-1C	4	27.9	50	208/60/1	WITH 0°F LOW AMBIENT HARD START KIT
CU-1D	4	27.9	50	208/60/1	WITH 0°F LOW AMBIENT HARD START KIT
CU-2A	4	27.9	50	208/60/1	WITH 0°F LOW AMBIENT HARD START KIT
CU-2B	4	27.9	50	208/60/1	WITH 0°F LOW AMBIENT HARD START KIT
CU-2C	4	27.9	50	208/60/1	WITH 0°F LOW AMBIENT HARD START KIT
CU-2D	4	27.9	50	208/60/1	WITH 0°F LOW AMBIENT HARD START KIT
CU-3A	4	27.9	50	208/60/1	WITH 0°F LOW AMBIENT HARD START KIT
CU-3B	4	27.9	50	208/60/1	WITH 0°F LOW AMBIENT HARD START KIT
CU-3C	4	27.9	50	208/60/1	WITH 0°F LOW AMBIENT HARD START KIT
CU-3D	4	27.9	50	208/60/1	WITH 0°F LOW AMBIENT HARD START KIT
CU-4	4	27.9	50	208/60/1	WITH 0°F LOW AMBIENT HARD START KIT
CU-5	3	21.9	35	208/60/1	WITH 0°F LOW AMBIENT HARD START KIT
CU-6	3	21.9	35	208/60/1	WITH 0°F LOW AMBIENT HARD START KIT
CU-7	3	21.9	35	208/60/1	WITH 0°F LOW AMBIENT HARD START KIT
CU-8	3	21.9	35	208/60/1	WITH 0°F LOW AMBIENT HARD START KIT
CU-9	3	21.9	35	208/60/1	WITH 0°F LOW AMBIENT HARD START KIT
CU-10	3	21.9	35	208/60/1	WITH 0°F LOW AMBIENT HARD START KIT
CU-11	5	34.6	60	208/60/1	WITH 0°F LOW AMBIENT HARD START KIT
CU-12	3	21.9	35	208/60/1	WITH 0°F LOW AMBIENT HARD START KIT
CU-13	3	21.9	35	208/60/1	WITH 0°F LOW AMBIENT HARD START KIT
CU-14	3	21.9	35	208/60/1	WITH 0°F LOW AMBIENT HARD START KIT
CU-15	3	21.9	35	208/60/1	WITH 0°F LOW AMBIENT HARD START KIT
CU-16	3	21.9	35	208/60/1	WITH 0°F LOW AMBIENT HARD START KIT
CU-17	3	21.9	35	208/60/1	WITH 0°F LOW AMBIENT HARD START KIT
CU-18	3	21.9	35	208/60/1	WITH 0°F LOW AMBIENT HARD START KIT

(1) REFRIGERANT = R-32 OR R-454B
(2) AT DESIGN CONDITIONS AND 95 Deg. F ENTERING AIR TEMPERATURE TO CONDENSER.
(3) COIL MARKS CORRESPOND WITH COOLING COIL AND FURNACE MARKS.
(4) SEE SPECIFICATIONS FOR APPROVED MANUFACTURERS. 13.0 SEER MINIMUM.
(5) ELECTRICAL CHARACTERISTICS - COMPRESS: 208V / 1 PHASE / 60 HZ
(6) COORDINATE ACTUAL ELECTRICAL RATINGS OF UNIT SUPPLIED WITH DIVISION 26.

COOLING COIL SCHEDULE (1)(2)

MARK	MIN. REQ'D. CAP. TOT.MBH	MIN. REQ'D. CAP. SEN.MBH	COND.ENT.EVAP. DB° F	COND.ENT.EVAP. WB° F	S.C.F.M.	MAX. PR. DR. IN.W.G. (3)	POSITION	REMARKS (4)(7)
CC-1A	49.2	40.4	79	66	1600	0.22	HORIZONTAL	4 TON NOMINAL, R-32 OR R-454B REFRIGERANT (6)
CC-1B	49.2	40.4	79	66	1600	0.22	HORIZONTAL	4 TON NOMINAL, R-32 OR R-454B REFRIGERANT (6)
CC-1C	49.2	40.4	79	66	1600	0.22	HORIZONTAL	4 TON NOMINAL, R-32 OR R-454B REFRIGERANT (6)
CC-1D	49.2	40.4	79	66	1600	0.22	HORIZONTAL	4 TON NOMINAL, R-32 OR R-454B REFRIGERANT (6)
CC-2A	49.2	40.4	79	66	1600	0.22	UPFLOW	4 TON NOMINAL, R-32 OR R-454B REFRIGERANT (5)
CC-2B	49.2	40.4	79	66	1600	0.22	UPFLOW	4 TON NOMINAL, R-32 OR R-454B REFRIGERANT (5)
CC-2C	49.2	40.4	79	66	1600	0.22	UPFLOW	4 TON NOMINAL, R-32 OR R-454B REFRIGERANT (5)
CC-2D	49.2	40.4	79	66	1600	0.22	UPFLOW	4 TON NOMINAL, R-32 OR R-454B REFRIGERANT (5)
CC-3A	49.2	40.4	79	66	1600	0.22	UPFLOW	4 TON NOMINAL, R-32 OR R-454B REFRIGERANT (5)
CC-3B	49.2	40.4	79	66	1600	0.22	UPFLOW	4 TON NOMINAL, R-32 OR R-454B REFRIGERANT (5)
CC-3C	49.2	40.4	79	66	1600	0.22	UPFLOW	4 TON NOMINAL, R-32 OR R-454B REFRIGERANT (5)
CC-3D	49.2	40.4	79	66	1600	0.22	UPFLOW	4 TON NOMINAL, R-32 OR R-454B REFRIGERANT (5)
CC-4	49.2	40.4	79	66	1600	0.22	HORIZONTAL	4 TON NOMINAL, R-32 OR 4-45B REFRIGERANT (6)
CC-5	36.0	32.4	79	66	1200	0.22	HORIZONTAL	3 TON NOMINAL, R-32 OR 4-45B REFRIGERANT (6)
CC-6	36.0	32.4	79	66	1200	0.22	HORIZONTAL	3 TON NOMINAL, R-32 OR 4-45B REFRIGERANT (6)
CC-7	36.0	32.4	79	66	1200	0.22	HORIZONTAL	3 TON NOMINAL, R-32 OR 4-45B REFRIGERANT (6)
CC-8	36.0	32.4	79	66	1200	0.22	HORIZONTAL	3 TON NOMINAL, R-32 OR 4-45B REFRIGERANT (6)
CC-9	36.0	32.4	79	66	1200	0.22	HORIZONTAL	3 TON NOMINAL, R-32 OR R-454B REFRIGERANT (6)
CC-10	36.0	32.4	79	66	1200	0.22	HORIZONTAL	3 TON NOMINAL, R-32 OR R-454B REFRIGERANT (6)
CC-11	61.1	40.9	79	66	1950	0.29	UPFLOW	5 TON NOMINAL, R-32 OR R-454B REFRIGERANT (5)
CC-12	36.0	32.4	79	66	1200	0.22	HORIZONTAL	3 TON NOMINAL, R-32 OR R-454B REFRIGERANT (6)
CC-13	36.0	32.4	79	66	1200	0.22	HORIZONTAL	3 TON NOMINAL, R-32 OR R-454B REFRIGERANT (6)
CC-14	36.0	32.4	79	66	1200	0.22	HORIZONTAL	3 TON NOMINAL, R-32 OR R-454B REFRIGERANT (6)
CC-15	36.0	32.4	79	66	1200	0.22	HORIZONTAL	3 TON NOMINAL, R-32 OR R-454B REFRIGERANT (6)
CC-16	36.0	32.4	79	66	1200	0.22	HORIZONTAL	3 TON NOMINAL, R-32 OR R-454B REFRIGERANT (6)
CC-17	36.0	32.4	79	66	1200	0.22	HORIZONTAL	3 TON NOMINAL, R-32 OR R-454B REFRIGERANT (6)
CC-18	36.0	32.4	79	66	1200	0.22	HORIZONTAL	3 TON NOMINAL, R-32 OR R-454B REFRIGERANT (6)

(1) COIL MARKS CORRESPOND WITH CONDENSING UNIT AND FURNACE MARKS.
(2) COMPLETE WITH FACTORY COIL BOX AND COIL.
(3) WET COIL
(4) USE NEXT LARGE SIZE COIL IF NECESSARY TO MEET MAX. PRESSURE DROP REQUIREMENTS.
(5) UP-FLOW COIL.
(6) HORIZONTAL COIL.
(7) SEE SPECIFICATIONS FOR APPROVED MANUFACTURERS.

FURNACE SCHEDULE (2)(8)

MARK	MIN.REQ'D OUTPUT BTU/HR (1)	MINIMUM A.C.F.M.	MINIMUM OUTSIDE AIR	EXT. S.P. IN.W.G.	MOTOR MIN. H.P.	MOTOR SPEED (5)	REMARKS
F-1A	93,000	1600	300	0.60	1/2	MED. HIGH (4)	110,000 BTU INPUT (6)
F-1B	93,000	1600	300	0.60	1/2	MED. HIGH (4)	110,000 BTU INPUT (6)
F-1C	93,000	1600	300	0.60	1/2	MED. HIGH (4)	110,000 BTU INPUT (6)
F-1D	93,000	1600	300	0.60	1/2	MED. HIGH (4)	110,000 BTU INPUT (6)
F-2A	93,000	1600	250	0.60	1/2	MED. HIGH (4)	110,000 BTU INPUT (6)
F-2B	93,000	1600	250	0.60	1/2	MED. HIGH (4)	110,000 BTU INPUT (6)
F-2C	93,000	1600	250	0.60	1/2	MED. HIGH (4)	110,000 BTU INPUT (6)
F-2D	93,000	1600	250	0.60	1/2	MED. HIGH (4)	110,000 BTU INPUT (6)
F-3A	93,000	1600	300	0.60	1/2	MED. HIGH (4)	110,000 BTU INPUT (6)
F-3B	93,000	1600	300	0.60	1/2	MED. HIGH (4)	110,000 BTU INPUT (6)
F-3C	93,000	1600	300	0.60	1/2	MED. HIGH (4)	110,000 BTU INPUT (6)
F-3D	93,000	1600	300	0.60	1/2	MED. HIGH (4)	110,000 BTU INPUT (6)
F-4	93,000	1600	350	0.60	1/2	MED. HIGH (4)	110,000 BTU INPUT (7)
F-5	68,000	1200	275	0.60	1/3	MED. HIGH (4)	88,000 BTU INPUT (7)
F-6	68,000	1200	340	0.60	1/3	MED. HIGH (4)	88,000 BTU INPUT (7)
F-7	68,000	1200	340	0.60	1/3	MED. HIGH (4)	88,000 BTU INPUT (7)
F-8	68,000	1200	340	0.60	1/3	MED. HIGH (4)	88,000 BTU INPUT (7)
F-9	68,000	1200	160	0.60	1/3	MED. HIGH (4)	88,000 BTU INPUT (7)
F-10	68,000	1200	160	0.60	1/3	MED. HIGH (4)	88,000 BTU INPUT (7)
F-11	112,000	1950	1200	0.60	1	MED. HIGH (4)	120,000 BTU INPUT (6)
F-12	68,000	1200	160	0.60	1/3	MED. HIGH (4)	88,000 BTU INPUT (7)
F-13	68,000	1200	340	0.60	1/3	MED. HIGH (4)	88,000 BTU INPUT (7)
F-14	68,000	1200	340	0.60	1/3	MED. HIGH (4)	88,000 BTU INPUT (7)
F-15	68,000	1200	340	0.60	1/3	MED. HIGH (4)	88,000 BTU INPUT (7)
F-16	68,000	1200	340	0.60	1/3	MED. HIGH (4)	88,000 BTU INPUT (7)
F-17	68,000	1200	340	0.60	1/3	MED. HIGH (4)	88,000 BTU INPUT (7)
F-18	68,000	1200	340	0.60	1/3	MED. HIGH (4)	88,000 BTU INPUT (7)

(1) BTU/HR OUTPUT AT SEA LEVEL RATING
(2) FURNACE MARKS CORRESPOND WITH CONDENSING UNIT AND COOLING COIL MARKS.
(3) ELECTRICAL CHARACTERISTICS - MOTOR: 120V / 1 PHASE / 60 HZ
(4) MAY VARY ACCORDING TO MANUFACTURER. INSTALL NECESSARY JUMPERS SO THAT FAN OPERATES ONLY AT COOLING SPEED WHENEVER THE FAN CIRCUIT IS ENERGIZED.
(5) SET FAN MOTOR SPEED TAP TO LOWEST POSSIBLE SETTING TO ACHIEVE DESIGN AIR FLOW.
(6) UP-FLOW UNIT WITH 14" HIGH PLENUM BASE.
(7) HORIZONTAL UNIT WITH ATTACHED DX COIL.
(8) SEE SPECIFICATIONS FOR APPROVED MANUFACTURERS. - 92% MINIMUM AFUE.

DIFFUSER SCHEDULE (2)(4)

MARK	C.F.M. RANGE (1)	DIFFUSER SIZE	NECK CONN.	BLOW	PATTERN	AIR DIST./SIDE A (%)	AIR DIST./SIDE B (%)
D-1 CFM	50 - 199	9 x 9	8" Dia.	3 WAY		38	31
D-2 CFM	50 - 199	9 x 9	8" Dia.	4 WAY		25	25
D-3 CFM	200-400	12 x 12	10" Dia.	4 WAY		25	25
D-4 CFM	200-400	24 x 24 MODULE 12 x 12 GRILLE	10" Dia.	4 WAY		25	25
D-5 CFM	200-400	12 x 12	10" Dia.	4 WAY		38	31
D-6 CFM	50 - 199	9 x 9	8" Dia.	2 WAY		50	50

NOTE: THE PLACEMENT OF ALL CEILING DIFFUSERS AND GRILLES SHALL BE INSTALLED PER ARCHITECTURAL REFLECTED CEILING PLAN.

ENERGY RECOVERY VENTILATOR

MARK	CFM	ELECTRICAL FLA	MCA	MCOP	H.P.	VOLTS	HERTZ	PHASE	REMARKS
ERV-1A	600	18.0	20.3	25	(2) 3/4	115	60	1	(1)(3)
ERV-1B	600	18.0	20.3	25	(2) 3/4	115	60	1	(1)(3)
ERV-2A	500	18.0	20.3	25	(2) 3/4	120	60	1	(1)(2)
ERV-2B	500	18.0	20.3	25	(2) 3/4	120	60	1	(1)(3)
ERV-3A	600	18.0	20.3	25	(2) 3/4	120	60	1	(1)(2)
ERV-3B	600	18.0	20.3	25	(2) 3/4	120	60	1	(1)(3)
ERV-11	1200	18.0	20.3	25	(2) 3/4	120	60	1	(1)(3)

(1) RENEWAIRE MODEL HE1XINV. TWO 0.75 HP FANS. 25 MAX. FUSE SIZE.
(2) THIS UNIT TO BE HUNG UPSIDE DOWN AS SHOWN IN DETAIL AT RIGHT.
(3) THIS UNIT TO BE HUNG RIGHT SIDE UP CONNECT DUCTWORK AS LABELED.

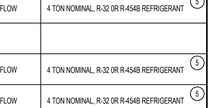

CONNECT MATCHING DUCTS TO LABELED CONNECTIONS
ERV-UNITS 1A & 11



CONNECT OPPOSITE DUCTS TO LABELED CONNECTIONS
ERV-UNITS 1B, 2B, & 3B

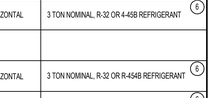

CONNECT OPPOSITE DUCTS TO LABELED CONNECTIONS
ERV-UNITS 2A & 3A

NOTE: PROVIDE BACKDRAFT DAMPER ON FA DUCT BEFORE CONNECTING TO MAIN RETURN AIR DUCT. TYPICAL ALL ERV UNITS.

ELECTRIC HEATER SCHEDULE

MARK	SERVES ROOM	WATTS	CHAR.	AMPS	REMARKS (1)
EH-1	128	2000	208V / 1 PHASE / 60HZ	8.5	QMARK MODEL AWH-4204 WITH SM-1 SEMI-RECESSED FRAME
EH-2	121	2000	208V / 1 PHASE / 60HZ	8.5	QMARK MODEL AWH-4204 WITH SM-1 SEMI-RECESSED FRAME
EH-3	117	2000	208V / 1 PHASE / 60HZ	8.5	QMARK MODEL AWH-4204 WITH SM-1 SEMI-RECESSED FRAME
EH-4	115	2000	208V / 1 PHASE / 60HZ	8.5	QMARK MODEL AWH-4204 WITH SM-1 SEMI-RECESSED FRAME
EH-5	129	2000	208V / 1 PHASE / 60HZ	8.5	QMARK MODEL AWH-4204 WITH SM-1 SEMI-RECESSED FRAME
EH-6	153	3000	208V / 1 PHASE / 60HZ	14.5	QMARK MODEL MUH03-81 WITH B10 WALL MOUNTING BRACKET.
EH-7	177	2000	208V / 1 PHASE / 60HZ	8.5	QMARK MODEL AWH-4204 WITH SM-1 SEMI-RECESSED FRAME
EH-8	188	2000	208V / 1 PHASE / 60HZ	8.5	QMARK MODEL AWH-4204 WITH SM-1 SEMI-RECESSED FRAME
EH-9	169	3000	208V / 1 PHASE / 60HZ	14.5	QMARK MODEL MUH03-81 WITH WALL BRACKET. MOUNT THERMOSTAT ON UNIT

(1) SEE SPECIFICATIONS FOR OTHER APPROVED MANUFACTURERS.

NOTES:
1- THE MECHANICAL CONTRACTOR SHALL VERIFY MOTOR VOLTAGES WITH THE ELECTRICAL DRAWINGS BEFORE ORDERING MOTORIZED EQUIPMENT AND CONTROLS. STANDARD 200 VOLT FOR 208 VOLT MOTOR NAME PLATE VOLTAGE SHALL BE NEMA STANDARD 230 VOLT FOR THREE PHASE SYSTEM AND SHALL BE NEMA SYSTEM. STARTER HEATERS 240 VOLT THREE PHASE OR SINGLE PHASE INSTALLED SHALL BE COORDINATED WITH THE NAME PLATE DATA.
2- S.C.F.M. LISTED IS STANDARD AIR.

Printed 8/14/2024 4:16:09 PM © 2022 BHD Architects This document and the ideas and designs incorporated herein, as an instrument of professional service, are the property of BHD Architects, and may not be used in duplication or part for any other project without written authorization of BHD Architects.

bhd ARCHITECTS
www.bhdarchitects.com
Phone 801.571.0010
Fax 801.571.0303
Toll Free 888.571.0010
65 East Wadsworth Park Drive
Suite 205 Draper, Utah 84020

STATE OF UTAH LICENSED PROFESSIONAL ENGINEER DAVID L. HANSEN Aug 15, 2024

ESA Engineered Systems Associates
1355 EAST CENTER
POCATELLO, IDAHO 83201
PHONE: (208) 233-0501
FAX: (208) 233-0529
EMAIL:esa@engsystems.com
ESA JOB NUMBER: 24065

THE CHURCH OF JESUS CHRIST OF LATTER-DAY SAINTS

Orem YSA 3rd 10 Ward Building
Orem UT YSA 3rd Stake
Approx. 1700 West 575 South
Vineyard, Utah 84059

Owner #: 590-1876
Plan Series: 2024 10 Ward SC
County Parcel: 39-228-0001
BHD #: 2344
Date: 15 AUG 2024

Drawing Issue and Revision Schedule

No.	Date	Description
1	15 Aug 2024	Bid Drawings

MECHANICAL SCHEDULES

M601

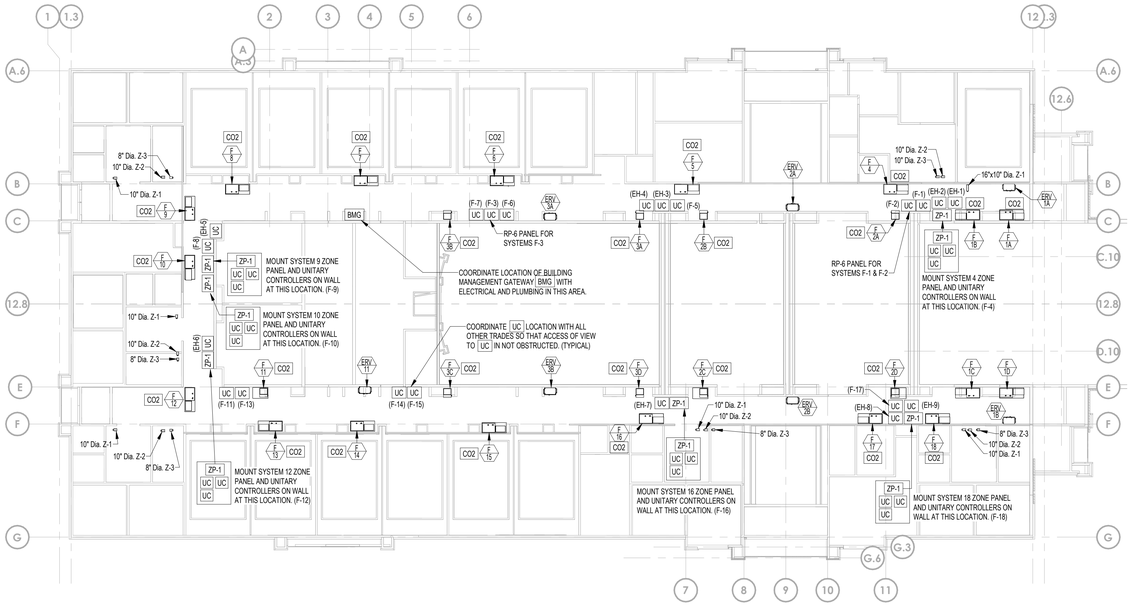

E
N
S
W

EQUIPMENT PLATFORM - TEMPERATURE CONTROLS

SCALE: 1/16" = 1'-0"

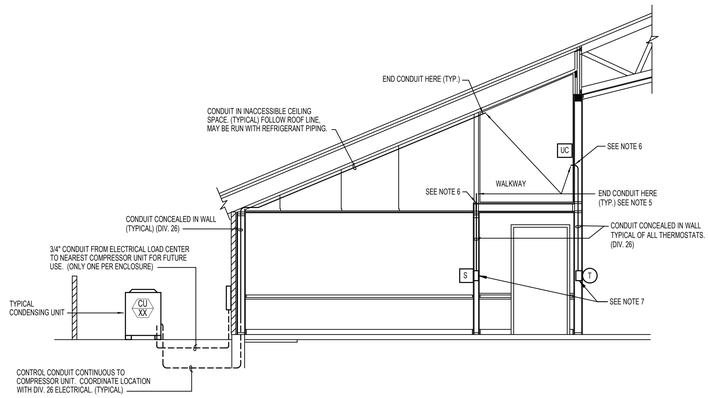

A MINIMUM REQUIRED CONDUIT-TYPICAL DETAIL

SCALE: NONE

NOTE:
ALL TEMPERATURE CONTROL CONDUIT SHALL BE FURNISHED AND INSTALLED BY DIVISION 26.

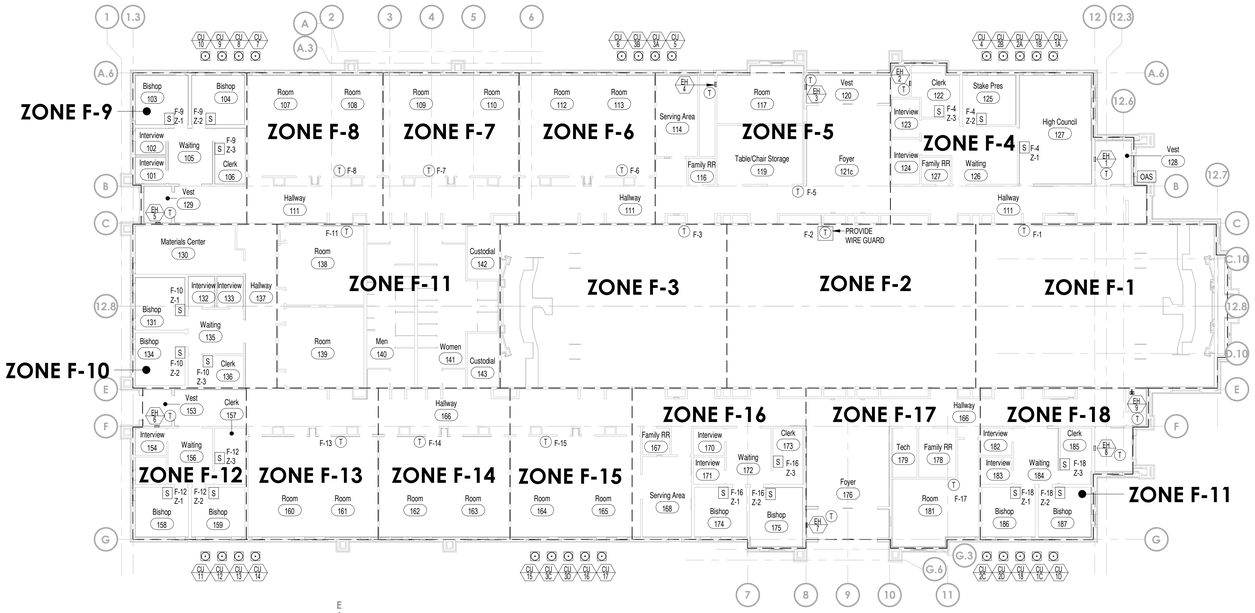

E
N
S
W

MAIN FLOOR PLAN - TEMPERATURE CONTROLS

SCALE: 1/16" = 1'-0"

SYMBOLS

- UC — UNITARY CONTROLLER (DIV. 23). MOUNT MODULE IN ACCESSIBLE LOCATION ON OR NEAR ASSOCIATED FURNACE.
- RP-6 — RELAY PANEL (DIV. 23). MOUNT AT 5'-0" TO BOTTOM OF CABINET.
- T — THERMOSTAT (LCBS) OUTLET (CONDUIT BY DIV. 26)
- S — INDOOR AIR SENSOR OUTLET (CONDUIT BY DIV. 26)
- BMG — BUILDING MANAGEMENT GATEWAY (DIV. 23)
- OAS — GLOBAL OUTDOOR AIR SENSOR (DIV. 23) TO BE INSTALLED ON THE NORTH SIDE OF THE BUILDING (OUT OF DIRECT SUNLIGHT) AND CONNECTED TO ANY ZONE.
- CO2 — CO_2 SENSOR (DIV. 23). INSTALL UPSTREAM OF RELIEF OR OUTSIDE AIR CONNECTION.
- CRO — COMBINATION RELAY AND THERMAL OVERLOAD DISCONNECT (WITH 20 AMP RIB PANEL 240 1B)
- ZP-1 — 3 ZONE PANEL (DIV. 23)
- Z* — ZONE PANEL (* = ZONE NUMBER)
- SD — DUCT SMOKE DETECTOR

NOTES:

1. BOXES FOR THERMOSTAT (T) AND (S) OUTLETS SHALL BE 2"x4" WITH LONG DIMENSION VERTICAL. USE METAL BRACKET OF COVER PLATE ASSEMBLY TO MOUNT THERMOSTAT HORIZONTAL.
2. CONDUIT TO BE 1/2" UNLESS NOTED OTHERWISE.
3. TEMPERATURE CONTROL WIRING THAT IS NOT IN CONDUIT SHALL BE RUN PARALLEL AND PERPENDICULAR TO BUILDING CONSTRUCTION LINES. SEE SPECIFICATIONS FOR ACCEPTABLE FASTENING METHODS AND MAXIMUM ALLOWABLE SPACING BETWEEN FASTENERS.
4. TEMPERATURE CONTROL WIRING THAT IN NOT IN CONDUIT SHALL BE LABELED. PROVIDE A LABEL AT ALL POINTS WHERE TEMPERATURE CONTROL WIRING ENTERS CONDUIT AND AT CONNECTIONS TO DEVICES.
5. SEAL OPEN END OF CONDUIT AIR-TIGHT AROUND THERMOSTAT / SENSOR WIRE WITH SEALANT COMPOUND. SEE SPECIFICATIONS FOR APPROVED PRODUCT.
6. SEAL ANNULAR SPACE BETWEEN CONDUIT AND OPENING IN FLOOR OR WALL PENETRATIONS WITH SEALANT COMPOUND. SEE SPECIFICATIONS FOR APPROVED PRODUCT.
7. SEAL OPEN END OF CONDUIT AT J-BOX AIR-TIGHT AROUND THERMOSTAT / SENSOR WIRE. SEAL ALL AIR GAPS AROUND J-BOX TO ISOLATE J-BOX FROM WALL CAVITY. SEAL BACK OF THERMOSTAT AROUND WIRES. PACK J-BOX WITH GLASS FIRE BAT INSULATION. USE SEALING COMPOUND SPECIFICALLY MADE FOR REFRIGERANT AND AIR-CONDITIONING APPLICATIONS. SEE SPECIFICATIONS FOR APPROVED PRODUCTS.

bhd ARCHITECTS
www.bhdarchitects.com
Phone 801.571.0010
Fax 801.571.0303
Toll Free 888.571.0010
65 East Wadsworth Park Drive
Suite 205 Draper, Utah 84020

DAVID L. HANSEN — Aug 15, 2024

Engineered Systems Associates
1355 EAST CENTER
POCATELLO, IDAHO 83201
PHONE: (208) 233-0501
FAX: (208) 233-0529
EMAIL:esa@engsystems.com
ESA JOB NUMBER: 24065

THE CHURCH OF JESUS CHRIST OF LATTER-DAY SAINTS

Orem YSA 3rd 10 Ward Building
Orem UT YSA 3rd Stake
Approx. 1700 West 575 South
Vineyard, Utah 84059

Owner #: 590-187-6
Plan Series: 2024 10 Ward SC
County Parcel: 39-228-0001
BHD #: 2344
Date: 15 AUG 2024

Drawing Issue and Revision Schedule		
No.	Description	Date
1	15 Aug 2024	Bid Drawings

AUTOMATIC TEMPERATURE CONTROL PLANS

ME101

Printed 8/14/2024 4:16:13 PM © 2022 BHD Architects This document and the ideas and designs incorporated herein, as an instrument of professional service, are the property of BHD Architects, and may not be used in any other project without written authorization of BHD Architects.

Printed 8/14/2024 4:16:14 PM © 2022 BHD Architects This document and the ideas and designs incorporated herein, as an instrument of professional service, are the property of BHD Architects, and may not be used in whole or in part for any other project without written authorization of BHD Architects.

LEGEND:

DIVISION 26 OR FACTORY PRE-WIRED

DIVISION 23 WIRING

NOTES
1. ECHELON BUS (E-BUS) MUST BE INSTALLED AT LEAST 12" AWAY FROM ALL ELECTRICAL DEVICES: I.E. MOTORS, LIGHT, ETC.
2. DO NOT USE THERMOSTAT CABLE AS NETWORK CABLE. USE SPECIFIED CABLE.

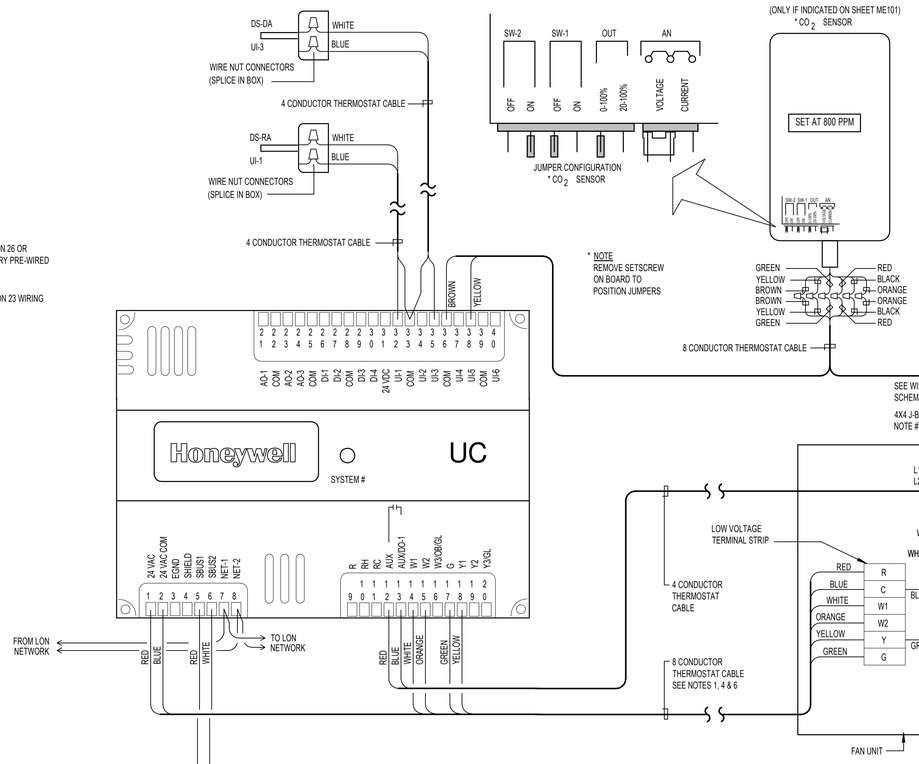

WIRING DIAGRAM

SYSTEMS: F-5, F-6, F-7, F-8, F-11, F-13, F-14, F-15 & F-17

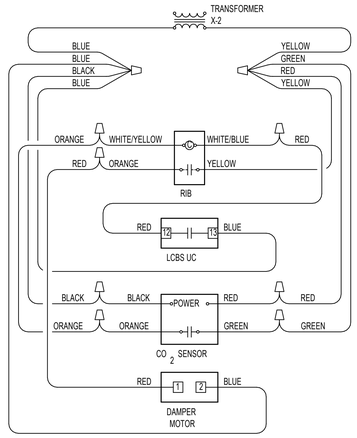

WIRING SCHEMATIC, X-2

ENERGY RECOVERY VENTILATOR WIRING

SYSTEMS: F-1, F-2, F-3 & F-11

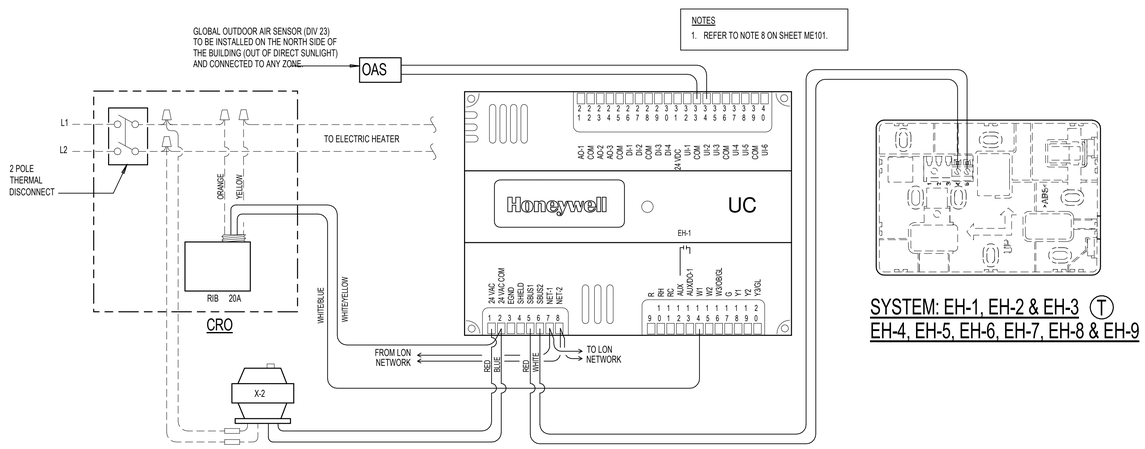

ELECTRIC HEATER WIRING DIAGRAM

SYSTEM: EH-1, EH-2 & EH-3 (T) EH-4, EH-5, EH-6, EH-7, EH-8 & EH-9

bhd ARCHITECTS
www.bhdarchitects.com
Phone 801.571.0010
Fax 801.571.0303
Toll Free 888.571.0010
65 East Wadsworth Park Drive Suite 205 Draper, Utah 84020



Engineered Systems Associates
1355 EAST CENTER
POCATELLO, IDAHO 83201
PHONE: (208) 233-0501
FAX: (208) 233-0529
EMAIL esa@engsystems.com
ESA JOB NUMBER: 24065

THE CHURCH OF JESUS CHRIST OF LATTER-DAY SAINTS

Orem YSA 3rd 10 Ward Building
Orem UT YSA 3rd Stake

Approx. 1700 West 575 South
Vineyard, Utah 84059

Owner #: 590-1878
Plan Series: 2024 10 Ward S.C.
County Parcel: 37-226-0001
BHD #: 2344
Date: 15 AUG 2024

Drawing Issue and Revision Schedule

#	Date	Description
1	15 Aug 2024	Bid Drawings

AUTOMATIC TEMPERATURE CONTROL DIAGRAMS

ME701

Printed 8/14/2024 4:16:14 PM © 2022 BHD Architects This document and the ideas and designs incorporated herein, as an instrument of professional service, are the property of BHD Architects, and may not be used or published in whole or in part for any other project without written authorization of BHD Architects.

LEGEND:

DIVISION 26 OR FACTORY PRE-WIRED

DIVISION 23 WIRING

NOTES:

FOR NOTES SEE SHEET ME701

3- #12 BLACK/WHITE/GREEN

PART OF 8 CONDUCTOR THERMOSTAT CABLE

8 CONDUCTOR THERMOSTAT CABLE

PART OF 8 CONDUCTOR THERMOSTAT CABLE

DS-DA

UI-3

WHITE

BLUE

WIRE NUT CONNECTORS (SPLICE IN BOX)

4 CONDUCTOR THERMOSTAT CABLE

DS-RA

UI-1

WHITE

BLUE

WIRE NUT CONNECTORS (SPLICE IN BOX)

4 CONDUCTOR THERMOSTAT CABLE

BROWN

YELLOW

Honeywell

UC

SYSTEM #

AO1 AO2 AO3 COM DI1 DI2 COM DI3 DI4 24 VDC COM U1 U2 COM U3 U4 U5 COM U6

24 VAC 24 VAC COM EGND SBUS SBUS1 SBUS2 NET1 NET2

R RC RH AUX AUX/DO-1 W2 W1/DO/DO-2 G Y1 Y2 Y3/DI-3

FROM LON NETWORK

TO LON NETWORK

RED BLUE RED WHITE

TAN WHITE ORANGE GREEN YELLOW PINK

4 CONDUCTOR THERMOSTAT CABLE

12 CONDUCTOR THERMOSTAT CABLE SEE NOTES 1, 4 AND 6.

T

SYSTEMS: F-1, F-2, & F-3

TB1

SPACE
L1
N
GND
R1 FAN UNIT "a"
R1 FAN UNIT "b"
R1 FAN UNIT "c"
R1 FAN UNIT "d"
G
X
SPACE
R3 FAN UNIT "a"
R3 FAN UNIT "d"
W1
X
SPACE
R5 FAN UNIT "a"
R5 FAN UNIT "c"
Y1
X
SPACE

BLACK
WHITE
GREEN
RED
GREEN
RED
GREEN
RED
GREEN
GREEN
WHITE
WHITE
YELLOW
YELLOW
YELLOW

X-1

FAN R1

DAMPER R2

HEAT 1 R3

HEAT 2 R4

COOL 1 R5

COOL 2 R6

PANEL RP-6

TB2

SPACE
R
X
GND
R2 FAN UNIT "a"
R2 FAN UNIT "b"
R2 FAN UNIT "c"
R2 FAN UNIT "d"
A2
X
SPACE
R4 FAN UNIT "a"
R4 FAN UNIT "d"
W2
X
SPACE
R6 FAN UNIT "b"
R6 FAN UNIT "c"
Y2
X
G+
GO
NO
COM
SPACE

RED
BLUE
BLACK
BROWN
BLACK
BROWN
TAN
WHITE
WHITE
GREY
YELLOW
YELLOW
PINK
RED
BLACK
ORANGE
GREEN

PART OF 12 CONDUCTOR THERMOSTAT CABLE

PART OF 8 CONDUCTOR THERMOSTAT CABLE

8 CONDUCTOR THERMOSTAT CABLE

8 CONDUCTOR THERMOSTAT CABLE

SW-2 SW-1 OUT AN

OFF ON OFF ON 0-10V 2-10V VOLTAGE CURRENT

JUMPER CONFIGURATION

* CO_2 SENSOR

* CO_2 SENSOR

SET AT 800 PPM

* NOTE :
REMOVE SETSCREW ON BOARD TO POSITION JUMPERS

GREEN YELLOW BROWN BROWN YELLOW GREEN

RED BLACK ORANGE ORANGE BLACK RED

GREEN/BLUE

RED/GREEN

X-2

BLACK WHITE

BLACK

BROWN

4X4 J BOX SEE NOTE #7

RED BLUE WHITE GREEN YELLOW GREEN

R C W Y G

L1 L2

FAN UNIT "a"

SEE NOTE #2

COMPRESSOR UNIT

4 CONDUCTOR THERMOSTAT CABLE

DM-2

1 2 S1 S2 S3

WHITE BLUE

ERV "A"

ENERGY RECOVERY VENTILATOR. SEE DETAIL ON SHEET ME701 FOR WIRING CONNECTIONS.

120V 1PHZ 60HZ

H N

SWITCH BY DIV 26

BLACK

WHITE

BLACK #12

SMOKE DETECTOR

10 A

120 VAC 120 VAC

AUX.

SD-1

ALARM

12 13 15 16

NC NO

#12

SR

BLACK #12

FAN UNIT DOOR SWITCH

AUX. J-BOX FURNISHED IN FAN UNIT

GREEN/BLUE

4X4 J BOX SEE NOTE #7

RED BLUE WHITE GREEN YELLOW GREEN

R C W Y G

L1 L2

FAN UNIT "b"

4 CONDUCTOR THERMOSTAT CABLE

COMPRESSOR UNIT SEE NOTE #2

120V 1PHZ 60HZ

H N

SWITCH BY DIV 26

BLACK

WHITE

BLACK #12

FAN UNIT DOOR SWITCH

AUX. J-BOX FURNISHED IN FAN UNIT

GREEN/BLUE

RED/GREEN

X-2

BLACK WHITE

BLACK

BROWN

4X4 J BOX SEE NOTE #7

RED BLUE WHITE GREEN YELLOW GREEN

R C W Y G

L1 L2

FAN UNIT "c"

SEE NOTE #2

COMPRESSOR UNIT

4 CONDUCTOR THERMOSTAT CABLE

DM-2

1 2 S1 S2 S3

WHITE BLUE

ERV "B"

ENERGY RECOVERY VENTILATOR. SEE DETAIL ON SHEET ME701 FOR WIRING CONNECTIONS.

120V 1PHZ 60HZ

H N

SWITCH BY DIV 26

BLACK

WHITE

BLACK #12

SMOKE DETECTOR

10 A

120 VAC 120 VAC

AUX.

SD-1

ALARM

12 13 15 16

NC NO

#12

SR

BLACK #12

AUX. J-BOX FURNISHED IN FAN UNIT

FAN UNIT DOOR SWITCH

8 CONDUCTOR THERMOSTAT CABLE

GREEN/BLUE

4X4 J BOX SEE NOTE #7

RED BLUE WHITE GREEN YELLOW GREEN

R C W Y G

L1 L2

FAN UNIT "d"

4 CONDUCTOR THERMOSTAT CABLE

COMPRESSOR UNIT SEE NOTE #2

120V 1PHZ 60HZ

H N

SWITCH BY DIV 26

BLACK

WHITE

BLACK #12

FAN UNIT DOOR SWITCH

AUX. J-BOX FURNISHED IN FAN UNIT

WIRING DIAGRAM

SYSTEMS: F-1, F-2 & F-3

bhd ARCHITECTS
www.bhdarchitects.com
Phone 801.571.0010
Fax 801.571.0303
Toll Free 888.571.0010
65 East Wadsworth Park Drive
Suite 205 Draper, Utah 84020

PROFESSIONAL ENGINEER DAVID L. HANSEN Aug 15, 2024 STATE OF UTAH

ESA Engineered Systems Associates
1355 EAST CENTER
POCATELLO, IDAHO 83201
PHONE: (208) 233-0501
FAX: (208) 233-0529
EMAIL esa@engsystems.com
ESA JOB NUMBER: 24065

THE CHURCH OF JESUS CHRIST OF LATTER-DAY SAINTS

Orem YSA 3rd 10 Ward Building
Orem UT YSA 3rd Stake

Approx. 1700 West 575 South
Vineyard, Utah 84059

Owner #: 390-186
Plan Series: 2024 10 Ward SC
County Parcel: 37:228:0001
BHD #: 2344
Date: 15 AUG 2024

Drawing Issue and Revision Schedule

#	Date	Description
1	15 Aug 2024	Bid Drawings

AUTOMATIC TEMPERATURE CONTROL DIAGRAMS

ME702

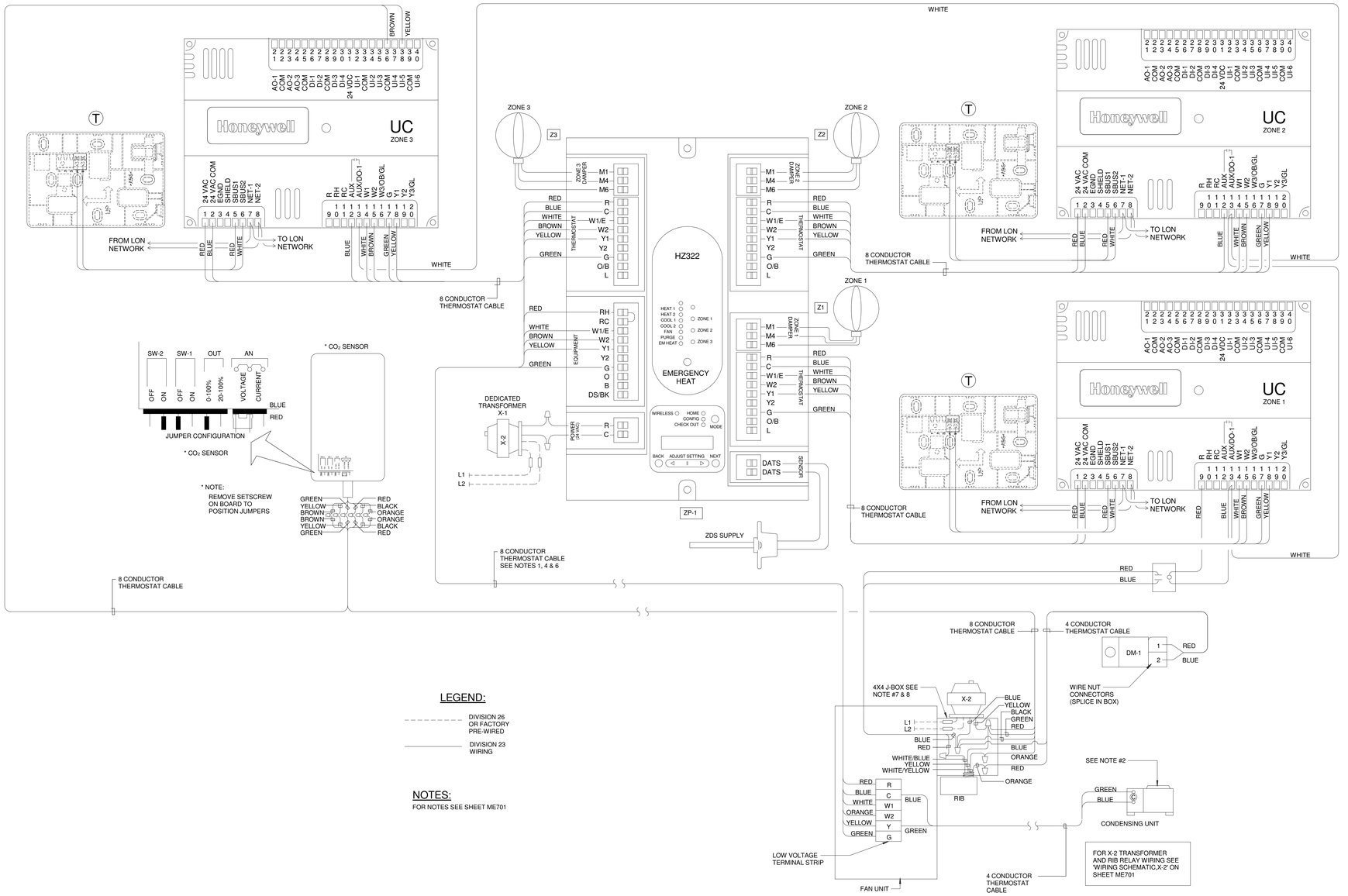

WIRING DIAGRAM

SYSTEMS: F-4, 9, 10, 12, 16 & 18

Printed 8/14/2024 4:16:14 PM © 2022 BHD Architects This document and the ideas and designs incorporated herein, as an instrument of professional service, are the property of BHD Architects, and may not be used or duplicated in whole or in part for any other project without written authorization of BHD Architects.

bhd ARCHITECTS
www.bhdarchitects.com
Phone 801.571.0010
Fax 801.571.0303
Toll Free 888.571.0010
65 East Wadsworth Park Drive
Suite 205 Draper, Utah 84020

DAVID L. HANSEN
Aug 15, 2024
STATE OF UTAH

Engineered Systems Associates
1355 EAST CENTER
POCATELLO, IDAHO 83201
PHONE: (208) 233-0501
FAX: (208) 233-0529
EMAILesa@engsystems.com
ESA JOB NUMBER: 24065

THE CHURCH OF JESUS CHRIST OF LATTER-DAY SAINTS

Orem YSA 3rd 10 Ward Building
Orem UT YSA 3rd Stake

Approx. 1700 West 575 South
Vineyard, Utah 84059

Owner #: 590-1876
Plan Series: 2024 10 Ward SC
County Parcel: 39-228-0001
BHD #: 2344
Date: 15 AUG 2024

Drawing Issue and Revision Schedule

1	15 Aug 2024	Bid Drawings
2	13 Sept 2024	Permit Set

AUTOMATIC TEMPERATURE CONTROL DIAGRAMS

ME703

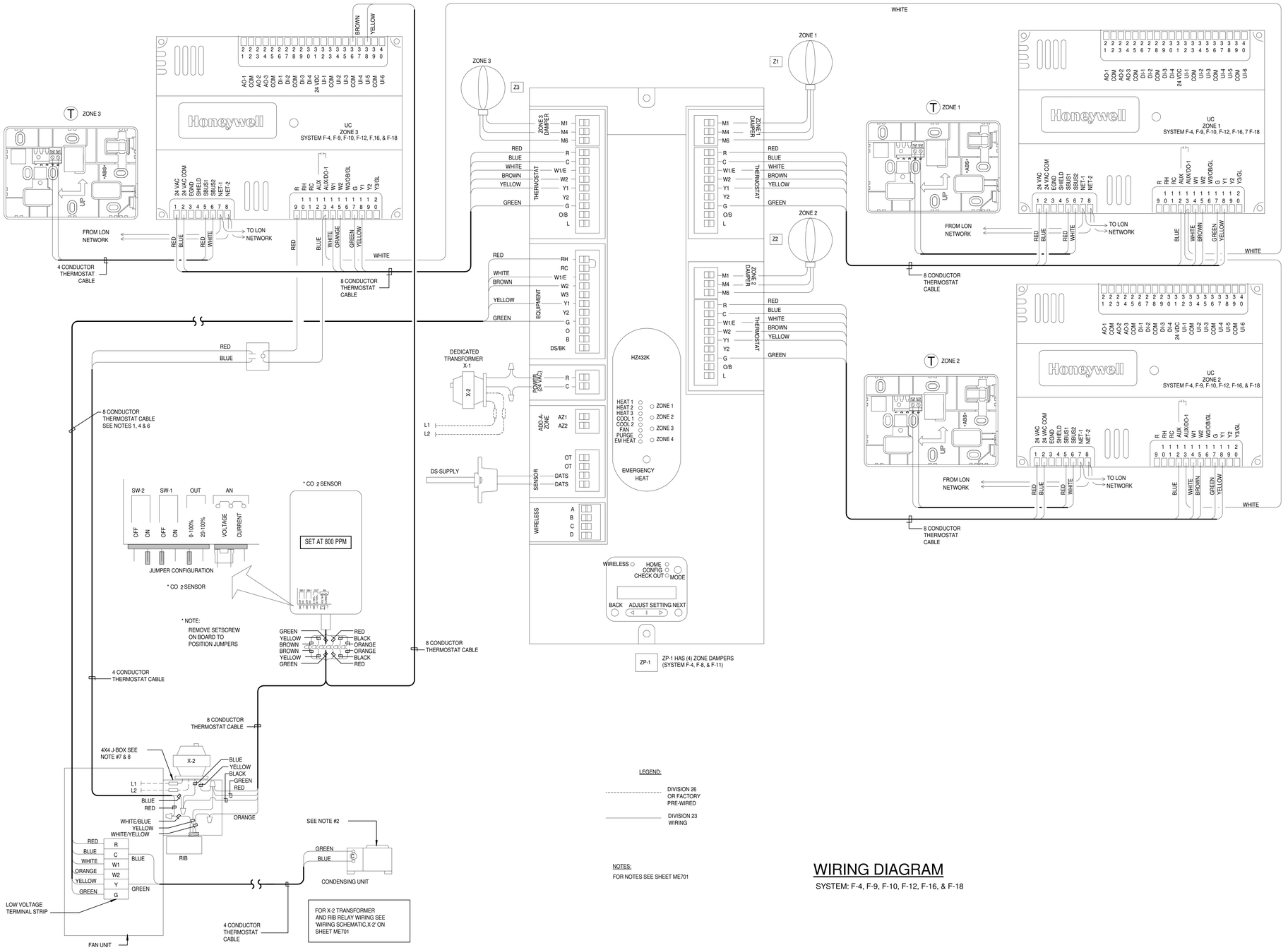

WIRING DIAGRAM

SYSTEM: F-4, F-9, F-10, F-12, F-16, & F-18

bhd ARCHITECTS
www.bhdarchitects.com
Phone 801.571.0010
Fax 801.571.0303
Toll Free 888.571.0010
65 East Wadsworth Park Drive
Suite 205 Draper, Utah 84020

DAVID L. HANSEN
Aug 15, 2024
STATE OF UTAH

Engineered Systems Associates
1355 EAST CENTER
POCATELLO, IDAHO 83201
PHONE: (208) 233-0501
FAX: (208) 233-0529
EMAILesa@engsystems.com
ESA JOB NUMBER: 24065

THE CHURCH OF JESUS CHRIST OF LATTER-DAY SAINTS

Orem YSA 3rd 10 Ward Building
Orem UT YSA 3rd Stake
Approx. 1700 West 575 South
Vineyard, Utah 84059

Date: 15 AUG 2024
BHD #: 2344
County Parcel: 39228300
Plan Series: 2024 10 Ward SC
Owner #: 590-1876

Drawing Issue and Revision Schedule

#	Date	Description
1	15 Aug 2024	Bid Drawings

AUTOMATIC TEMPERATURE CONTROL PANELS

ME704

Printed 8/14/2024 4:16:15 PM © 2022 BHD Architects This document and the ideas and designs incorporated herein, as an instrument of professional service, are the property of BHD Architects, and may not be used or duplicated in whole or in part for any other project without written authorization of BHD Architects.

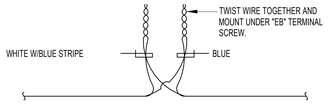

A E-BUS CONNECTION DETAIL

NO SCALE

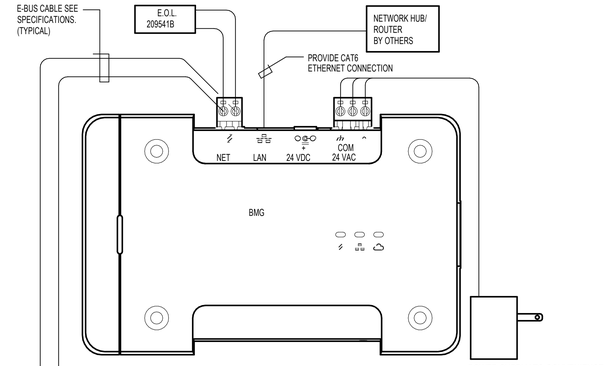

BUILDING MANAGEMENT GATEWAY (BMG)

E-BUS WIRING DIAGRAM

NO SCALE

© 2022 BHD Architects This document and the ideas and designs incorporated herein, as an instrument of professional service, are the property of BHD Architects, and may not be used or duplicated in whole or in part for any other project without written authorization of BHD Architects.

Printed 8/14/2024 4:16:15 PM

bhd ARCHITECTS
www.bhdarchitects.com
Phone 801.571.0010
Fax 801.571.0303
Toll Free 888.571.0010
65 East Wadsworth Park Drive
Suite 205 Draper, Utah 84020

PROFESSIONAL ENGINEER DAVID L. HANSEN Aug 15, 2024 STATE OF UTAH

Engineered Systems Associates
1355 EAST CENTER
POCATELLO, IDAHO 83201
PHONE: (208) 233-0501
FAX: (208) 233-0529
EMAIL:esa@engsystems.com
ESA JOB NUMBER: 24065

THE CHURCH OF JESUS CHRIST OF LATTER-DAY SAINTS

Orem YSA 3rd 10 Ward Building
Orem UT YSA 3rd Stake

Approx. 1700 West 575 South
Vineyard, Utah 84059

Date: 15 AUG 2024
BHD #: 2344
County Parcel: 39:228:0001
Plan Series: 2024 10 Ward SC
Owner #: 390-186

Drawing Issue and Revision Schedule

#	Description	Date
1	Bid Drawings	15 Aug 2024

AUTOMATIC TEMPERATURE CONTROL E-BUS WIRING DIAGRAM

ME704

GENERAL NOTES

1 SEE ME AND ET SHEETS FOR REQUIRED RACEWAY AND BOXES FOR TEMPERATURE CONTROL, TELEPHONE, DATA, SOUND, VIDEO, SATELLITE AND TV SYSTEMS.

2 OUTLETS ON EXTERIOR WALLS MUST BE PROVIDED WITH AIR TIGHT J-BOXES. SEAL AROUND ALL PENETRATIONS TO KEEP THE BOX AIR TIGHT.

KEYED NOTES

1 CIRCUIT EXHAUST FAN TO SAME CIRCUIT AS LIGHTS IN ROOM (ON LINE SIDE OF SWITCH) AND CONTROL WITH LINE VOLTAGE THERMOSTAT.
2 SPLIT WIRE SO UPPER HALF OF RECEPTACLE IS CONTROLLED BY LIGHT SWITCH AND LOWER HALF IN UNSWITCHED ON SAME CIRCUIT.
3 CIRCUIT EXHAUST FAN WITH THE ROOM LIGHTS AND CONTROL WITH OCCUPANCY SENSOR IN ROOM.
4 STUB CONDUIT INTO DOOR HEAD FRAME FOR INSTALLATION OF ACCESS CONTROL SYSTEM WIRING. RUN CONDUIT TO ACCESSIBLE LOCATION IN UPPER MECHANICAL SPACE AND TERMINATE IN BOX LABELED 'ACCESS CONTROL'.
5 LOCATE BOX SO DUPLEX RECEPTACLE CAN BE MOUNTED HORIZONTALLY IN HARDWOOD BASE.
6 REFER TO JA422 FOR MOUNTING OF DUPLEX RECEPTACLE AND DATA OUTLET ON SIDE OF PULPIT.
7 SEE 1/A401 FOR MOUNTING LOCATION OF RECEPTACLE IN PULPIT.
8 COORDINATE WITH ARCHITECTS DRAWING MOUNT RECEPTACLE ON THE VERTICAL WALL OF THE RECESSED ORGAN BOX. REFER TO 1/A401.
9 (2) 1" CONDUITS FROM JUNCTION BOX TO UPPER SHELF IN ORGAN SPEAKER CHAMBER.
10 CIRCUIT EXHAUST FAN WITH LIGHTS IN THIS ROOM AND CONTROL WITH MANUAL TIMER SWITCH.
11 LOCATE OUTLET SO RANGE WILL SIT TIGHT AGAINST WALL. WIRING TO RANGE TO BE 3#8,#10GR.
12 AUTOMATIC DOOR OPERATOR FURNISHED BY OTHERS. COORDINATE CONDUIT AND CONDUCTOR LENGTHS AND ROUTING FOR COMPLETE, CONCEALED INSTALLATION.
13 PROVIDE A 4" SQUARE 2-1/8" DEEP BOX FOR AUTOMATIC DOOR ACTIVATING SWITCH FURNISHED BY OTHERS. LEAVE EXTRA CONDUCTOR LENGTH FOR CONNECTION.
14 SEPARATE DEDICATED #6 GROUND. COORDINATE WITH TELECOMMUNICATIONS GROUND BUS BAR.

KEYED NOTES

15 INSTALL DUPLEX RECEPTACLE AT TELEPHONE BOARD AT 48" AFF. REFER TO A/V DRAWINGS.
16 OUTLET FOR BMS SERVER.
17 COORDINATE LOCATION OF DEVICES WITH DIVISION 27 PRIOR TO ROUGH-IN.
18 LINE VOLTAGE THERMOSTAT PROVIDED BY DIVISION 23 AND INSTALLED BY DIVISION 26.
19 LOCATE CONTROL CABLE BOX NEXT TO DUPLEX RECEPTACLE.
20 CABLE SHALL BE COPPER, INSULATED, TWISTED PAIR, STRANDED, 22 GAUGE, SHIELDED, ONE RED CONDUCTOR, ONE BLACK CONDUCTOR, WITH OUTSIDE JACKET.
21 LOCATE OUTLET WITHIN FOUR FEET OF MOTOR FOR BASKETBALL STANDARD. MAKE RECEPTACLE CONNECTIONS FOR BASKETBALL STANDARD PER MANUFACTURER REQUIREMENTS.
22 CONTROL SWITCH PROVIDED BY BASKETBALL STANDARD MANUFACTURER. MOUNT SWITCH AT +74" AFF.
23 PROVIDE LIGHTNING PROTECTION TO STEEPLE. SEE SPECIFICATIONS.
24 OUTLET MOUNTED IN THE AV JUNCTION BOX FOR TV MONITOR. COORDINATE LOCATION OF THE TV WITH THE OWNER. COORDINATE LOCATION WITH AV INSTALLER.
25 PROVIDE 4" SQUARE BOX WITH SINGLE GANG MUD RING WITH 0.5" ENT CONDUIT TO THE EQUIPMENT PLATFORM (OVER WALKWAY). PROVIDE PULL STRING IN CONDUIT.

1 MAIN FLOOR POWER PLAN
1/8" = 1'-0"

bhd ARCHITECTS
www.bhdarchitects.com
Phone 801.571.0010
Fax 801.571.0303
Toll Free 888.571.0010
45 East Wadsworth Park Drive
Suite 205 Draper, Utah 84020

LICENSED PROFESSIONAL ENGINEER
No. 5148728
DAVID G. HINCKLEY
8-19-24
STATE OF UTAH

SPECTRUM ENGINEERS
324 S. State St., Suite 400
Salt Lake City, UT 84111
801-328-3181
801-328-5151
fax: 801-328-5155
www.spectrum-engineers.com

THE CHURCH OF JESUS CHRIST OF LATTER-DAY SAINTS

Orem YSA 3rd 10 Ward Building
Orem UT YSA 3rd Stake

Approx. 1700 West 575 South
Vineyard, Utah 84059

Date: 19 Aug 2024
Scale: As indicated
Drawn By: Author
Checked By: Checker
Owner #: 240504

Drawing Issue and Revision Schedule		
#	Date	Description
1	19 Aug 2024	Bid Documents

Power Plan

E101

Autodesk Docs://240504 - Orem YSA 3rd 10 Ward Stake Center/240504-Elec Central.rvt
8/19/2024 9:10:18 PM

KEYED NOTES

1. SEE C/A152 FOR MOUNTING OF COVE LIGHT FIXTURES.
2. SEE ME AND ET SHEETS FOR REQUIRED RACEWAY AND BOXES FOR TEMPERATURE CONTROL, TELEPHONE, DATA, SOUND, VIDEO, SATELLITE, AND TV SYSTEMS.
3. REFER TO EQUIPMENT SCHEDULE ON SHEET E601 FOR MECHANICAL EQUIPMENT FEEDER INFORMATION.
4. VERIFY MECHANICAL EQUIPMENT AND LOCATIONS WITH MECHANICAL DRAWINGS.
5. PROVIDE DUAL-LITE LG-250-S-I OR EQUAL. CIRCUIT MS-2 SHALL PASS THROUGH THIS INVERTER THEN SPLIT TO FEED EXTERIOR LIGHTING (WITH FIXTURES NOTED "TO INVERTER" TO BE FED FROM INVERTER THROUGH THE RELAY PANEL AND FIXTURES NOTED "TO RELAY PANEL" TO BE FED FROM THE RELAY PANEL AND NOT THE INVERTER.
6. PROVIDE 3-ZONE ROOM CONTROLLER CAPABLE OF RECEIVING DAYLIGHT PHOTOCELL, OCCUPANCY, AND MANUAL DIMMER SWITCH INPUTS. ALL ZONES SHALL SHUT OFF AUTOMATICALLY WHEN THERE IS NO OCCUPANCY IN THE ROOM. ZONE 1 SHALL BE CONTROLLED BY MANUAL DIMMER SWITCH. ZONE 2 SHALL BE CONTROLLED BY BOTH DAYLIGHT SENSOR AND MANUAL DIMMER SWITCH.
7. PROVIDE 1-ZONE ROOM CONTROLLER CAPABLE OF RECEIVING OCCUPANCY AND MANUAL DIMMER SWITCH INPUTS. ALL ZONES SHALL SHUT OFF AUTOMATICALLY WHEN THERE IS NO OCCUPANCY IN THE ROOM.
8. PROVIDE FIRE ALARM WIRELESS COMMUNICATOR (DSC 3G4010-CF) AND PROVIDE INTERCONNECT WIRING BACK TO FIRE ALARM PANEL.
9. SEE B/A152 FOR MOUNTING OF COVE LIGHT FIXTURES.
10. PROVIDE 90 MINUTE BATTERY BACKUP FOR FIXTURE.
11. COORDINATE PLACEMENT OF PANELS W/ MECHANICAL EQUIPMENT/DUCTWORK PRIOR TO ROUGH-IN.

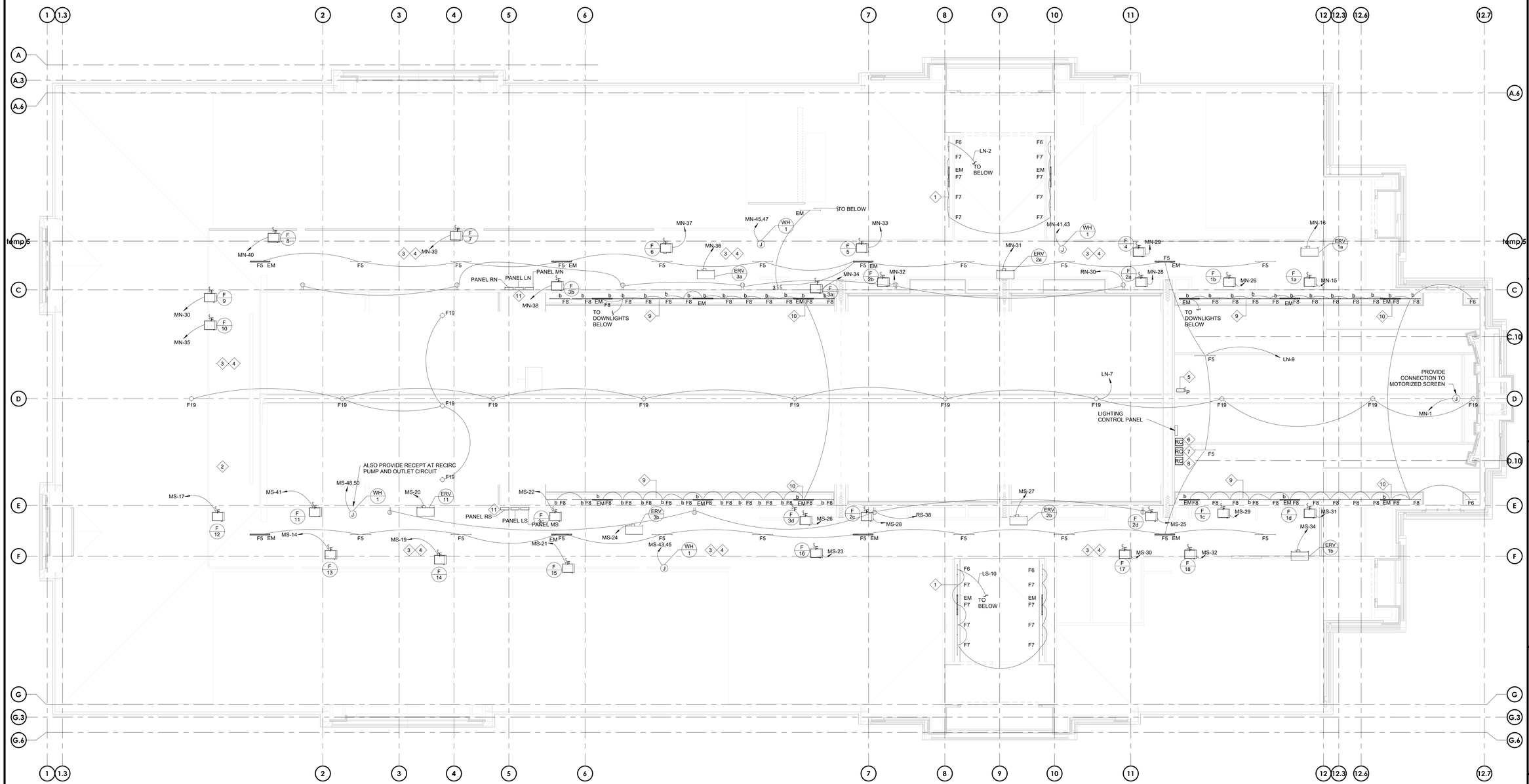

1 EQUIPMENT PLATFORM ELECTRICAL PLAN
1/8" = 1'-0"

bhd ARCHITECTS
www.bhdarchitects.com
Phone 801.571.0010
Fax 801.571.0303
Toll Free 888.571.0010
65 East Wadsworth Park Drive
Suite 205 Draper, Utah 84020

LICENSED PROFESSIONAL ENGINEER
No. 5148728
DAVID G. HINCKLEY
8-19-24
STATE OF UTAH

SPECTRUM ENGINEERS
324 S. State St., Suite 400
Salt Lake City, UT 84111
800-678-7077
801-328-5151
fax: 801-328-5155
www.spectrum-engineers.com

THE CHURCH OF JESUS CHRIST OF LATTER-DAY SAINTS

Orem YSA 3rd 10 Ward Building
Orem UT YSA 3rd Stake

Approx. 1700 West 575 South
Vineyard, Utah 84059

Owner #: 370-187s
Plan Series: 2024 10 Ward SC
County Parcel: 37:226:0301
BID #: 2344
Date: 15 Aug 2024

Drawing Issue and Revision Schedule

#	Date	Description
1	15 Aug 2024	Bid Documents

Equipment Platform Electrical Plan

E102

Autodesk Docs://240504 - Orem YSA 3rd 10 Ward Stake Center/240504-Elec Central.rvt
8/19/2024 9:02:50 PM

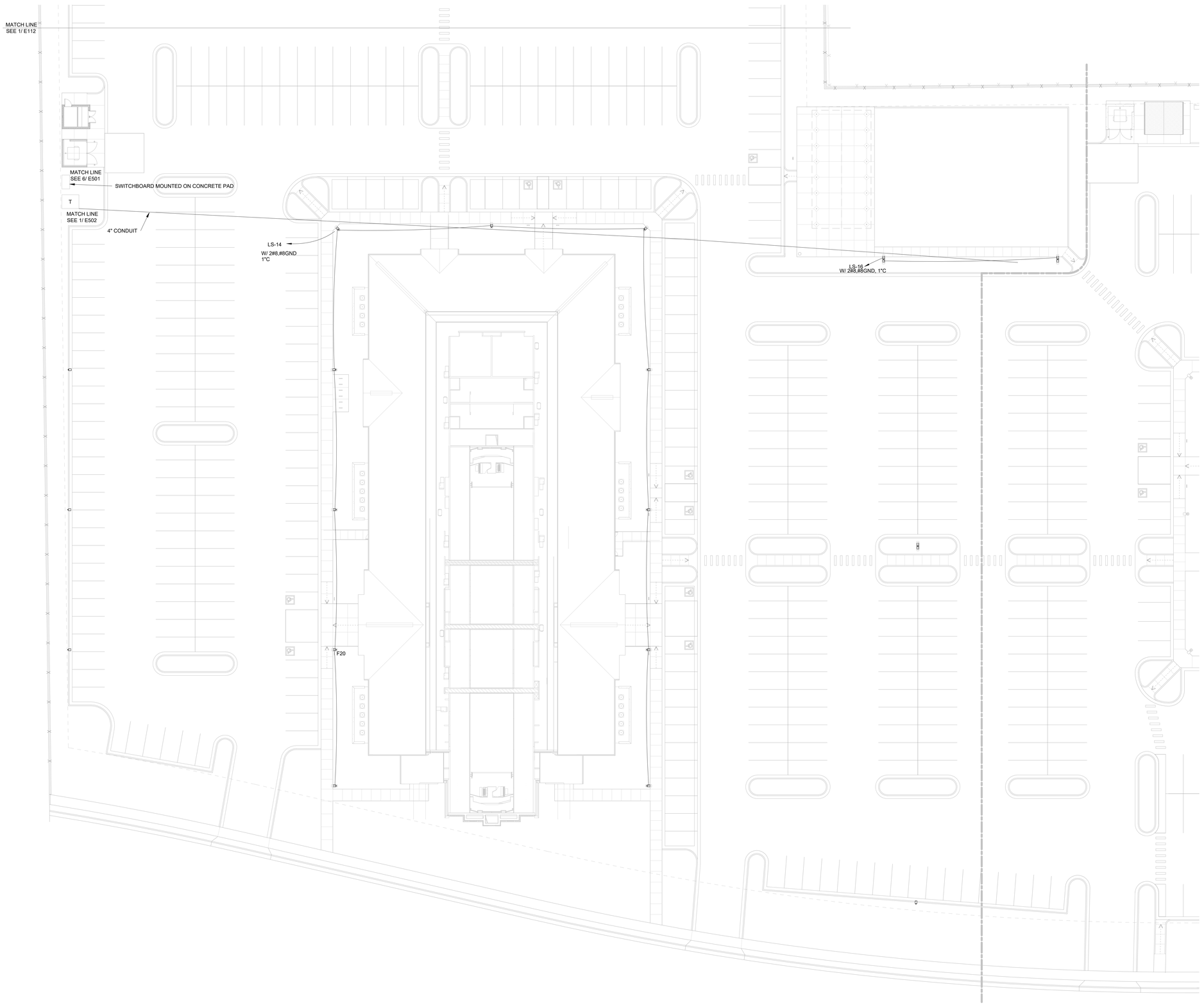

GENERAL SHEET NOTES

1 THE ELECTRICAL CONTRACTOR SHALL MEET WITH AND COORDINATE WITH ALL SERVICE PROVIDERS (POWER, COMMUNICATION, CABLE/SATELLITE, ETC.) TO THE FACILITY ON SITE PRIOR TO ANY WORK BEING PREFORMED. CONFIRM WITH EACH SERVICE PROVIDER EXACT LOCATIONS OF EQUIPMENT AND ROUTING. COMPLY WITH ALL SERVICE PROVIDER'S CURRENT STANDARDS AND REQUIREMENTS. PROVIDE THE REQUIRED EQUIPMENT, RACEWAYS, BOXES, CABLE, ETC. AS REQUIRED BY THE SERVICE PROVIDER WHETHER SHOWN ON THE DRAWINGS OR NOT.

2 FOR ALL LIGHT FIXTURES, POLE LIGHTS, AND ALL OTHER ELECTRICAL DEVICES THE CONTRACTOR SHALL COORDINATE EXACT LOCATION AND MOUNTING HEIGHTS WITH ARCHITECT, OWNER, ENGINEER, AND ALL OF THE CONTRACT DOCUMENTS PRIOR TO ROUGH IN AND TRENCHING.

3 CONTRACTOR IS RESPONSIBLE FOR ALL TRENCHING, BACKFILL, AND COMPACTION ASSOCIATED TO ALL ELECTRICAL UNDERGROUND RACEWAYS AND CABLES. COORDINATE WITH ARCHITECTURAL AND CIVIL DRAWINGS. SEE UNDERGROUND RACEWAY DETAILS FOR REQUIREMENTS FOR EACH TRENCH.

4 CONTRACTOR SHALL INSTALL POLE MOUNTED LIGHTS IN STRAIGHT LINES, SQUARE, AND PLUMB. COORDINATE WITH ARCHITECT AND CIVIL DRAWINGS.

5 THE ELECTRICAL CONTRACTOR SHALL HAVE ANY AND ALL CONCRETE POLE BASES AND SLABS REVIEWED BY A STRUCTURAL ENGINEER AND SHALL MODIFY DESIGN PER STRUCTURAL ENGINEER'S AND OR AHJ'S RECOMMENDATIONS.

6 PROVIDE BATTERY PACKS IN ALL EXTERIOR FIXTURES ADJACENT TO EGRESS DOORS.

7 PROVIDE PHOTOCELL ON NORTH SIDE OF FACILITY TO CONTROL EXTERIOR LIGHTS.

8 ALL EXTERIOR RECEPTACLES SHOWN SHALL BE NEMA 5-20R GFCI "WEATHER RESISTANT" RECEPTACLE WITH "WEATHER PROOF IN-USE COVER. "

9 THE ELECTRICAL CONTRACTOR IS RESPONSIBLE FOR ALL CONCRETE/ASPHALT CUTTING AND REPLACEMENT OF CONCRETE/ASPHALT TO MATCH EXISTING ASSOCIATED WITH UNDERGROUND RACEWAYS PROVIDED AS PART OF THIS PROJECT.

10 REFER TO PLANS FOR CONSTRAINTS ON PHYSICAL DIMENSIONS AND CLEARANCE REQUIREMENTS OF EQUIPMENT. PROVIDE EQUIPMENT DIMENSIONS THAT FALL WITHIN THE CONSTRAINTS OF EACH SPECIFIC LOCATION.

11 PROVIDE SERVICE RATED EQUIPMENT AT EACH SERVICE ENTRANCE.

12 SERVICE EQUIPMENT SHALL BE LEGIBLY MARKED IN THE FIELD WITH THE MAXIMUM AVAILABLE FAULT CURRENT. VERIFY OR RE-CALCULATE THE AVAILABLE FAULT CURRENT AT THE SERVICE WHERE MODIFICATIONS TO THE ELECTRICAL INSTALLATION OCCUR. PLEASE INCLUDE NOTES IN THE ELECTRICAL DRAWINGS OR SUPPLY CALCULATIONS WHERE APPLICABLE. SEE NEC 110.24. (B)

1 ELECTRICAL SITE PLAN - SOUTH
1" = 20'-0"

bhd ARCHITECTS
www.bhdarchitects.com
Phone 801.571.0010
Fax 801.571.0303
Toll Free 888.571.0010
65 East Wadsworth Park Drive
Suite 205 Draper, Utah 84020

LICENSED PROFESSIONAL ENGINEER
No. 5148728
DAVID G. HINCKLEY
8-19-24
STATE OF UTAH

SPECTRUM ENGINEERS
324 S. State St., Suite 400
Salt Lake City, UT 84111
800-678-7077
801-328-5151
fax: 801-328-5155
www.spectrum-engineers.com

THE CHURCH OF JESUS CHRIST OF LATTER-DAY SAINTS

Orem YSA 3rd 10 Ward Building
Orem UT YSA 3rd Stake

Approx. 1700 West 575 South
Vineyard, Utah 84059

Date: 15 Aug 2024
BIID #: 2344
County Parcel: 37-226-0001
Plan Series: 2024 10 Ward SC
Owner #: 390-1816

Drawing Issue and Revision Schedule

#	Date	Description
1	15 Aug 2024	Bid Documents

Electrical Site Plan - South

E111

Autodesk Docs://240504 - Orem YSA 3rd 10 Ward Stake Center/240504-Elec Central.rvt
8/19/2024 9:02:53 PM

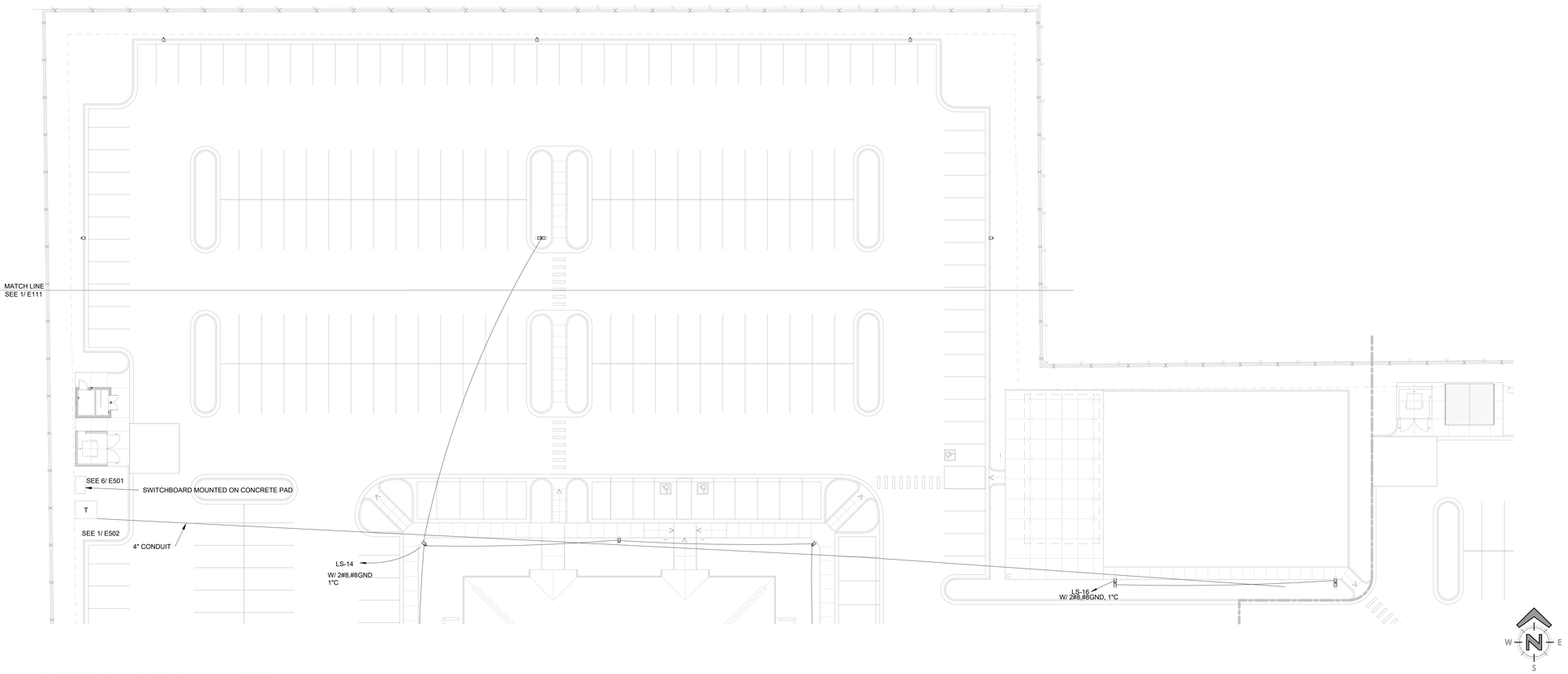

1 ELECTRICAL SITE PLAN - NORTH
1" = 20'-0"

bhd ARCHITECTS
www.bhdarchitects.com
Phone 801.571.0010
Fax 801.571.0303
Toll Free 888.571.0010
65 East Wadsworth Park Drive
Suite 205 Draper, Utah 84020

LICENSED PROFESSIONAL ENGINEER
No. 5148728
DAVID G. HINCKLEY
8-19-24
STATE OF UTAH

SPECTRUM ENGINEERS
324 S. State St., Suite 400
Salt Lake City, UT 84111
800-678-7077
801-328-5151
fax: 801-328-5155
www.spectrum-engineers.com

THE CHURCH OF JESUS CHRIST OF LATTER-DAY SAINTS

Orem YSA 3rd 10 Ward Building
Orem UT YSA 3rd Stake

Approx. 1700 West 570 South
Vineyard, Utah 84059

Date: 13 Aug 2024
BHD #: 2344
County Parcel: 97-228-0001
Plan Series: 2024 10 Ward SC
Owner #: 590-18-6

Drawing Issue and Revision Schedule

#	Date	Description
1	13 Aug 2024	Bid Documents

Electrical Site Plan - North

E112

Autodesk Docs://240504 - Orem YSA 3rd 10 Ward Stake Center/240504-Elec Central.rvt
8/19/2024 9:02:56 PM

GENERAL NOTES

1. SEE ME SHEETS FOR ELECTRICAL WORK FOR CONTROLS.
2. EXACT LOCATION OF LIGHT FIXTURES SHALL BE AS SHOWN ON REFLECTED CEILING PLAN SHEET A151.
3. CEILING MOUNTED OCCUPANCY SENSORS SHALL NOT BE INSTALLED WITHIN 6 FEET OF ANY MECHANICAL DIFFUSER.
4. LOWER CASE LETTERS ON OR NEAR FIXTURES INDICATE CONTROLLING SWITCHES. SWITCH LEGS NOT ALWAYS SHOWN.
5. SEE SHEET E601 FOR ELECTRICAL SYMBOLS LEGEND.
6. FOR RECESSED LIGHTING IN HALLWAYS AND RESTROOMS, DO NOT CUT JOISTS. ROTATE FIXTURES IF REQUIRED.

KEYED NOTES

1. PROVIDE SUFFICIENT BOX DEPTH AND CORRECT PLASTER RING TO ACCOMMODATE ACTUAL RELAY UNIT AND OCCUPANCY SENSOR INSTALLED. ALSO PROVIDE PROPER SEPARATION OF 120V AND CLASS 2 WIRING AS NECESSARY IN ACCORDANCE WITH NEC SET SENSITIVITY AND TIME DELAY OF SENSOR AT MAXIMUM.
2. FIXTURE TO BE ON CONTINUOUSLY (NOT SWITCHED).
3. SEE DETAIL 3/E501 FOR SWITCH LABELING.
4. CIRCUIT THROUGH THE LIGHTING CONTROL PANEL. SEE EXTERIOR LIGHTING CONTROL DIAGRAM SHEET E605.
5. CIRCUIT THIS FIXTURE THROUGH INVERTER AS WELL AS RELAY PANEL.
6. SEE DETAIL 2/E501 FOR SWITCH LABELING.
7. PROVIDE WIRE GUARD.
8. PROVIDE MOMENTARY SWITCH TO CONTROL LIGHTING TIED TO OCCUPANCY SENSOR. WIRE TO OCCUPANCY SENSOR OR POWER PACK (DEPENDING ON MANUFACTURER).
9. PROVIDE TWO ZONE ROOM CONTROLLER. HIGH-BAY OCCUPANCY SENSORS SHALL TIE INTO ROOM CONTROLLER. MULTI-BUTTON SWITCHES SHALL CONTROL ZONES SHOWN ON E501.
10. PROVIDE THREE ZONE ROOM CONTROLLER. HIGH-BAY OCCUPANCY SENSORS SHALL TIE INTO ROOM CONTROLLER. MULTI-BUTTON SWITCHES SHALL CONTROL ZONES SHOWN ON E501.
11. TO SWITCHED OUTLETS, SEE SHEET E101.
12. TO COVE LIGHTS, SEE SHEET E102.

1 MAIN FLOOR LIGHTING PLAN
1/8" = 1'-0"

0 4' 8" 16'

bhd ARCHITECTS
www.bhdarchitects.com
Phone 801.571.0010
Fax 801.571.0303
Toll Free 888.571.0010
65 East Wadsworth Park Drive
Suite 205 Draper, Utah 84020

LICENSED PROFESSIONAL ENGINEER
No. 5148728
DAVID G. HINCKLEY
8-19-24
STATE OF UTAH

SPECTRUM ENGINEERS
324 S. State St., Suite 400
Salt Lake City, UT 84111
800-678-7077
801-328-5151
fax: 801-328-5155
www.spectrum-engineers.com

THE CHURCH OF JESUS CHRIST OF LATTER-DAY SAINTS

Orem YSA 3rd 10 Ward Building
Orem UT YSA 3rd Stake

Approx. 1700 West 575 South
Vineyard, Utah 84059

Owner #: 350-1876
Plan Series: 2024 10 Ward SC
County Parcel: 37:228:0001
BHD #: 2344
Date: 13 Aug 2024

Drawing Issue and Revision Schedule		
#	Date	Description
1	13 Aug 2024	Bid Documents

Lighting Plan

E151

Autodesk Docs://240504 - Orem YSA 3rd 10 Ward Stake Center/240504-Elec Central.rvt
8/19/2024 9:03:03 PM

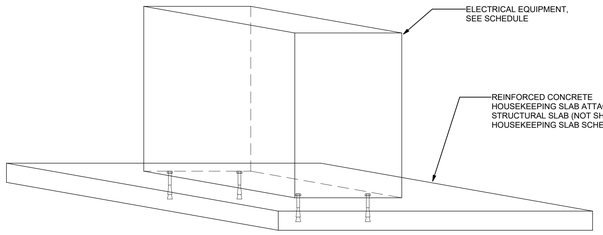

ISOMETRIC VIEW

HOUSEKEEPING SLAB SCHEDULE							
LENGTH (in)	THICKNESS (in)	BAR SIZE (#)	QUANTITY	SPACING (in o.c.)	COVER (in)	SLAB ANCHOR DIAMETER	ANCHOR QTY (B) & # ROWS (R)
24	4	3	2	21	1.5	3/8"	2B, 2R
36	4	3	3	16	1.5	3/8"	3B, 2R
48	4	3	4	15	1.5	3/8"	3B, 3R
60	4	3	5	14	1.5	3/8"	4B, 3R
72	6	4	5	17	1.5	1/2"	5B, 3R
84	6	4	6	16	1.5	1/2"	6B, 3R
96	6	4	6	18	1.5	1/2"	6B, 4R
108	6	4	7	17	1.5	1/2"	7B, 4R

NOTE:
1. EDGE DISTANCE (ED) = 6" UNLESS NOTED OTHERWISE.
2. FOR REINFORCING IN THE WIDTH DIRECTION REFER TO SCHEDULE ABOVE AND SUBSTITUTE WIDTH DIMENSION FOR THE LENGTH.
3. ALL REINFORCING IS TO BE TIED IN PLACE AND CHAIRED TO THE CORRECT HEIGHT (CENTER OF SLAB) PRIOR TO PLACING CONCRETE.
4. ICC APPROVED WEDGE ANCHOR BOLTS SHALL BE EQUALLY SPACED AND EMBEDDED 3" MIN. INTO STRUCTURAL SLAB. BOLTS SHALL PROTRUDE FROM SLAB A MIN. OF 2" AND SHALL HAVE DOUBLE NUT WITH FLAT WASHER BETWEEN. ALL ANCHORS BOLTS SHALL BE INSIDE THE PERIMETER REINFORCING STEEL.
5. **THIS SCHEDULE OF FOR BIDDING PURPOSES ONLY!** THE ACTUAL HOUSEKEEPING SLAB DESIGN AND REINFORCING SHALL BE SUBMITTED VIA DEFERRED SUBMITTAL BY THE CONTRACTOR UNLESS NOTED OTHERWISE.
6. 3000 PSI CONCRETE STRENGTH AT 28 DAYS MIN UNLESS NOTED OTHERWISE
7. STRUCTURAL SLAB DESIGN PER OTHERS. DO NOT CUT OR DAMAGE POST TENSION CABLES OR SLAB REINFORCING. VERIFY WITH STRUCTURAL ENGINEER

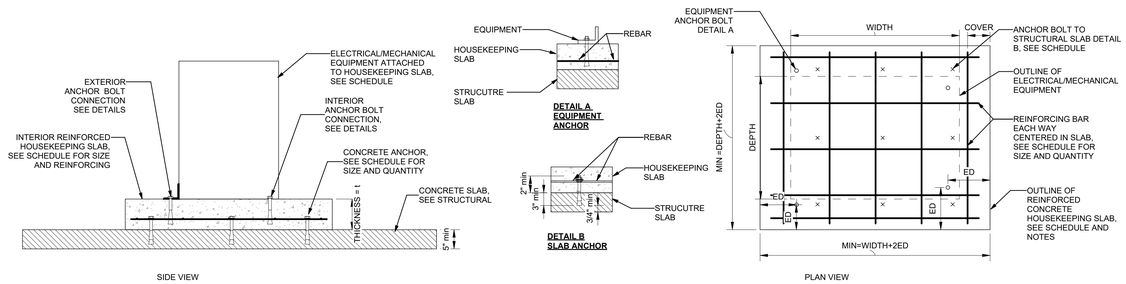

SIDE VIEW

PLAN VIEW

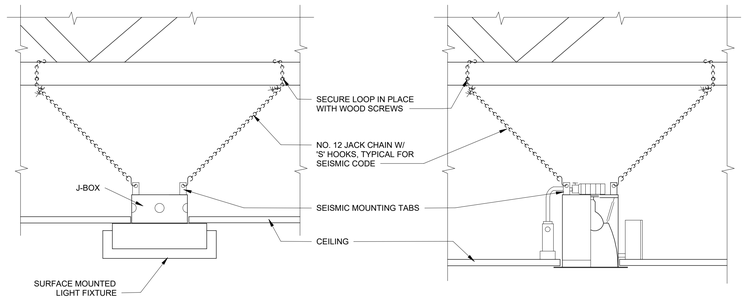

1 LIGHT FIXTURE SEISMIC BRACING
NOT TO SCALE

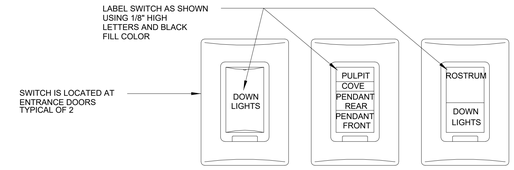

2 CHAPEL LIGHT SWITCH COVER PLATE DETAIL
NOT TO SCALE



3 CULTURAL HALL LIGHT SWITCH COVER PLATE DETAIL
NOT TO SCALE

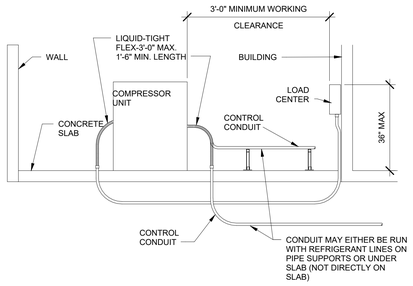

4 COMPRESSOR UNIT CONDUIT DETAIL
NOT TO SCALE

NOTES

1. SEE SHEETS A206 AND A207 FOR REQUIRED LIGHTNING PROTECTION SYSTEM. COORDINATE CONNECTION TO THE STEEPLE WITH THE GENERAL CONTRACTOR AND STEEPLE SUPPLIER. MAKE ALL REQUIRED CONNECTIONS FOR A COMPLETE LIGHTING PROTECTION SYSTEM.
2. SUPPORT LIGHTNING CABLES EVERY THREE FEET ALONG ENTIRE RUN USING SPECIFIED FASTENERS.
3. BOND METAL BODIES INTO SYSTEM AS REQUIRED.
4. FURNISH AND INSTALL SURGE PROTECTION DEVICE (SPD) FOR MAIN ELECTRICAL PANEL. REFER TO SPECIFICATIONS.
5. ELECTRICAL CONTRACTOR SHALL COORDINATE ALL CONNECTION REQUIREMENTS TO THE STEEPLE WITH THE GENERAL CONTRACTOR AND STEEPLE SUPPLIER. ELECTRICAL CONTRACTOR SHALL BE ON SITE WHEN THE STEEPLE IS INSTALLED AND MAKE ALL REQUIRED CONNECTIONS TO THE LIGHTNING PROTECTION SYSTEM.
6. REFER TO THE SPECIFICATIONS FOR ADDITIONAL INFORMATION AND REQUIREMENTS.
7. REFER TO THE SPECIFICATIONS FOR FITTING REQUIREMENTS.

LEGEND

- A — GROUND ROD
- B — SMOOTH TWIST COPPER CABLE
- C — COPPER LOOP FASTENER
- D — LARGE BRONZE CLAMP
- E — PERPENDICULAR GROUND ROD AND CABLE CLAMP
- F — GROUND INSPECTION WELL

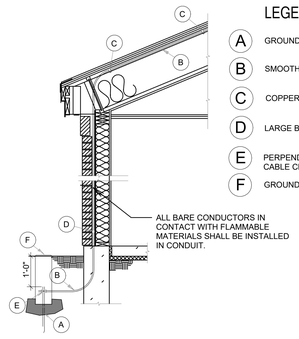

P CABLE INSTALLATION DETAIL
SCALE: 1/2" = 1'-0"

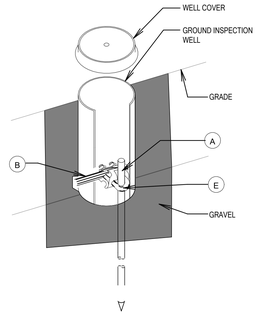

R GROUND INSPECTION WELL
NOT TO SCALE

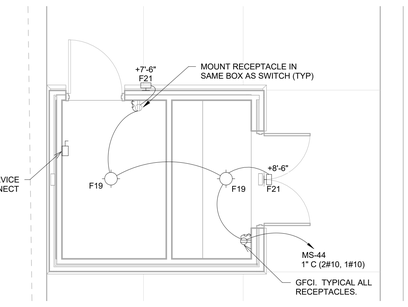

5 STORAGE BUILDING ELECTRICAL PLAN
1/4" = 1'-0"

bhd ARCHITECTS
www.bhdarchitects.com
Phone 801.571.0010
Fax 801.571.0303
Toll Free 888.571.0010
65 East Wadsworth Park Drive
Suite 205 Draper, Utah 84020

LICENSED PROFESSIONAL ENGINEER
No. 5148728
DAVID G. HINCKLEY
8-19-24
STATE OF UTAH

SPECTRUM ENGINEERS
324 S. State St., Suite 400
Salt Lake City, UT 84111
800-678-7077
801-328-5151
fax: 801-328-5155
www.spectrum-engineers.com

THE CHURCH OF JESUS CHRIST OF LATTER-DAY SAINTS

Orem YSA 3rd 10 Ward Building
Orem UT YSA 3rd Stake

Approx. 1700 West 575 South
Vineyard, Utah 84059

Owner #: 376-1816
Plan Series: 2024 10 Ward SC
County Parcel: 37:228:0001
BID #: 2344
Date: 15 Aug 2024

Drawing Issue and Revision Schedule

#	Date	Description
1	15 Aug 2024	Bid Documents

Electrical Details

E501

Autodesk Docs://240504 - Orem YSA 3rd 10 Ward Stake Center/240504-Elec Central.rvt
8/19/2024 9:03:05 PM

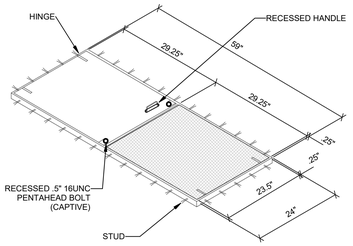

FIGURE 3 - ACCESS DOOR DETAIL

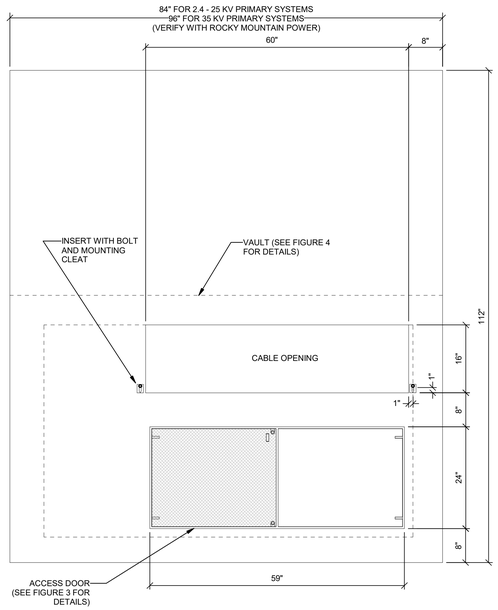

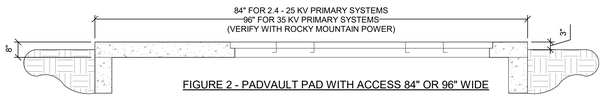

FIGURE 2 - PADVAULT PAD WITH ACCESS 84" OR 96" WIDE

2.4 - 25kV, 3-PHASE TRANSFORMER PADVAULT WITH ACCESS, STOCK ITEM 7992600-STOCK ITEM 1790023

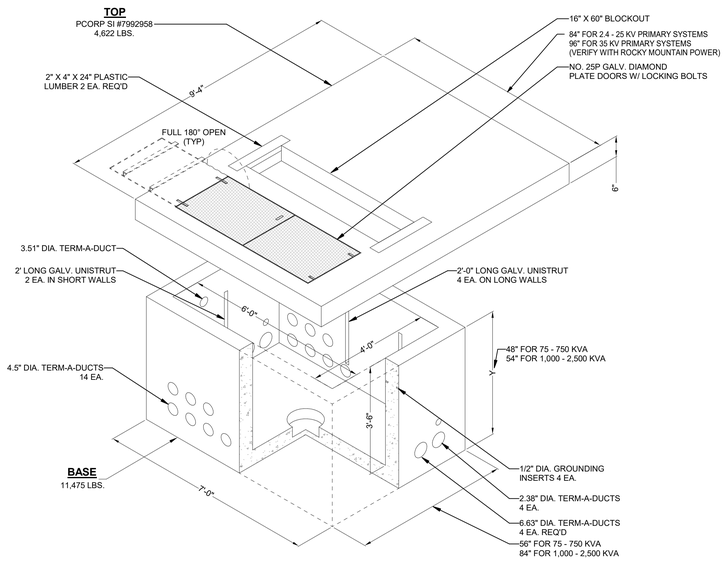

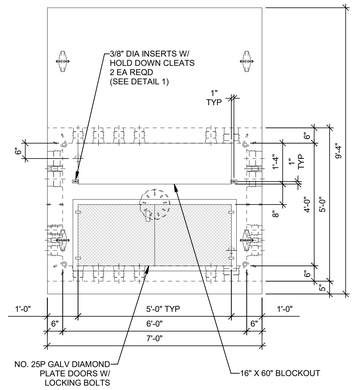

PLAN VIEW
2.4-25 kV, 3-PHASE TRANSFORMER PADVAULT WITH ACCESS
PCORP #7992600 - SI #1790023

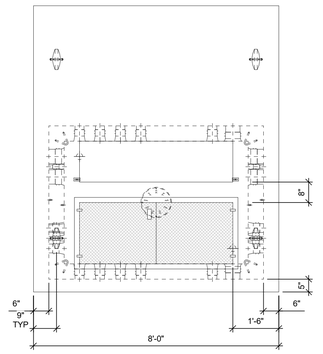

PLAN VIEW
35 kV, 3-PHASE TRANSFORMER PADVAULT WITH ACCESS
PCORP #7992602 - SI #1008977

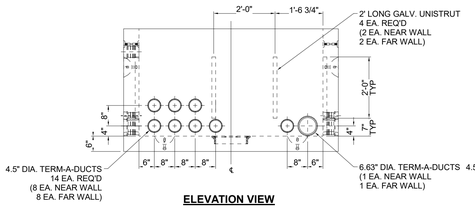

ELEVATION VIEW

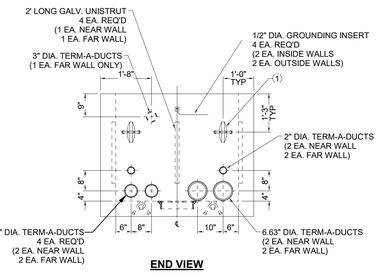

END VIEW

*LIFTING DEVICE TYPE & LOCATION MAY CHANGE WITHOUT NOTICE.

NOTE: PRIOR TO ORDERING AND INSTALLING THE PADVAULT, SUBMIT PADVAULT TO ROCKY MOUNTAIN POWER FOR APPROVAL AND VERIFICATION, AND COORDINATE EXACT SIZE AND LOCATION OF DUCT OPENINGS WITH ROCKY MOUNTAIN POWER.

bhd ARCHITECTS
www.bhdarchitects.com
Phone 801.571.0010
Fax 801.571.0303
Toll Free 888.571.0010
65 East Wadsworth Park Drive
Suite 205 Draper, Utah 84020

LICENSED PROFESSIONAL ENGINEER
No. 5148728
DAVID G. HINCKLEY
8-19-24
STATE OF UTAH

SPECTRUM ENGINEERS
324 S. State St., Suite 400
Salt Lake City, UT 84111
801-328-5151
fax: 801-328-5155
www.spectrum-engineers.com

THE CHURCH OF JESUS CHRIST OF LATTER-DAY SAINTS

Orem YSA 3rd 10 Ward Building
Orem UT YSA 3rd Stake

Approx. 1700 West 575 South
Vineyard, Utah 84059

Date: 8/19/2024
Drawn By: BMS
Project #: 23-0001
Plan Notes: Jeff Thorn,SC
County Permit: 2024-000001
Owner #: 0001-001

Drawing Issue and Revision Schedule

#	Date	Description
1	15-Aug-2024	Bid Documents

ROCKY MOUNTAIN POWER PAD VAULT

E502

Autodesk Docs://240504 - Orem YSA 3rd 10 Ward Stake Center/240504-Elec Central.rvt
8/19/2024 9:08:55 PM

Compressor Unit Circuiting Schedule

Load Name	Wire Size	Wire Type	Breaker Rating	Apparent Current
CONDENSING UNIT CU-1a	1-#8, 1-#8, 1-#10	Cu THHN	50 A	22 A
CONDENSING UNIT CU-1b	1-#8, 1-#8, 1-#10	Cu THHN	50 A	22 A
CONDENSING UNIT CU-1c	1-#8, 1-#8, 1-#10	Cu THHN	50 A	22 A
CONDENSING UNIT CU-1d	1-#8, 1-#8, 1-#10	Cu THHN	50 A	22 A
CONDENSING UNIT CU-2a	1-#8, 1-#8, 1-#10	Cu THHN	50 A	22 A
CONDENSING UNIT CU-2b	1-#8, 1-#8, 1-#10	Cu THHN	50 A	22 A
CONDENSING UNIT CU-2c	1-#8, 1-#8, 1-#10	Cu THHN	50 A	22 A
CONDENSING UNIT CU-2d	1-#8, 1-#8, 1-#10	Cu THHN	50 A	22 A
CONDENSING UNIT CU-3a	1-#8, 1-#8, 1-#10	Cu THHN	50 A	22 A
CONDENSING UNIT CU-3b	1-#8, 1-#8, 1-#10	Cu THHN	50 A	22 A
CONDENSING UNIT CU-3c	1-#8, 1-#8, 1-#10	Cu THHN	50 A	22 A
CONDENSING UNIT CU-3d	1-#8, 1-#8, 1-#10	Cu THHN	50 A	22 A
CONDENSING UNIT CU-4	1-#8, 1-#8, 1-#10	Cu THHN	50 A	22 A
CONDENSING UNIT CU-5	1-#10, 1-#10, 1-#10	Cu THHN	50 A	18 A
CONDENSING UNIT CU-6	1-#10, 1-#10, 1-#10	Cu THHN	35 A	18 A
CONDENSING UNIT CU-7	1-#10, 1-#10, 1-#10	Cu THHN	35 A	18 A
CONDENSING UNIT CU-8	1-#10, 1-#10, 1-#10	Cu THHN	35 A	18 A
CONDENSING UNIT CU-9	1-#10, 1-#10, 1-#10	Cu THHN	35 A	18 A
CONDENSING UNIT CU-10	1-#10, 1-#10, 1-#10	Cu THHN	35 A	18 A
CONDENSING UNIT CU-11	1-#6, 1-#6, 1-#10	Cu THHN	60 A	28 A
CONDENSING UNIT CU-12	1-#10, 1-#10, 1-#10	Cu THHN	35 A	18 A
CONDENSING UNIT CU-13	1-#10, 1-#10, 1-#10	Cu THHN	35 A	18 A
CONDENSING UNIT CU-14	1-#10, 1-#10, 1-#10	Cu THHN	35 A	18 A
CONDENSING UNIT CU-15	1-#10, 1-#10, 1-#10	Cu THHN	35 A	18 A
CONDENSING UNIT CU-16	1-#10, 1-#10, 1-#10	Cu THHN	35 A	18 A
CONDENSING UNIT CU-17	1-#10, 1-#10, 1-#10	Cu THHN	35 A	18 A
CONDENSING UNIT CU-18	1-#10, 1-#10, 1-#10	Cu THHN	35 A	18 A

Exhaust Fan Circuiting Schedule

Load Name	Watts	# of Runs	Wire Size	Wire Type	Breaker Rating	Comments
LTS-RMS,SERV,EF		1		Cu THHN	20 A	
LTS-RMS,CUST,EF		1		Cu THHN	20 A	
LTS-MN,WN,EF		1		Cu THHN	20 A	
LTS-RMS,SERV,EF		1		Cu THHN	20 A	
LTS-BP,CK,TCH,EF		3		Cu THHN	20 A	

Energy Recovery Units Circuiting Schedule

Load Name	# of Runs	Wire Size	Wire Type	Breaker Rating	Apparent Load
ERV-1a	2	1-#10, 1-#10, 1-#10	Cu THHN	25 A	2064 VA
ERV-1b	2	1-#10, 1-#10, 1-#10	Cu THHN	25 A	2064 VA
ERV-2a	2	1-#10, 1-#10, 1-#10	Cu THHN	25 A	2064 VA
ERV-2b	2	1-#10, 1-#10, 1-#10	Cu THHN	25 A	2064 VA
ERV-3a	1	1-#10, 1-#10, 1-#10	Cu THHN	25 A	2064 VA
ERV-3b	1	1-#10, 1-#10, 1-#10	Cu THHN	25 A	2064 VA
ERV-11	1	1-#10, 1-#10, 1-#10	Cu THHN	25 A	2064 VA

Fan Circuiting Schedule

Load Name	Wire Size	Wire Type	Breaker Rating	True Current
FAN F-1a	1-#12, 1-#12, 1-#12	Cu THHN	20 A	10 A
FAN F-1b	1-#12, 1-#12, 1-#12	Cu THHN	20 A	10 A
FAN F-1c	1-#12, 1-#12, 1-#12	Cu THHN	20 A	10 A
FAN F-1d	1-#12, 1-#12, 1-#12	Cu THHN	20 A	10 A
FAN F-2a	1-#12, 1-#12, 1-#12	Cu THHN	20 A	10 A
FAN F-2b	1-#12, 1-#12, 1-#12	Cu THHN	20 A	10 A
FAN F-2c	1-#12, 1-#12, 1-#12	Cu THHN	20 A	10 A
FAN F-2d	1-#12, 1-#12, 1-#12	Cu THHN	20 A	10 A
FAN F-3a	1-#12, 1-#12, 1-#12	Cu THHN	20 A	10 A
FAN F-3b	1-#12, 1-#12, 1-#12	Cu THHN	20 A	10 A
FAN F-3c	1-#12, 1-#12, 1-#12	Cu THHN	20 A	10 A
FAN F-3d	1-#12, 1-#12, 1-#12	Cu THHN	20 A	10 A
FAN F-4	1-#12, 1-#12, 1-#12	Cu THHN	20 A	10 A
FAN F-5	1-#12, 1-#12, 1-#12	Cu THHN	20 A	7 A
FAN F-6	1-#12, 1-#12, 1-#12	Cu THHN	20 A	7 A
FAN F-7	1-#12, 1-#12, 1-#12	Cu THHN	20 A	7 A
FAN F-8	1-#12, 1-#12, 1-#12	Cu THHN	20 A	7 A
FAN F-9	1-#12, 1-#12, 1-#12	Cu THHN	20 A	7 A
FAN F-10	1-#12, 1-#12, 1-#12	Cu THHN	20 A	7 A
FAN F-11	1-#12, 1-#12, 1-#12	Cu THHN	20 A	7 A
FAN F-12	1-#12, 1-#12, 1-#12	Cu THHN	20 A	7 A
FAN F-13	1-#12, 1-#12, 1-#12	Cu THHN	20 A	7 A
FAN F-14	1-#12, 1-#12, 1-#12	Cu THHN	20 A	7 A
FAN F-15	1-#12, 1-#12, 1-#12	Cu THHN	20 A	7 A
FAN F-16	1-#12, 1-#12, 1-#12	Cu THHN	20 A	7 A
FAN F-17	1-#12, 1-#12, 1-#12	Cu THHN	20 A	7 A
FAN F-18	1-#12, 1-#12, 1-#12	Cu THHN	20 A	7 A

Electrical Device Schedule

Description	Manufacturer	Model	Count
			10
20 A Tamper-proof Duplex receptacle	Cooper	TR5362W	2
20 A Wall Switch	Cooper	CSB320	5
20A Duplex Receptacle	Cooper	TR5362W	271
20A GFCI Protected Receptacle	Hubbell	GFR8300H	32
Automatic Door Operating Switch	Refer to Specifications		3
Automatic Door Operator	Refer to Specifications		2
EWC GFCI Protected Receptacle	Hubbell	GFR8300H	2
Fire Alarm Control Panel	Refer to Specifications		1
Flush Floor Receptacle with data outlet	Hubbell	S1PFB-S1SP-S1TFCxx	1
Organ Junction Box	Refer to Specifications		2
Projection Screen	Refer to Specifications		1
Range Receptacle	Specification	Per equipment's manufacturer	2
Scoreboard Junction Box	Refer to Specifications		2
Switched Duplex Receptacle	Cooper	TR5362W	2
Thermal trip switch in NEMA 4 enclosure	Square-D	FG6P	28
Thermostat	Refer to Specifications		1

Lighting Device Schedule

Description	Manufacturer	Model	Count
			7
15 A Pilot Switch	Cooper	294	1
20 A Single Pole Dimmer Switch	Refer to Specifications		9
20 A Single Pole Light Switch	Refer to Specifications		14
Dual technology ceiling mounted occupancy sensor with override switch	Wattstopper or Leviton equivalent	DT-355	52
Dual technology wall mounted occupancy sensor	Wattstopper or Leviton equivalent	DW-100	61
Momentary Light Switch	Refer to Specifications		23

Electric Heater Circuiting Schedule

Load Name	Voltage	Wire Size	Wire Type	Breaker Rating	Apparent Load
EH-1	208 V	1-#12, 1-#12, 1-#12	Cu THHN	20 A	3000 VA
EH-2	208 V	1-#12, 1-#12, 1-#12	Cu THHN	20 A	3000 VA
EH-3	208 V	1-#12, 1-#12, 1-#12	Cu THHN	20 A	3000 VA
EH-4	208 V	1-#12, 1-#12, 1-#12	Cu THHN	20 A	3000 VA
EH-5	208 V	1-#12, 1-#12, 1-#12	Cu THHN	20 A	3000 VA
EH-6	208 V	1-#12, 1-#12, 1-#12	Cu THHN	20 A	3000 VA
EH-7	208 V	1-#12, 1-#12, 1-#12	Cu THHN	20 A	3000 VA
EH-8	208 V	1-#12, 1-#12, 1-#12	Cu THHN	20 A	3000 VA
EH-9	208 V	1-#12, 1-#12, 1-#12	Cu THHN	20 A	3000 VA

Electrical Symbols Legend

NOTE: ALL SYMBOLS MAY NOT BE USED

S	Wall Switch
S3	Three-Way Wall Switch
S4	Four-Way Wall Switch
SDT	Digital Time Switch
SF	Motor Fan Switch
SM	Momentary Switch
SP	Pilot Switch
D	Dimmer Switch
	Duplex 20 A Receptacle
	Switched Duplex Receptacle
EWC GFCI	Electric Water Cooler GFCI Protected Receptacle
	Flush Floor Fire Poke Through With Data Outlet
GFCI	Duplex 20 A GFCI Protected Receptacle
R	Range Receptacle
T	Duplex 20 A Tamper Proof Receptacle
WP GFCI	Duplex 20 A Weather Proof Receptacle. Provide a GFCI outlet and while in-use cover.
	Special Purpose Outlet. Provide per equipment manufacturer requirements.
	4" x 4" x 2-1/8" deep flush j-box with single gang mudring, 3/4" conduit to service entrance.
J	4" x 4" x 2-1/8" deep flush j-box with mudring to match application
M	Dual Technology Wall Mounted Occupancy Sensor
MDT	Dual Technology Ceiling Mounted Occupancy Sensor With Override Switch
	Electric Motor
EF 1	Mechanical Equipment Symbol
	Disconnect Switch
	Panelboard
	Branch Circuit Concealed in Ceiling, Wall or Floor
A-1	Circuit Homerun to Panel
?	Reference Note Callout
P	Photocell
	Fixture With Emergency Battery Pack
F2	Fixture Type

Lighting Fixture Symbols

	F1
	F2
	F3
	F4
	F5
	F6
	F7
	F8
	F10
	F11
	F12
	F13
	F14
	F15
	F16
	F17
	F18
	F19
	F20
	F21
	F22
	F23
	F24

bhd ARCHITECTS
www.bhdarchitects.com
Phone 801.571.0010
Fax 801.571.0303
Toll Free 888.571.0010
65 East Wadsworth Park Drive
Suite 205 Draper, Utah 84020

LICENSED PROFESSIONAL ENGINEER
No. 5148728
DAVID G. HINCKLEY
8-19-24
STATE OF UTAH

SPECTRUM ENGINEERS
324 S. State St., Suite 400
Salt Lake City, UT 84111
800-678-7077
801-328-5151
fax: 801-328-5155
www.spectrum-engineers.com

THE CHURCH OF JESUS CHRIST OF LATTER-DAY SAINTS

Orem YSA 3rd 10 Ward Building
Orem UT YSA 3rd Stake

Approx. 1700 West 575 South
Vineyard, Utah 84059

Date: 19 Aug 2024
BHD #: 2344
County Parcel: 39:228:0001
Plan Series: 2024 10 Ward SC
Owner #: 590-189-a

Drawing Issue and Revision Schedule

#	Date	Description
1	19 Aug 2024	Bid Documents

Schedules & Symbols

E601

Autodesk Docs://240504 - Orem YSA 3rd 10 Ward Stake Center/240504-Elec Central.rvt
8/19/2024 9:03:09 PM

BRANCH PANEL LC1

Location:
Supply From: PANEL M
Mounting: Surface
Enclosure: Type 3R

Volts: 120/208 Wye
Phases: 3
Wires: 4

A.I.C. Rating: 22000
Mains Type: MLO
Mains Rating: 100 A
MCB Rating: 100 A

CKT	Circuit Description	Trip	Poles	A		B		C		Poles	Trip	Circuit Description	CKT
LC1-1	CONDENSING UNIT	35 A	2	1822 VA	1822 VA					2	35 A	CONDENSING UNIT	LC1-2
LC1-3	CU-10					1822 VA	1822 VA					CU-7	LC1-4
LC1-5	CONDENSING UNIT	35 A	2					1822 VA	180 VA	1	20 A	RCPT EXTERIOR	LC1-6
LC1-7	CU-9			1822 VA	--					1	--	Space	LC1-8
LC1-9	CONDENSING UNIT	35 A	2			1822 VA	0 VA			2	50 A	Spare	LC1-10
LC1-11	CU-8							1822 VA	0 VA				LC1-12
			Total Load:	5466 VA		5466 VA		3824 VA					
			Tot. Amps:	48 A		48 A		32 A					

Legend:

Load Classification	Connected Load	Demand Factor	Est. Demand	Panel Totals	
HVAC	14577 VA	100.00%	14577 VA		
Receptacle	180 VA	80.00%	144 VA	**Total Conn. Load:**	14757 VA
				Total Est. Demand:	14721 VA
				Total Conn.:	41 A
				Total Est. Demand:	41 A

Notes:
1. ALL LOAD CENTERS SHALL HAVE SPACES AS SHOWN TO ALLOW FOR FUTURE ADDITION OF CONDENSING UNIT ANTI-THEFT SYSTEM (WHEN THIS SYSTEM IS ADDED THE LOAD CENTER WILL FEED A LOW-VOLTAGE TRANSFORMER FOR THE ANTI-THEFT SYSTEM). 2. PROVIDE ARC-FLASH HAZARD LABELS PER SPECIFICATION.

BRANCH PANEL LC2

Location:
Supply From: PANEL M
Mounting: Surface
Enclosure: Type 3R

Volts: 120/208 Wye
Phases: 3
Wires: 4

A.I.C. Rating: 22000
Mains Type: MLO
Mains Rating: 100 A
MCB Rating: 100 A

CKT	Circuit Description	Trip	Poles	A		B		C		Poles	Trip	Circuit Description	CKT
LC2-1	CONDENSING UNIT	35 A	2	1822 VA	2321 VA					2	50 A	CONDENSING UNIT	LC2-2
LC2-3	CU-6					1822 VA	2321 VA					CU-3b	LC2-4
LC2-5	CONDENSING UNIT	50 A	2					2321 VA	1822 VA	2	50 A	CONDENSING UNIT	LC2-6
LC2-7	CU-3a			2321 VA	1822 VA							CU-5	LC2-8
LC2-9	RCPT EXTERIOR	20 A	1			180 VA	0 VA			2	40 A	Spare	LC2-10
LC2-11	Spare	20 A	1					0 VA	0 VA				LC2-12
LC2-13	Spare	35 A	2	0 VA	0 VA					2	50 A	Spare	LC2-14
LC2-15						0 VA	0 VA						LC2-16
			Total Load:	8287 VA		4323 VA		4143 VA					
			Tot. Amps:	69 A		36 A		35 A					

Legend:

Load Classification	Connected Load	Demand Factor	Est. Demand	Panel Totals	
HVAC	16573 VA	100.00%	16573 VA		
Receptacle	180 VA	80.00%	144 VA	**Total Conn. Load:**	16753 VA
				Total Est. Demand:	16717 VA
				Total Conn.:	47 A
				Total Est. Demand:	46 A

Notes:
1. ALL LOAD CENTERS SHALL HAVE SPACES AS SHOWN TO ALLOW FOR FUTURE ADDITION OF CONDENSING UNIT ANTI-THEFT SYSTEM (WHEN THIS SYSTEM IS ADDED THE LOAD CENTER WILL FEED A LOW-VOLTAGE TRANSFORMER FOR THE ANTI-THEFT SYSTEM). 2. PROVIDE ARC-FLASH HAZARD LABELS PER SPECIFICATION.

BRANCH PANEL LC3

Location:
Supply From: PANEL M
Mounting: Surface
Enclosure: Type 3R

Volts: 120/208 Wye
Phases: 3
Wires: 4

A.I.C. Rating: 22000
Mains Type: MLO
Mains Rating: 100 A
MCB Rating: 100 A

CKT	Circuit Description	Trip	Poles	A		B		C		Poles	Trip	Circuit Description	CKT
LC3-1	CONDENSING UNIT	50 A	2	2321 VA	2321 VA					2	50 A	CONDENSING UNIT	LC3-2
LC3-3	CU-4					2321 VA	2321 VA					CU-2b	LC3-4
LC3-5	CONDENSING UNIT	50 A	2					2321 VA	2321 VA	2	50 A	CONDENSING UNIT	LC3-6
LC3-7	CU-2a			2321 VA	2321 VA							CU-1b	LC3-8
LC3-9	CONDENSING UNIT	50 A	2			2321 VA	0 VA			1	20 A	Spare	LC3-10
LC3-11	CU-1a							2321 VA	180 VA	1	20 A	RCPT EXTERIOR	LC3-12
LC3-13	Spare	40 A	2	0 VA	0 VA					2	50 A	Spare	LC3-14
LC3-15						0 VA	0 VA						LC3-16
			Total Load:	9285 VA		6964 VA		7144 VA					
			Tot. Amps:	78 A		58 A		60 A					

Legend:

Load Classification	Connected Load	Demand Factor	Est. Demand	Panel Totals	
HVAC	23213 VA	100.00%	23213 VA		
Receptacle	180 VA	80.00%	144 VA	**Total Conn. Load:**	23393 VA
				Total Est. Demand:	23357 VA
				Total Conn.:	65 A
				Total Est. Demand:	65 A

Notes:
1. ALL LOAD CENTERS SHALL HAVE SPACES AS SHOWN TO ALLOW FOR FUTURE ADDITION OF CONDENSING UNIT ANTI-THEFT SYSTEM (WHEN THIS SYSTEM IS ADDED THE LOAD CENTER WILL FEED A LOW-VOLTAGE TRANSFORMER FOR THE ANTI-THEFT SYSTEM). 2. PROVIDE ARC-FLASH HAZARD LABELS PER SPECIFICATION.

BRANCH PANEL LC4

Location:
Supply From: PANEL M
Mounting: Surface
Enclosure: Type 3R

Volts: 120/208 Wye
Phases: 3
Wires: 4

A.I.C. Rating: 22000
Mains Type: MLO
Mains Rating: 100 A
MCB Rating: 100 A

CKT	Circuit Description	Trip	Poles	A		B		C		Poles	Trip	Circuit Description	CKT
LC4-1	CONDENSING UNIT	50 A	2	2321 VA	2321 VA					2	50 A	CONDENSING UNIT	LC4-2
LC4-3	CU-2c					2321 VA	2321 VA					CU-2d	LC4-4
LC4-5	CONDENSING UNIT	35 A	2					1822 VA	2321 VA	2	50 A	CONDENSING UNIT	LC4-6
LC4-7	CU-18			1822 VA	2321 VA							CU-1c	LC4-8
LC4-9	CONDENSING UNIT	50 A	2			2321 VA	180 VA			1	20 A	RCPT EXTERIOR	LC4-10
LC4-11	CU-1d							2321 VA	0 VA	2	35 A	Spare	LC4-12
LC4-13	Spare	20 A	1	0 VA	0 VA								LC4-14
LC4-15	Spare	40 A	2			0 VA	0 VA			2	50 A	Spare	LC4-16
LC4-17								0 VA	0 VA				LC4-18
			Total Load:	8786 VA		7144 VA		6465 VA					
			Tot. Amps:	74 A		60 A		54 A					

Legend:

Load Classification	Connected Load	Demand Factor	Est. Demand	Panel Totals	
HVAC	22214 VA	100.00%	22214 VA		
Receptacle	180 VA	80.00%	144 VA	**Total Conn. Load:**	22394 VA
				Total Est. Demand:	22358 VA
				Total Conn.:	62 A
				Total Est. Demand:	62 A

Notes:
1. ALL LOAD CENTERS SHALL HAVE SPACES AS SHOWN TO ALLOW FOR FUTURE ADDITION OF CONDENSING UNIT ANTI-THEFT SYSTEM (WHEN THIS SYSTEM IS ADDED THE LOAD CENTER WILL FEED A LOW-VOLTAGE TRANSFORMER FOR THE ANTI-THEFT SYSTEM). 2. PROVIDE ARC-FLASH HAZARD LABELS PER SPECIFICATION.

BRANCH PANEL LC5

Location:
Supply From: PANEL M
Mounting: Surface
Enclosure: Type 3R

Volts: 120/208 Wye
Phases: 3
Wires: 4

A.I.C. Rating: 22000
Mains Type: MLO
Mains Rating: 100 A
MCB Rating: 100 A

CKT	Circuit Description	Trip	Poles	A		B		C		Poles	Trip	Circuit Description	CKT
LC5-1	CONDENSING UNIT	35 A	2	1822 VA	2321 VA					2	50 A	CONDENSING UNIT	LC5-2
LC5-3	CU-15					1822 VA	2321 VA					CU-3d	LC5-4
LC5-5	CONDENSING UNIT	50 A	2					2321 VA	1822 VA	2	35 A	CONDENSING UNIT	LC5-6
LC5-7	CU-3c			2321 VA	1822 VA							CU-16	LC5-8
LC5-9	CONDENSING UNIT	35 A	2			1822 VA	180 VA			1	20 A	RCPT EXTERIOR	LC5-10
LC5-11	CU-17							1822 VA	--	1	--	Space	LC5-12
			Total Load:	8287 VA		6145 VA		5965 VA					
			Tot. Amps:	69 A		51 A		50 A					

Legend:

Load Classification	Connected Load	Demand Factor	Est. Demand	Panel Totals	
HVAC	20218 VA	100.00%	20218 VA		
Receptacle	180 VA	80.00%	144 VA	**Total Conn. Load:**	20398 VA
				Total Est. Demand:	20362 VA
				Total Conn.:	57 A
				Total Est. Demand:	57 A

Notes:
1. ALL LOAD CENTERS SHALL HAVE SPACES AS SHOWN TO ALLOW FOR FUTURE ADDITION OF CONDENSING UNIT ANTI-THEFT SYSTEM (WHEN THIS SYSTEM IS ADDED THE LOAD CENTER WILL FEED A LOW-VOLTAGE TRANSFORMER FOR THE ANTI-THEFT SYSTEM). 2. PROVIDE ARC-FLASH HAZARD LABELS PER SPECIFICATION.

BRANCH PANEL LC6

Location:
Supply From: PANEL M
Mounting: Surface
Enclosure: Type 3R

Volts: 120/208 Wye
Phases: 3
Wires: 4

A.I.C. Rating: 22000
Mains Type: MLO
Mains Rating: 100 A
MCB Rating: 100 A

CKT	Circuit Description	Trip	Poles	A		B		C		Poles	Trip	Circuit Description	CKT
LC6-1	CONDENSING UNIT	60 A	2	2879 VA	1822 VA					2	35 A	CONDENSING UNIT	LC6-2
LC6-3	CU-11					2879 VA	1822 VA					CU-14	LC6-4
LC6-5	CONDENSING UNIT	35 A	2					1822 VA	180 VA	1	20 A	RCPT EXTERIOR	LC6-6
LC6-7	CU-12			1822 VA	--					1	--	Space	LC6-8
LC6-9	CONDENSING UNIT	35 A	2			1822 VA	0 VA			2	50 A	Spare	LC6-10
LC6-11	CU-13							1822 VA	0 VA				LC6-12
			Total Load:	6523 VA		6523 VA		3824 VA					
			Tot. Amps:	58 A		58 A		32 A					

Legend:

Load Classification	Connected Load	Demand Factor	Est. Demand	Panel Totals	
HVAC	16690 VA	100.00%	16690 VA		
Receptacle	180 VA	80.00%	144 VA	**Total Conn. Load:**	16870 VA
				Total Est. Demand:	16834 VA
				Total Conn.:	47 A
				Total Est. Demand:	47 A

Notes:
1. ALL LOAD CENTERS SHALL HAVE SPACES AS SHOWN TO ALLOW FOR FUTURE ADDITION OF CONDENSING UNIT ANTI-THEFT SYSTEM (WHEN THIS SYSTEM IS ADDED THE LOAD CENTER WILL FEED A LOW-VOLTAGE TRANSFORMER FOR THE ANTI-THEFT SYSTEM). 2. PROVIDE ARC-FLASH HAZARD LABELS PER SPECIFICATION.

bhd ARCHITECTS
www.bhdarchitects.com
Phone 801.571.0010
Fax 801.571.0303
Toll Free 888.571.0010
45 East Wadsworth Park Drive
Suite 205 Draper, Utah 84020

LICENSED PROFESSIONAL ENGINEER
No. 5148728
DAVID G. HINCKLEY
8-19-24
STATE OF UTAH

SPECTRUM ENGINEERS
324 S. State St., Suite 400
Salt Lake City, UT 84111
800-678-7077
801-328-5151
fax: 801-328-5155
www.spectrum-engineers.com

THE CHURCH OF JESUS CHRIST OF LATTER-DAY SAINTS

Orem YSA 3rd 10 Ward Building
Orem UT YSA 3rd Stake

Approx. 1700 West 575 South
Vineyard, Utah 84059

Date: 15 Aug 2024
BHD #: 2344
County Parcel: 37:228:0001
Plan Series: 2024 10 Ward SC
Owner #: 376-1876

Drawing Issue and Revision Schedule

#	Date	Description
1	15 Aug 2024	Bid Documents

Panel Schedules

E602

Autodesk Docs://240504 - Orem YSA 3rd 10 Ward Stake Center/240504-Elec Central.rvt
8/19/2024 9:03:12 PM

BRANCH PANEL LN

Location: | **Supply From:** PANEL M | **Mounting:** SURFACE | **Enclosure:** Type 1
Volts: 120/208 Wye | **Phases:** 3 | **Wires:** 4
A.I.C. Rating: 22000 | **Mains Type:** MLO | **Mains Rating:** 100 A | **MCB Rating:** 100 A

CKT	Circuit Description	Trip	Poles	A		B		C		Poles	Trip	Circuit Description	CKT
LN-1	LTS-BHP,CLK,RMS	20 A	1	1818 VA	1008 VA					1	20 A	LTS-VST,FYR,HALL	LN-2
LN-3	LTS-RMS,SERV,EF	20 A	1			1175 VA	840 VA			1	20 A	LTS-HALL,WAIT	LN-4
LN-5	LTS-SK,RR,RM,STR	20 A	1					1410 VA	0 VA	1	20 A	Spare	LN-6
LN-7	LTS-ATTIC	20 A	1	420 VA	500 VA					1	20 A	Ltg Exterior	LN-8
LN-9	LTS-EQ PLAT	20 A	1			728 VA	0 VA			1	20 A	Spare	LN-10
LN-11	Spare	20 A	1					0 VA	--	1	--	Space	LN-12
LN-13	Spare	20 A	1	0 VA	--					1	--	Space	LN-14
LN-15	Spare	20 A	1			0 VA	--			1	--	Space	LN-16
				Total Load:	3704 VA	2721 VA		1410 VA					
				Tot. Amps:	33 A	24 A		12 A					

Legend:

Load Classification	Connected Load	Demand Factor	Est. Demand	Panel Totals	
Cooling	100 VA	100.00%	100 VA		
Lighting	4309 VA	100.00%	4309 VA	**Total Conn. Load:**	7823 VA
Other	3513 VA	100.00%	3513 VA	**Total Est. Demand:**	7823 VA
				Total Conn.:	22 A
				Total Est. Demand:	22 A

Notes:
1. PROVIDE ARC-FLASH HAZARD LABELS PER SPECIFICATION.

BRANCH PANEL LS

Location: | **Supply From:** PANEL M | **Mounting:** SURFACE | **Enclosure:** Type 1
Volts: 120/208 Wye | **Phases:** 3 | **Wires:** 4
A.I.C. Rating: 22000 | **Mains Type:** MLO | **Mains Rating:** 100 A | **MCB Rating:** 100 A

CKT	Circuit Description	Trip	Poles	A		B		C		Poles	Trip	Circuit Description	CKT
LS-1	LTS-MN,WN,EF	20 A	1	1022 VA	1072 VA					1	20 A	LTS-RMS,CUST,EF	LS-2
LS-3	LTS-CHAPEL	20 A	1			2109 VA	1502 VA			1	20 A	LTS-BHP,CLK,RMS	LS-4
LS-5	LTS-CHAPEL PEND	20 A	1					2724 VA	1311 VA	1	20 A	LTS-RMS,SERV,EF	LS-6
LS-7	LTS-CULT CENT	20 A	1	968 VA	1241 VA					1	20 A	LTS-HALL,WAIT,VST	LS-8
LS-9	LTS-CHAPEL	20 A	1			1080 VA	1113 VA			1	20 A	LTS-VST,FYR,HALL	LS-10
LS-11	LTS-CHAPEL PEND	20 A	1					2724 VA	1966 VA	1	20 A	LTS-BP,CK,TCH,EF	LS-12
LS-13	Spare	20 A	1	0 VA	770 VA					1	20 A	LTS - SITE	LS-14
LS-15	Spare	20 A	1			0 VA	280 VA			1	20 A	LTS - SITE	LS-16
				Total Load:	5054 VA	6027 VA		7957 VA					
				Tot. Amps:	42 A	51 A		68 A					

Legend:

Load Classification	Connected Load	Demand Factor	Est. Demand	Panel Totals	
Cooling	600 VA	100.00%	600 VA		
Lighting	4830 VA	100.00%	4830 VA	**Total Conn. Load:**	17783 VA
Other	12408 VA	100.00%	12408 VA	**Total Est. Demand:**	17783 VA
				Total Conn.:	49 A
				Total Est. Demand:	49 A

Notes:
1. PROVIDE ARC-FLASH HAZARD LABELS PER SPECIFICATION.

Switchboard: PANEL M

Location: Custodial 144 | **Supply From:** | **Mounting:** Surface | **Enclosure:** Type 3R
Volts: 120/208 Wye | **Phases:** 3 | **Wires:** 4
A.I.C. Rating: 22000 | **Mains Type:** MCB | **Mains Rating:** 1000 A | **MCB Rating:** 1000 A

Notes:
1. PROVIDE METER SOCKET AND CT CABINET PER LOCAL UTILITY REQUIREMENTS.
2. PROVIDE UNDERGROUND PARALLEL SERVICE TO THE SWITCHBOARD.
3. PROVIDE ALUMINUM BUSES
4. PANEL TO BE SERIES RATED.
5. ALL BREAKERS TO BE CAPABLE OF BEING LOCKED IN THE OFF POSITION.
6. PROVIDE A POWER QUALITY METER, CT'S AND PT'S MEASURING THE PANEL'S SERVICE ENTRANCE CONDUCTORS. TIE THE POWER QUALITY METER TO THE BUILDING MANAGEMENT SYSTEM.
7. PROVIDE REAL TIME ENERGY METERING ON EVERY BRANCH CIRCUIT IN THIS PANEL. TIE THE METERS TO THE BUILDING MANAGEMENT SYSTEM.

CKT	Circuit Description	# of Poles	Frame Size	Trip Rating	Load	Remarks
M-1	SPD	3	100 A	30 A	0 VA	
M-2	PANEL LS	3	400 A	100 A	17783 VA	
M-3	PANEL LN	3	400 A	125 A	7823 VA	
M-4	PANEL LC3	3	400 A	125 A	23393 VA	
M-5	PANEL LC1	3	400 A	125 A	14757 VA	
M-6	PANEL RN	3	400 A	125 A	22860 VA	
M-7	PANEL LC4	3	400 A	125 A	22394 VA	
M-8	PANEL LC6	3	400 A	125 A	16870 VA	
M-9	PANEL MN	3	400 A	225 A	57948 VA	
M-10	PANEL MS	3	400 A	250 A	56238 VA	
M-11	PANEL RS	3	400 A	150 A	28260 VA	
M-12	Space	1	--	--	--	
				Total Conn. Load:	304262 VA	
				Total Amps:	845 A	

Legend:

Load Classification	Connected Load	Demand Factor	Est. Demand	Panel Totals	
HVAC	113485 VA	100.00%	113485 VA		
Lighting	9259 VA	100.00%	9259 VA	**Total Conn. Load:**	304262 VA
Other	42655 VA	100.00%	42655 VA	**Total Est. Demand:**	251447 VA
Power	61608 VA	100.00%	61608 VA	**Total Conn. Current:**	845 A
				Total Est. Dem. Curr.:	698 A

Notes:
1. PROVIDE ARC-FLASH HAZARD LABELS PER SPECIFICATION.

BRANCH PANEL MN

Location: | **Supply From:** PANEL M | **Mounting:** SURFACE | **Enclosure:** Type 1
Volts: 120/208 Wye | **Phases:** 3 | **Wires:** 4
A.I.C. Rating: 22000 | **Mains Type:** MLO | **Mains Rating:** 225 A | **MCB Rating:** 225 A

CKT	Circuit Description	Trip	Poles	A		B		C		Poles	Trip	Circuit Description	CKT
MN-1	MOTOR SCREEN	20 A	1	600 VA									MN-2
MN-3	FRIDGE	20 A	1			180 VA	180 VA			1	20 A	RCPT-ROST 155	MN-4
MN-5	RCPT-CLERK 122	20 A	1					180 VA	5000 VA	2	50 A	RANGE (NOTE 2)	MN-6
MN-7	MOTOR BBALL	20 A	1	1150 VA	5000 VA								MN-8
MN-9	MOTOR BBALL	20 A	1			1150 VA	180 VA			1	20 A	RCPT-ROST 145	MN-10
MN-11	ORGAN	20 A	1					180 VA	180 VA	1	20 A	DR FNTN (NOTE 2)	MN-12
MN-13	ORGAN	20 A	1	180 VA	180 VA					1	20 A	COPIER	MN-14
MN-15	FAN F-1a	20 A	1			1176 VA	2064 VA			1	25 A	ERV-1a	MN-16
MN-17	EH-1	20 A	2					1500 VA	1500 VA	2	20 A	EH-5	MN-18
MN-19				1500 VA	1500 VA								MN-20
MN-21	EH-4	20 A	2			1500 VA	1500 VA			2	20 A	EH-3	MN-22
MN-23								1500 VA	1500 VA				MN-24
MN-25	EH-2	20 A	2	1500 VA	1176 VA					1	20 A	FAN F-1b	MN-26
MN-27						1500 VA	1176 VA			1	20 A	FAN F-2a	MN-28
MN-29	FAN F-4	20 A	1					1176 VA	864 VA	1	20 A	FAN F-9	MN-30
MN-31	ERV-2a	25 A	1	2064 VA	1176 VA					1	20 A	FAN F-2b	MN-32
MN-33	FAN F-5	20 A	1			864 VA	1176 VA			1	20 A	FAN F-3a	MN-34
MN-35	FAN F-10	20 A	1					864 VA	2064 VA	1	25 A	ERV-3a	MN-36
MN-37	FAN F-6	20 A	1	864 VA	1176 VA					1	20 A	FAN F-3b	MN-38
MN-39	FAN F-7	20 A	1			864 VA	864 VA			1	20 A	FAN F-8	MN-40
MN-41	WATER HEATER	30 A	2					4500 VA	0 VA	1	20 A	Spare	MN-42
MN-43				0 VA	0 VA					1	20 A	Spare	MN-44
MN-45	WATER HEATER	30 A	2			4500 VA	0 VA			1	20 A	Spare	MN-46
MN-47								0 VA	0 VA	1	20 A	Spare	MN-48
				Total Load:	18066 VA	18874 VA		21008 VA					
				Tot. Amps:	151 A	158 A		176 A					

Legend:

Load Classification	Connected Load	Demand Factor	Est. Demand	Panel Totals	
Appliance	10180 VA	100.00%	10180 VA		
Other	13416 VA	100.00%	13416 VA	**Total Conn. Load:**	57948 VA
Power	31152 VA	100.00%	31152 VA	**Total Est. Demand:**	56028 VA
Receptacle	3200 VA	40.00%	1280 VA	**Total Conn.:**	161 A
				Total Est. Demand:	156 A

Notes:
1. PROVIDE ARC-FLASH HAZARD LABELS PER SPECIFICATION. 2. PROVIDE GFCI CIRCUIT BREAKER

BRANCH PANEL MS

Location: | **Supply From:** PANEL M | **Mounting:** SURFACE | **Enclosure:** Type 1
Volts: 120/208 Wye | **Phases:** 3 | **Wires:** 4
A.I.C. Rating: 22000 | **Mains Type:** MLO | **Mains Rating:** 225 A | **MCB Rating:** 225 A

CKT	Circuit Description	Trip	Poles	A		B		C		Poles	Trip	Circuit Description	CKT
MS-1													MS-2
MS-3													MS-4
MS-5													MS-6
MS-7	RCPT-TECH	20 A	1	180 VA	180 VA					1	20 A	RCPT-TECH	MS-8
MS-9	RCPT-TECH	20 A	1			180 VA	180 VA			1	20 A	RCPT-TECH	MS-10
MS-11	RCPT-TECH	20 A	1					180 VA	180 VA	1	20 A	DR FNTN (NOTE 2)	MS-12
MS-13	ADA OPENERS	20 A	1	600 VA	864 VA					1	20 A	FAN F-13	MS-14
MS-15	FRIDGE	20 A	1			180 VA	5000 VA			2	50 A	RANGE (NOTE 2)	MS-16
MS-17	FAN F-12	20 A	1					864 VA	5000 VA				MS-18
MS-19	FAN F-14	20 A	1	864 VA	2064 VA					1	25 A	ERV-11	MS-20
MS-21	FAN F-15	20 A	1			864 VA	1176 VA			1	20 A	FAN F-3c	MS-22
MS-23	FAN F-16	20 A	1					864 VA	2064 VA	1	25 A	ERV-3b	MS-24
MS-25	FAN F-2d	20 A	1	1176 VA	1176 VA					1	20 A	FAN F-3d	MS-26
MS-27	ERV-2b	25 A	1			2064 VA	1176 VA			1	20 A	FAN F-2c	MS-28
MS-29	FAN F-1c	20 A	1					1176 VA	864 VA	1	20 A	FAN F-17	MS-30
MS-31	FAN F-1d	20 A	1	1176 VA	864 VA					1	20 A	FAN F-18	MS-32
MS-33	EH-9	20 A	2			1500 VA	2064 VA			1	25 A	ERV-1b	MS-34
MS-35								1500 VA	1500 VA	2	20 A	EH-8	MS-36
MS-37	EH-6	20 A	2	1500 VA	1500 VA								MS-38
MS-39						1500 VA	1500 VA			2	20 A	EH-7	MS-40
MS-41	FAN F-11	20 A	1					864 VA	1500 VA				MS-42
MS-43	WATER HEATER	30 A	2	4500 VA	555 VA					1	20 A	RCPT/LTS-STOR	MS-44
MS-45						0 VA	600 VA			1	20 A	FACP	MS-46
MS-47	Spare	20 A	1					0 VA	4500 VA	2	30 A	WATER HEATER	MS-48
MS-49	Spare	20 A	1	0 VA	0 VA								MS-50
				Total Load:	17198 VA	17984 VA		21056 VA					
				Tot. Amps:	143 A	151 A		176 A					

Legend:

Load Classification	Connected Load	Demand Factor	Est. Demand	Panel Totals	
Appliance	10180 VA	100.00%	10180 VA		
Lighting	120 VA	100.00%	120 VA	**Total Conn. Load:**	56238 VA
Other	14048 VA	100.00%	14048 VA	**Total Est. Demand:**	55316 VA
Power	30456 VA	100.00%	30456 VA	**Total Conn.:**	156 A
Receptacle	1440 VA	36.00%	518 VA	**Total Est. Demand:**	154 A

Notes:
1. PROVIDE ARC-FLASH HAZARD LABELS PER SPECIFICATION. PROVIDE GFCI CIRCUIT BREAKER

BRANCH PANEL RN

Location: | **Supply From:** PANEL M | **Mounting:** SURFACE | **Enclosure:** Type 1
Volts: 120/208 Wye | **Phases:** 3 | **Wires:** 4
A.I.C. Rating: 22000 | **Mains Type:** MLO | **Mains Rating:** 100 A | **MCB Rating:** 100 A

CKT	Circuit Description	Trip	Poles	A		B		C		Poles	Trip	Circuit Description	CKT
RN-1	RCPT-INT 101, 102	20 A	1	720 VA	1080 VA					1	20 A	RCPT-VST,FYR,HLL	RN-2
RN-3	RCPT-BSHP 103	20 A	1			900 VA	900 VA			1	20 A	RCPT-WAIT, RR	RN-4
RN-5	RCPT-BSHP 104	20 A	1					900 VA	720 VA	1	20 A	RCPT-INT 123, 124	RN-6
RN-7	RCPT-WAIT,HALL	20 A	1	720 VA	720 VA					1	20 A	RCPT-CLERK 122	RN-8
RN-9	RCPT-CLERK 106	20 A	1			720 VA	900 VA			1	20 A	RCPT-STK PRES	RN-10
RN-11	RCPT-RM 107	20 A	1					900 VA	1260 VA	1	20 A	RCPT-H COUNCIL	RN-12
RN-13	RCPT-RM 108, 109	20 A	1	1260 VA	360 VA					1	20 A	RCPT-CHPL PULPIT	RN-14
RN-15	RCPT-RM 110	20 A	1			720 VA	900 VA			1	20 A	RCPT-CHPL,S PREP	RN-16
RN-17	RCPT-RM 112	20 A	1					900 VA	900 VA	1	20 A	RCPT-CULT CENT	RN-18
RN-19	RCPT-RM 113	20 A	1	540 VA	720 VA					1	20 A	RCPT-CHPL,ROST	RN-20
RN-21	RCPT-HALL,RR,STR	20 A	1			900 VA	540 VA			1	20 A	RCPT-MN,WN,CUST	RN-22
RN-23	RCPT-RM 117	20 A	1					540 VA	720 VA	1	20 A	RCPT-HALL	RN-24
RN-25	RCPT-SERVING 114	20 A	1	360 VA	720 VA					1	20 A	RCPT-RM 139	RN-26
RN-27	RCPT-SERVING 114	20 A	1			360 VA	540 VA			1	20 A	RCPT-MAT CENT	RN-28
RN-29	RCPT-SERVING 114	20 A	1					360 VA	1080 VA	1	20 A	RCPT-EQ PLAT	RN-30
RN-31	Spare	20 A	1	0 VA	0 VA					1	20 A	Spare	RN-32
RN-33	Spare	20 A	1			0 VA	0 VA			1	20 A	Spare	RN-34
RN-35	Spare	20 A	1					0 VA	0 VA	1	20 A	Spare	RN-36
RN-37	Spare	20 A	1	0 VA	--					1	--	Space	RN-38
RN-39	Spare	20 A	1			0 VA	--			1	--	Space	RN-40
RN-41	Spare	20 A	1					0 VA	--	1	--	Space	RN-42
				Total Load:	7200 VA	7380 VA		8280 VA					
				Tot. Amps:	60 A	62 A		69 A					

Legend:

Load Classification	Connected Load	Demand Factor	Est. Demand	Panel Totals	
Receptacle	22860 VA	16.00%	3658 VA		
				Total Conn. Load:	22860 VA
				Total Est. Demand:	3658 VA
				Total Conn.:	63 A
				Total Est. Demand:	10 A

Notes:
1. PROVIDE ARC-FLASH HAZARD LABELS PER SPECIFICATION.

BRANCH PANEL RS

Location: | **Supply From:** PANEL M | **Mounting:** SURFACE | **Enclosure:** Type 1
Volts: 120/208 Wye | **Phases:** 3 | **Wires:** 4
A.I.C. Rating: 22000 | **Mains Type:** MLO | **Mains Rating:** 125 A | **MCB Rating:** 125 A

CKT	Circuit Description	Trip	Poles	A		B		C		Poles	Trip	Circuit Description	CKT
RS-1	RCPT-BISHOP 132	20 A	1	900 VA	900 VA					1	20 A	RCPT-BSHP 175	RS-2
RS-3	RCPT-BISHOP 135	20 A	1			900 VA	900 VA			1	20 A	RCPT-BSHP 178	RS-4
RS-5	RCPT-CLERK 137	20 A	1					720 VA	720 VA	1	20 A	RCPT-CLERK 177	RS-6
RS-7	RCPT-INT,WAIT	20 A	1	1080 VA	1080 VA					1	20 A	RCPT-INT,WAIT	RS-8
RS-9	RCPT-VEST,HALL	20 A	1			540 VA	540 VA			1	20 A	RCPT-HALL,RR	RS-10
RS-11	RCPT-INT,WAIT	20 A	1					1080 VA	900 VA	1	20 A	RCPT-FOYER,TECH	RS-12
RS-13	RCPT-BISHOP 160	20 A	1	900 VA	1080 VA					1	20 A	RCPT-RM 183, VST	RS-14
RS-15	RCPT-BISHOP 163	20 A	1			900 VA	1080 VA			1	20 A	RCPT-INT,WAIT	RS-16
RS-17	RCPT-CLERK 162	20 A	1					720 VA	720 VA	1	20 A	RCPT-HALL,RISER	RS-18
RS-19	RCPT-RM 164	20 A	1	900 VA	900 VA					1	20 A	RCPT-BISHOP 186	RS-20
RS-21	RCPT-RM 165	20 A	1			540 VA	900 VA			1	20 A	RCPT-BISHOP 189	RS-22
RS-23	RCPT-RM 166	20 A	1					720 VA	720 VA	1	20 A	RCPT-CLERK 188	RS-24
RS-25	RCPT-RM 167	20 A	1	720 VA	540 VA					1	20 A	RCPT-CHAPEL	RS-26
RS-27	RCPT-RM 168	20 A	1			900 VA	720 VA			1	20 A	RCPT-CULT CENT	RS-28
RS-29	RCPT-RM 169	20 A	1					540 VA	720 VA	1	20 A	RCPT-CHAPEL	RS-30
RS-31	RCPT-SERVING 172	20 A	1	360 VA	360 VA					1	20 A	RCPT-CHPL PULPIT	RS-32
RS-33	RCPT-SERVING 172	20 A	1			360 VA	900 VA			1	20 A	RCPT-MN,WN,CUST	RS-34
RS-35	RCPT-SERVING 172	20 A	1					360 VA	720 VA	1	20 A	RCPT-RM 140	RS-36
RS-37	Spare	20 A	1	0 VA	720 VA					1	20 A	RCPT-EQ PLAT	RS-38
RS-39	Spare	20 A	1			0 VA	0 VA			1	20 A	Spare	RS-40
RS-41	Spare	20 A	1					0 VA	0 VA	1	20 A	Spare	RS-42
RS-43	Spare	20 A	1	0 VA	0 VA					1	20 A	Spare	RS-44
RS-45	Spare	20 A	1			0 VA	--			1	--	Space	RS-46
RS-47	Space	--	1					--	--	1	--	Space	RS-48
RS-49	Space	--	1	--	--					1	--	Space	RS-50
RS-51	Space	--	1			--	--			1	--	Space	RS-52
RS-53	Space	--	1					--	--	1	--	Space	RS-54
				Total Load:	10440 VA	9180 VA		8640 VA					
				Tot. Amps:	88 A	77 A		72 A					

Legend:

Load Classification	Connected Load	Demand Factor	Est. Demand	Panel Totals	
Receptacle	28260 VA	16.00%	4522 VA		
				Total Conn. Load:	28260 VA
				Total Est. Demand:	4522 VA
				Total Conn.:	78 A
				Total Est. Demand:	13 A

Notes:
1. PROVIDE ARC-FLASH HAZARD LABELS PER SPECIFICATION.
2. PROVIDE SHUNT TRIP CIRCUIT BREAKER. SHUNT TRIP SHALL BE CONTROLLED BY FIRE ALARM PANEL.

bhd ARCHITECTS
www.bhdarchitects.com
Phone 801.571.0010
Fax 801.571.0303
Toll Free 888.571.0010
63 East Wadsworth Park Drive
Suite 205 Draper, Utah 84020

LICENSED PROFESSIONAL ENGINEER — No. 5148728 — DAVID G. HINCKLEY — 8-19-24 — STATE OF UTAH

SPECTRUM ENGINEERS
324 S. State St., Suite 400
Salt Lake City, UT 84111
800-678-7077
801-328-5151
fax: 801-328-5155
www.spectrum-engineers.com

THE CHURCH OF JESUS CHRIST OF LATTER-DAY SAINTS

Orem YSA 3rd 10 Ward Building
Orem UT YSA 3rd Stake

Approx. 1700 West 575 South
Vineyard, Utah 84059

Owner #: 376-1816
Plan Series: 2024 10 Ward SC
County Parcel: 37:226:0001
BHD #: 2341
Date: 15 Aug 2024

Drawing Issue and Revision Schedule

#	Date	Description
1	15 Aug 2024	Bid Documents

Panel Schedules

E603

Autodesk Docs://240504 - Orem YSA 3rd 10 Ward Stake Center/240504-Elec Central.rvt
8/19/2024 9:03:15 PM

LIGHTING FIXTURE SCHEDULE

Type Mark	Description	Lamp	Initial Color Temperature	Electrical Data	Manufacturer1	Model1	Manufacturer2	Model2	Manufacturer3	Model3	Manufacturer4	Model4	Manufacturer5	Model5	Manufacturer6	Model6	Manufacturer7	Model7	Manufacturer8	Model8
F1	1'x4' RECESSED MOUNTED FLAT LED PANEL.	40W LED	3500 K	120 V/1-40 VA	DAY-BRITE	1-FXP-38L-835-4-DS-UNV -DIM-FMA14FP	METALUX	14FPX-42-L835-CD-1-DF-14 W-U	HE WILLIAMS	BP-1-4-LS-8-CS-DFK-124 8W	LSI	SFP14-LED-40-UE-DIM-35-642793	EELP	VLFP6-B-14-40L-QT-35/VLFP 6-B-DWK14 FP6-B-SURF	COLUMBIA	CBT14-A-LSCS-EDD/FK14	MERCURY	MP15-1-17-OCT-A-ELBS-UNI-LBF		
F1b	1'x4' RECESSED MOUNTED LOW PROFILE TROFFER 1-10V DIMMING DRIVER, 1% DIMMING (CULTURAL CENTER)	40W LED	3500 K	120 V/1-40 VA	METALUX	14-G-R-FA-LD5-60-A19/ 156-UNV-L835-CD-1-U-DF-14W-U	HE WILLIAMS	50-F-S-1-4-L65-8-35-S-AF19156-DIM-120	COLUMBIA	LJT-14-35-VL-G-FS-A19-ED-U-FK 14										
F1be	1'x4' RECESSED MOUNTED LOW PROFILE TROFFER 1-10V DIMMING DRIVER, 1% DIMMING (CULTURAL CENTER)	40W LED	3500 K	120 V/1-40 VA	METALUX	14-G-R-FA-LD5-60-A19/ 156-UNV-EL10-L835-CD-1-U-DF-14W-U	HE WILLIAMS	50-F-S-1-4-L65-8-35-S-AF19156-EM10W-DIM-120	COLUMBIA	LJT-14-35-VL-G-FS-A19-ED-ELL14-U-FK14										
F1E	1'x4' RECESSED MOUNTED FLAT LED PANEL.	40W LED	3500 K	120 V/1-40 VA	DAY-BRITE	1-FXP-38L-835-4-DS-UNV-EM	METALUX	14FPX-42-L835-CD-1-DF-14-EM	HE WILLIAMS	BP-1-4-LS-8-CS-DFK-124-EM 8W	LSI	SFP14-LED-40-UE-DIM-35-6427-EM	EELP	VLFP6-B-14-40L-QT-35/VLFP	COLUMBIA	CFP14-4035/FK-14-EM	MERCURY	MP15-1-17-OCT-A-ELBS-UNI-LBF		
F2	2'x4' RECESSED FIXTURE FLAT PANEL	40W LED	3500 K	120 V/1-40 VA	ALPHALITE	BFPL-24-L-8-35	METALUX	24FP4735C	HE WILLIAMS	LP-2-4-L50-8-35	LSI	SFP24-LED-50-UE-DIM-35	LITHONIA	CPX 2X4 4000LM 35K M2	COLUMBIA	CBT24-A-LSCS-EDD				
F2b	2X4' RECESSED FIXTURE WITH CENTER ACRYLIC LENS, FLANGE KIT, 90 MIN BATTERY	45W LED	3500 K	120 V/1-65 VA	ALPHALITE	ILT-CB-24L(45S2) /835	METALUX	24CZ2-45-UNV-L835-CD1U	HE WILLIAMS	LT24-L52/835-AF-DIM-UN-FK	LSI	LPASC24-LED-48 LUNV-DIM1-35	LITHONIA	BLC 2X4 5000LM 35K ADSM	COLUMBIA	LCAT24-35MLG-EDU FK24				
F3	2' WALL MOUNTED VANITY FIXTURE WITH ACRYLIC DIFFUSER. MOUNT AT CEILING.	26W LED	3500 K	120 V/1-20 VA	LSI	W442-LED-SS-35 K-UE	METALUX	2BCLED-LD4-16SL-F-UNV-L835-CD1-U	HE WILLIAMS	29-2-L27/835-AF-(L15)-DIM-UNV	LITHONIA	BLWP2 20L ADP GZ10 LP835	COLUMBIA	CWM2-30VWSM-FRFP-EDU	COLUMBIA	CWM2-35VWSM-FRFP-EDU				
F4	4' WALL MOUNTED VANITY FIXTURE WITH ACRYLIC DIFFUSER. MOUNT AT CEILING.	45W LED	3500 K	120 V/1-27 VA	LSI	W444-LED-SS-35 K-UE	METALUX	4BCLED-LD4-24HL-F-UNV-L835-CD1-U	HE WILLIAMS	29-4-L54/835-AF-(L30)-DIM-UNV	LITHONIA	BLWP4 40L ADP GZ10 LP835	COLUMBIA	CWM4-35VWSM-FRFP-ED						
F5	4' LED STRIP LIGHT WITH LENS, SURFACE OR CHAIN SUSPENDED, WITH WIRE GUARD.	50W LED	3500 K	120 V/1-28 VA	DAY-BRITE	FSS430L835-UNV-DIM / FSSWG4	METALUX	4SNLED-LD5-26SL-LW-UN V-L835-CD1-U-WG/SNF-4FT -U	HE WILLIAMS	76-4-L53/835-WG-7614 -DIM-UNV	LSI	AST-4-4L-SA-UNV-835	LITHONIA	CSS L48 ALO3 MVOLT SWW3 80CRI	COLUMBIA	MPS4-30VW-FW-EDU CSHC		LNS-4FT-25-T1-F-G2/WIREGUARD		
F6	COVE (AIMABLE) 2' FIXTURE.	20W LED	3500 K	<varies>	LEDALITE	TC08L83515WN-SN-02-DE	COOPER IO LED	LM-05L-935-120-ID-UNV-S-SM-STD-XX	HE WILLIAMS	CXC-2'00-L4/835-25-D-DIM-UNV			FOCAL POINT	FCOL-HN-500LF-35K-1C-UN V-LD1-CV-2'	LITECONTROL	30-CC-AI-2'-WHS-35K9-I050-D01-UNV				
F7	COVE (AIMABLE) 4' FIXTURE 3000 LM.	20W LED	3500 K	120 V/1-28 VA	LEDALITE	TC08L83510WN-SN-04-DE	COOPER IO LED	LM-05L-935-120-ID-UNV-S-SM-STD-XX	HE WILLIAMS	CXC-4'00-L6/835-25-D-DIM-UNV			FOCAL POINT	FCOL-HN-500LF-35K-1C-UN V-LD1-CV-4' 35K 80CRI WH MVOLT 35K 80CRI WH	LITECONTROL	30-CC-AI-4'-WHS-35K9-I050-D01-UNV	LUMENSENSE	4-LSC1-550LP-DIM10-MVOLT-120 X120D-35K-90		
F8	COVE (AIMABLE) 4' FIXTURE 5000 LM.	28W LED	3500 K	120 V/1-45 VA	LEDALITE	TC08L83515WN-SN-04-DE	COOPER IO LED	LM-10L-935-120-ID-UNV-S-SM-STD-XX	HE WILLIAMS	CXC-4'00-L10/835-25-D-DIM-UNV			FOCAL POINT	FCOL-HN-1000LF-35K-1C-UNV-LD1-CV-4'35K 80CRI WH	LITECONTROL	30-CC-AI-4'-WHS-35K9-I050-D01-UNV	LUMENSENSE	4-LSC1-1100LP-DIM10-MVOLT-120X120D-35K-90		
F9	LOW PROFILE COVE	20W LED	3500 K	120 V/1-4 VA	TIVOLI	CVLID-35K-XX-120	COOPER IO LED	CS-SL-8SCT-120-ID-UNV-W -SA-STD-1F	CURRENT	GEWWNL2-35K-A										
F10	6" APERTURE RECESSED DOWNLIGHT WITH LED RETROFIT KIT AND SHALLOW HOUSING. WHITE TRIM AND LENSE. 1-1/4" CEILING FLANGE. RIM.	13W LED 1000 LM	3500 K	120 V/1-40 VA	CURRENT-GLI	LRXBR61X9CWVQ/FRA ME6R	HALO	LT560WH12930 E7ICAT	LITON	CH618UE-D10 CR6L22SW-T30	ELITE	RL679-1100L-CCT	LITHONIA	WF6 LED 27K30K35K MVOLT 90CRI MW	DMF	DRDH-N-IC-6-10O/ DRD2M-10-9-30-A DRD2T-R-6-S-WH	PRESCOLITE	LBRA-6RD-T-10L-CS9-WH / LBRA-RD-H		
F11	6" APERTURE DOWNLIGHT WITH WHITE TRIM. DAMP LOCATION RATED, IC RATING 4000K	27W LED 2000 LM	4000 K	120 V/1-30 VA	CURRENT-GLI	LRXBR61X9CWVQ/FRA ME6R	PEACHTREE	8BLRD-25-40K-80-SH-TRW-120	SPECTRUM	RDF08LEDXT 30L 40K-MD EX BH27 RD8FXT SG	ELCO	E8LF-U-20-D/E810L-2040W	LITON	CH828UE-D10 CR8L22SW-T30	HALO	PR820D010 PR8M34MDMW				
F11b	6" APERTURE DOWNLIGHT WITH WHITE TRIM.	LED 2000 LM	3500 K	120 V/1-20 VA	CURRENT-GLI	LRXBR61X9CWVQ/FRA ME6R	PEACHTREE	8BLRD-25-30K-80-SH-TRW-120	SPECTRUM	RDF08LEDXT 30L 40K-MD EX BH27 RD8FXT SG	ELCO	E8LF-U-20-D/E810L-2040W	LITON	CH828UE-D10 CR8L22SW-T30	HALO	PR820D010 PR8M34MDMW				
F12	30" DIAMETER DOUBLE SEALED BOWL FIXTURE WITH MACHINED ALUMINUM TRIM RING. WITH FULLY SEALEDDOUBLE BOWL BOTTOM OF FIXTURES ELEV. = 113'-0" 50% UPLIGHT, 50% DOWNLIGHT.	96W LED 10,000 LM	3500 K	120 V/1-180 VA	VICTOR ILLUMINATING	VLD4130-ACC 90LED-3K-SA-XX-120-SD-DM7	EVERGREEN	SHP-RBR-P30-136L-9-WF9-30K-DIM-CLPT	LIGHTWAY	MONH-30-LED-L1A-2-SCBA-WSA	CRAFT METAL	SC3612L-EEF-120/277 PC-SA-AD-D1-LDS DBL BOWL	SPECTRUM	SPEC18-0004C	LE LAMPISTE	BWL-S-D-36/XX/36-LED 106-DBWL-LDS-CLA-SA				
F13	36" DIAMETER DOUBLE SEALED BOWL FIXTURE WITH MACHINED ALUMINUM TRIM RING. FULLY SEALED DOUBLE BOWL BOTTOM OF FIXTURES ELEV. = 112'-0". MINIMUM LUMENS 10,000.	133W 14,000 LM	3500 K	120 V/1-270 VA	VICTOR ILLUMINATING	VLD4136-ACC 90LED-3K-SA-XX-120-SD-DM7	EVERGREEN	SHP-RBR-P36-156L-9-WF9-30K-DIM-CLPT	LIGHTWAY	MONH-36-LED-L1A-2-SCBA-WSA	CRAFT METAL	SC1809S-EDS-120/277 PC-SA-AD-D1-LED	SPECTRUM	SPEC18-0007B	LE LAMPISTE	BWL-WS-D-13/7/5-LED 13-LDS-CLA-SA				
F17	SURFACE CYLINDRICAL SPOT LAMP HOLDER COMPATIBLE WITH TRACK.	1-PAR 38 LED REPLACEMENT 2000 LM DIMMABLE REPLACEMENT 2000 LM DIMMABLE (i.e. OSRAM 79363)	3500 K	120 V/1-28 VA	NORA	NTH-131W / NT-366W	HALO	L80815FL9030P	SATCO	90-1502	SISTEMALUX	1590-830-45-120-01-LTE	JUNO	T283L 30K 80CRI PDIM FL WH	LITON	LT850-W/ LP913W				
F19	SURFACE CERAMIC LAMP HOLDER. PROVIDE METAL WIRE GUARD.	1-A19 LED REPLACEMENT 1000 LM	3500 K	120 V/1-60 VA	LEVITON	49875	P&S	274	ARROW-HART	604	BRYANT	5228								
F20	18' ALUMINUM POLE HINGED PARKING AREA LIGHTING 208 VOLTS, SEE FIXTURE SCHEDULE NOTE. TYPE III DISTRIBUTION. POLE MOUNTED LIGHT FIXTURE. PROVIDE WITH VANDAL RESISTANT HARDWARE.	50W DIMMABLE LED 6000 LM	4000 K	Power 120 V/1-70 VA	GARDCO	ECF-S-32L-530-NW-G2 AR-3-UNV-DD-F1 -SCBA	BEACON	VP1-160L-50-4K7-3-UNV-A4 -WHS/RSS-B-S-1 8-40-A-1-B 3-WHS	ALS	P-50-40-3M-RL-WH-UD RSHA-5183-AB-D 1-WH	MCGRAW EDISON	GLEON-AE-01-LED-E1-T3-SCBA/S SA18D4-H-SCBA-DM10-BC	LITHONIA	RSX1 LED P2 40K R3 MVOLT SPA DDBXD SSAH 18 4G DM19AS DDBXD	LSI	MRS-LED-6L-SIL-3-UNV-DIM-30-70C RI-XX-4RHPB3-A 125-18'-S-XX				
F21	WALL MOUNTED. WET LOCATION FINISH TO MATCH PARKING LOT FIXTURES. PROVIDE FIXTURE WITH INTEGRAL BACK BOX. PROVIDE WITH VANDAL RESISTANT HARDWARE.	27W LED 2000 LM	3000 K	120 V/1-40 VA	TRACELITE	TLED112P-42-VS-4K-WH -TRH	LUMARK	AXCS2A DDBXD	STONCO	LPW16-58-WW-G3 UNV-SCBA	LSI	WPSLS-2L-30-XX	LITHONIA	WDGE1LED-P1-40K-80CRI-VW-MVOLT	HUBBELL	SG1-20-4K7-3-UNV-A4-WHS				
F24	EXIT SIGN	5W LED		<varies>	COMPASS	CEG	EVENLITE	TLX-EM-GU-W	HE WILLIAMS	EXIT-G-EM-WHT-D	LSI	EX G U WB WH	ISOLITE	RL-EM-G-WH-(WG2)	CHLORIDE	VEGWEM	LIFE SAFETY LIGHTING	LSX2GWEM/LSCS-1	SYLVANIA	60762

bhd ARCHITECTS
www.bhdarchitects.com
Phone 801.571.0010
Fax 801.571.0303
Toll Free 888.571.0010
63 East Wadsworth Park Drive
Suite 205 Draper, Utah 84020

LICENSED PROFESSIONAL ENGINEER
No. 5148728
DAVID G. HINCKLEY
8-19-24
STATE OF UTAH

SPECTRUM ENGINEERS
324 S. State St., Suite 400
Salt Lake City, UT 84111
800-678-7077
801-328-5151
fax: 801-328-5155
www.spectrum-engineers.com

THE CHURCH OF JESUS CHRIST OF LATTER-DAY SAINTS

Orem YSA 3rd 10 Ward Building
Orem UT YSA 3rd Stake

Approx. 1700 West 575 South
Vineyard, Utah 84059

Owner #: 370-187a
Plan Series: 2024 10 Ward SC
County Parcel: 37:228:0001
BID #: 2344
Date: 15 Aug 2024

Drawing Issue and Revision Schedule

#	Date	Description
1	15 Aug 2024	Bid Documents

Lighting Fixture Schedule

E604

Autodesk Docs://240504 - Orem YSA 3rd 10 Ward Stake Center/240504-Elec Central.rvt
8/19/2024 9:03:21 PM

Distribution Wiring Schedule

Load Name	# of Runs	Wire Size	Wire Type	Breaker Rating	True Current	Neutral Rating	Bussing
Short Circuit Rating							
PANEL LC1	1	3-#1/0, 1-#1/0, 1-#4	Al XHHW2	100 A	41 A	100%	ALUMINUM
22000							
PANEL LC2	1	3-#1/0, 1-#1/0, 1-#4	Al XHHW2	100 A	46 A		
22000							
PANEL LC3	1	3-#1/0, 1-#1/0, 1-#4	Al XHHW2	100 A	65 A	100%	ALUMINUM
22000							
PANEL LC4	1	3-#1/0, 1-#1/0, 1-#4	Al XHHW2	100 A	62 A	100%	ALUMINUM
22000							
PANEL LC5	1	3-#1/0, 1-#1/0, 1-#4	Al XHHW2	100 A	57 A		
22000							
PANEL LC6	1	3-#1/0, 1-#1/0, 1-#4	Al XHHW2	100 A	47 A	100%	ALUMINUM
22000							
PANEL LN	1	3-#1/0, 1-#1/0, 1-#4	Al XHHW2	100 A	24 A	100%	ALUMINUM
22000							
PANEL LS	1	3-#1/0, 1-#1/0, 1-#4	Al XHHW2	100 A	44 A	100%	ALUMINUM
22000							
PANEL M	4	4 runs of 3-#350, 1-#350, 1-# 4/0	Al XHHW2	1000 A	857 A	100%	ALUMINUM
22000							
PANEL MN	1	3-#250, 1-#250, 1-#2	Al XHHW2	225 A	161 A	100%	ALUMINUM
22000							
PANEL MS	1	3-#300, 1-#300, 1-#2	Al XHHW2	250 A	169 A	100%	ALUMINUM
22000							
PANEL RN	1	3-#1/0, 1-#1/0, 1-#4	Al XHHW2	125 A	60 A	100%	ALUMINUM
22000							
PANEL RS	1	3-#2/0, 1-#2/0, 1-#4	Al XHHW2	150 A	81 A	100%	ALUMINUM
22000							

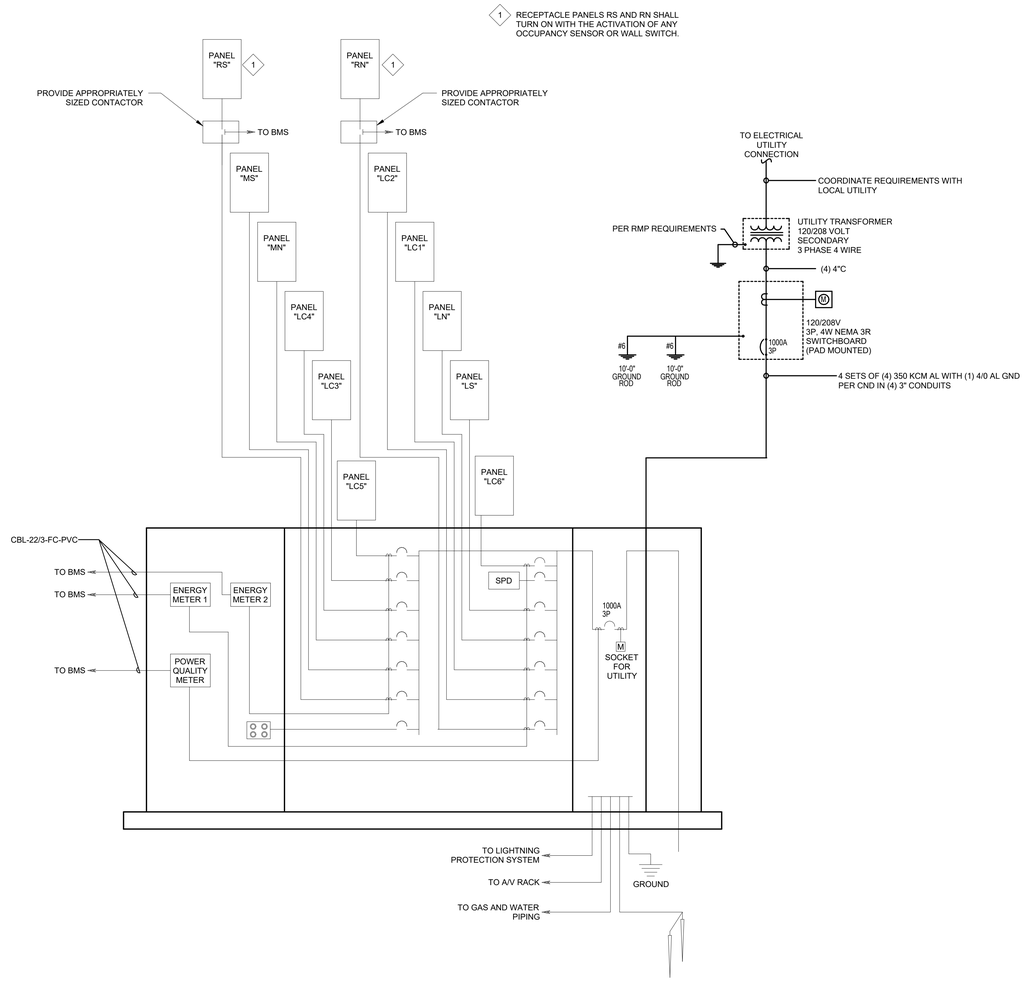

1 SINGLE LINE DIAGRAM
NOT TO SCALE

bhd ARCHITECTS
www.bhdarchitects.com
Phone 801.571.0010
Fax 801.571.0303
Toll Free 888.571.0010
65 East Wadsworth Park Drive
Suite 205 Draper, Utah 84020

LICENSED PROFESSIONAL ENGINEER
No. 5148728
DAVID G. HINCKLEY
8-19-24
STATE OF UTAH

SPECTRUM ENGINEERS
324 S. State St., Suite 400
Salt Lake City, UT 84111
800-678-7077
801-328-5151
fax: 801-328-5155
www.spectrum-engineers.com

THE CHURCH OF JESUS CHRIST OF LATTER-DAY SAINTS

Orem YSA 3rd 10 Ward Building
Orem UT YSA 3rd Stake

Approx. 1700 West 575 South
Vineyard, Utah 84059

Date: 15 Aug 2024
BID #: 2244
County Parcel: 37-226-0001
Plan Series: 2024 10 Ward SC
Owner #: 390-1816

Drawing Issue and Revision Schedule

#	Date	Description
1	15 Aug 2024	Bid Documents

Power Single Line Diagram

E605

Autodesk Docs://240504 - Orem YSA 3rd 10 Ward Stake Center/240504-Elec Central.rvt
8/19/2024 9:03:23 PM

Chapel

BILL OF MATERIALS

LMRC_213 (1), Three Relay Room Controller
LMRC_212 (1), Three Relay Room Controller
LMPC_100-5 (4), Digital PIR Ceiling Mount Occupancy Sensor (extended height)
LMSW_101 (3), 1-Button Digital Wall Switch
LMSW_104 (1), 4-Button Digital Wall Switch

SEQUENCE OF OPERATION

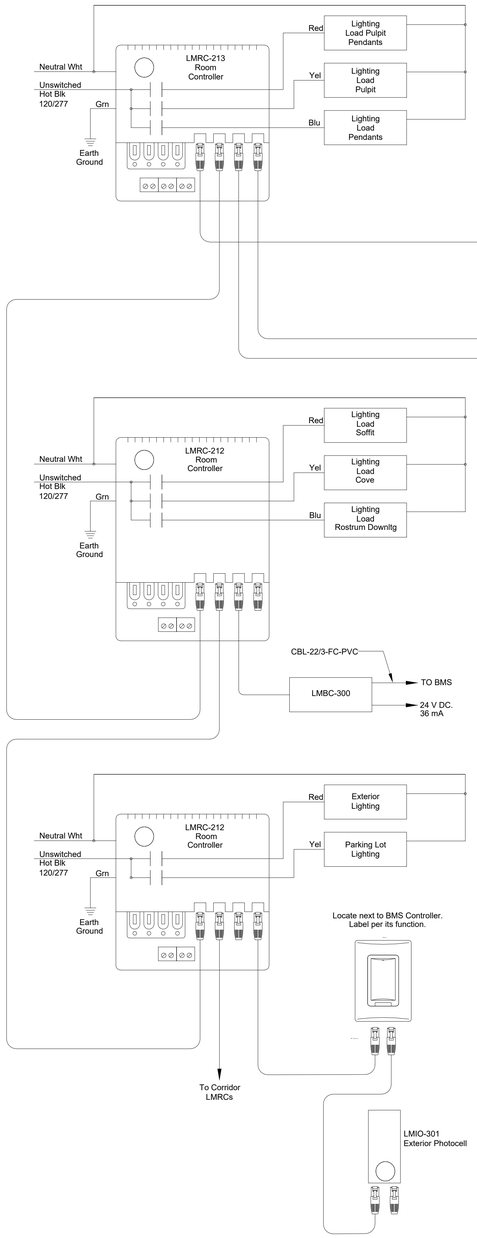

Overflow\Cultural

BILL OF MATERIALS

LMRC_212 (1), Two Relay Room Controller with 0-10v Dimming
LMRC_101 (1), Single Relay Room Controller
LMDM_101 (4), Digital Dimming Wall Switch
LMPC_100 (4), Digital PIR Ceiling Mount Occupancy Sensor
LMIO_102 (1), Digital Partition Interface

SEQUENCE OF OPERATION

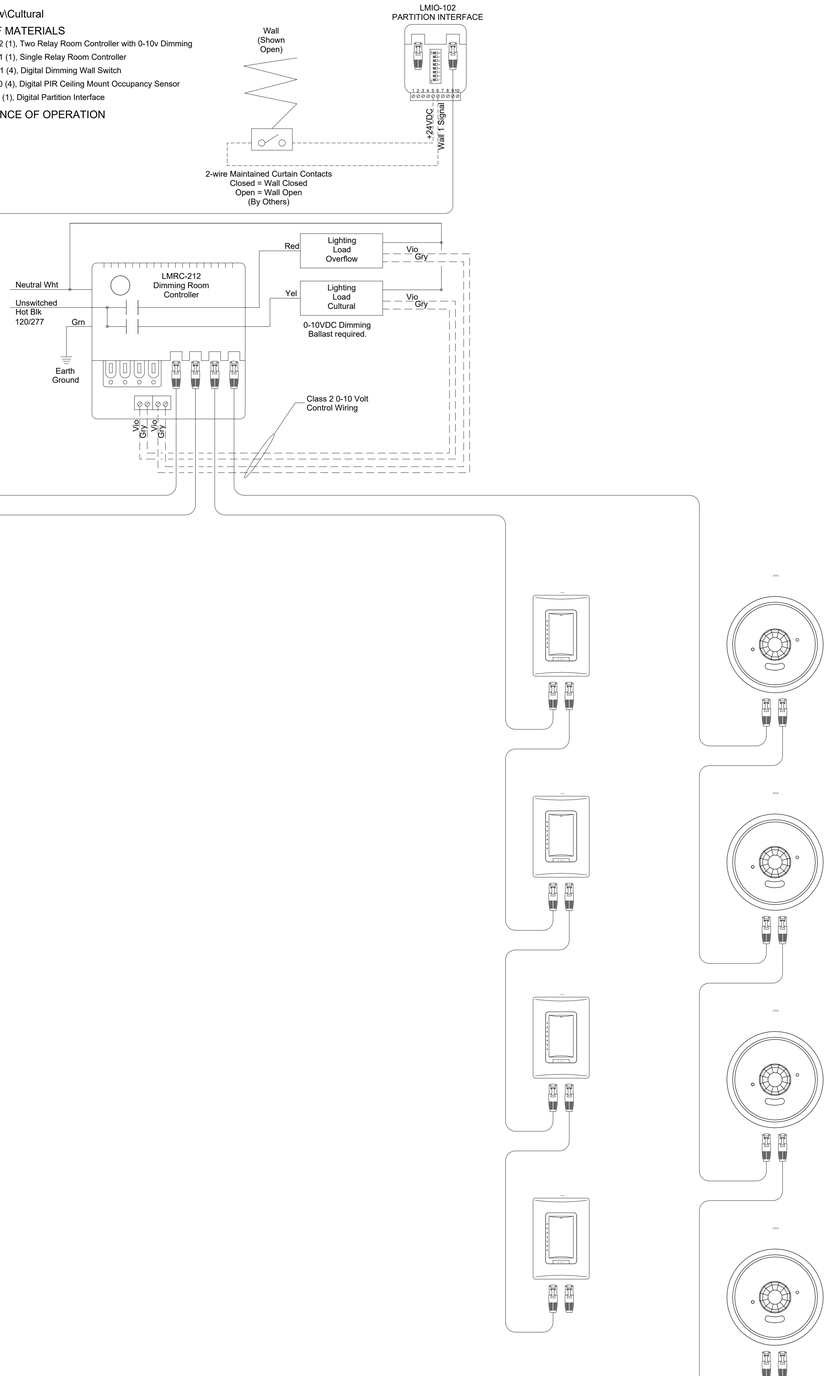

bhd ARCHITECTS
www.bhdarchitects.com
Phone 801.571.0010
Fax 801.571.0303
Toll Free 888.571.0010
65 East Wadsworth Park Drive
Suite 205 Draper, Utah 84020

LICENSED PROFESSIONAL ENGINEER
No. 5148728
DAVID G. HINCKLEY
8-19-24
STATE OF UTAH

SPECTRUM ENGINEERS
324 S. State St., Suite 400
Salt Lake City, UT 84111
800-678-7077
801-328-5151
fax: 801-328-5155
www.spectrum-engineers.com

THE CHURCH OF JESUS CHRIST OF LATTER-DAY SAINTS

Orem YSA 3rd 10 Ward Building
Orem UT YSA 3rd Stake

Approx. 1700 West 575 South
Vineyard, Utah 84059

Date: 13 Aug 2024
BHD #: 2344
County Parcel: 37:228:0001
Plan Series: 2024 10 Ward SC
Owner #: 390-1878

Drawing Issue and Revision Schedule

#	Date	Description
1	13 Aug 2024	Bid Documents

Lighting Control Wiring Diagrams

E606

2 CHAPEL AND EXTERIOR LIGHTING CONTROL WIRING DIAGRAM
NO SCALE

1 OVERFLOW/CULTURAL CENTER LIGHTING CONTROL WIRING DIAGRAM
NO SCALE

Autodesk Docs://240504 - Orem YSA 3rd 10 Ward Stake Center/240504-Elec Central.rvt
8/19/2024 9:03:24 PM

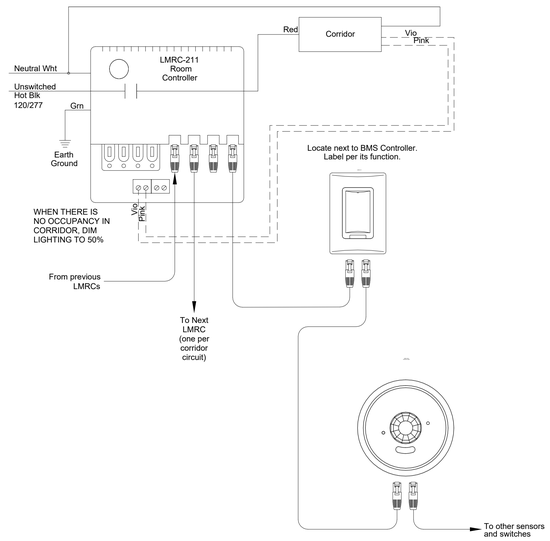

2 HALLWAYS/FOYERS LIGHTING CONTROL WIRING DIAGRAM

NO SCALE

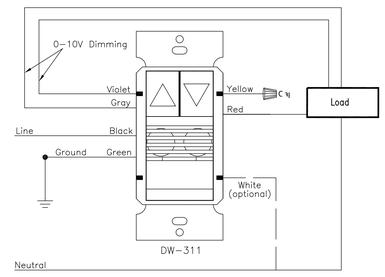

1 TYPICAL WALL SWITCH WIRING DIAGRAM

12" = 1'-0"

bhd ARCHITECTS
www.bhdarchitects.com
Phone 801.571.0010
Fax 801.571.0303
Toll Free 888.571.0010
65 East Wadsworth Park Drive
Suite 205 Draper, Utah 84020

LICENSED PROFESSIONAL ENGINEER
No. 5148728
DAVID G. HINCKLEY
8-19-24
STATE OF UTAH

SPECTRUM ENGINEERS
324 S. State St., Suite 400
Salt Lake City, UT 84111
800-678-7077
801-328-5151
fax: 801-328-5155
www.spectrum-engineers.com

THE CHURCH OF JESUS CHRIST OF LATTER-DAY SAINTS

Orem YSA 3rd 10 Ward Building
Orem UT YSA 3rd Stake

Approx. 1700 West 575 South
Vineyard, Utah 84059

Plan Series: 2024 10 Ward SLC
County Parcel: 37-228-0001
BHD #: 2344
Date: 15 Aug 2024
Owner #: 390-1816

Drawing Issue and Revision Schedule

#	Date	Description
1	15 Aug 2024	Bid Documents

Lighting Control Wiring Diagrams

E607

Autodesk Docs://240504 - Orem YSA 3rd 10 Ward Stake Center/240504-Elec Central.rvt
8/19/2024 9:03:25 PM

SHEET KEYNOTES

1. PROVIDE GROUNDING COMPONENTS AS SHOWN ON DETAIL 3/ET602.
2. MOUNT JUNCTION BOXES HORIZONTALLY AND CENTERED IN HARDWOOD BASE ON FRONT OF ROSTRUM.
3. LOOP EXTRA CABLES THROUGH JUNCTION BOXES. DO NOT CUT.
4. ORGAN INPUT. LEAVE 5'-0" PIGTAIL AT ROSTRUM. COIL 10'-0" OF CABLE IN RACK AND LABEL.
5. INSTALL 4 EACH, 2.5" CONDUITS TO MECHANICAL PLATFORM WALKWAY. CONDUIT STUBS TO BE 4" ABOVE PLATFORM FLOOR NEXT TO WALL.
6. PHONE CONNECTION TO FIRE ALARM PANEL.
7. SEE ARCHITECTURAL ROSTRUM MILLWORK DETAILS FOR ROUGH-IN AND MOUNTING OF PULPIT MICROPHONE.
8. PROVIDE 1 EACH, 1.5" CONDUIT WITH 8.25" MINIMUM BEND RADIUS TO IRRIGATION CONTROLLER LOCATION WITH ONE "D" TYPE CABLE AND DATA JACK.
9. FIRE ALARM SOUND SYSTEM MUTE CONNECTION.
10. INSTALL ON VERTICAL FACE OF RISER.
11. MOUNT DATA OUTLET, HDMI AND USB CONNECTION PANEL IN FLOOR BOX. SEE DETAIL 2/ET601 FOR CONDUIT SIZES AND DESTINATIONS.
12. 1.25" CONDUIT.
13. MOUNT DATA OUTLET AT +4'-0" AFF FOR LIGHTING RELAY PANEL. COORDINATE LOCATION WITH ELECTRICAL INSTALLER.
14. SEE SHEET TT601 FOR CABLE TO CP, AND CC. INSTALL CONDUITS PER GENERAL NOTE #1, SHEET ET101.
15. MOUNT 'CP3' BELOW 'CC' AT ELECTRICAL OUTLET HEIGHT. SEE DETAIL 9/ET601.
16. INSTALL DATA OUTLET ADJACENT TO CAMERA ENCLOSURE AT 7'-6" AFF.
17. TO PULPIT MOTOR CONTROL.
18. PROVIDE (1X) 1.25" CONDUIT AND (2X) 1.0" CONDUITS BETWEEN PULPIT AND TECH ROOM 212.
19. REFER TO UTILITY PLAN FOR FIBER OPTIC CONDUITS AND BOXES ON SITE.
20. INSTALL 'HBR' AND DATA JACK IN LARGE BACK BOX BEHIND TV MONITOR.
21. INSTALL DATA JACK FOR FUTURE TV MONITOR AT 72" AFF ADJACENT TO POWER OUTLET.

GENERAL SHEET NOTES

1. EACH VOICE AND DATA OUTLET SHALL HAVE A MINIMUM 1" CONDUIT FROM OUTLET TO EQUIPMENT RACK #2. INSTALLER IS TO BE FAMILIAR WITH, AND COMPLY WITH THE ANSI/TIA/EIA/569-C STANDARDS. CONDUIT SHALL HAVE A TOTAL DISTANCE OF NO MORE THAN 230'-0". IF TOTAL BENDS ARE MORE THAN 180 DEGREES, INCREASE CONDUIT SIZE ONE TRADE SIZE FOR EVERY ADDITIONAL 90 DEGREES. TYPICAL OF ALL LOCATIONS.
2. INSTALL EACH CABLE TYPE IN A SEPARATE CONDUIT.

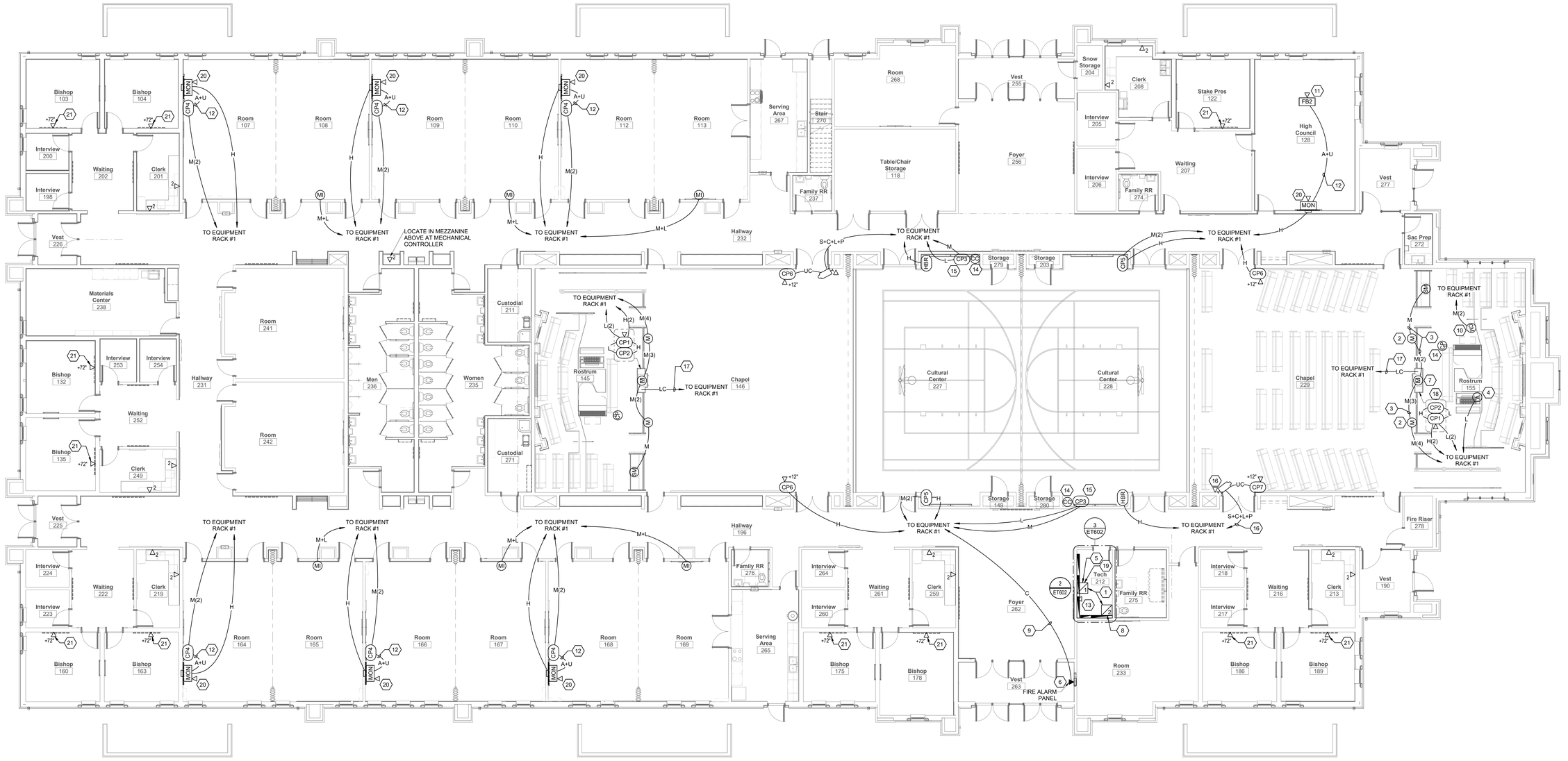

1 MAIN FLOOR AV FLOOR PLAN
SCALE: 1/8" = 1'-0"

bhd ARCHITECTS
www.bhdarchitects.com
Phone 801.571.0010
Fax 801.571.0303
Toll Free 888.571.0010
45 East Wadsworth Park Drive
Suite 205 Draper, Utah 84020

LICENSED PROFESSIONAL ENGINEER
No. 5148728
DAVID G. HINCKLEY
8-19-24
STATE OF UTAH

SPECTRUM ENGINEERS
324 S. State St., Suite 400
Salt Lake City, UT 84111
800-678-7077
801-328-5151
fax: 801-328-5155
www.spectrum-engineers.com

THE CHURCH OF JESUS CHRIST OF LATTER-DAY SAINTS

Orem YSA 3rd Stake
10 Ward Stake Center
Approx. 1700 West 575 South
Vineyard, Utah 84059

Owner #: 590-1816
Plan Series: 2024 10 Ward SC
County Parcel: 37:228:0001
BHD #: 2344
Date: 9 Jul 2024

Drawing Issue and Revision Schedule		
#	Date	Description
1	15 Aug 2024	Bid Documents

MAIN FLOOR AV FLOOR PLAN

ET101

Printed 8/14/2024 8:08:41 PM

SHEET KEYNOTES

1. MOUNT DATA OUTLET FLUSH IN CEILING. COORDINATE WITH DIVISION 27 1501 INSTALLER (TYPICAL).
2. MOUNT DATA OUTLET IN EQUIPMENT MEZZANINE ABOVE, NEXT TO MECHANICAL SYSTEM WEB INTERFACE. COORDINATE WITH MECHANICAL INSTALLER.
3. MOUNT DATA OUTLET IN EQUIPMENT MEZZANINE ABOVE, NEXT TO LIGHTING CONTROLS. COORDINATE EXACT LOCATION WITH LIGHTING INSTALLER.
4. ENSURE THE JUNCTION BOX FOR AUDIO CONTROL IS NOT BEHIND DISPLAY BOARD.
5. INSTALL 'ALS' ANTENNA VERTICALLY IN ATTIC SPACE ABOVE CHAPEL.

GENERAL SHEET NOTES

1. MOUNT ALL LOUDSPEAKER BACKBOXES ON TILE BRIDGES IN SUSPENDED TILE CEILINGS. SECURE ALL BACKBOXES WITH SEISMIC RESTRAINT CABLE ACCORDING TO 4/ET601.

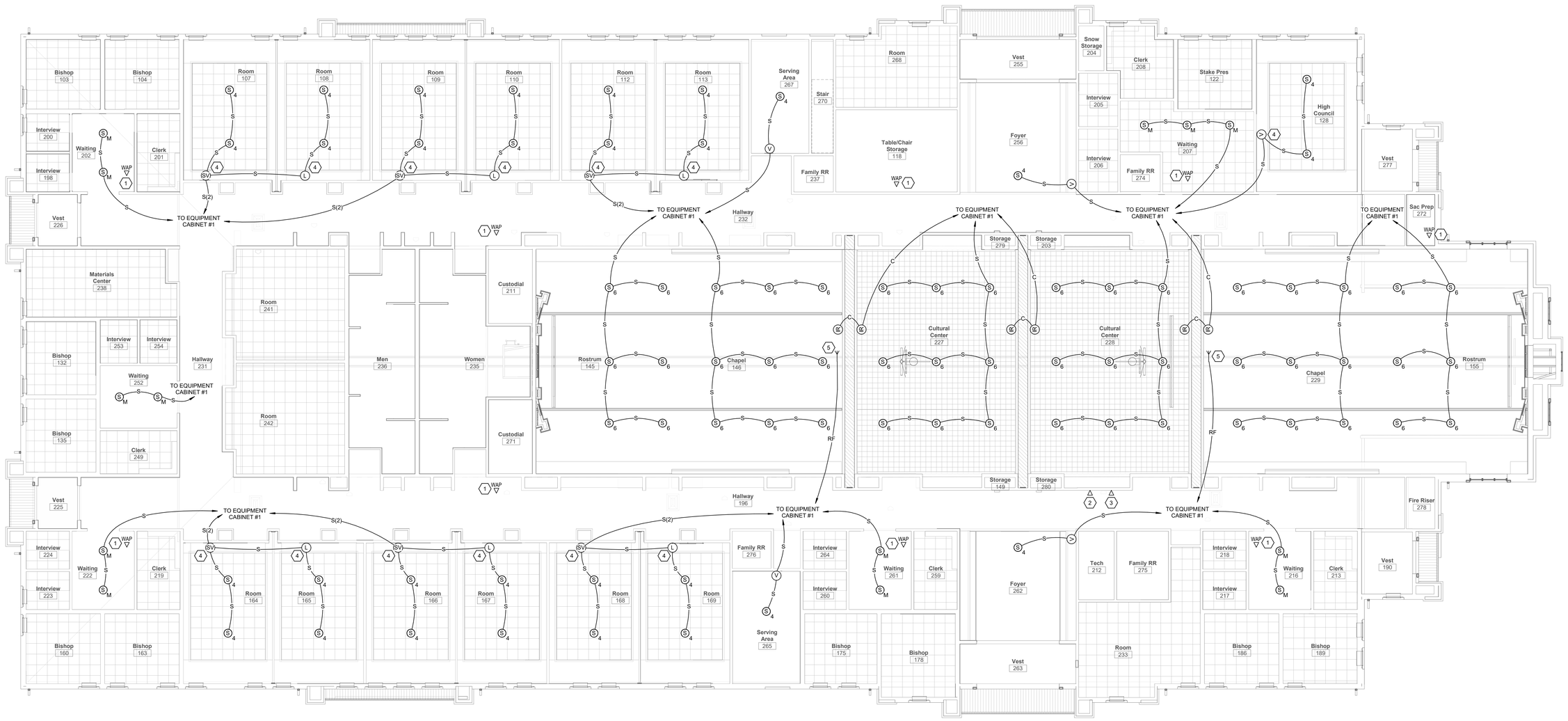

1 MAIN FLOOR AV CEILING PLAN
SCALE: 1/8" = 1'-0"

bhd ARCHITECTS
www.bhdarchitects.com
Phone 801.571.0010
Fax 801.571.0303
Toll Free 888.571.0010
65 East Wadsworth Park Drive
Suite 205 Draper, Utah 84020

LICENSED PROFESSIONAL ENGINEER
No. 5148728
DAVID G. HINCKLEY
8-19-24
STATE OF UTAH

SPECTRUM ENGINEERS
324 S. State St., Suite 400
Salt Lake City, UT 84111
800-678-7077
801-328-5151
fax: 801-328-5155
www.spectrum-engineers.com

THE CHURCH OF JESUS CHRIST OF LATTER-DAY SAINTS

Orem YSA 3rd Stake
10 Ward Stake Center

Approx. 1700 West 575 South
Vineyard, Utah 84059

Owner #: 370-1874
Plan Series: 2024 10 Ward SC
County Parcel: 37:226:0301
BID #: 2344
Date: 9 Jul 2024

Drawing Issue and Revision Schedule		
#	Date	Description
1	15 Aug 2024	Bid Documents

MAIN FLOOR AV CEILING PLAN

ET102

Printed 8/14/2024 8:08:46 PM

GENERAL PROJECT NOTES

1. NO CHANGES SHALL BE MADE WITHOUT THE PROJECT AV/STRUCTURED CABLING CONSULTANT'S WRITTEN CONSENT.
2. REFER TO DRAWINGS FOR EXACT NUMBER OF COMPONENTS USED IF NOT SPECIFIED IN EQUIPMENT LIST.
3. PROVIDE CONDUIT FOR ALL LOW VOLTAGE CABLES SHOWN ON ET SHEETS AS FOLLOWS:
   - 3.1. PROVIDE CONDUIT FOR H,C,D,V, AND S CABLES FROM DEVICE TO MECHANICAL EQUIPMENT PLATFORM ABOVE TECHNOLOGY ROOM 154. CABLES MAY THEN RUN EXPOSED AND STUB DOWN TO LADDER RACK. PROTECT EXPOSED CABLING ACCORDING TO DIVISION 27. ALLOW NO OTHER CABLE TO ATTACH TO TECHNOLOGY CABLES.
   - 3.2. PROVIDE CONDUITS UNDER SLAB FOR ALL CABLING FROM ROSTRUM TO TECHNOLOGY ROOM EQUIPMENT RACK.
   - 3.3. PROVIDE CONDUIT UNDER SLAB FOR ALL "M", "B", AND "L" CABLES FROM DEVICE TO TECHNOLOGY ROOM EQUIPMENT RACK.
   - 3.4. ALL CABLING IN WALLS SHALL BE IN CONDUIT.
   - 3.5. SIZE CONDUIT AS NOTED OR ACCORDING TO CODE WHICHEVER IS GREATER WITH 0.75" MINIMUM.
   - 3.6. INSTALL DIFFERENT CABLE TYPES IN SEPARATE CONDUITS UNLESS NOTED OTHERWISE. SEPARATE CABLE TYPES OUTSIDE OF CONDUIT BY 12" MINIMUM.
   - 3.7. ALL CONDUITS WITH OR WITHOUT CABLES SHALL HAVE A PULL STRING.
   - 3.8. LABEL ALL CONDUITS WITH DESTINATION.
   - 3.9. DEBUR ALL CONDUIT STUBS AND FIT WITH PLASTIC BUSHING.
   - 3.10. RACEWAY SHALL BE FURNISHED AND INSTALLED BY DIVISION 26. CABLING IS FURNISHED AND INSTALLED BY DIVISION 27. RACEWAY, CABLING, AND TERMINATIONS SHALL BE ACCORDING TO 27 1501.
4. DIVISION 26 INSTALLER IS TO PROVIDE ALL ROUGH-IN INDICATED FOR DIVISION 27 INSTALLER. ALL ROUGH-IN SHALL COMPLY WITH ANSI/TIA/EIA 569-B STANDARDS. THIS INCLUDES, BUT IS NOT LIMITED TO, THE LIMITATION OF (2) 90° BEND FOR CONDUIT. IT IS THE DIVISION 26 INSTALLERS RESPONSIBILITY TO ENSURE COMPLIANCE WITH STANDARD.
5. REFER TO A400 SERIES SHEETS FOR ADDITIONAL INFORMATION ON ROUGH-IN. SEE "A" SHEETS FOR MOUNTING DETAILS IN MILLWORK.
6. SPEAKER TRIM RINGS ARE FURNISHED BY DIVISION 27 AND INSTALLED BY DIVISION 26.
7. "ET" SHEETS SHOW WORK AND MATERIALS BY DIVISION 26 AND DIVISION 27. SEE SPECIFICATIONS AND DRAWING NOTES FOR RESPONSIBILITY FOR EACH ITEM.
8. PROVIDE GROUNDING AS SHOWN ON DRAWINGS AND IN COMPLIANCE WITH CODE AND ANSI/TIA/EIA 569-B.
9. DIVISION 26 SHALL FURNISH AND INSTALL SEISMIC RESTRAINT CABLE TO ALL SPEAKER BACK BOXES. DIVISION 27 SHALL ATTACH SEISMIC RESTRAINT CABLE TO SPEAKERS.

ELECTRICAL SYSTEM EQUIPMENT LIST

SYM	DESCRIPTION	QTY	NOTES
M / MW	2-1/8" DEEP, SINGLE GANG BOX MOUNTED AT ELECTRICAL OUTLET HEIGHT, OR AS NOTED	OFP	
CP1 / CP2	2-1/8" DEEP, TRIPLE GANG BOX, MOUNTED ON PULPIT SIDE	OFP	SEE DETAIL 8/TA501 COORDINATE WITH MILLWORK DETAILS ON ARCHITECTURAL SHEETS
CP4 / CP5	MIN 3" DEEP TRIPLE GANG STEEL BOX, W/ 3/4" DEEP MUD RING, MOUNTED AT ELECTRICAL OUTLET HEIGHT	OFP	SEE DETAILS 4/ET602, 5/ET602, 2/TA502, AND 3/TA502
CP3 / CP6 / CP7 / CP8	3-1/4" DEEP, 4-11/16 SQUARE BOX W/ DOUBLE GANG PLASTER RING MOUNTED AT ELECTRICAL OUTLET HEIGHT	OFP	
HBR	3-1/4" DEEP, 4-11/16 SQUARE BOX W/ 5/8" DEEP SINGLE GANG PLASTER RING MOUNTED AT ELECTRICAL OUTLET HEIGHT, OR AS NOTED	OFP	
V / L	3-1/4" DEEP, 4-11/16 SQUARE BOX W/ 5/8" DEEP SINGLE GANG PLASTER RING MOUNTED AT ELECTRICAL SWITCH HEIGHT	OFP	SEE DETAIL 6/TA501
WAP ▽	2-1/8" DEEP, SINGLE GANG BOX W/ 5/8" DEEP, SINGLE GANG PLASTER RING FLUSH MOUNTED IN CEILING	OFP	
▽ / ▽²	2-1/8" DEEP, DOUBLE GANG BOX MOUNTED AT ELECTRICAL OUTLET HEIGHT OR AS NOTED W/ 5/8" DEEP, SINGLE GANG PLASTER RING	OFP	
▼	2-1/8" DEEP, DOUBLE GANG BOX MOUNTED AT FIRE ALARM PANEL W/ 5/8" DEEP, SINGLE GANG PLASTER RING, OR AS NOTED	OFP	COORDINATE EXACT LOCATION WITH FIRE ALARM INSTALLER
SV	3-1/4" DEEP, 4-11/16" SQUARE BOX W/ 5/8" DEEP, DOUBLE GANG PLASTER RING MOUNTED AT ELECTRICAL SWITCH HEIGHT	OFP	SEE DETAIL 5/TA501
SVM	3-1/4" DEEP, 4-11/16" SQUARE BOX W/ 5/8" DEEP, DOUBLE GANG PLASTER RING MOUNTED AT ELECTRICAL SWITCH HEIGHT	OFP	SEE DETAIL 4/TA501
CC	3-1/2" DEEP, TRIPLE GANG MASONRY BOX ORIENTED W/ LONG DIMENSION VERTICAL AS SHOWN IN WALL AT +5'-0" ABOVE FINISHED FLOOR	1	SEE DETAILS 7/ET601 & 9/ET601
IR	2-1/8" DEEP, DOUBLE GANG BOX MOUNTED IN DOOR HEADER	OFP	SEE DETAIL 4/ET601
SM	2-1/8" DEEP, SINGLE GANG BOX SURFACE MOUNTED	1	SEE DETAIL 3/ET601 COORDINATE WITH MILLWORK DETAILS ON ARCHITECTURAL SHEETS
CM	2-1/8" DEEP, SINGLE GANG BOX MOUNTED IN VERTICAL FACE OF RISER	OFP	
CP	CONTROL PEDESTAL, STUB CONDUITS THROUGH FLOOR	1	COORDINATE WITH MILLWORK DETAILS ON ARCHITECTURAL SHEETS
A	2-1/8" DEEP, SINGLE GANG BOX MOUNTED IN RECESS FOR ORGAN CONSOLE	1	
	CAMERA ENCLOSURE	OFP	CLEAR TOUCH CTS-WMNTB-RL45 PAINT TO MATCH WALL. FURNISHED BY DIV 27, INSTALLED BY DIV 26
FB2	FLOOR BOX, MIN. 4" DEEP, STEEL, WITH ACCESSORIES REQUIRED TO INSTALL ON-GRADE ARCHITECT TO CHOOSE COLOR AND TYPE OF COVER	1	WIREMOLD RFB-9-OG FSR FL-500P-4-B / FL-500-X / FL-GRD4 SEE DETAILS 1/ET601 AND 2/ET601
1	AV EQUIPMENT CABINET W/ 12"x12"x4" METAL JUNCTION BOX RECESSED IN WALL	OFP	CABINET FURNISHED AND INSTALLED BY AV INSTALLER, SEE DETAILS 8/ET601, 2/ET602, 3/ET602, AND 1/TA501
2	DATA EQUIPMENT RACK, SWING FRAME	OFP	FURNISHED AND INSTALLED BY DIVISION 27 SEE DETAILS 2/ET602, 3/ET602, AND 7/TT601
S 4	SPEAKER MOUNTING RING	OFP	FURNISHED BY DIVISION 27, INSTALLED BY DIVISION 26, SEE DETAIL 5/ET601
S M	SPEAKER ENCLOSURE	OFP	FURNISHED BY DIVISION 27, INSTALLED BY DIVISION 26, SEE DETAIL 5/ET601
S 6	SPEAKER MOUNTING RING	OFP	FURNISHED BY DIVISION 27, INSTALLED BY DIVISION 26, SEE DETAIL 5/ET601
	WALL FIELD, PRE-TREATED PAINTED 0.75" PLYWOOD	OFP	FURNISHED AND INSTALLED BY DIVISION 26, SEE DETAIL 2/ET602
MON	LARGE CAPACITY JUNCTION BOX, INCLUDING FLANGET KIT AND COVER, MOUNTED IN WALL AT +6'-0" ABOVE FINISHED FLOOR	OFP	CHIEF PAC 525FCW, SEE DETAIL 1/ET602

MANUFACTURER'S NAMES AND TELEPHONE NUMBERS ARE LISTED IN THE SPECIFICATIONS
A/R = AS REQUIRED, OFP = OBTAIN FROM PLANS

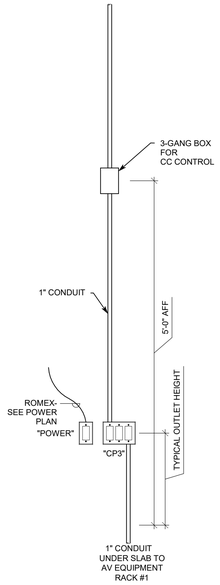

8 CULTURAL CENTER CC AND CP3 MOUNTING DETAIL
NO SCALE

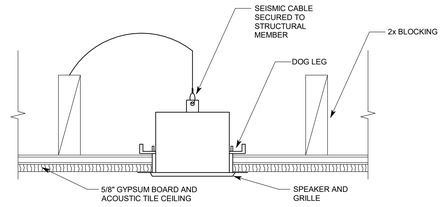

5 SPEAKER SEISMIC DETAIL
NO SCALE

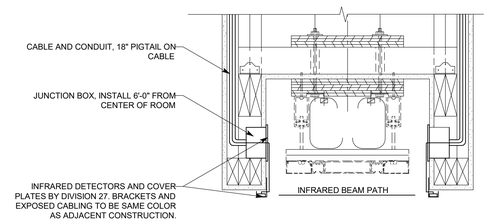

4 HEADER DETAIL (IN CULTURAL CENTER)
NO SCALE

IR

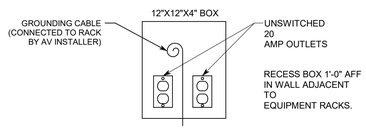

7 AV POWER JUNCTION BOX
NO SCALE

1

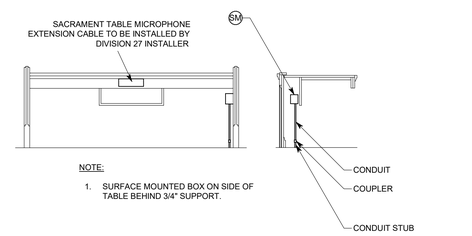

3 SACRAMENT TABLE MICROPHONE DETAIL
NO SCALE

SM

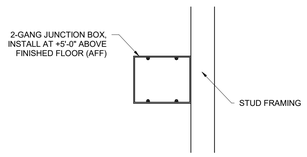

6 CULTURAL CENTER CONTROLS JUNCTION BOX DETAIL
NO SCALE

CC

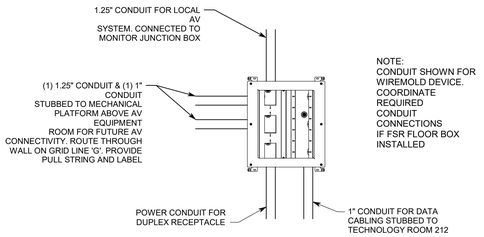

2 HIGH COUNCIL 128 FLOOR BOX DETAIL
NO SCALE

FB2

bhd ARCHITECTS
www.bhdarchitects.com
Phone 801.571.0010
Fax 801.571.0303
Toll Free 888.571.0010
45 East Wadsworth Park Drive
Suite 205 Draper, Utah 84020

LICENSED PROFESSIONAL ENGINEER
No. 5148728
DAVID G. HINCKLEY
8-19-24
STATE OF UTAH

SPECTRUM ENGINEERS
324 S. State St., Suite 400
Salt Lake City, UT 84111
800-678-7077
801-328-5151
fax: 801-328-5155
www.spectrum-engineers.com

THE CHURCH OF JESUS CHRIST OF LATTER-DAY SAINTS

Orem YSA 3rd Stake
10 Ward Stake Center

Approx 1700 West 575 South
Vineyard, Utah 84059

Owner #: 570-1876
Plan Series: 2024 10 Ward SC
County Parcel: 39-228-0001
BHD #: 2344
Date: 9 Jul 2024

Drawing Issue and Revision Schedule		
#	Date	Description
1	15 Aug 2024	Bid Documents

AV ROUGH-IN SCHEDULES, NOTES, DETAILS, AND DIAGRAM

ET601

Printed 8/14/2024 8:08:47 PM

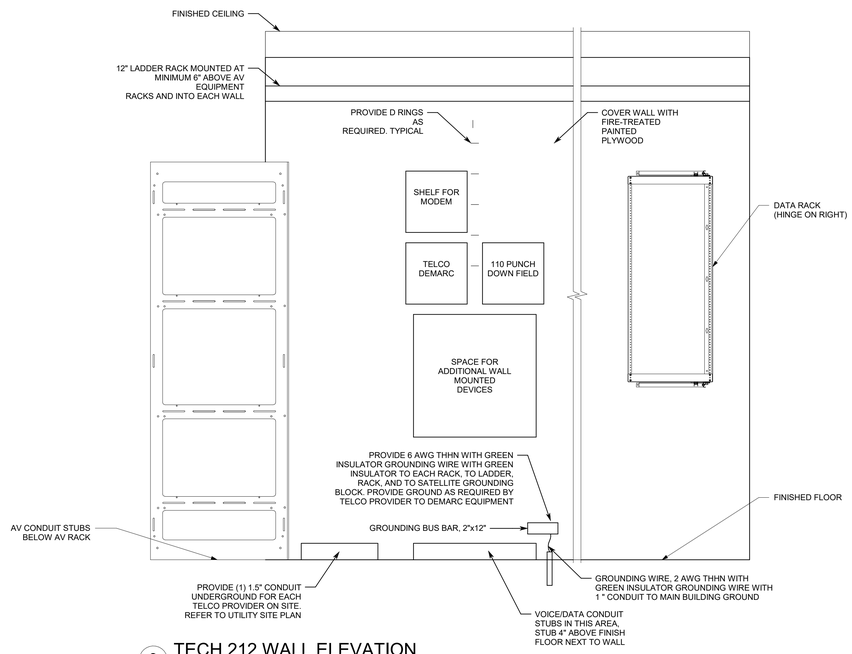

3 TECH 212 WALL ELEVATION
NO SCALE

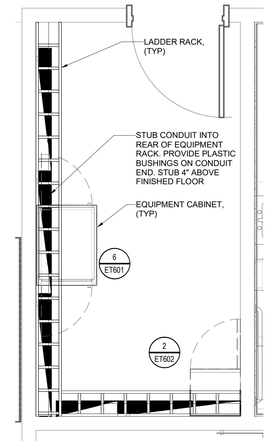

2 TECH ROOM 212 DETAIL
NO SCALE

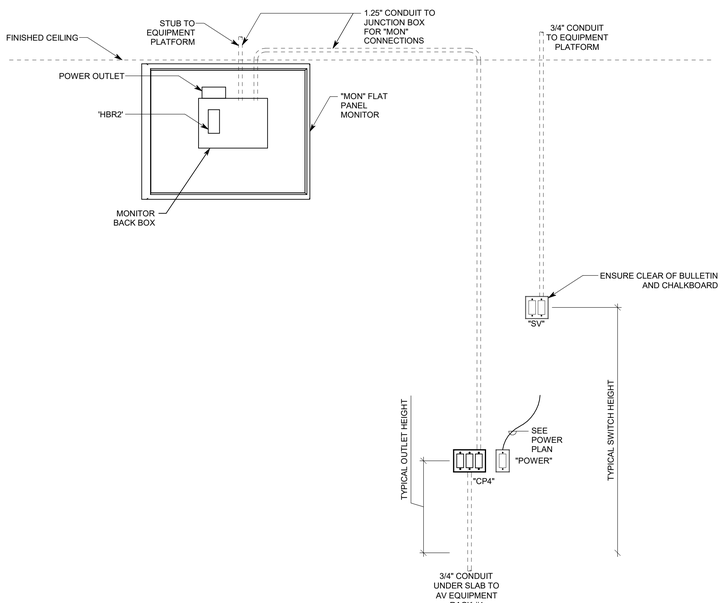

5 MULTI-PURPOSE ROOM - FRONT ELEVATION DETAIL
NO SCALE

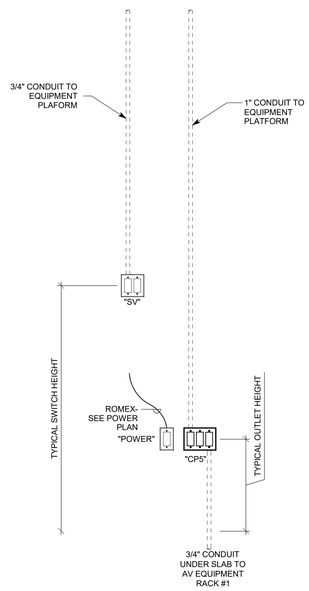

4 MULTI-PURPOSE ROOM - REAR WALL ELEVATION DETAIL
NO SCALE

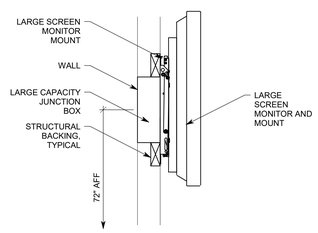

1 WALL MOUNTED FLAT PANEL DETAIL
NO SCALE

MON

bhd ARCHITECTS
www.bhdarchitects.com
Phone 801.571.0010
Fax 801.571.0303
Toll Free 888.571.0010
65 East Wadsworth Park Drive
Suite 205 Draper, Utah 84020

LICENSED PROFESSIONAL ENGINEER
No. 5148728
DAVID G. HINCKLEY
8-19-24
STATE OF UTAH

SPECTRUM ENGINEERS
324 S. State St., Suite 400
Salt Lake City, UT 84111
800-678-7077
801-328-5151
fax: 801-328-5155
www.spectrum-engineers.com

THE CHURCH OF JESUS CHRIST OF LATTER-DAY SAINTS

Orem YSA 3rd Stake
10 Ward Stake Center

Approx. 1700 West 575 South
Vineyard, Utah 84059

Date: 9 Jul 2024
BHD #: 2344
County Parcel: 37:228:0001
Plan Series: 2024 10 Ward SC
Owner #: 390-1876

Drawing Issue and Revision Schedule

#	Date	Description
1	15 Aug 2024	Bid Documents

AV ROUGH-IN DETAILS

ET602

Printed 8/14/2024 8:08:47 PM

KEYED NOTES

1
2
3 PROVIDE PROTECTIVE WIRE GUARD ON DEVICES NOTED.
4 PROVIDE CONNECTION FOR FIRE SPRINKLER SYSTEM EXTERNAL BELL/HORN STROBE. SEE H/FS501.
5 SEE L/FS501 FOR LOCATIONS OF DEVICES.
6 PROVIDE OUTPUT FROM FIRE ALARM PANEL TO CONTROL SHUNT TRIP BREAKER SERVING RANGE(S). IF SMOKE DETECTOR IN SERVING AREA GOES INTO ALARM, THE CIRCUIT BREAKER(S) SERVING THE RANGE(S) SHALL SHUNT TRIP.

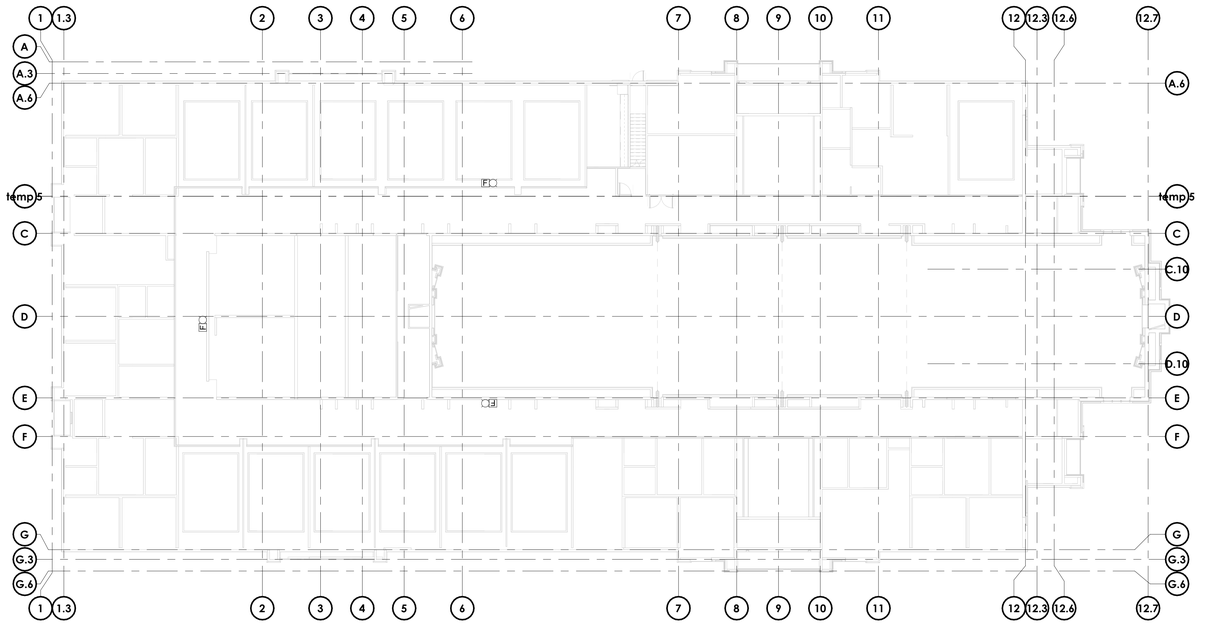

2 EQUIPMENT PLATFORM FIRE ALARM PLAN
1/16" = 1'-0"

0 8' 16' 32'

FIRE DETECTION SYMBOLS

FACP	FIRE ALARM CONTROL PANEL
F	MANUAL STATION
H	HEAT DETECTOR
S	SMOKE DETECTOR
S D	DUCT SMOKE DETECTOR (BY DIV 23). (COORDINATE CONNECTIONS WITH THE MECHANICAL CONTRACTOR)
F	SPEAKER/STROBE WITH 15cd STROBE (HIGHER OUTPUT STROBES AS NOTED ON DRAWINGS)
	AUDIBLE VOICE ALARM ANNUNCIATION: ALARM SIGNAL SHALL BE ANNUNCIATED BY AUDIBLE VOICE EVACUATION MESSAGE. MESSAGE SHALL BE DIGITALLY RECORDED WITH MESSAGE CONTENT MEETING REQUIREMENTS OF THE NFPA AND LOCAL AUTHORITY. MESSAGE SHALL BE FIELD PROGRAMMABLE AND RETAINED IN MEMORY IF POWER IS INTERRUPTED.
	SPEAKER ONLY
EOL	END OF LINE WIRING DEVICE
FS	WATER FLOW SWITCH
TS	VALVE TAMPER SWITCH
LT	LOW TEMPERATURE SENSOR
WP	DEVICE DESIGNED FOR OUTDOOR USE
PIV	POST INDICATOR VALVE (COORDINATE LOCATION WITH FIRE SPRINKLER CONTRACTOR)

FIRE ALARM RISER NOTES

1. WIRING FROM DIFFERENT ANNUNCIATION AND INITIATING DEVICES LOOPS MAY BE COMBINED IN A COMMON CONDUIT. FOLLOW NEC REQUIREMENTS FOR FILL.
2. COORDINATE FIRE ALARM DEVICES WITH LIGHTING FIXTURES, SPEAKERS, GRILLS, ETC.
3. DO NOT INSTALL SMOKE DETECTORS WITHIN 3' OF ANY MECHANICAL GRILL.
4. NON-POWER LIMITED AND POWER LIMITED WIRING SHALL BE SEPARATED IN FACP.
5. PERMANENTLY IDENTIFY LOCATION OF CIRCUIT BREAKER FEEDING FACP AND PROVIDE RED MARKING ON CIRCUIT BREAKER.
6. PROVIDE PROTECTIVE WIRE GUARD ON DEVICES NOTED.
7. SEE L/FS501 FOR LOCATIONS OF DEVICES.
8. PROVIDE CONNECTION FOR FIRE SPRINKLER SYSTEM EXTERNAL BELL/HORN STROBE. SEE L/FS501.
9. PROVIDE FLUSH MOUNT STI LEXAN COVER.
10. ALL STROBES SHALL BE SYNCHRONIZED PER ALL ADA REQUIREMENTS.
11. FURNACES AS SHOWN ON DRAWINGS SHALL SHUTDOWN UPON GENERAL ALARM. PROVIDE ALL REQUIRED CONNECTIONS NECESSARY FOR SHUTDOWN. COORDINATE ALL WORK AND CONTROL CONNECTIONS WITH THE MECHANICAL CONTRACTOR.
12. INTELLIGIBLY CALCULATIONS FOR THIS PLAN ARE BASED ON SYSTEM SENSOR #SPV SPEAKERS. SUCCESSFUL FIRE ALARM SYSTEM SUPPLIER SHALL SHOW ON INSTALLATION DRAWING COMPLIANCE CALCULATIONS PER ALL NFPA REQUIREMENTS.
13. TO A/V SYSTEM. A/V SYSTEM SHALL MUTE UPON ALARM. COORDINATE ALL WORK AND REQUIREMENTS WITH THE A/V SYSTEM INSTALLER.
14. ALL FIRE ALARM CABLE THAT IS SUBJECT TO DAMAGE SHALL BE INSTALLED IN CONDUIT (ATTIC, EQUIPMENT PLATFORM, ABOVE SUSPENDED CEILINGS, ETC).
15. WHERE FIRE ALARM IS NOT RUN IN CONDUIT (SEE NOTE #14), CABLING SHALL BE RUN PERPENDICULAR AND PARALLEL TO SURFACES OF STRUCTURAL MEMBERS, AND FOLLOW SURFACE CONTOURS WHERE POSSIBLE.
16. DO NOT CONNECT, MOUNT OR SUPPORT ANY FIRE ALARM CABLING FROM DATA/COMM MOUNTING OR WIRE MANAGEMENT.

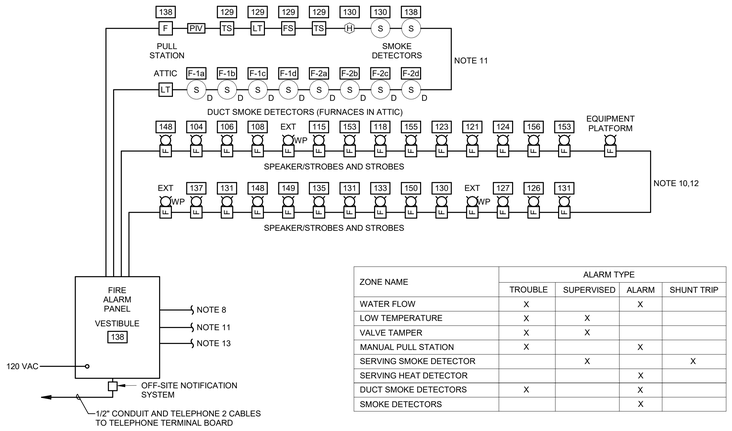

ZONE NAME	ALARM TYPE			
	TROUBLE	SUPERVISED	ALARM	SHUNT TRIP
WATER FLOW	X		X	
LOW TEMPERATURE	X	X		
VALVE TAMPER	X	X		
MANUAL PULL STATION	X		X	
SERVING SMOKE DETECTOR		X		X
SERVING HEAT DETECTOR			X	
DUCT SMOKE DETECTORS	X		X	
SMOKE DETECTORS			X	

3 FA RISER DIAGRAM
NOT TO SCALE

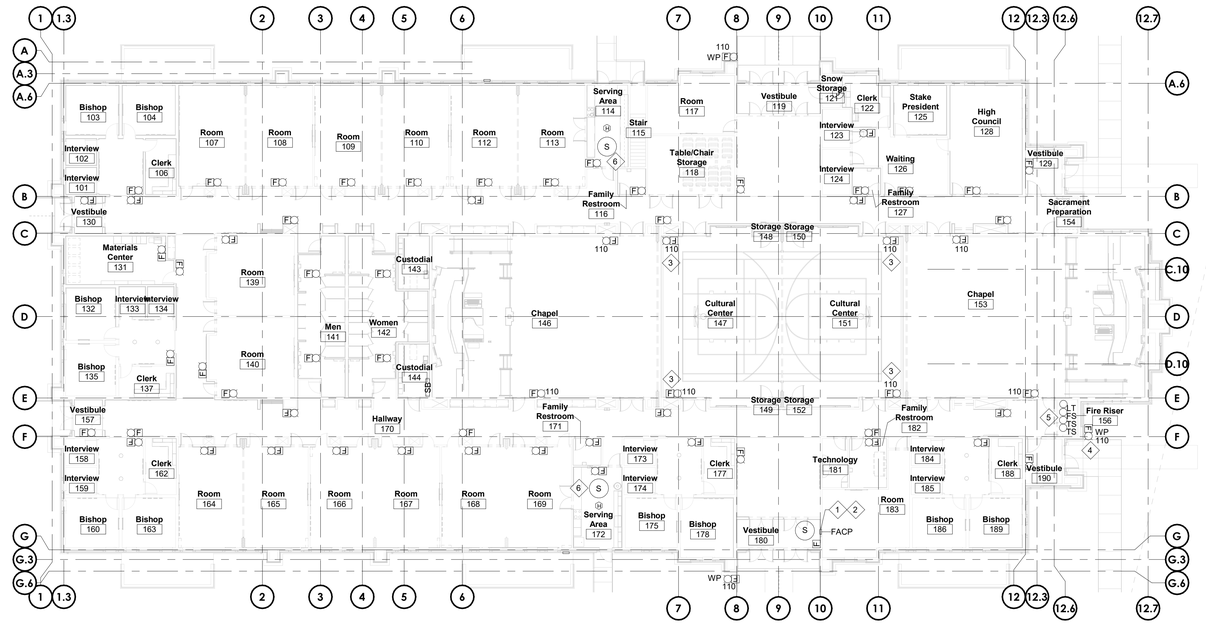

1 MAIN FLOOR FIRE ALARM PLAN
1/16" = 1'-0"

0 8' 16' 32'

bhd ARCHITECTS
www.bhdarchitects.com
Phone 801.571.0010
Fax 801.571.0303
Toll Free 888.571.0010
45 East Wadsworth Park Drive
Suite 205 Draper, Utah 84020

LICENSED PROFESSIONAL ENGINEER
No. 5148728
DAVID G. HINCKLEY
8-19-24
STATE OF UTAH

SPECTRUM ENGINEERS
324 S. State St., Suite 400
Salt Lake City, UT 84111
801-328-5151
fax: 801-328-5155
www.spectrum-engineers.com

THE CHURCH OF JESUS CHRIST OF LATTER-DAY SAINTS

Orem YSA 3rd 10 Ward Building
Orem UT YSA 3rd Stake

Approx. 1700 West 575 South
Vineyard, Utah 84059

Owner #:
Plan Series:
Project Manager:
County Parcel:
Project #:
BIM #:
Date: August, 2024

Drawing Issue and Revision Schedule

#	Date	Description

Fire Alarm Plans

FA101

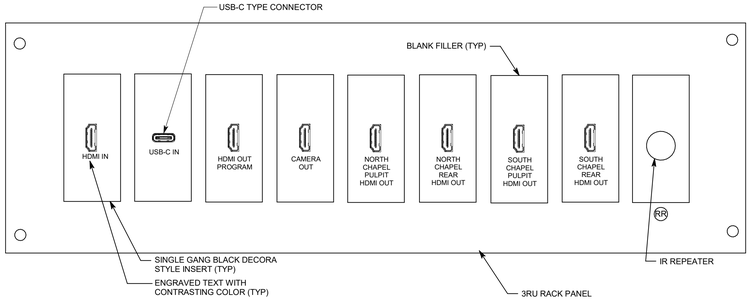

7 CONNECTION PANEL #11

NO SCALE

CP11

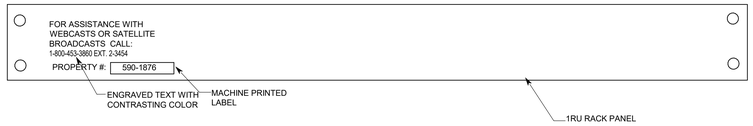

3 HELP DESK PANEL

NO SCALE

HDP

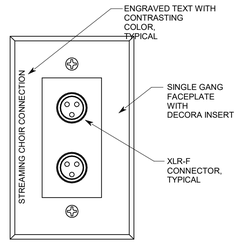

CHOIR MIC CONNECTION PANEL DETAIL 'CM'

9

NO SCALE

CM

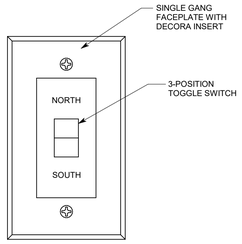

6 SPEAKER SOURCE SWITCH

NO SCALE

L

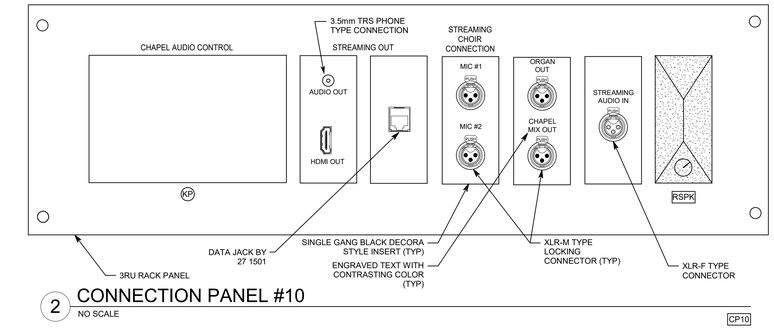

2 CONNECTION PANEL #10

NO SCALE

CP10

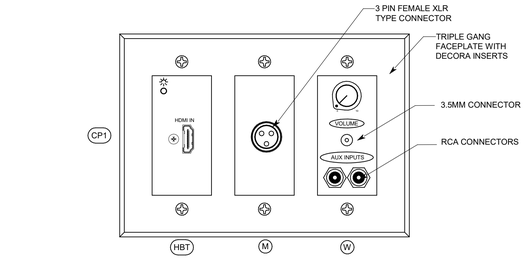

8 NORTH CHAPEL PULPIT CONNECTION DETAILS

NO SCALE

CP1 CP2

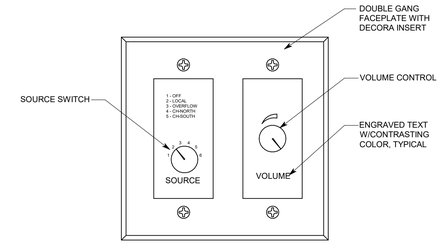

5 SOURCE & VOLUME CONTROL DETAIL

NO SCALE

SV

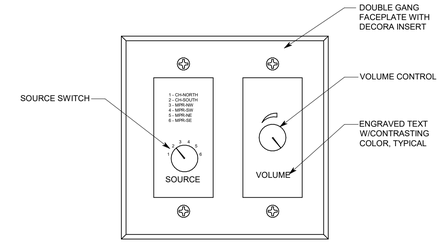

4 MOTHERS ROOM CONTROLLER

NO SCALE

SVM

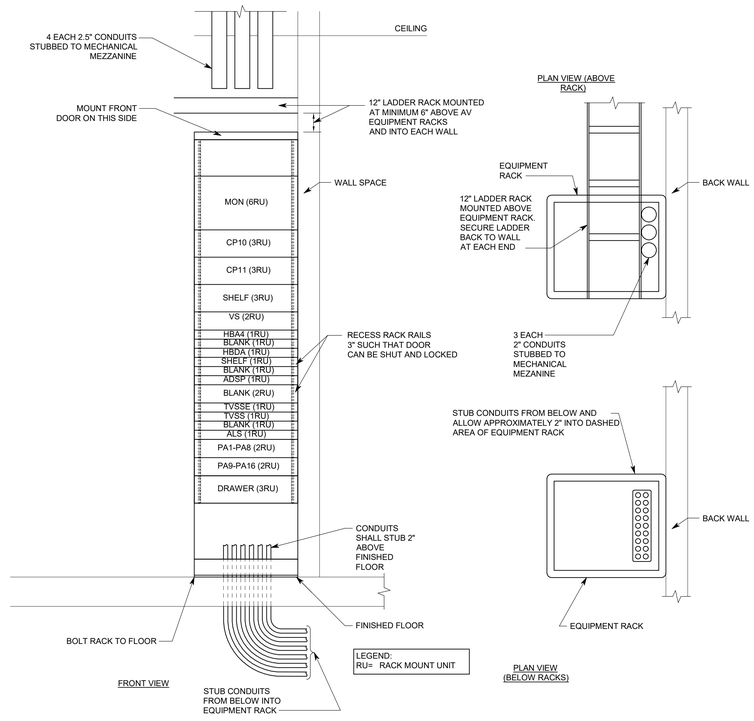

1 EQUIPMENT RACK ELEVATION AND DETAILS

NO SCALE

bhd ARCHITECTS
www.bhdarchitects.com
Phone 801.571.0010
Fax 801.571.0303
Toll Free 888.571.0010
65 East Wadsworth Park Drive
Suite 205 Draper, Utah 84020

LICENSED PROFESSIONAL ENGINEER
No. 5148728
DAVID G. HINCKLEY
8-19-24
STATE OF UTAH

SPECTRUM ENGINEERS
324 S. State St., Suite 400
Salt Lake City, UT 84111
800-678-7077
801-328-5151
fax: 801-328-5155
www.spectrum-engineers.com

THE CHURCH OF JESUS CHRIST OF LATTER-DAY SAINTS

Orem YSA 3rd Stake
10 Ward Stake Center

Approx. 1700 West 575 South
Vineyard, Utah 84059

Plan Series: 2024 10 Ward SC
County Parcel: 37:226:0001
BHD #: 2344
Date: 7 Jul 2024
Owner #: 590-1876

Drawing Issue and Revision Schedule

#	Date	Description
1	15 Aug 2024	Bid Documents

AV SYSTEMS DETAILS

TA501

Printed 8/14/2024 8:08:49 PM

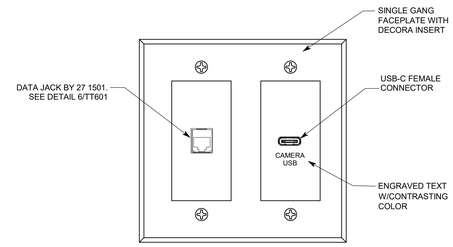

7 CONNECTION PANEL #7

NO SCALE

CP7

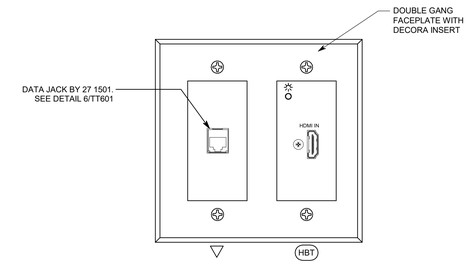

4 CONNECTION PANEL #6

NO SCALE

CP6

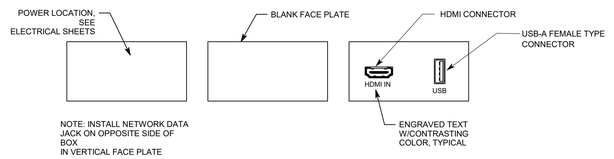

6 CONNECTION PANEL 'FB2'

NO SCALE

FB2

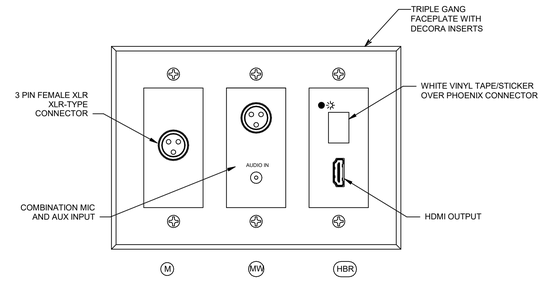

3 CONNECTION PANEL #5

NO SCALE

CP5

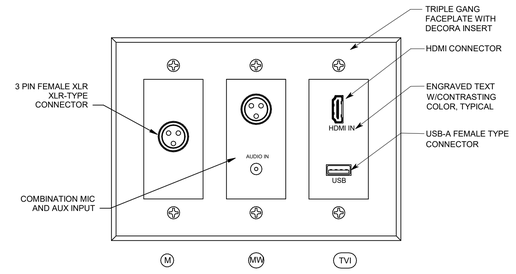

2 CONNECTION PANEL #4

NO SCALE

CP4

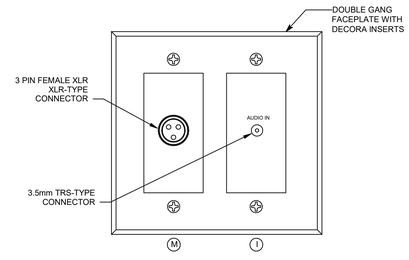

1 CONNECTION PANEL #3

NO SCALE

CP3

bhd ARCHITECTS
www.bhdarchitects.com
Phone 801.571.0010
Fax 801.571.0303
Toll Free 888.571.0010
65 East Wadsworth Park Drive
Suite 205 Draper, Utah 84020

LICENSED PROFESSIONAL ENGINEER
No. 5148728
DAVID G. HINCKLEY
8-19-24
STATE OF UTAH

SPECTRUM ENGINEERS
324 S. State St., Suite 400
Salt Lake City, UT 84111
800-678-7077
801-328-5151
fax: 801-328-5155
www.spectrum-engineers.com

THE CHURCH OF
JESUS CHRIST
OF LATTER-DAY SAINTS

Orem YSA 3rd Stake
10 Ward Stake Center

Approx. 1700 West 575 South
Vineyard, Utah 84059

Plan Series: 2024 10 Ward SC
Owner #: 376-1876
County Parcel: 37:228:0001
BHD #: 2344
Date: 7 Jul 2024

Drawing Issue and Revision Schedule

#	Date	Description
1	15 Aug 2024	Bid Documents

AV SYSTEMS DETAILS

TA502

Printed 8/14/2024 8:08:50 PM

AUDIO-VIDEO SYSTEM EQUIPMENT LIST

SYM	DESCRIPTION	QTY	ACCEPTABLE TYPES
	12" LADDER RACK W/ WALL AND RACK ATTACHMENTS	A/R	CHATSWORTH 10250-712 MIDDLE ATLANTIC CLB-6
HDA	HDMI DISTRIBUTION AMPLIFIER, 2 PORT SHELF	OFP	EXTRON DA2 HD 4K EXTRON RSB 123
HBDA	HDBASET DISTRIBUTION AMPLIFIER, 4 PORT	OFP	EXTRON DTP HD DA4 4K 330
HBR	HD BASE T WALL RECEIVER	OFP	EXTRON DTP R HWP 4K 331 D
HBR2	HD BASE T RECEIVER, RACK MOUNT	OFP	EXTRON DTP2 R 211
CP1	HDMI HD BASE T WALL TRANSMITTER	OFP	EXTRON DTP2 T 201D
	MICROPHONE INPUT MODULE	OFP	EMTECH MSC-M RCI LDS002-MF-X (X=COLOR)
	SOUND SYSTEM LINE LEVEL INPUT	OFP	EMTECH MSC-W3 RU RCI LDS002-RCI-M-B
CP2	HDMI HD BASE T WALL RECEIVER	OFP	EXTRON DTP R HWP 4K 331 D
	SOUND SYSTEM OUT	OFP	EMTECH MSC-U3 RU
VS	HDMI MATRIX SWITCHER 10X8	OFP	EXTRON DTP CROSS POINT 108 4K
S2H	SDI TO HDMI CONVERTER	OFP	DECIMATOR 12G-CROSS
CP	CHAPEL CONTROL PEDESTAL PLATE	OFP	QSC TSC-50-G3 W/ 3-GANG 1/16" METAL BLACK ANODIZED MOUNTING PLATE SEE ARCHITECTURAL MILLWORK DETAILS
CC	CULTURAL CENTER & SOUTH CHAPEL REMOTE CONTROL	OFP	QSC TSC-50W-G3
NS	LDS STANDARD NETWORK SWITCH	OFCI	OWNER FURNISHED-INSTALLED BY DIV 271501, SEE DETAIL TT601
FW	LDS STANDARD FIREWALL	OFCI	OWNER FURNISHED-INSTALLED BY DIV 271501, SEE DETAIL TT601
SV	SOURCE & VOLUME CONTROL 6-INPUT, 70V	OFP	LOWELL CS650-DW LABEL ACCORDING TO DETAIL 5/TA501
SVM	SOURCE & VOLUME CONTROL 6-INPUT, 70V, MOTHER'S ROOM	OFP	LOWELL CS650-DW LABEL ACCORDING TO DETAIL 4/TA501
▽(X) ▽ WAP	DATA OUTLET- FURNISHED AND INSTALLED BY STRUCTURED CABLING CONTRACTOR (X) = NUMBER OF DATA CONNECTIONS	OFP	SEE TT601
▽	VOICE OUTLET- FURNISHED AND INSTALLED BY STRUCTURED CABLING CONTRACTOR	OFP	SEE TT601
DPP	DATA PATCH PANEL - FURNISHED AND INSTALLED BY STRUCTURED CABLING CONTRACTOR	OFP	SEE TT601
MON	FLAT SCREEN TV, 19", FRONT PANEL CONTROLS ACCESSIBLE FROM FRONT WITH RACK MOUNT SHELF OR PANEL APPROPRIATE VESA MOUNT	OFP	TOTEVISION LED 1562 HDR OR APPROVED EQUIVALENT
S4	4" LOUDSPEAKER LOUDSPEAKER GRILLE LOUDSPEAKER ENCLOSURE	OFP	COMMUNITY D4 W/D4NCB JBL CONTROL 14C/T W/ MTC-24NC LOWELL ES-42T W/ ES-4-RIB
SM	4" LOUDSPEAKER	OFP	ATLAS SOUND FC104T72 LOWELL JR410-T470 ELECTRO-VOICE 205-4T
	LOUDSPEAKER GRILLE	OFP	ATLAS SOUND T720-4BT LOWELL CN-4M
	LOUDSPEAKER ENCLOSURE	OFP	ATLAS SOUND E410
S6	6" LOUDSPEAKER LOUDSPEAKER GRILLE LOUDSPEAKER ENCLOSURE	OFP	COMMUNITY D6 W/D6NCB JBL CONTROL 16C/T W/ MTC-26NC LOWELL ES-62T W/ ES-6-RIB
MON	FLAT SCREEN TV, 65"	OFCI	OWNER FURNISHED, CONTRACTOR INSTALLED
	FLAT PANEL WALL MOUNT	OFCI	PEERLESS AV HPF650, OWNER FURNISHED, CONTRACTOR INSTALLED
HBR2	HD BASE T RECEIVER, FURNITURE MOUNT	OFP	EXTRON DTP2 R 211
QIF	QSC INTERFACE	OFP	EMTECH QIF ORMADA CHIF-C110F (0010-998-1000)

SYM	DESCRIPTION	QTY	ACCEPTABLE TYPES
	HIGH IMPACT NYLON COVER PLATES FOR ALL DECORA STYLE AV MODULES, NUMBER OF GANGS AS REQUIRED. COLORS TO MATCH NEARBY ELECTRICAL DEVICES	OFP	HUBBELL OR LEVITON
M SM	MICROPHONE INPUT MODULE	OFP	EMTECH MSC-M, (FOR 'SM' SEE DETAILS 3/ET601 AND ARCHITECTURAL MILLWORK DETAILS)
MW	MIC/LINE INPUT	OFP	EMTECH MSC-MW3 OR RCI LDS002-W-X (X=COLOR)
CM	MICROPHONE INPUT, DUAL, W/ CUSTOM LABEL	OFP	EMTECH MSC-D, SEE DETAIL 9/TA501
A	ORGAN INPUT, CABLE MOUNTED MICROPHONE CONNECTOR	OFP	SWITCHCRAFT A3FB NEUTRIK NC3FX-BAG
	50'-0" MICROPHONE EXTENSION CABLES W/ BLACK CONNECTORS	2	CONQUEST B84-50 WHIRLWIND MK450
	25'-0" MICROPHONE EXTENSION CABLES W/ BLACK CONNECTORS	4	CONQUEST B84-25 WHIRLWIND MK425
	MICROPHONE, GENERAL USE	4	AUDIO-TECHNICA ATM610AS AKG D5-S
	MICROPHONE, CHAPEL PULPIT	2	AUDIO-TECHNICA ES905CLA
	MICROPHONE, SACRAMENT TABLE	2	IVIE IM-10 EMTECH BLU-SM
	MICROPHONE,GOOSENECK. INSTALL ON MPR PULPITS WITH METAL PLATE-MOUNTED FEMALE XLR WIRED TO MALE XLR INSIDE PULPIT IN WIREMOLD BOX.	2	AUDIO TECHNICA U855QL W/ CABLE, JUNCTION BOX, AND RCILDS0002-RCI-PMJ
	10'-0" MICROPHONE EXTENSION CABLE W/ BLACK CONNECTORS	2	CONQUEST B84-10 WHIRLWIND MK410
	15'-0" MICROPHONE EXTENSION CABLE W/ BLACK RIGHT ANGLE MALE CONNECTOR FOR PRIMARY ROOM MICROPHONE	2	CONQUEST B84-15 WHIRLWIND MK415
	8'-0" PEDESTRIAN STRIP	2	TECHFLEX DRN 3.00BK
	MICROPHONE STAND, FLOOR TYPE	2	ATLAS SOUND MS-20E W/PB21 XEB KONIG AND MEYER 210/9
ALS	ASSISTED LISTENING SYSTEM	2	LISTEN MH-01-01 PROGRAM ALL RECEIVERS TO WORK WITH BOTH TRANSMITTERS
		A/R	RG-58 50Ω COAX CABLE
V	VOLUME CONTROL MODULE	OFP	EMTECH MSC-V10 OR V35 AS APPROPRIATE FOR SPEAKER LOAD
L	SOURCE SWITCH, 3-POSITION ROCKER	OFP	EMTECH MSC-S WITH CUSTOM LABEL, SEE DETAIL 4/TA501
IR	INFRARED DETECTORS COVER CABLE W/ LIGHT COLORED TUBING	OFP	EMTECH BLU-IR
RR IR HUB	INFRARED RECEIVER W/ HUB, POWER SUPPLY, AND FLASHER	A/R	ATLAS M-1AJW, M-1CB4B, F-1, OR EQUAL
PTZ	CAMERA, PTZ, IP STREAMING & CONTROL, CMOS, SDI, WHITE W/ MOUNT	OFP	CLEAR TOUCH PL500 W/ CTS-WMNTB-RL45
	INSTALLED HDMI INTERCONNECT CABLE, 3'	A/R	HDMI HIGH SPEED
	INSTALLED HDMI INTERCONNECT CABLE, 6'	A/R	
	HDMI CABLE, 15 FEET, FOR OWNER	4	
	HDMI CABLE, 50 FEET, FOR OWNER	2	
1	AV EQUIPMENT CABINET, FLOOR STANDING W/ BACK DOOR, SIDE PANEL AND REAR RACK RAILS	OFP	MIDDLE ATLANTIC MRK-4426, WITH SPN-44-267, MW-LA, MW-LVRD-44 ATLAS 744-25, WITH SPS44-25, FRD-44
	DRAWER	1	MIDDLE ATLANTIC UD3 ATLAS SOUND SD3-14
	SHELF	1	MIDDLE ATLANTIC SS LOWELL RSD-116
2	DATA RACK, SWING FRAME	OFP	SEE DETAIL 7/TT601
ADSP	AUDIO MIXER, DIGITAL SIGNAL PROCESSOR W/ POWER SUPPLY, I/O MODULES, RELAYS, AND ACCESSORIES AS REQUIRED. WITH MANUFACTURER'S DRAWING SHOWING DETAILED WIRING CONNECTIONS FOR THIS DESIGN.	A/R	QSC CORE 110F V2 W/ REFLECT LICENSE 2 YEAR PREPAID FOR CORE AND ALL PERIPHERALS AND SCRIPTING LICENSE
GPIO	GPIO EXPANDER	OFP	QSC QIO-GP8X8
I/O EXP	QSC I/O EXPANDER, 4X MIC/LINE INPUTS	OFP	QSC QIO ML4i
PA	AMPLIFIER, 8 CHANNEL W/ 8 LINE INPUTS PA1-PA8, PA9-PA16	OFP	QSC CX-Q 4K8 OR QSC DPA-4K8Q EITHER IS APPROVED, BASED ON AVAILABILITY

SYM	DESCRIPTION	QTY	ACCEPTABLE TYPES
HDP	HELP DESK PANEL, 1 RU	1	CUSTOM LABELING, SEE DETAIL 3/TA501
TS	STANDARD TERMINAL STRIP	A/R	
IT	ISOLATION TRANSFORMER	A/R	RDL TX-1A PRO CO LOT-1
TVSSE	SURGE SUPPRESSOR AND SWITCHER IP ENABLED W/ UL LISTED PLUG STRIP (IN ADDITION, PROVIDE TVSS FOR TT SHEETS)	OFP	MIDDLE ATLANTIC RLINK P920R-SP/ RLINK-CONT/RLINK-TEMP
	POWER STRIP, UL LISTED	A/R	6 OUTLET POWER STRIP OR EQUAL
TVSS	NON SEQUENCING SURGE SUPPERESSOR	OFP	MIDDLE ATLANTIC PD915R-SP
CP10	CONNECTION PANEL #10	1	LOWELL D9P-ID-3 OR AS APPROVED CUSTOM XLR INPUT CUSTOM DUAL XLR OUTPUTS CUSTOM HDMI AND 3.5mm TRS CONNECTION *CUSTOM DEVICES MUST BE CUSTOM NETWORK JACK FABRICATED ON METAL DECORA INSERTS AS SHOWN ON 2/TA501
KP	CHAPEL MEDIA SELECTOR TOUCH SCREEN	OFP	QSC TSC-50-M3
RSPK	RACK MONITOR SPEAKER, DECORA	1	RDL D-PSP1 / PS-24AS
STR	HDMI TO USB CONVERTER	OFP	RAZER RIPSAW HD
CP11	CONNECTION PANEL #11	OFP	LOWELL D9P-ID-3 OR AS APPROVED CUSTOM HDMI INPUT CUSTOM HDMI OUTPUTS CUSTOM USB-C INPUT CUSTOM IR REPEATER *CUSTOM DEVICES MUST BE FABRICATED ON METAL DECORA INSERTS AS SHOWN ON 7/TA501
CP3	CONNECTION PANEL #3	OFP	EMTECH MSC-M OR RCI LDS002-MF-X (X=COLOR) EMTECH MSC-I OR RCI M9105 EXTRON DTP R HWP 4K 331 D TRIPLE GANG DECORA SURROUND SEE DETAIL 1/TA502
CP4	CONNECTION PANEL #4	OFP	EMTECH MSC-M OR RCI LDS002-MF-X (X=COLOR) EMTECH MSC-MW3 OR RCI LDS002-W-X (X=COLOR) EMTECH MSV-TVI OR RCI MI 9511 TRIPLE GANG DECORA SURROUND HDMI HIGHSPEED CABLE USB 3.0 CABLE SEE DETAIL 2/TA502
CP5	CONNECTION PANEL #5	OFP	EMTECH MSC-M OR RCI LDS002-MF-X (X=COLOR) EMTECH MSC-MW3 OR RCI LDS002-W-X (X=COLOR) EXTRON DTP R HWP 4K 331 D TRIPLE GANG DECORA SURROUND SEE DETAIL 3/TA502
CP6	CONNECTION PANEL #6	OFP	EXTRON DTP2 T 201D CUSTOM NETWORK JACK
CP7	CONNECTION PANEL #7	OFP	CUSTOM NETWORK JACK CUSTOM USB-C CONNECTION SEE DETAIL 7/TA502
FB2	CONNECTION PANEL "FB2"	1	EMTECH MSV-TVI RCI MI9511 OR CUSTOM PLATE THAT INTERFACES WITH INSTALLED FLOOR BOX HDMI HIGHSPEED CABLE USB 2.0 CABLE

MANUFACTURER'S NAMES AND TELEPHONE NUMBERS ARE LISTED IN THE SPECIFICATIONS
A/R = AS REQUIRED, OFP = OBTAIN FROM PLANS, OFCI = OWNER FURNISHED CONTRACTOR INSTALLED EQUIPMENT

GENERAL PROJECT NOTES

1. NO CHANGES SHALL BE MADE WITHOUT THE PROJECT ACOUSTICAL AND TECHNOLOGY CONSULTANT'S WRITTEN CONSENT.
2. REFER TO DRAWINGS FOR EXACT NUMBER OF COMPONENTS USED IF NOT SPECIFIED IN EQUIPMENT LIST.
3. SEE 'ET' SHEETS FOR DEVICE LOCATIONS AND COORDINATION.
4. SEE 'TT' SHEET FOR ADDITIONAL COORDINATION.
5. SECURE ALL LOUDSPEAKER ASSEMBLIES WITH SEISMIC RESTRAINTS. MOUNT ALL LOUDSPEAKER ASSEMBLIES IN SUSPENDED TILE CEILINGS ON TILE BRIDGES EVEN IF NOT SHOWN IN EQUIPMENT LIST.
6. MOUNT ALS ANTENNA VERTICALLY ON EQUIPMENT PLATFORM IN LOCATION CHOSEN TO PROVIDE MAXIMUM COVERAGE OF CHAPEL AND CULTURAL CENTER.

GENERAL SHEET NOTES

1. CONNECT CHAPEL AND ROSTRUM SPEAKERS TOGETHER AT TERMINAL STRIP IN RACK. DISCONNECT CHAPEL SPEAKERS FOR FOLDING PARTITION TESTING.
2. UNLESS OTHERWISE NOTED, MODULES SHALL BE PURCHASED FROM MANUFACTURER LISTED, NOT CUSTOM MADE. COLOR OF INSERTS AND COVER PLATES TO MATCH ELECTRICAL DEVICES.
3. 'TVSSE' DEVICES CAN PROVIDE EMAIL NOTIFICATION WHEN POWER AND TEMPERATURE THRESHOLDS ARE EXCEEDED. SET EMAIL NOTIFICATIONS TO BE SENT TO FM PROVIDED EMAILS ADDRESS WHEN MANUFACTURE RECOMMENDED POWER AND TEMPERATURE LIMITS ARE EXCEEDED.
4. FURNISH SPEAKER ENCLOSURES AND TRIM RINGS TO DIVISION 26 INSTALLER FOR INSTALLATION.
5. REFER TO A SHEETS FOR COORDINATION OF ITEMS MOUNTED IN WOOD MILLWORK.

bhd ARCHITECTS
www.bhdarchitects.com
Phone 801.571.0010
Fax 801.571.0303
Toll Free 888.571.0010
65 East Wadsworth Park Drive
Suite 205 Draper, Utah 84020

LICENSED PROFESSIONAL ENGINEER
No. 5148728
DAVID G. HINCKLEY
8-19-24
STATE OF UTAH

SPECTRUM ENGINEERS
324 S. State St., Suite 400
Salt Lake City, UT 84111
800-678-7077
801-328-5151
fax: 801-328-5155
www.spectrum-engineers.com

THE CHURCH OF JESUS CHRIST OF LATTER-DAY SAINTS

Orem YSA 3rd Stake
10 Ward Stake Center

Approx. 1700 West 575 South
Vineyard, Utah 84059

Owner #: SPG-1874
Plan Series: 2024 10 Wards SC
County Parcel: 37-228-0001
BHD #: 2344
Date: 7 Jul 2024

Drawing Issue and Revision Schedule

#	Title	Date
1	Bid Documents	15 Aug 2024

AV SYSTEMS SCHEDULES AND NOTES

TA601

Printed: 8/14/2024 8:58:51 PM

GENERAL SHEET NOTES

1. WHERE MULTIPLE DEVICES ARE SHOWN ON A SINGLE 'TVSSE' OUTLET, PROVIDE PLUG STRIPS AS REQUIRED.
2. QSC 'CP' AND 'CC' CONTROLLERS MUST BE CONNECTED TO POE PORTS.
3. HDBASE T AND QSC DEVICES ARE IP COMMUNICATIONS PROTOCOL DEVICES. TWISTED PAIR CABLES MUST MEET STANDARDS DEFINED IN THE HORIZONTAL COMMUNICATIONS SPECIFICATIONS.
4. N/C INDICATES NO CONNECTION.
5. ADSP AND CONTROL/LOGIC WIRING IS GENERIC. SEE MANUFACTURER'S INSTRUCTION SHEET FOR WIRING DETAILS.
6. USE DHCP FOR IP ADDRESS ASSIGNMENT.
7. CONFIGURE NETWORK SWITCH FOR PROPER NETWORK ZONES. NETWORK PORTS CONNECTED TO CONVENIENCE OUTLETS AND QSC DEVICE B PORTS SHALL BE CONFIGURED FOR PUBLIC ACCESS. ALL OTHER AV AND FACILITIES DEVICES SHALL BE CONNECTED TO PORTS CONFIGURED FOR FACILITIES ZONE ACCESS.
8. CONFIGURE 'VS' LOOPOUT TO MIRROR INPUT 7.

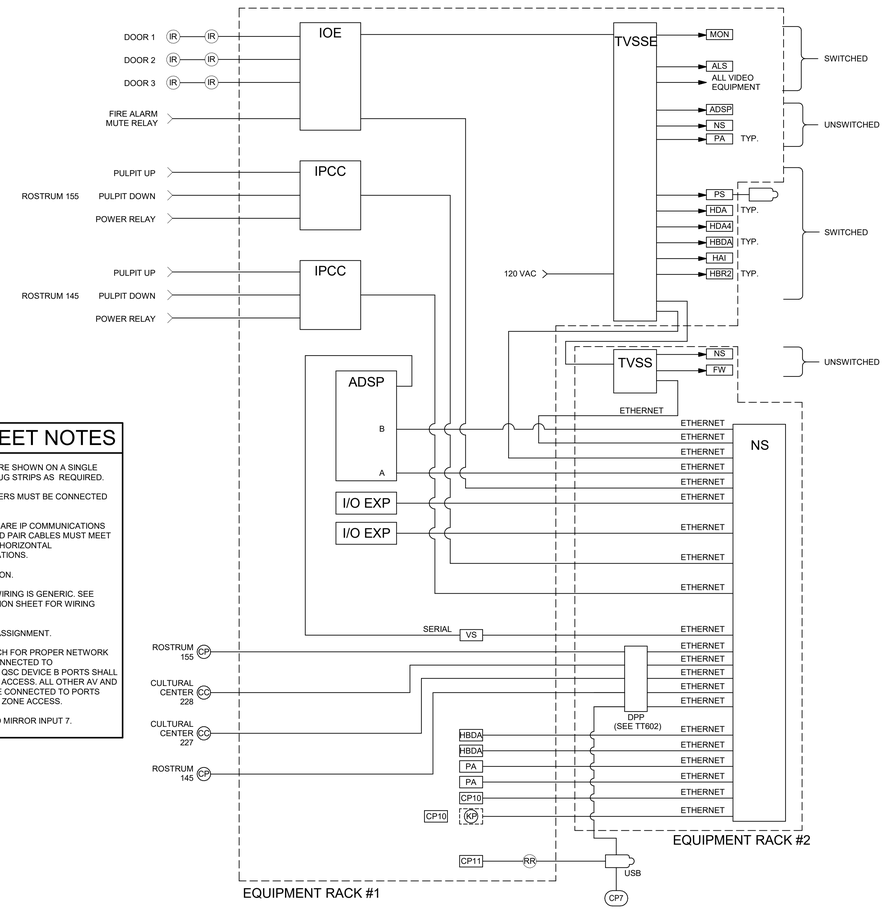

2 CONTROL/LOGIC RISER DIAGRAM

NO SCALE

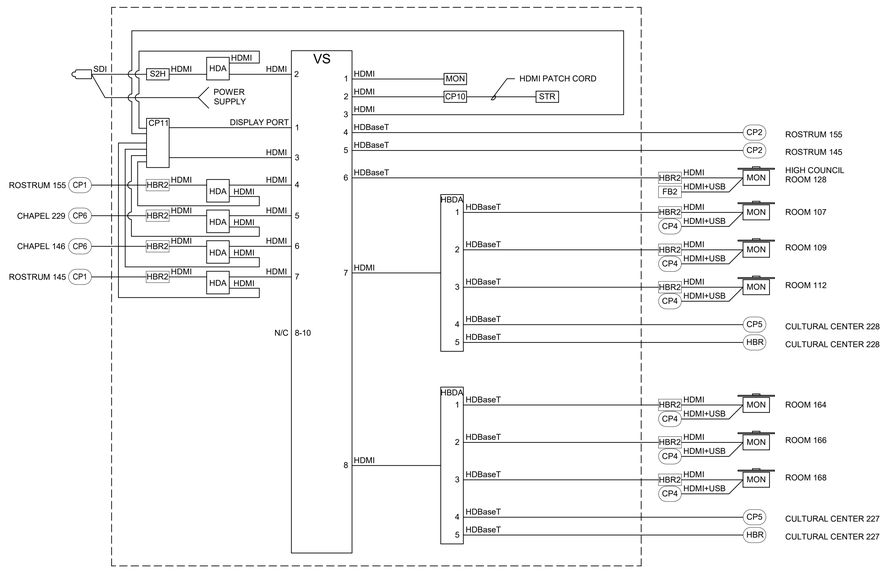

1 VIDEO SYSTEM RISER DIAGRAM

NO SCALE

bhd ARCHITECTS
www.bhdarchitects.com
Phone 801.571.0010
Fax 801.571.0303
Toll Free 888.571.0010
65 East Wadsworth Park Drive
Suite 205 Draper, Utah 84020

LICENSED PROFESSIONAL ENGINEER
No. 5148728
DAVID G. HINCKLEY
8-19-24
STATE OF UTAH

SPECTRUM ENGINEERS
324 S. State St., Suite 400
Salt Lake City, UT 84111
800-678-7077
801-328-5151
fax: 801-328-5155
www.spectrum-engineers.com

THE CHURCH OF JESUS CHRIST OF LATTER-DAY SAINTS

Orem YSA 3rd Stake
10 Ward Stake Center

Approx. 1700 West 575 South
Vineyard, Utah 84059

Owner #: 590-1876
Plan Series: 2024 10 Ward LSC
County Parcel: 59:226:0001
BHD #: 2344
Date: 9 Jul 2024

Drawing Issue and Revision Schedule		
#	Date	Description
1	15 Aug 2024	Bid Documents

AV SYSTEMS DIAGRAMS

TA602

Printed 8/14/2024 8:08:51 PM

bhd ARCHITECTS
www.bhdarchitects.com
Phone 801.571.0010
Fax 801.571.0303
Email Mail@bhdarchitects.com
45 East Wadsworth Park Drive
Suite 205 Draper, Utah 84020

PROFESSIONAL ENGINEER
No. 5148728
DAVID G. HINCKLEY
8-19-24
STATE OF UTAH

SPECTRUM
ENGINEERS
324 E. 3300 S., Suite 200
Salt Lake City, UT 84111
800-878-7077
801-328-5155
fax: 801-328-5155
www.spectrum-engineers.com

THE CHURCH OF
JESUS CHRIST
OF LATTER-DAY SAINTS

Orem YSA 3rd Stake
10 Ward Stake Center

Approx. 1700 West 575 South
Vineyard, Utah 84059

Date: 9 Jul 2024
BHD #: 2344
County Parcel: 39:228:0001
Plan Series: 2024 10 Ward SC
Owner #: 590-1876

Drawing Issue and Revision Schedule		
#	Date	Description
1	15 Aug 2024	Bid Documents

AV SYSTEMS DIAGRAMS

TA603

GENERAL SHEET NOTES

1. N/C INDICATES NO CONNECTION.
2. ADSP & CONTROLLOGIC WIRING IS GENERIC. SEE MANUFACTURER'S INSTRUCTION SHEET FOR WIRING DETAILS.
3. AV INTEGRATOR IS TO USE MOST CURRENT SOFTWARE/FIRMWARE ON ALL EQUIPMENT. SYSTEM MUST BE OPERATIONAL @ COMPLETION OF THE INSTALLATION AS PER SPECIFICATION 27-5117 SECTION 3.4 FIELD QUALITY CONTROL.
4. PROVIDE CONNECTIVITY REPORT @ COMPLETION OF THE INSTALLATION AS PER SPECIFICATION 27-1501 SECTION 3.2 FIELD QUALITY CONTROL.
5. PROVIDE COMPLETED DIGIDOC @ COMPLETION OF THE INSTALLATION AS PER 27-5117 SECTION 3.4 FIELD QUALITY CONTROL.

SHEET KEYNOTES

1. AV INTEGRATOR IS TO USE MOST CURRENT SOFTWARE/FIRMWARE. MOST CURRENT SOFTWARE MUST BE INSTALLED @ TIME OF COMMISSION.
2. AV INTEGRATOR IS TO USE LATEST APPROVED OWNER'S DSP TEMPLATE. MODIFY AS NEEDED TO SUIT CURRENT PROJECT.

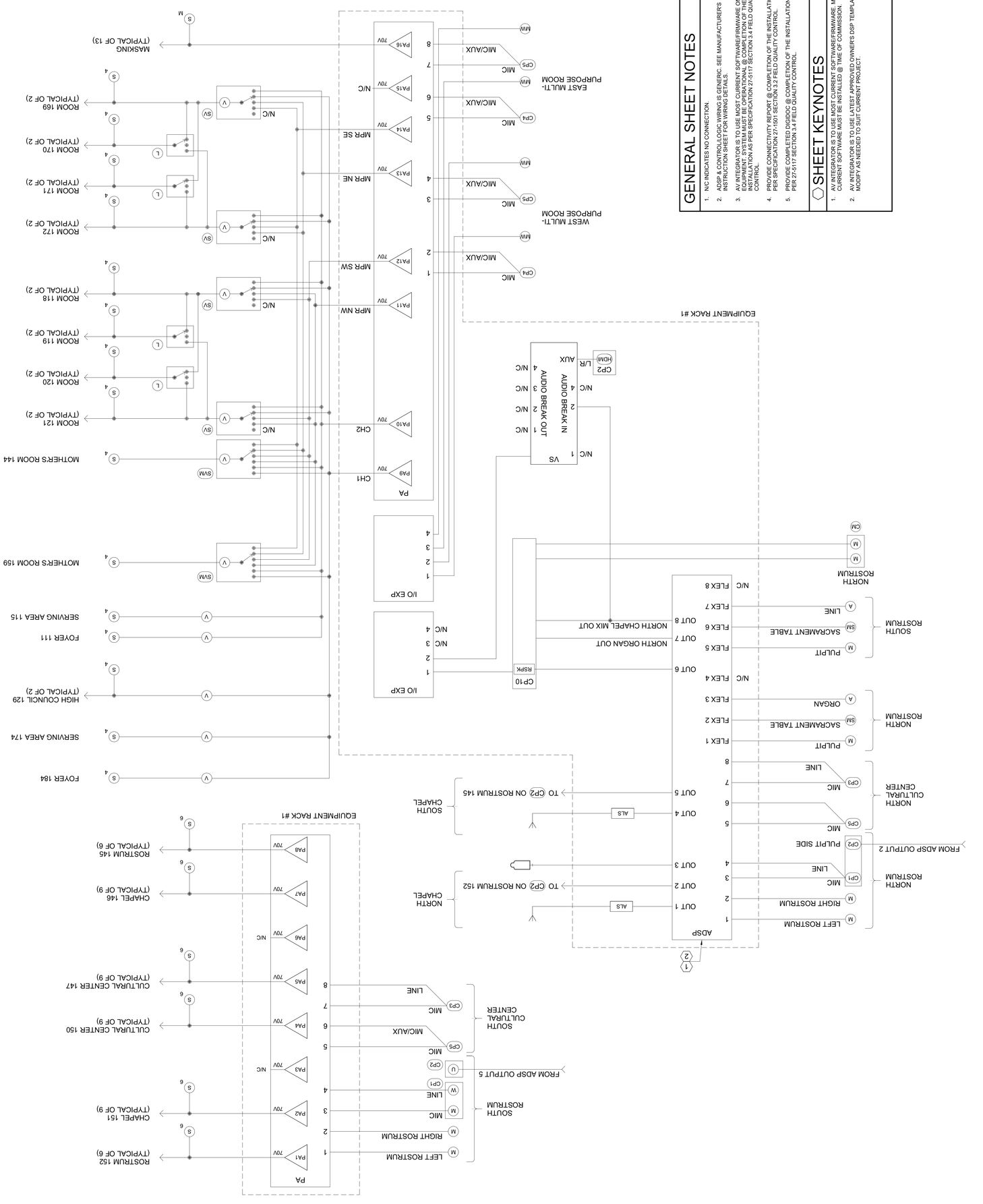

Printed 8/14/2024 8:06:54 PM

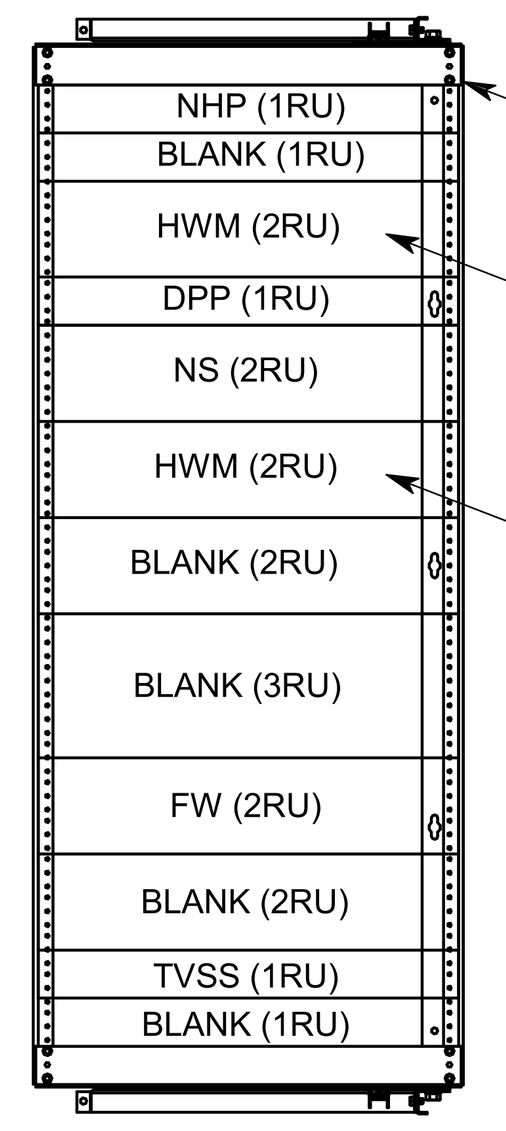

7 DATA RACK ELEVATION
NO SCALE

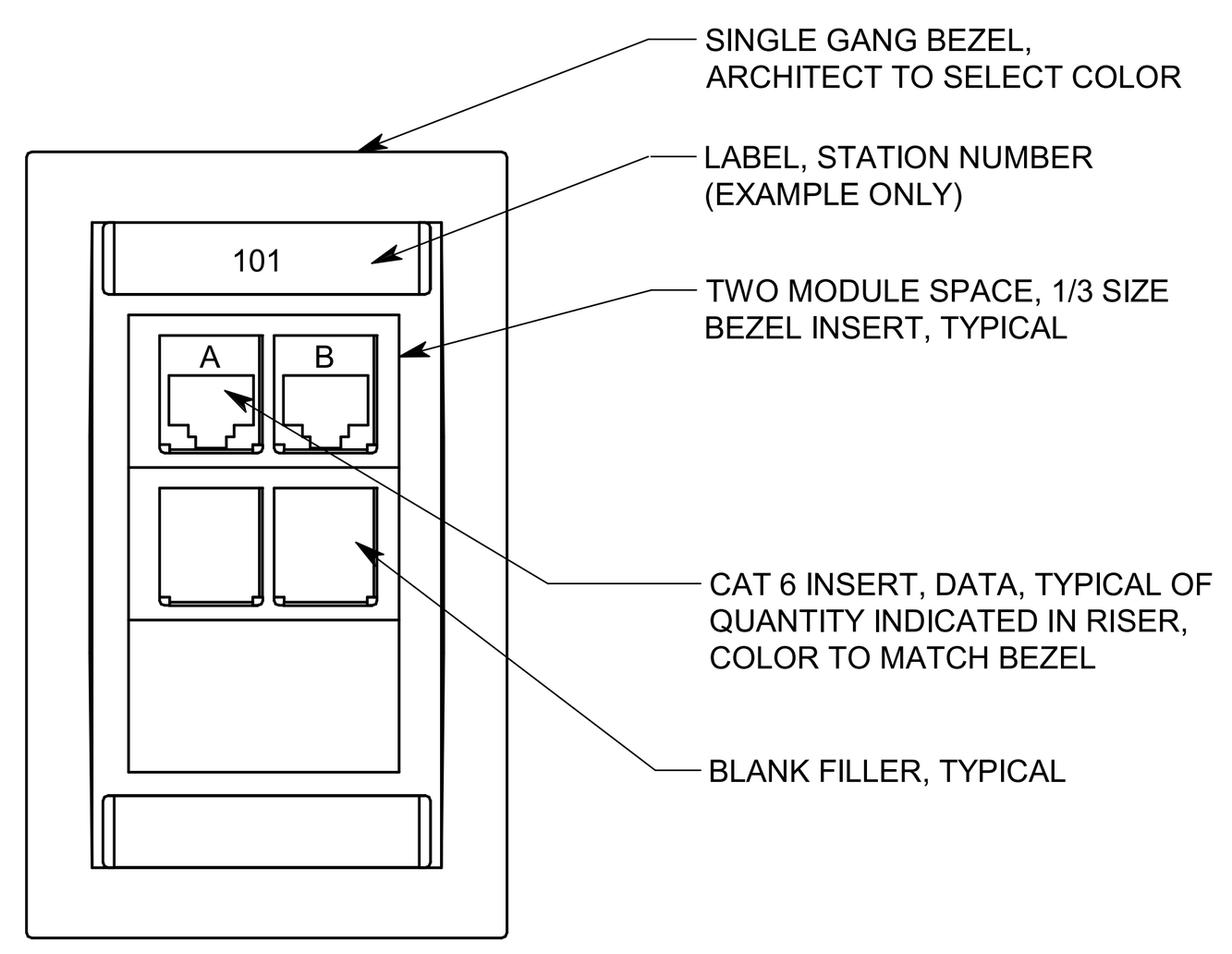

6 TYP DATA OUTLET
NO SCALE

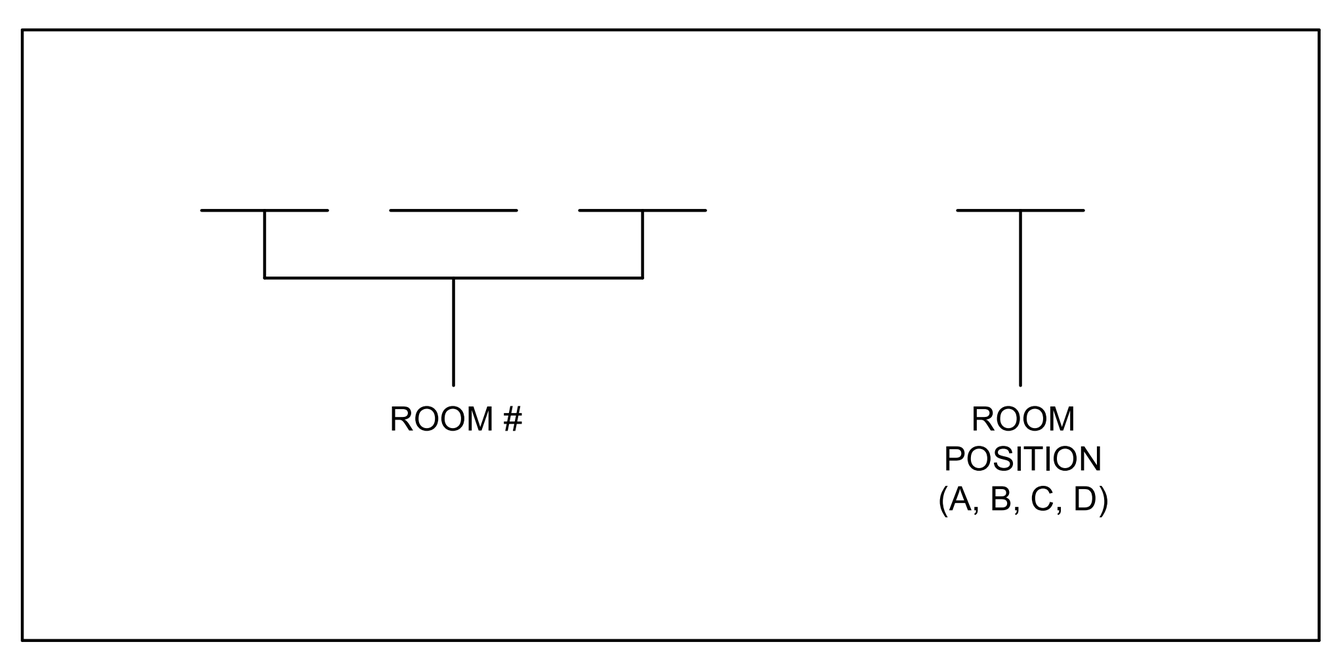

5 CABLE LABEL DETAIL
NO SCALE

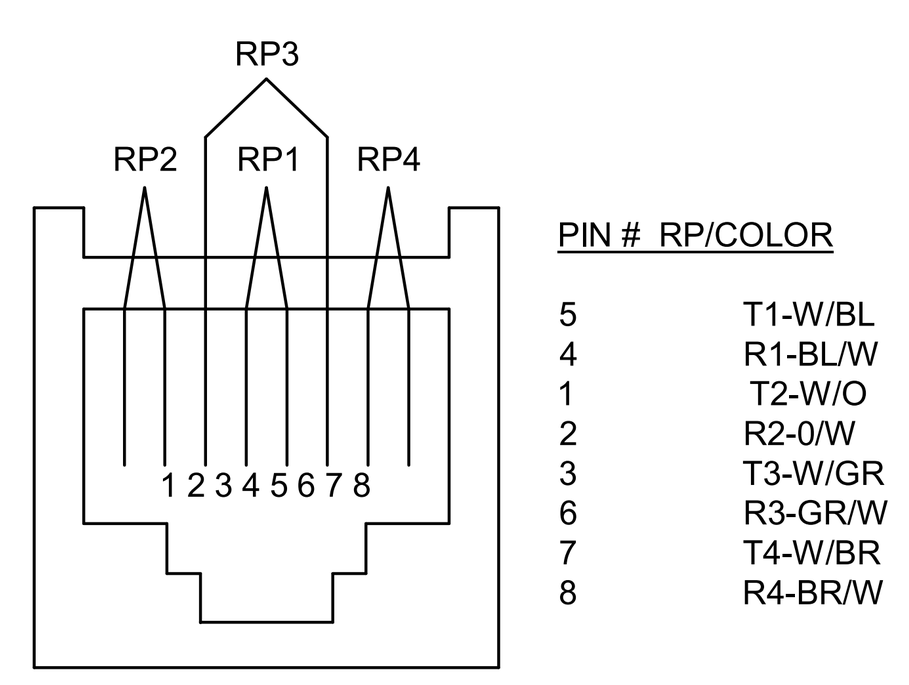

4 OUTLET PINNING DETAIL
NO SCALE

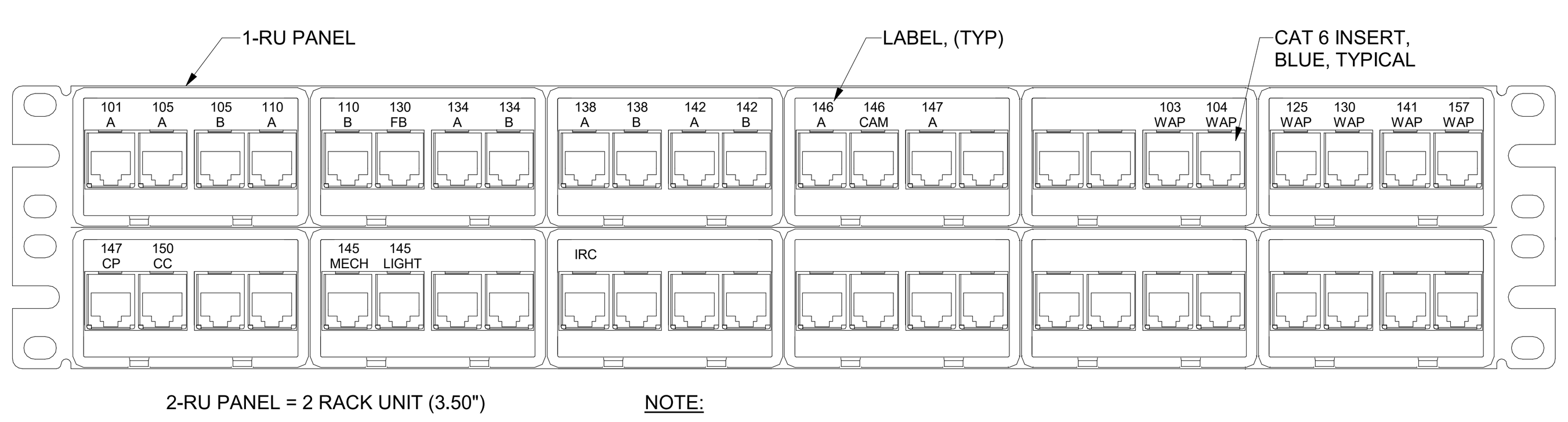

NOTE:

NUMBERS SHOWN ARE AN EXAMPLE. FINAL LABELING FOR PATCH PANEL AND OUTLETS SHALL MATCH SIGNAGE POSTED FOR ROOMS.

3 PATCH PANEL DETAIL, 48-PORT, TYPICAL
NO SCALE

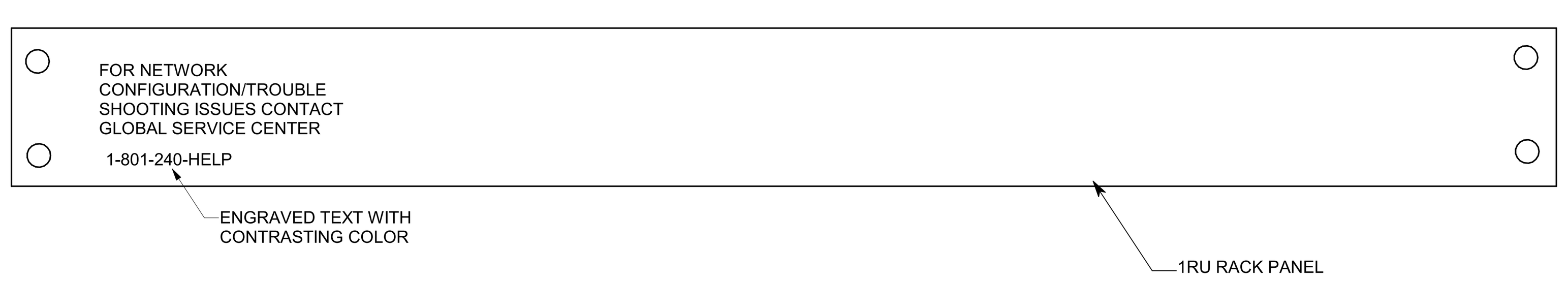

2 HELP DESK PANEL
NO SCALE

NHP

VOICE-DATA SYSTEM EQUIPMENT/CABLE LIST

THE FOLLOWING IS A PARTIAL LIST OF MATERIALS FOR THE DATA/PHONE SYSTEM. REFER TO SPECIFICATION 27 1501 FOR FULL REQUIREMENTS. VERIFY ALL PART NUMBERS WITH MANUFACTURER'S CATALOG NUMBERS AND NOTIFY CONSULTANT OF DISCREPANCIES PRIOR TO BIDDING. FURNISH MISCELLANEOUS HARDWARE NOT LISTED TO PROVIDE A COMPLETE SYSTEM.

SYM	DESCRIPTION	ACCEPTABLE TYPES
TELCO DEMARC	TELECOMMUNICATIONS PROVIDER DEMARCATION POINT	FURNISHED AND INSTALLED BY PROVIDER
ISP DEMARC	INTERNET SERVICE PROVIDER DEMARCATION POINT	FURNISHED AND INSTALLED BY PROVIDER
DPP	PATCH PANEL, DATA, 48-PORT W/ CAT 6 INSERT, BLUE (QUANTITIES OF PORTS AS REQUIRED +25%)	SEE SPECIFICATION 271501
TVSS	SURGE SUPPRESSOR AND SWITCHER W/ UL LISTED PLUG STRIP	FURNISHED AND INSTALLED BY AV INSTALLER
	UL LISTED POWER STRIP	6 OUTLET POWER STRIP OR EQUAL
D(#)	STATION CABLE, DATA-CAT 6, DATA, BLUE JACKET (#) INDICATES NUMBER OF CABLES IF MORE THAN ONE	SEE SPECIFICATION 271501
▽ WAP	DATA OUTLET, WIRELESS ACCESS POINT SINGLE GANG BEZEL	SEE SPECIFICATION 271501 SEE DETAIL 10/ET601
	BEZEL INSERTS	SEE SPECIFICATION 271501
	CAT 6 JACK-DATA (1)	SEE SPECIFICATION 271501
▼	VOICE OUTLET SINGLE GANG BEZEL	SEE SPECIFICATION 271501
	BEZEL INSERTS	SEE SPECIFICATION 271501
	CAT 6 JACK-DATA (1)	SEE SPECIFICATION 271501
▽ ▽2	DATA OUTLET SINGLE GANG BEZEL	SEE SPECIFICATION 271501
	BEZEL INSERTS	SEE SPECIFICATION 271501
	CAT 6 JACK-DATA (1 OR 2)	SEE SPECIFICATION 271501
FB	DATA OUTLET BEZEL COMPATIBLE WITH FLOOR BOX	SEE SPECIFICATION 271501 SEE ET601
	BEZEL INSERTS	SEE SPECIFICATION 271501
	CAT 6 JACK-DATA	SEE SPECIFICATION 271501
	COPPER CAT 6 PATCH CABLES (INCLUDE CABLES LONG ENOUGH TO CONNECT TO EQUIPMENT IN EQUIPMENT CABINET RACK #1 AS NEEDED)	SEE SPECIFICATION 271501
	CAT 6 J-HOOKS	CADDY CAT32Z34
HWM	HORIZONTAL WIRE MANAGER HORIZONTAL WIRE MANAGER SHALL NOT HAVE A DEPTH OF MORE THAN 3"	SEE SPECIFICATION 271501
NS	NETWORK SWITCH, OWNER STANDARD	OWNER FURNISHED-CONTRACTOR INSTALLED
	RACK MOUNT SHELF	MIDDLE ATLANTIC U2
IRC	IRRIGATION REMOTE CONNECTION	FURNISHED AND INSTALLED BY IRRIGATION CONTRACTOR
BMG	BUILDING MANAGEMENT GATEWAY	FURNISHED AND INSTALLED BY MECHANICAL CONTROLS CONTRACTOR
FW	INTERNET FIREWALL, OWNER STANDARD	OWNER FURNISHED-CONTRACTOR INSTALLED SEE DETAIL 1/TT601
	RACK MOUNT SHELF	MIDDLE ATLANTIC U2
ISP MODEM	INTERNET SERVICE MODEM	OWNER FURNISHED-CONTRACTOR INSTALLED
	RACK MOUNT SHELF	MIDDLE ATLANTIC U4
110 BLOCK	110 PUNCH DOWN BLOCK, CAT6	SEE SPECIFICATIONS 271501
WAP	WIRELESS ACCESS POINT. OWNER STANDARD. INSTALL AT EACH 'WAP' LOCATION SHOWN ON ET102. PROVIDE WALL BRACKET AS SHOWN ON DETAIL	OWNER FURNISHED-CONTRACTOR INSTALLED
⁄2	DATA RACK, SWING FRAME	MIDDLE ATLANTIC SFR-20-18 SEE DETAILS 3/ET602 AND 7/TT601
CC CP	AUDIO VIDEO USER INTERFACE	INTERFACE BY AV INSTALLER, DATA CONNECTION BY DIVISION 27 1501 SEE SHEETS TA601, AND TA602
	CAT6 DATA JACK	SEE SPECIFICATION 27 1501
NHP	NETWORK HELP DESK PANEL	1RU RACK PANEL WITH CUSTOM LABELING SEE DETAIL 2/TT601

NOTE: ALL PATCH PANELS AND ACCESSORIES SHALL BE BLACK IN COLOR

AUDIO-VIDEO CABLE EQUIPMENT LIST

SYM	DESCRIPTION	QTY	ACCEPTABLE TYPES
A(X)	HDMI CABLE (X) INDICATES NUMBER OF CABLES, IF MORE THAN ONE	A/R	BELDEN HD 800-XX LIBERTY HD 1000-XX OR AS APPROVED BY CONSULTANT ('XX' = LENGTH REQUIRED)
C(X)	CONTROL CABLE, WHITE JACKET (X) INDICATES NUMBER OF CABLES, IF MORE THAN ONE	A/R	BELDEN 1872A WEST PENN 4246 LIBERTY 24-4P-L6-EN OR AS APPROVED BY CONSULTANT
H(X)	HDBASE T CABLE, BLACK JACKET, (X) INDICATES NUMBER OF CABLES, IF MORE THAN ONE	A/R	WEST PENN 4246AF COMMSCOPE 1291B F/UTP BELDEN 10GX62F OR AS APPROVED BY CONSULTANT
LC	CONTROL CABLE FOR PULPIT LIFT MOTOR 3 CONDUCTOR, 20 AWG	A/R	BELDEN 8772 WEST PENN 232 OR AS APPROVED BY CONSULTANT
L(X)	LINE LEVEL CABLE, (X) INDICATES NUMBER OF CABLES, IF MORE THAN ONE	A/R	BELDEN 9451 WEST PENN 454 LIBERTY 22-1P-EZ OR AS APPROVED BY CONSULTANT
M(X)	MICROPHONE CABLE, (X) INDICATES NUMBER OF CABLES, IF MORE THAN ONE	A/R	LIBERTY 22-1P-EZ BELDEN 9451 WEST PENN 454 OR AS APPROVED BY CONSULTANT
P(X)	HD-SDI CABLE, RG-6, (X) INDICATES NUMBER OF CABLES, IF MORE THAN ONE	A/R	WEST PENN 6350 BELDEN 1694A OR AS APPROVED BY CONSULTANT
S(X)	SPEAKER CABLE, (X) INDICATES NUMBER OF CABLES, IF MORE THAN ONE	A/R	BELDEN 8471 WEST PENN 225 LIBERTY 16-2C-GRY OR AS APPROVED BY CONSULTANT
U(X)	USB CABLE, (X) INDICATES NUMBER OF CABLES, IF MORE THAN ONE	A/R	USB 2.0 OR GREATER, PRE-MADE LIBERTY U026-20M OR AS APPROVED BY CONSULTANT
UC(X)	USB-C CABLE, TERMIANTED AT EACH END, USB 3.2 COMPLIANT CABLE	A/R	EXTRON USBC PRO/XX (OR APPROVED EQUIVALENT)
RF	RF CABLE, 50 OHM, COAXIAL, RG-59 FOR ALS	A/R	WEST PENN 25812 BELDEN 89907

MANUFACTURER'S NAMES AND TELEPHONE NUMBERS ARE LISTED IN THE SPECIFICATIONS
A/R = AS REQUIRED

GENERAL SHEET NOTES

1. LABEL ALL CABLE REGARDLESS OF LENGTH.
2. THE EQUIPMENT LABELING IDENTIFIED ON DETAILS IN THESE DRAWINGS ARE EXAMPLES ONLY. PRIOR TO FABRICATION, SUBMIT THE NOMENCLATURE FOR ALL CABLING AND EQUIPMENT TO THE CONSULTANT APPROVAL.
3. COIL 5' OF EXTRA CABLE AT THE TECHNOLOGY ROOM AND 18"' AT THE OUTLET FOR EACH CABLE RUN.
4. USE CADDY CLIPS OR BRIDLE RINGS FOR ALL CABLE OUTSIDE OF CONDUIT. GENERAL PROJECT NOTES ET601.
5. ALL CABLE AND UTP TO TERMINATE ON BOTH ENDS.
6. ALL VOICE-DATA OUTLETS ON WALLS SHALL BE MOUNTED WITHIN 6" OF A POWER OUTLET. IF CONTRADICTIONS ARISE ON PLANS, NOTIFY ENGINEER.
7. REFER TO SHEET ET101 AND ET102 FOR VOICE-DATA JACK LOCATIONS AND ROUTING OF AV CABLE.
8. EQUIPMENT RACK TO BE INSTALLED BY AV INSTALLER.
9. ALL VOICE-DATA CABLING AND EQUIPMENT SHALL BE INSTALLED ACCORDING TO DIVISION 27 1501.
10. INSTALL OWNER FURNISHED NETWORK EQUIPMENT SHOWN. AS PART OF INSTALLATION SET UP AND CONFIGURE DEVICES IN ACCORDANCE WITH OWNER REQUIREMENTS. COORDINATE WITH LOCAL FACILITIES MANAGER.
11. COORDINATE WITH FACILITIES MANAGER AND PROJECT MANAGER WELL IN ADVANCE OF PROJECT COMPLETION TO ENSURE INSTALLATION OF ALL OWNER FURNISHED EQUIPMENT IS INSTALLED AND SET UP PROPERLY. IN ADDITION, ENSURE OWNER PROVIDES INTERNET SERVICE TO BUILDING PRIOR TO FINAL INSTALLATION OF AV AND VOICE DATA EQUIPMENT.
12. INSTALL A DATA PATCH CABLE TO 'NS' FOR ALL DATA LOCATIONS SHOWN ON PLANS.
13. FURNISH AND INSTALL ALL AUDIO-VIDEO CABLE SHOWN. PROVIDE 3' EXTRA CABLE AT OUTLET END AND 15' EXTRA CABLE AT EQUIPMENT RACK. COIL AND LABEL.
14. INSTALL, PATCH IN, AND SET-UP OWNER FURNISHED WIRELESS ACCESS POINTS.
15. SEE "TA" AND "ET" SHEETS FOR DEVICE LOCATIONS AND ADDITIONAL COORDINATION.
16. ALL HORIZONTAL CABLING AND TERMINATION SHALL BE FROM SINGLE MANUFACTURER, AS NECCESSARY & PROVIDE EXTENDED SYSTEM WARRANTY OF 25 YEARS OR GREATER.
17. CABLE RUNS ORIGINATING FROM OUTSIDE THE RACK SHALL BE TERMINATED TO DPP, WITH PATCH CABLE TO NETWORK SWITCH. DEVICES IN THE SAME RACK AS THE NETWORK SWITCH MAY BE CABLED DIRECTLY TO THE NETWORK SWITCH.

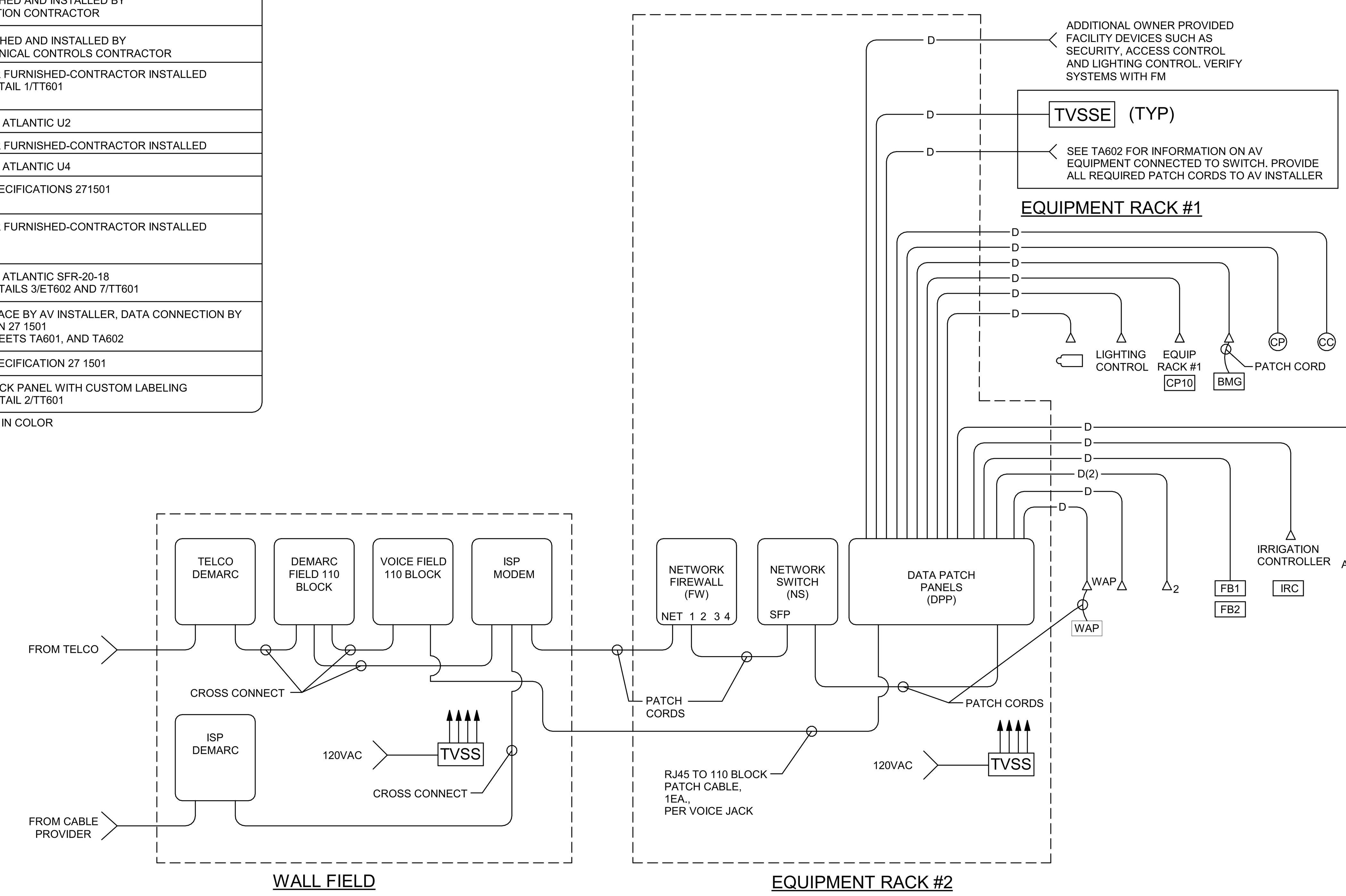

1 STRUCTURED CABLING RISER DIAGRAM
NO SCALE

bhd ARCHITECTS
www.bhdarchitects.com
Phone 801.571.0010
Fax 801.571.0303
Toll Free 888.571.0010
65 East Wadsworth Park Drive Suite 205 Draper, Utah 84020

LICENSED PROFESSIONAL ENGINEER No. 5148728 DAVID G. HINCKLEY 8-19-24 STATE OF UTAH

SPECTRUM ENGINEERS
324 S. State St., Suite 400
Salt Lake City, UT 84111
800-678-7077
801-328-5151
fax: 801-328-5155
www.spectrum-engineers.com

THE CHURCH OF JESUS CHRIST OF LATTER-DAY SAINTS

Orem YSA 3rd Stake 10 Ward Stake Center

Approx. 1700 West 575 South Vineyard, Utah 84059

Date: 9 Jul 2024 | BHD #: 2344 | County Parcel: 39:228:0001 | Plan Series: 2024 10 Ward SC | Owner #: 590-1876

Drawing Issue and Revision Schedule

#	Date	Description
1	15 Aug 2024	Bid Documents

TELECOM SCHEDULES, NOTES, DETAILS AND DIAGRAM

TT601

Printed 8/14/2024 8:08:53 PM

PROPOSED BUILDING
FFE = 4534.75'

FDC location.

83'-9"

403 L.F. NEW 8" BLUE PVC
C-900 DR-18 WATER MAIN LINE
FROM BEND TO BEND

393 L.F. NEW 8" PVC
SDR-35 SEWER MAIN
LINE @ 0.5%

LENGTH
ANGLE
64.28°
SEGMENT

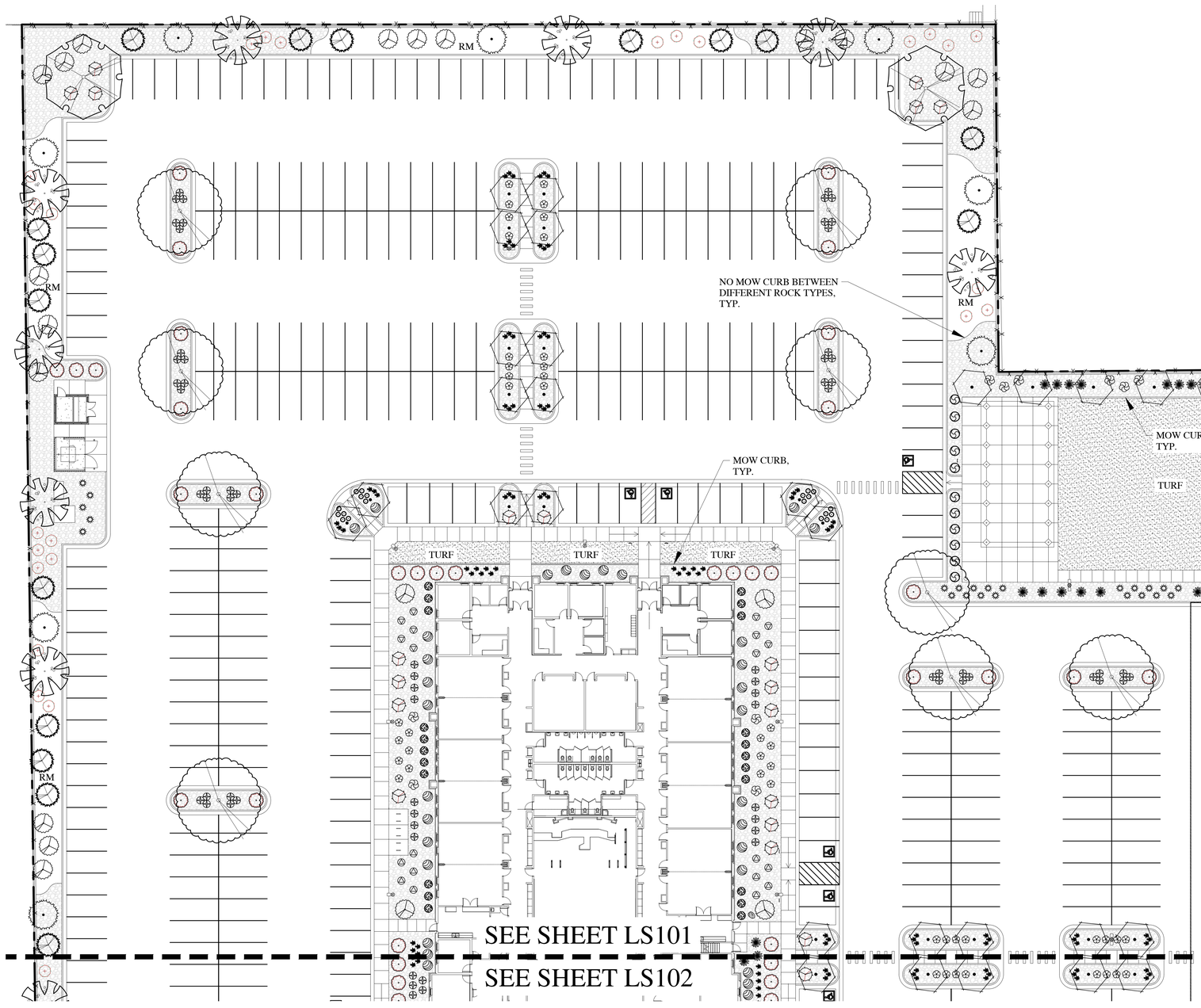

BROADLEAF DECIDUOUS LEGEND

SYMBOL	BOTANICAL NAME/COMMON NAME	QTY	SIZE
	ACER MIYABEI 'MORTON' STATE STREET STATE STREET MAPLE	3	2" CAL.
	CARPINUS CAROLINIANA 'RISING FIRE' RISING FIRE AMERICAN HORNBEAM	40	2" CAL.
	CERCIS CANADENSIS EASTERN REDBUD*	10	2" CAL.
	GLEDITSIA TRIACANTHOS 'IMPERIAL' IMPERIAL HONEYLOCUST	4	2" CAL.
		6	2" CAL.
	ZELKOVA SERRATA 'GREEN VASE' GREEN VASE ZELKOVA*	12	2" CAL.

CONIFER / EVERGREEN LEGEND

SYMBOL	BOTANICAL NAME/COMMON NAME	QTY	SIZE
	PICEA OMORIKA SERBIAN SPRUCE*	12	6-7' TALL
	PINUS NIGRA 'OREGON GREEN' OREGON GREEN PINE*	23	6-7' TALL

SYMBOL	BOTANICAL NAME/COMMON NAME	QTY	SIZE
	HEMEROCALLIS 'STELLA D'ORO' STELLA D'ORO DAYLILY*	29	1 GAL.
	HEMEROCALLIS X 'ROSY RETURNS' ROSY RETURNS DAYLILY*	113	1 GAL.

GRASS LEGEND

SYMBOL	BOTANICAL NAME/COMMON NAME	QTY	SIZE
	CALAMAGROSTIS ACUTIFLORA 'KARL FOERSTER' FEATHER REED GRASS*	32	1 GAL.
	HELICTOTRICHON SEMPERVIRENS 'SAPPHIRE' BLUE OAT AVENA GRASS*	82	1 GAL.

SHRUB LEGEND

SYMBOL	BOTANICAL NAME/COMMON NAME	QTY	SIZE
	ARCTOSTAPHYLOS UVA URSI 'MASSACHUSETTS' MASSACHUSETTS KINNIKINNICK	43	5 GAL.
	BUDDLEIA X 'FLUTTERBY PETITE' DWARF BUTTERFLY BUSH*	104	5 GAL.
	CERCOCARPUS INTRICATUS LITTLELEAF MOUNTAIN MAHOGANY*	27	5 GAL.
	FORSYTHIA X 'COURTASOL' GOLD TIDE FORSYTHIA	21	5 GAL.
	HIBISCUS SYRIACUS 'ANTONG TWO' LIL' KIM ROSE OF SHARON	13	5 GAL.
	PHYSOCARPUS OPULIFOLIUS 'LITTLE DEVIL' LITTLE DEVIL NINEBARK*	56	5 GAL.
	PINUS MUGO 'SLOWMOUND' SLOWMOUND MUGO PINE*	22	5 GAL.
	PRUNUS BESSEYI 'PAWNEE BUTTES' PAWNEE BUTTES SAND CHERRY*	77	5 GAL.
	RHUS AROMATICA 'GRO-LOW' GRO LOW SUMAC*	39	5 GAL.
	ROSA X 'WEKSCHNEEKOPPE' SNOW PAVEMENT RUGOSA SHRUB ROSES*	60	5 GAL.
	RIBES ALPINUM 'GREEN MOUND' GREEN MOUND CURRANT	45	5 GAL.
	SPIRAEA JAPONICA 'MAGIC CARPET' MAGIC CARPET SPIREA	20	5 GAL.
	SYMPHORICARPOS X CHENAULTII 'HANCOCK' HANCOCK CORALBERRY* (LOW-SPREADING)	11	5 GAL.

GROUNDCOVERS LEGEND

SYMBOL	BOTANICAL NAME/COMMON NAME	QTY	SIZE
	ROCK MULCH TO BE 3/4" - 1" SIZE 'SOUTHTOWN' CRUSHED ROCK FROM UTAH LANDSCAPE ROCK IN NEPHI, UTAH. IMPLEMENT IN AREA SHOWN AT A 3" DEPTH OVER WEED BARRIER FABRIC.	PER PLAN	PER PLAN
RM	ROCK MULCH TO BE 2" - 4" SIZE 'OAK CREEK PLUM' COBBLE ROCK FROM UTAH LANDSCAPE ROCK IN NEPHI, UTAH. IMPLEMENT IN AREA SHOWN AT A 6" DEPTH OVER WEED BARRIER FABRIC.	PER PLAN	PER PLAN
	DESERT SAGE BLUEGRASS FROM CHANSHARE SOD FARMS. INSTALL PER SOD LAYING NOTES	SOD ROLLS	SOD ROLLS
	DECORATIVE LANDSCAPE BOULDERS SIZE: 2', 3' AND 4' BOULDERS (MATCH/COMPLIMENT DECORATIVE ROCK MULCH IN PLANTING AREAS)	PER PLAN	PER PLAN

DESIGN CRITERIA

ECO-REGION	10.1 NORTHERN COLD DESERT
CLIMATE	U.S. HARDINESS ZONE 5
ZONING ORDINANCE	VINEYARD CITY
WATER AVAILABILITY	NA
SOIL TYPE	NA
SLOPES	SEE GRADING PLAN
WIND	SOUTH PREVAILING
SETBACKS/EASEMENTS	NA
MICROCLIMATES	NA
SOIL PH	NA
LAWN AREA	28% OF TOTAL LANDSCAPE (27,139 SQ. FT.)
UNDEVELOPED	NA
PROPERTY IRRIGATION SYSTEM	AUTOMATED SYSTEM WITH SMART CONTROLLER

LANDSCAPE DATA

TOTAL SITE AREA	415,178 SQ.FT.*		9.5 ACRES
TOTAL LANDSCAPE AREA	96,139 SQ.FT.*		23%
PLANTER AREA	69,000 SQ.FT.		72%
LAWN AREA	27,139 SQ.FT.		28%
TREES ON SITE	161**		
		TOTAL REQ'D = NA	PROVIDED = 161
		DECIDUOUS REQ'D = NA	PROVIDED = 117
		EVERGREEN REQ'D = NA	PROVIDED = 44
		SHRUBS REQ'D = NA	PROVIDED = 1,404
		DROUGHT TOLERANT REQ'D = NA	
ADDITIONAL INFO	NA	DROUGHT TOLERANT PROVIDED = 1,297 (92%	

* PARK STRIP LANDSCAPE OF 5,826 SQ.FT. NOT INCLUDED IN THIS TOTAL
** TREE/PLANTING COUNT INCLUDES SPRINGWATER BUILDING SECTION OF SITE

LANDSCAPE NOTES

1. STOCKPILED, SCREENED TOPSOIL TO BE IMPLEMENTED IN ALL PLANTING AREAS AT THE FOLLOWING DEPTHS: 12" IN ALL SHRUB BEDS, 5" IN ALL LAWN AREAS.
2. LAWN TO BE A DESERT SAGE BLUEGRASS BLEND (FROM CHANSHARE SOD) AND BE IMPLEMENTED AS SOD. REFER TO SOD LAYING NOTES FOR MORE INFORMATION.
3. 6" CONCRETE MOWCURB TO BE IMPLEMENTED BETWEEN ALL SHRUB BED AND LAWN AREAS AS SHOWN ON PLAN.
4. ROCK MULCH TO BE IMPLEMENTED IN ALL PLANTER BEDS AT DEPTHS NOTED IN LEGEND. ROCK MULCH TO BE CLEAN AND FREE OF DIRT AND DEBRIS, PLACED AT A UNIFORM DEPTH AND RAKED SMOOTH. INSTALL WEED BARRIER FABRIC UNDER ALL ROCK MULCH.
5. ALL TREES TO BE STAKED AT TIME OF PLANTING. SEE DETAILS FOR SPECIFICS. REMOVE STAKING AFTER ONE YEAR.
6. PLANTS LOCATED WITHIN REQUIRED SIGHT VISIBILITY TRIANGLES SHALL BE PRUNED REGULARLY TO PERMIT UNOBSTRUCTED VISION. PLANT MATERIAL SHALL BE MAINTAINED TO BE LOWER THAN 3' (SHURBS) OR TALLER THAN 7' (BOTTOM OF TREE CANOPY.)
7. ALL PLANTING, IRRIGATION, AND OTHER SITE IMPROVEMENTS SHALL BE INSTALLED BY A LANDSCAPE CONTRACTOR RESPONSIBLE TO VERIFY ALL COUNTS AND QUANTITIES ON PLANS.

SOD LAYING NOTES

1. LAY SOD WITHIN 24 HOURS OF BEING LIFTED.
2. LAY SOD IN ROWS WITH JOINTS STAGGERED. BUTT SECTIONS CLOSELY WITHOUT OVERLAPPING OR LEAVING GAPS BETWEEN SECTIONS. CUT OUT IRREGULAR OR THIN SECTIONS WITH A SHARP KNIFE.
3. LAY SOD FLUSH WITH ADJOINING EXISTING SODDED OR PAVED SURFACES.
4. AFTER SODDING HAS BEEN COMPLETED, ROLL HORIZONTAL SURFACE AREAS IN TWO DIRECTIONS PERPENDICULAR TO EACH OTHER WITH A 150 POUND SOD ROLLER. REPAIR AND RE-ROLL AREAS WITH DEPRESSIONS, LUMPS OR OTHER IRREGULARITIES. HEAVY ROLLING TO CORRECT IRREGULARITIES IN GRADE IS NOT PERMITTED.
5. WATER ALL SODDED AREAS IMMEDIATELY AFTER SOD LAYING TO OBTAIN MOISTURE PENETRATION THROUGH SOD INTO TOP 4" OF TOPSOIL.
6. PROVIDE ADEQUATE PROTECTION OF SODDED AREAS AGAINST TRESPASSING, EROSION AND DAMAGE OF ANY KIND. REMOVE THIS PROTECTION AFTER SODDED AREAS HAVE BEEN ACCEPTED BY THE OWNER.
7. REPLACE DAMAGED AREAS AT NO ADDITIONAL COST TO OWNER.

PLANT COVERAGE TABLE

	SHRUB MATURE COVERAGE	ACTUAL % COVERAGE	TREE COVERAGE INTENT	TREE COUNT
STREET FRONTAGE	25-50%	28%	FRAME BUILDING	0
PRIMARY ENTRIES	30-50%	47%	FRAME ENTRY	4
BUILDING PERIMETER	25-45%	27%	ACCENT BUILDING	8
PERIMETER SIDES	5-15%	12%	SCREEN LOT	29
PERIMETER REAR	5-15%	13%	SCREEN LOT	14

In Site DESIGN GROUP
Landscape Architecture Land Planning
17 North 470 West American Fork, Utah 84003
801.756.5043 www.in-sitedesigngroup.com

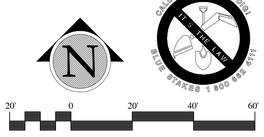

SCALE: 1"=20'-0" ON 30X42 SHEET

bhd ARCHITECTS
www.bhdarchitects.com
Phone 801.571.0010
Fax 801.571.0303
Toll Free 888.571.0010
65 East Wadsworth Park Drive
Suite 205 Draper, Utah 84020



THE CHURCH OF JESUS CHRIST OF LATTER-DAY SAINTS

Orem YSA 3rd 10 Ward Building
Orem UT YSA 3rd Stake

Approx. 1700 West 575 South
Vineyard, Utah 84059

Owner #: 390-1676
Plan Series: 2024 10 Ward SC
County Parcel: 37:228:0001
BHD #: 2244
Date: 15 Aug 2024

Drawing Issue and Revision Schedule		
#	Date	Description
1.	15 Aug 2024	Bid Documents
2.	27 Aug 2024	Addendum #1
3.	14 OCT 2024	Addendum #2

LANDSCAPE PLAN

LS101

Printed: 14 Oct 2024 5:07 PM

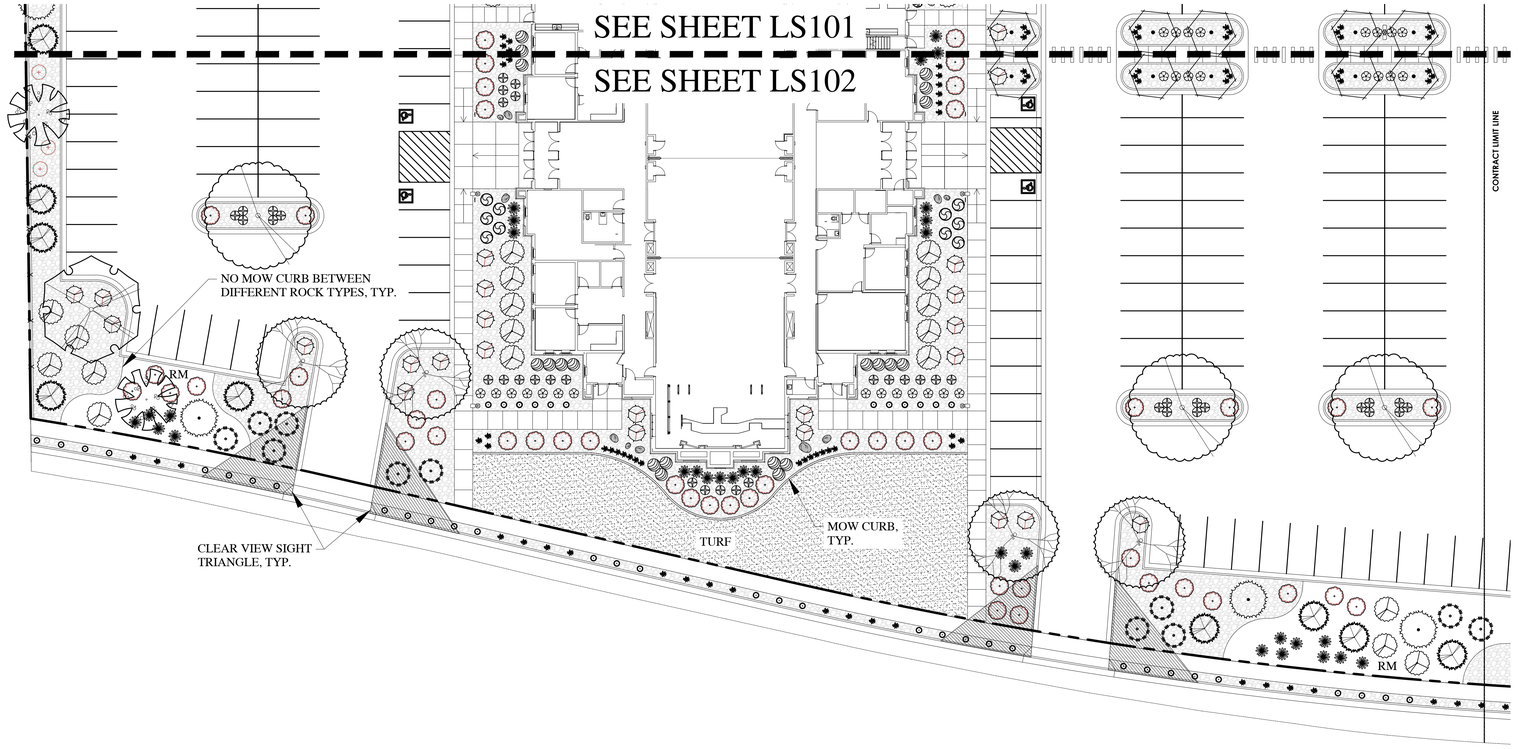

DESIGN CRITERIA

ECO-REGION	10.1 NORTHERN COLD DESERT
CLIMATE	U.S. HARDINESS ZONE 5
ZONING ORDINANCE	VINEYARD CITY
WATER AVAILABILITY	NA
SOIL TYPE	NA
SLOPES	SEE GRADING PLAN
WIND	SOUTH PREVAILING
SETBACKS/EASEMENTS	NA
MICROCLIMATES	NA
SOIL PH	NA
LAWN AREA	28% OF TOTAL LANDSCAPE (27,139 SQ. FT.)
UNDEVELOPED	NA
PROPERTY IRRIGATION SYSTEM	AUTOMATED SYSTEM WITH SMART CONTROLLER

LANDSCAPE DATA

TOTAL SITE AREA	415,178 SQ.FT.*		9.5 ACRES
TOTAL LANDSCAPE AREA	96,139 SQ.FT.*		23%
PLANTER AREA	69,000 SQ.FT.		72%
LAWN AREA	27,139 SQ.FT.		28%
TREES ON SITE	161**		
		TOTAL REQ'D = NA	PROVIDED = 161
		DECIDUOUS REQ'D = NA	PROVIDED = 117
		EVERGREEN REQ'D = NA	PROVIDED = 44
		SHRUBS REQ'D = NA	PROVIDED = 1,404
		DROUGHT TOLERANT REQ'D = NA	
ADDITIONAL INFO	NA	DROUGHT TOLERANT PROVIDED = 1,297 (92%)	

* PARK STRIP LANDSCAPE OF 5,826 SQ.FT. NOT INCLUDED IN THIS TOTAL
** TREE/PLANTING COUNT INCLUDES SPRINGWATER BUILDING SECTION OF SITE

PLANT COVERAGE TABLE

	SHRUB MATURE COVERAGE	ACTUAL % COVERAGE	TREE COVERAGE INTENT	TREE COUNT
STREET FRONTAGE	25-50%	28%	FRAME BUILDING	0
PRIMARY ENTRIES	30-50%	47%	FRAME ENTRY	4
BUILDING PERIMETER	25-45%	27%	ACCENT BUILDING	8
PERIMETER SIDES	5-15%	12%	SCREEN LOT	29
PERIMETER REAR	5-15%	13%	SCREEN LOT	14

LANDSCAPE NOTES

1. STOCKPILED, SCREENED TOPSOIL TO BE IMPLEMENTED IN ALL PLANTING AREAS AT THE FOLLOWING DEPTHS: 12" IN ALL SHRUB BEDS, 5" IN ALL LAWN AREAS.
2. LAWN TO BE A DESERT SAGE BLUEGRASS BLEND (FROM CHANSHARE SOD) AND BE IMPLEMENTED AS SOD. REFER TO SOD LAYING NOTES FOR MORE INFORMATION.
3. 6" CONCRETE MOWCURB TO BE IMPLEMENTED BETWEEN ALL SHRUB BED AND LAWN AREAS AS SHOWN ON PLAN.
4. ROCK MULCH TO BE IMPLEMENTED IN ALL PLANTER BEDS AT DEPTHS NOTED IN LEGEND. ROCK MULCH TO BE CLEAN AND FREE OF DIRT AND DEBRIS, PLACED AT A UNIFORM DEPTH AND RAKED SMOOTH. INSTALL WEED BARRIER FABRIC UNDER ALL ROCK MULCH.
5. ALL TREES TO BE STAKED AT TIME OF PLANTING. SEE DETAILS FOR SPECIFICS. REMOVE STAKING AT THE END OF THE GUARANTEE PERIOD.
6. PLANTS LOCATED WITHIN REQUIRED SIGHT VISIBILITY TRIANGLES SHALL BE PRUNED REGULARLY TO PERMIT UNOBSTRUCTED VISION. PLANT MATERIAL SHALL BE MAINTAINED TO BE LOWER THAN 3' (SHURBS) OR TALLER THAN 7' (BOTTOM OF TREE CANOPY.)
7. THE QUANTITIES SHOWN ON THE PLANT LEGEND ARE FOR CONVENIENCE ONLY. THE LANDSCAPE CONTRACTOR SHALL VERIFY ALL PLANT COUNTS AND QUANTITIES ON THE PLANS. LANDSCAPE CONTRACTOR RESPONSIBLE TO VERIFY ALL COUNTS AND QUANTITIES ON PLANS.

SOD LAYING NOTES

1. LAY SOD WITHIN 24 HOURS OF BEING LIFTED.
2. LAY SOD IN ROWS WITH JOINTS STAGGERED. BUTT SECTIONS CLOSELY WITHOUT OVERLAPPING OR LEAVING GAPS BETWEEN SECTIONS. CUT OUT IRREGULAR OR THIN SECTIONS WITH A SHARP KNIFE.
3. LAY SOD FLUSH WITH ADJOINING EXISTING SODDED OR PAVED SURFACES.
4. AFTER SODDING HAS BEEN COMPLETED, ROLL HORIZONTAL SURFACE AREAS IN TWO DIRECTIONS PERPENDICULAR TO EACH OTHER WITH A 150 POUND SOD ROLLER. REPAIR AND RE-ROLL AREAS WITH DEPRESSIONS, LUMPS OR OTHER IRREGULARITIES. HEAVY ROLLING TO CORRECT IRREGULARITIES IN GRADE IS NOT PERMITTED.
5. WATER ALL SODDED AREAS IMMEDIATELY AFTER SOD LAYING TO OBTAIN MOISTURE PENETRATION THROUGH SOD INTO TOP 4" OF TOPSOIL.
6. PROVIDE ADEQUATE PROTECTION OF SODDED AREAS AGAINST TRESPASSING, EROSION AND DAMAGE OF ANY KIND. REMOVE THIS PROTECTION AFTER SODDED AREAS HAVE BEEN ACCEPTED BY THE OWNER.
7. REPLACE DAMAGED AREAS AT NO ADDITIONAL COST TO OWNER.

BROADLEAF DECIDUOUS LEGEND

SYMBOL	BOTANICAL NAME/COMMON NAME	QTY	SIZE
	ACER MIYABEI 'MORTON' STATE STREET STATE STREET MAPLE	3	2" CAL.
	CARPINUS CAROLINIANA 'RISING FIRE' RISING FIRE AMERICAN HORNBEAM	40	2" CAL.
	CERCIS CANADENSIS EASTERN REDBUD*	10	2" CAL.
	GLEDITSIA TRIACANTHOS 'IMPERIAL' IMPERIAL HONEYLOCUST	4	2" CAL.
		6	2" CAL.
	ZELKOVA SERRATA 'GREEN VASE' GREEN VASE ZELKOVA*	12	2" CAL.

CONIFER / EVERGREEN LEGEND

SYMBOL	BOTANICAL NAME/COMMON NAME	QTY	SIZE
	PICEA OMORIKA SERBIAN SPRUCE*	12	6-7' TALL
	PINUS NIGRA 'OREGON GREEN' OREGON GREEN PINE*	23	6-7' TALL

GRASS LEGEND

SYMBOL	BOTANICAL NAME/COMMON NAME	QTY	SIZE
	HEMEROCALLIS 'STELLA D'ORO' STELLA D'ORO DAYLILY*	29	1 GAL.
	HEMEROCALLIS X 'ROSY RETURNS' ROSY RETURNS DAYLILY*	113	1 GAL.

SHRUB LEGEND

SYMBOL	BOTANICAL NAME/COMMON NAME	QTY	SIZE
	CALAMAGROSTIS ACUTIFLORA 'KARL FOERSTER' FEATHER REED GRASS*	32	1 GAL.
	HELICTOTRICHON SEMPERVIRENS 'SAPPHIRE' BLUE OAT AVENA GRASS*	82	1 GAL.

SYMBOL	BOTANICAL NAME/COMMON NAME	QTY	SIZE
	ARCTOSTAPHYLOS UVA URSI 'MASSACHUSETTS' MASSACHUSETTS KINNIKINNICK	43	5 GAL.
	BUDDLEIA X 'FLUTTERBY PETITE' DWARF BUTTERFLY BUSH*	104	5 GAL.
	CERCOCARPUS INTRICATUS LITTLELEAF MOUNTAIN MAHOGANY*	27	5 GAL.
	FORSYTHIA X 'COURTASOL' GOLD TIDE FORSYTHIA	21	5 GAL.
	HIBISCUS SYRIACUS 'ANTONG TWO' LIL' KIM ROSE OF SHARON	13	5 GAL.
	PHYSOCARPUS OPULIFOLIUS 'LITTLE DEVIL' LITTLE DEVIL NINEBARK*	56	5 GAL.
	PINUS MUGO 'SLOWMOUND' SLOWMOUND MUGO PINE*	22	5 GAL.
	PRUNUS BESSEYI 'PAWNEE BUTTES' PAWNEE BUTTES SAND CHERRY*	77	5 GAL.
	RHUS AROMATICA 'GRO-LOW' GRO LOW SUMAC*	39	5 GAL.
	ROSA X 'WEKSCHNEEKOPPE' SNOW PAVEMENT RUGOSA SHRUB ROSES*	60	5 GAL.
	RIBES ALPINUM 'GREEN MOUND' GREEN MOUND CURRANT	45	5 GAL.
	SPIRAEA JAPONICA 'MAGIC CARPET' MAGIC CARPET SPIREA	20	5 GAL.
	SYMPHORICARPOS X CHENAULTII 'HANCOCK' HANCOCK CORALBERRY* (LOW-SPREADING)	11	5 GAL.

GROUNDCOVERS LEGEND

SYMBOL	BOTANICAL NAME/COMMON NAME	QTY	SIZE
	ROCK MULCH TO BE 3/4" - 1" SIZE 'SOUTHTOWN' CRUSHED ROCK FROM UTAH LANDSCAPE ROCK IN NEPHI, UTAH. IMPLEMENT IN AREA SHOWN AT A 3" DEPTH OVER WEED BARRIER FABRIC.	PER PLAN	PER PLAN
RM	ROCK MULCH TO BE 2" - 4" SIZE 'OAK CREEK PLUM' COBBLE ROCK FROM UTAH LANDSCAPE ROCK IN NEPHI, UTAH. IMPLEMENT IN AREA SHOWN AT A 6" DEPTH OVER WEED BARRIER FABRIC.	PER PLAN	PER PLAN
	DESERT SAGE BLUEGRASS FROM CHANSHARE SOD FARMS. INSTALL PER SOD LAYING NOTES	SOD ROLLS	SOD ROLLS
	DECORATIVE LANDSCAPE BOULDERS SIZE: 2', 3' AND 4' BOULDERS (MATCH/COMPLIMENT DECORATIVE ROCK MULCH IN PLANTING AREAS)	PER PLAN	PER PLAN

In Site DESIGN GROUP
Landscape Architecture Land Planning
17 North 470 West American Fork, Utah 84003
801.756.5043 www.in-sitedesigngroup.com

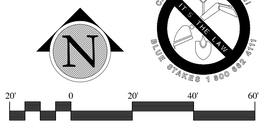

SCALE: 1"=20'-0" ON 30X42 SHEET

bhd ARCHITECTS
www.bhdarchitects.com
Phone 801.571.0010
Fax 801.571.0303
Toll Free 888.571.0010
65 East Wadsworth Park Drive
Suite 205 Draper, Utah 84020

LICENSED LANDSCAPE ARCHITECT # 4884514 Cory B. Whiting 8-15-2024 STATE OF UTAH

THE CHURCH OF JESUS CHRIST OF LATTER-DAY SAINTS

Orem YSA 3rd 10 Ward Building
Orem UT YSA 3rd Stake

Approx. 1700 West 575 South
Vineyard, Utah 84059

Owner #: 950-1876
Plan Series: 2024 10 Ward SC
County Parcel: 37:220:0001
BID #: 2344
Date: 15 Aug 2024

Drawing Issue and Revision Schedule

#	Date	Description
1	15 Aug 2024	Bid Documents
2	27 Aug 2024	Addendum #1
3	14 OCT 2024	Addendum #2

LANDSCAPE PLAN

LS102

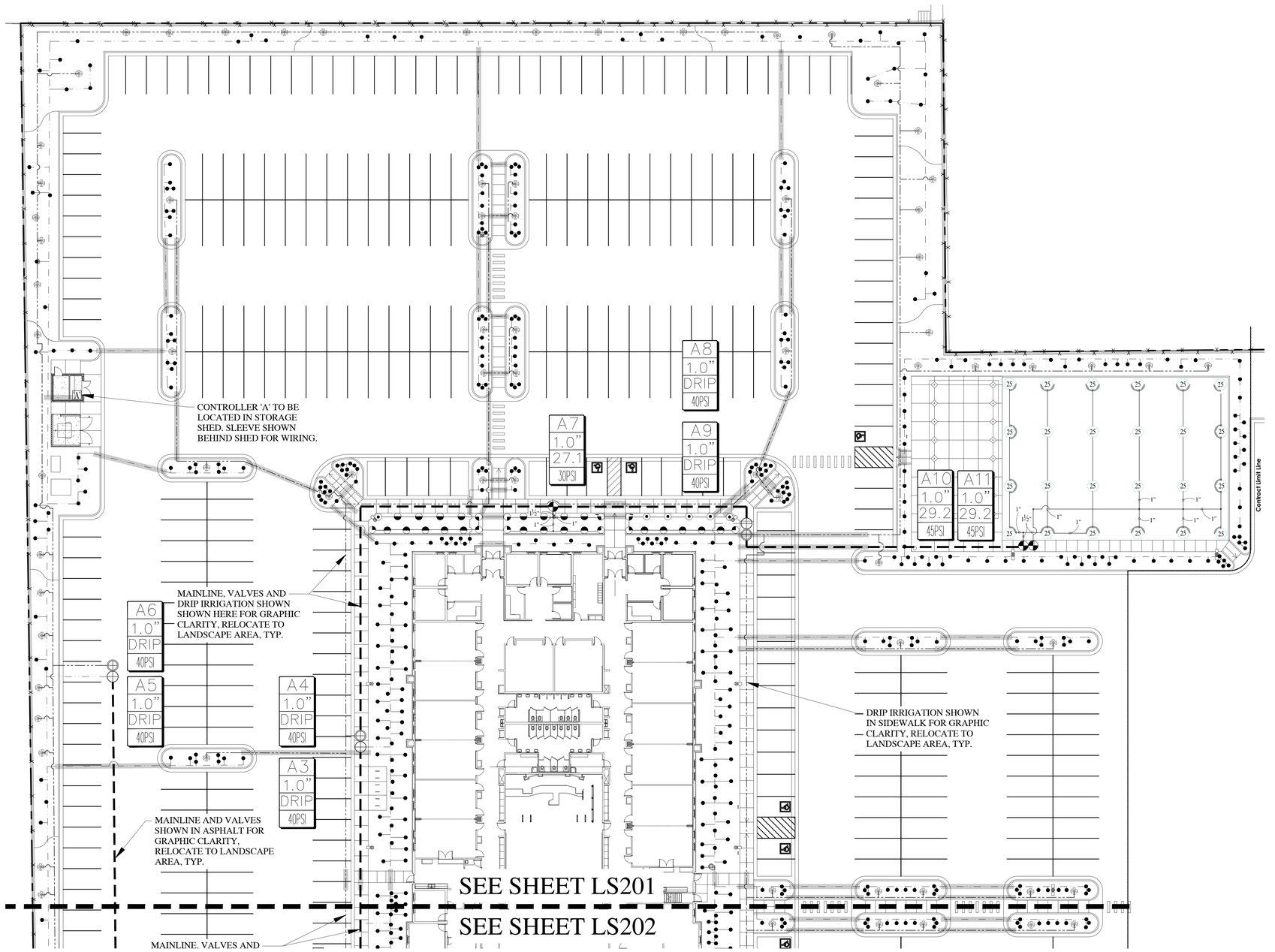

IRRIGATION LEGEND

SYMBOL	MANUFACTURER-MODEL NUMBER	PAT.	RD.	PSI	GPM Q	T	H	TT	TQ	F	DRIP GPH	DETAILS	REMARKS
●	RAINBIRD XB-PC	FULL	--	40	--	--	--	--	--	--	2.0	18	SEE LEGEND BELOW FOR
[RB]	DRIPLINE: NETAFIM TLCV-09-12	FULL	--	40	--	--	--	--	--	--	.9/12"	15-17	ADDITIONAL INFORMATION
▲	RAIN BIRD 1806-P45 POP-UP ROTARY 18	FULL	13' - 18'	45	.5	--	--	--	--	1.85	--	20-21	ADJUST NOZZLES AS
◆	RAIN BIRD 1806-P45 POP-UP ROTARY 24	Q,H,F	17' - 24'	45	.84	--	1.68	--	--	3.48	--	20-21	NEEDED TO KEEP WATER
■	RAINBIRD 1806-PRS POP-UP W/10 SERIES NOZZLE	Q,T,H	10'	30	.39	.67	.79	--	--	--	--	20-21	OFF SIDEWALK, ASPHALT
●	RAIN BIRD 5006-PL-R-SS 25 SERIES MPR NOZZLES	Q,H,F	25'	45	1.00	--	1.98	--	--	3.82	--	22-22	AND BUILDING.
'A'	CONTROLLER: WEATHERTRAK ET PRO3 (WTPRO3-C-12-CWM)											5-7	COORDINATE LOCATION WITH OWNER
◉	1" RAINBIRD QUICK COUPLER VALVE, MODEL 44-LRC											10	IN 10" RND. VALVE BOX
⊠	1-1/2" WILKENS 375B RPZ BACKFLOW PREVENTOR IN GUARDSHACK ENCLOSURE											4,11	IN STRONGBOX ENCLOSURE
⊠	REMOTE CONTROL VALVE: RAINBIRD PEB-PRS-D AUTOMATIC CONTROL VALVE; SIZE PER PLAN											13	JUMBO VALVE BOX
⊞	DRIP CONTROL ZONE KIT: RAINBIRD XCZ-100-PRB-COM PER PLANS											14	JUMBO VALVE BOX
⊞	DRIP CONTROL ZONE KIT: RAINBIRD XCZ-100-PRB-COM PER PLANS (FOR TREES)											14	JUMBO VALVE BOX
⋈	1-1/2" STOP & WASTE TO BE INSTALLED BY GENERAL CONTRACTOR. SEE CIVIL DRAWINGS.											4,11	BY GENERAL CONTRACTOR
⊙	HYDROMETER: NETAFIM LHM15TG1-MEL (WITH PE-39 FLOW SENSOR CABLE PER WEATHERTRAK SPECS.)											4,9,11	REFERENCE DETAILS
⊗	DRAIN VALVE: GRACO WELD TOP											5, 7	REFERENCE DETAILS
▬▬	MAINLINE: 1-1/2" SCH 40 PVC											1, 2	REFERENCE DETAILS
———	LATERAL LINE FOR ROTORS AND/OR SPRAYS: SCHEDULE 40 PVC											1, 2	REFERENCE DETAILS
— — —	TREE DRIP LATERAL LINE (SIZE AS REQUIRED) SCHEDULE 40 PVC											1,2,15,17-18	REFERENCE DETAILS
— — —	SHRUB DRIP LATERAL LINE (SIZE AS REQUIRED) SCHEDULE 40 PVC											1,2,15,17-18	REFERENCE DETAILS
	SLEEVE (SIZE TO MIN. 2X DIA. OF PIPE WITHIN THE SLEEVE). ADD ADDITIONAL SLEEVES AS REQ.											3	REFERENCE DETAILS
NOT SHOWN	WIRE CHASE, SIZE TO BE TWICE THE DIA. OF THE WIRE BUNDLE WITHIN DOWN TO 1" DIA. MIN.											1,2	REFERENCE DETAILS
NOT SHOWN	14 GAUGE SOLID COPPER SINGLE STRAND WIRE.											1,2	REFERENCE DETAILS

DRIP EMITTER LEGEND

PLANT TYPE	EMITTER QTY	EMITTER TYPE
PERENNIALS/GRASSES	1	XB-20 (2GPH)
ALL SHRUBS	1	XB-20 (2GPH)
TREES IN PLANTER AREAS	1	XB-10 (1GPH)

NOTE:
1. EMITTERS LISTED ARE AVAILABLE FROM GPH AND RAINBIRD.
2. EMITTERS ARE NOT NECESSARY FOR TREES IN LAWN AREAS.
3. INSTALL NETAFIM TLCV IN ADDITION TO XB-10 EMITTERS PER DETAILS ON SHEET LS402.

VALVE ID TAG

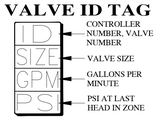

IRRIGATION NOTES

1. ALL WORK SHALL BE IN ACCORDANCE WITH APPLICABLE CITY AND/OR COUNTY CODES. THE CONTRACTOR SHALL APPLY AND PAY FOR ALL NECESSARY PERMITS.
2. CONTRACTOR SHALL HAVE ALL UTILITIES BLUE STAKED BEFORE DIGGING. ANY DAMAGE TO THE UTILITIES SHALL BE REPAIRED AT THE EXPENSE OF CONTRACTOR WITH NO EXTRA COST TO THE OWNER.
3. PROVIDE AN AS-BUILT, REPRODUCIBLE DRAWING TO OWNER SHOWING ALL DRAINS, HEADS, VALVES, AND PIPES. PROVIDE INSTRUCTIONS TO MAINTENANCE PERSONNEL FOR WINTERIZATION. SPRINKLER SYSTEM TO BE BLOWN OUT WITH AN AIR COMPRESSOR EACH FALL.
4. CONTRACTOR IS RESPONSIBLE FOR ENSURING ACCURATE COUNTS AND QUANTITIES OF ALL IRRIGATION MATERIALS FOR BIDDING AND INSTALLATION PURPOSES.
5. CONTRACTOR SHALL BUILD IRRIGATION SYSTEM WITH HEAD TO HEAD COVERAGE FOR ALL LAWN AREAS. HE-VAN AND/OR U-SERIES NOZZLES SHALL BE USED WHERE NECESSARY TO PROVIDED HEAD TO HEAD COVERAGE AND/OR TO MINIMIZE OVER SPRAY ONTO STREETS, SIDEWALKS AND/OR BUILDINGS.
6. LANDSCAPE CONTRACTOR (L.C.) SHALL PROVIDE AND INSTALL SLEEVES FOR ALL PIPES AND WIRES UNDER PAVEMENT AND SIDEWALKS. SLEEVES SHALL BE 2 SIZES LARGER THAN PIPE INSIDE. ALL WIRE SHALL BE IN SEPARATE SLEEVES (NOT SHOWN). PLACE JUNCTION BOXES WHERE NECESSARY TO MINIMIZE LONG RUNS OR AT DIRECTIONAL CHANGES AS NECESSARY.
7. ALL SLEEVES INSTALLED SHALL BE DUCT TAPED TO PREVENT DIRT OR OTHER DEBRIS ENTERING PIPE. ALL SLEEVES SHALL BE IDENTIFIED BY WOOD OR PVC STAKES AND BE SPRAY PAINTED WITH MARKING PAINT. REMOVE STAKES ONCE IRRIGATION SYSTEM IS COMPLETE.
8. MAIN LINE SHALL BE 1.5" (UNLESS OTHERWISE DIRECTED), LATERAL LINES SHALL BE NO SMALLER THAN 1". PIPES SHALL CARRY NO MORE THAN THE FOLLOWING: 1" PIPE MAX. 13 GPM, 1-1/2" PIPE MAX. 30 GPM. ADJUST LOCATION OF MAINLINE AND LATERAL LINES AS NECESSARY IN ORDER TO AVOID PLACING BOULDERS, TREES AND SHRUBS DIRECTLY OVER MAINLINE AND LATERAL LINES.
9. MAIN LINES SHALL BE 18" DEEP MIN. AND LATERAL LINES 12" DEEP MIN. NO ROCK GREATER THAN 3/4" DIAMETER SHALL BE ALLOWED IN TRENCHES.
10. PLACE PIPES, VALVE BOXES AND ALL OTHER SPRINKLER CONSTRUCTION IN LANDSCAPE AREAS. ALL PIPES SHALL BE ON PROPERTY OF OWNER. MODIFY LOCATION OF VALVE BOXES AS NECESSARY IN ORDER TO AVOID TREES AND SHRUBS PER PLANTING PLAN. USE GREEN BOXES IN LAWN AREAS. USE TAN BOXES IN BED AREAS.
11. LANDSCAPE ARCHITECT SHALL VISUALLY INSPECT ALL TRENCHES PRIOR TO BACKFILLING. CONTRACTOR SHALL GIVE LANDSCAPE ARCHITECT MIN. 72 HR. NOTICE BEFORE INSPECTION IS TO BE MADE. CONTRACTOR SHALL PRESSURE TEST MAINLINE FOR LEAKS PRIOR TO BACKFILLING.
12. ALL SPRINKLERS SHALL BE ADJUSTED ON-SITE AS NECESSARY TO AVOID ANY WATER SPRAYING ONTO STREETS, SIDEWALKS AND/OR BUILDINGS.
13. ACTUAL INSTALLATION OF IRRIGATION SYSTEM MAY VARY SOMEWHAT FROM PLANS. CONTRACTOR IS RESPONSIBLE TO MAKE NECESSARY ADJUSTMENTS TO ENSURE PROPER COVERAGE OF ALL LANDSCAPED AREAS.
14. LANDSCAPE CONTRACTOR SHALL MATCH PRECIPITATION RATES AS MUCH AS POSSIBLE FOR ALL LANDSCAPED AREAS.
15. INSTALL ALL HEADS 2" AWAY FROM ALL WALKS AND WALLS. VALVE BOXES SHALL BE INSTALLED SQUARED TO AND 6" MIN. AWAY FROM WALKS AND WALLS.
16. CONTRACTOR TO INSTALL NETAFIM TECHLINE CV TUBING ON SURFACE DRIP LINE FOR TREES.
17. POWER TO CONTROLLER TO BE PROVIDED BY ELECTRICAL CONTRACTOR. OWNER TO SPECIFY EXACT LOCATION OF CONTROLLER. IF MOUNTED OUTSIDE, CONTROLLER TO BE MOUNTED IN WEATHERPROOF LOCKING WALL MOUNTED CABINET PER MANUFACTURERS INSTRUCTIONS. LANDSCAPE CONTRACTOR SHALL ENSURE THE CONTROLLER IS GROUNDED PER LOCAL CODE AND PER MANUFACTURER SPEC.
18. IF THE STATIC PRESSURE AT THE POINT OF CONNECTION EXCEEDS 100 PSI, INSTALL A BRASS PRESSURE REDUCER IN-LINE WITH THE RPZ PER MANUFACTURER SPECS. INSTALL THE RPZ AND PRESSURE REDUCER IN A LOCKING METAL CABINET. ADJUST PRESSURE AS REQUIRED FOR NORMAL OPERATION OF THE IRRIGATION SYSTEM.
19. VALVE CONTROL WIRING SHALL BE 14 GAUGE COPPER SINGLE STRAND WIRE. WIRE SHALL BE WHITE FOR COMMON AND COLOR FOR CONTROL.
20. INSTALL THE PRS-D OPTION FOR SPRAY VALVES IF THE STATIC PRESSURE AT SPRAY HEADS EXCEEDS 70 PSI. INSTALL THE PRS-D OPTION FOR ROTOR VALVES IF THE STATIC PRESSURE AT ROTOR EXCEEDS 75 PSI.

In Site DESIGN GROUP
Landscape Architecture Land Planning
17 North 470 West American Fork, Utah 84003
801.756.5043 www.in-sitedesigngroup.com

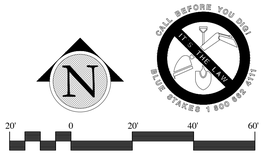

SCALE: 1"=20'-0" ON 30X42 SHEET

bhd ARCHITECTS
www.bhdarchitects.com
Phone 801.571.0010
Fax 801.571.0303
Toll Free 888.571.0010
65 East Wadsworth Park Drive
Suite 205 Draper, Utah 84020



THE CHURCH OF JESUS CHRIST OF LATTER-DAY SAINTS

Orem YSA 3rd 10 Ward Building
Orem UT YSA 3rd Stake

Approx. 1700 West 575 South
Vineyard Utah 84059

Date: 15 Aug 2024
BID #: 2244
County Parcel: 37:228:0001
Plan Series: 2020 10 Ward SC
Owner #: 590-10-6

Drawing Issue and Revision Schedule											
	Description										
1	15 Aug 2024	Bid Documents									
2	27 Aug 2024	Addendum #1									
3	14 Oct 2024	Addendum #2									

IRRIGATION PLAN

LS201

Printed: 14-Oct-2024 5:07 PM

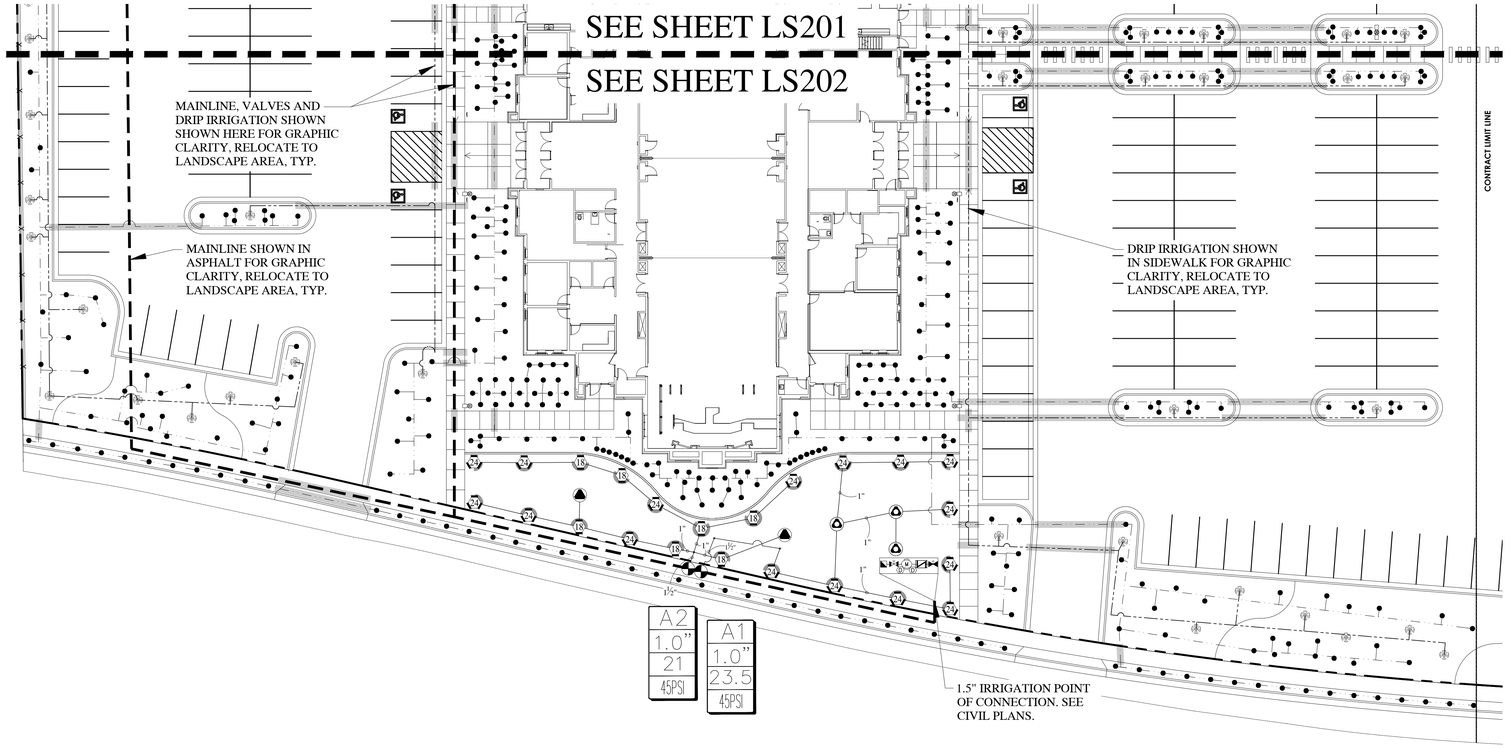

IRRIGATION NOTES

1. ALL WORK SHALL BE IN ACCORDANCE WITH APPLICABLE CITY AND/OR COUNTY CODES. THE CONTRACTOR SHALL APPLY AND PAY FOR ALL NECESSARY PERMITS.
2. CONTRACTOR SHALL HAVE ALL UTILITIES BLUE STAKED BEFORE DIGGING. ANY DAMAGE TO THE UTILITIES SHALL BE REPAIRED AT THE EXPENSE OF CONTRACTOR WITH NO EXTRA COST TO THE OWNER.
3. PROVIDE AN AS-BUILT, REPRODUCIBLE DRAWING TO OWNER SHOWING ALL DRAINS, HEADS, VALVES, AND PIPES. PROVIDE INSTRUCTIONS TO MAINTENANCE PERSONNEL FOR WINTERIZATION. SPRINKLER SYSTEM TO BE BLOWN OUT WITH AN AIR COMPRESSOR EACH FALL.
4. CONTRACTOR IS RESPONSIBLE FOR ENSURING ACCURATE COUNTS AND QUANTITIES OF ALL IRRIGATION MATERIALS FOR BIDDING AND INSTALLATION PURPOSES.
5. CONTRACTOR SHALL BUILD IRRIGATION SYSTEM WITH HEAD TO HEAD COVERAGE FOR ALL LAWN AREAS. HE-VAN AND/OR U-SERIES NOZZLES SHALL BE USED WHERE NECESSARY TO PROVIDED HEAD TO HEAD COVERAGE AND/OR TO MINIMIZE OVER SPRAY ONTO STREETS, SIDEWALKS AND/OR BUILDINGS.
6. LANDSCAPE CONTRACTOR (L.C.) SHALL PROVIDE AND INSTALL SLEEVES FOR ALL PIPES AND WIRES UNDER PAVEMENT AND SIDEWALKS. SLEEVES SHALL BE 2 SIZES LARGER THAN PIPE INSIDE. ALL WIRE SHALL BE IN SEPARATE SLEEVES (NOT SHOWN). PLACE JUNCTION BOXES WHERE NECESSARY TO MINIMIZE LONG RUNS OR AT DIRECTIONAL CHANGES AS NECESSARY.
7. ALL SLEEVES INSTALLED SHALL BE DUCT TAPED TO PREVENT DIRT OR OTHER DEBRIS ENTERING PIPE. ALL SLEEVES SHALL BE IDENTIFIED BY WOOD OR PVC STAKES AND BE SPRAY PAINTED WITH MARKING PAINT. REMOVE STAKES ONCE IRRIGATION SYSTEM IS COMPLETE.
8. MAIN LINE SHALL BE 1.5" (UNLESS OTHERWISE DIRECTED). LATERAL LINES SHALL BE NO SMALLER THAN 1". PIPES SHALL CARRY NO MORE THAN THE FOLLOWING: 1" PIPE MAX. 13 GPM, 1-1/2" PIPE MAX. 30 GPM. ADJUST LOCATION OF MAINLINE AND LATERAL LINES AS NECESSARY IN ORDER TO AVOID PLACING BOULDERS, TREES AND SHRUBS DIRECTLY OVER MAINLINE AND LATERAL LINES.
9. MAIN LINES SHALL BE 18" DEEP MIN. AND LATERAL LINES 12" DEEP MIN. NO ROCK GREATER THAN 3/4" DIAMETER SHALL BE ALLOWED IN TRENCHES.
10. PLACE PIPES, VALVE BOXES AND ALL OTHER SPRINKLER CONSTRUCTION IN LANDSCAPE AREAS. ALL PIPES SHALL BE ON PROPERTY OF OWNER. MODIFY LOCATION OF VALVE BOXES AS NECESSARY IN ORDER TO AVOID TREES AND SHRUBS PER PLANTING PLAN. USE GREEN BOXES IN LAWN AREAS. USE TAN BOXES IN BED AREAS.
11. LANDSCAPE ARCHITECT SHALL VISUALLY INSPECT ALL TRENCHES PRIOR TO BACKFILLING. CONTRACTOR SHALL GIVE LANDSCAPE ARCHITECT MIN. 72 HR. NOTICE BEFORE INSPECTION IS TO BE MADE. CONTRACTOR SHALL PRESSURE TEST MAINLINE FOR LEAKS PRIOR TO BACKFILLING.
12. ALL SPRINKLERS SHALL BE ADJUSTED ON-SITE AS NECESSARY TO AVOID ANY WATER SPRAYING ONTO STREETS, SIDEWALKS AND/OR BUILDINGS.
13. ACTUAL INSTALLATION OF IRRIGATION SYSTEM MAY VARY SOMEWHAT FROM PLANS. CONTRACTOR IS RESPONSIBLE TO MAKE NECESSARY ADJUSTMENTS TO ENSURE PROPER COVERAGE OF ALL LANDSCAPED AREAS.
14. LANDSCAPE CONTRACTOR SHALL MATCH PRECIPITATION RATES AS MUCH AS POSSIBLE FOR ALL LANDSCAPED AREAS.
15. INSTALL ALL HEADS 2" AWAY FROM ALL WALKS AND WALLS. VALVE BOXES SHALL BE INSTALLED SQUARED TO AND 6" MIN. AWAY FROM WALKS AND WALLS.
16. CONTRACTOR TO INSTALL NETAFIM TECHLINE CV TUBING ON-SURFACE DRIP LINE FOR TREES.
17. POWER TO CONTROLLER TO BE PROVIDED BY ELECTRICAL CONTRACTOR. OWNER TO SPECIFY EXACT LOCATION OF CONTROLLER. IF MOUNTED OUTSIDE, CONTROLLER TO BE MOUNTED IN WEATHERPROOF LOCKING WALL MOUNTED CABINET PER MANUFACTURERS INSTRUCTIONS. LANDSCAPE CONTRACTOR SHALL ENSURE THE CONTROLLER IS GROUNDED PER LOCAL CODE AND PER MANUFACTURER SPEC.
18. IF THE STATIC PRESSURE AT THE POINT OF CONNECTION EXCEEDS 100 PSI, INSTALL A BRASS PRESSURE REDUCER IN-LINE WITH THE RPZ PER MANUFACTURER SPECS. INSTALL THE RPZ AND PRESSURE REDUCER IN A LOCKING METAL CABINET. ADJUST PRESSURE AS REQUIRED FOR NORMAL OPERATION OF THE IRRIGATION SYSTEM.
19. VALVE CONTROL WIRING SHALL BE 14 GAUGE COPPER SINGLE STRAND WIRE. WIRE SHALL BE WHITE FOR COMMON AND COLOR FOR CONTROL.
20. INSTALL THE PRS-D OPTION FOR SPRAY VALVES IF THE STATIC PRESSURE AT SPRAY HEADS EXCEEDS 70 PSI. INSTALL THE PRS-D OPTION FOR ROTOR VALVES IF THE STATIC PRESSURE AT ROTOR EXCEEDS 75 PSI.

IRRIGATION LEGEND

SYMBOL	MANUFACTURER-MODEL NUMBER	PAT.	RD.	PSI	GPM Q	T	H	TT	TQ	F	DRIP GPH	DETAILS	REMARKS
●	RAINBIRD XB-PC	FULL	--	40	--	--	--	--	--	--	2.0	18	SEE LEGEND BELOW FOR
	DRIPLINE: NETAFIM TLCV-09-12	FULL	--	40	--	--	--	--	--	--	.9/12"	15-17	ADDITIONAL INFORMATION.
	RAIN BIRD 1806-P4S POP-UP ROTARY 18	FULL	13' - 18'	45	.5	--	--	--	--	1.85	--	20-21	ADJUST NOZZLES AS
	RAIN BIRD 1806-P4S POP-UP ROTARY 24	Q,H,F	17' - 24'	45	.84	--	1.68	--	--	3.48	--	20-21	NEEDED TO KEEP WATER
	RAINBIRD 1806-PRS POP-UP W/10 SERIES NOZZLE	Q,T,H	10'	30	.39	.67	.79	--	--	--	--	20-21	OFF SIDEWALK, ASPHALT
	RAIN BIRD 5006-PL-R-SS 25 SERIES MPR NOZZLES	Q,H,F	25'	45	1.00	--	1.98	--	--	3.82	--	22-22	AND BUILDING.
A1	CONTROLLER: WEATHERTRAK ET PRO3 (WTPRO3-C-12-CWM)											5-7	COORDINATE LOCATION WITH OWNER
	1" RAINBIRD QUICK COUPLER VALVE, MODEL 44-LRC											10	IN 10" RND. VALVE BOX
	1-1/2" WILKENS 375B RPZ BACKFLOW PREVENTOR IN GUARDSHACK ENCLOSURE											4,11	IN STRONGBOX ENCLOSURE
	REMOTE CONTROL VALVE: RAINBIRD PEB-PRS-D AUTOMATIC CONTROL VALVE; SIZE PER PLAN											13	JUMBO VALVE BOX
	DRIP CONTROL ZONE KIT: RAINBIRD XCZ-100-PRB-COM PER PLANS											14	JUMBO VALVE BOX
	DRIP CONTROL ZONE KIT: RAINBIRD XCZ-100-PRB-COM PER PLANS (FOR TREES)											14	JUMBO VALVE BOX
	1-1/2" STOP & WASTE TO BE INSTALLED BY GENERAL CONTRACTOR. SEE CIVIL DRAWINGS.											4,11	BY GENERAL CONTRACTOR
	HYDROMETER: NETAFIM LHM15TG1-MEL (WITH PE-39 FLOW SENSOR CABLE PER WEATHERTRAK SPECS.)											4,9,11	REFERENCE DETAILS
	DRAIN VALVE: GRACO WELD TOP											5, 7	REFERENCE DETAILS
	MAINLINE: 1-1/2" SCH 40 PVC											1, 2	REFERENCE DETAILS
	LATERAL LINE FOR ROTORS AND/OR SPRAYS: SCHEDULE 40 PVC											1, 2	REFERENCE DETAILS
	TREE DRIP LATERAL LINE (SIZE AS REQUIRED) SCHEDULE 40 PVC											1,2,15,17-18	REFERENCE DETAILS
	SHRUB DRIP LATERAL LINE (SIZE AS REQUIRED) SCHEDULE 40 PVC											1,2,15,17-18	REFERENCE DETAILS
	SLEEVE (SIZE TO MIN. 2X DIA. OF PIPE WITHIN THE SLEEVE). ADD ADDITIONAL SLEEVES AS REQ.											3	REFERENCE DETAILS
NOT SHOWN	WIRE CHASE. SIZE TO BE TWICE THE DIA. OF THE WIRE BUNDLE WITHIN DOWN TO 1" DIA. MIN.											1,2	REFERENCE DETAILS
NOT SHOWN	14 GAUGE SOLID COPPER SINGLE STRAND WIRE.											1,2	REFERENCE DETAILS

DRIP EMITTER LEGEND

PLANT TYPE:	EMITTER QTY	EMITTER TYPE:
PERENNIALS/GRASSES	1	XB-20 (2GPH)
ALL SHRUBS	1	XB-20 (2GPH)
TREES IN PLANTER AREAS	1	XB-10 (1GPH)

NOTE:
1. EMITTERS LISTED ARE AVAILABLE FROM GPH AND RAINBIRD.
2. EMITTERS ARE NOT NECESSARY FOR TREES IN LAWN AREAS.
3. INSTALL NETAFIM TLCV IN ADDITION TO XB-10 EMITTERS PER DETAILS ON SHEET LS402.

VALVE ID TAG

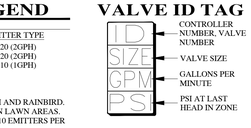

In Site DESIGN GROUP
Landscape Architecture Land Planning
17 North 470 West American Fork, Utah 84003
801.756.5043 www.insitedesigngroup.com

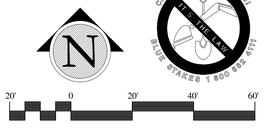

SCALE: 1"=20'-0" ON 30X42 SHEET

bhd ARCHITECTS
www.bhdarchitects.com
Phone 801.571.0010
Fax 801.571.0303
Toll Free 888.571.0010
65 East Wadsworth Park Drive
Suite 205 Draper, Utah 84020

LICENSED LANDSCAPE ARCHITECT # 4884514 Cory B. Whiting 8-15-2024 STATE OF UTAH

THE CHURCH OF JESUS CHRIST OF LATTER-DAY SAINTS

Orem YSA 3rd 10 Ward Building
Orem UT YSA 3rd Stake
Approx. 1700 West 575 South
Vineyard, Utah 84059

Date: 15 Aug 2024
BID #: 2244
County Parcel: 37:220:0001
Plan Series: 2024 10 Ward SC
Owner #: 390-1876

Drawing Issue and Revision Schedule

#	Date	Description
1	15 Aug 2024	Bid Documents
2	27 Aug 2024	Addendum #1
3	14 OCT 2024	Addendum #2

IRRIGATION PLAN

LS202

Printed: 14-Oct-2024 5:07 PM

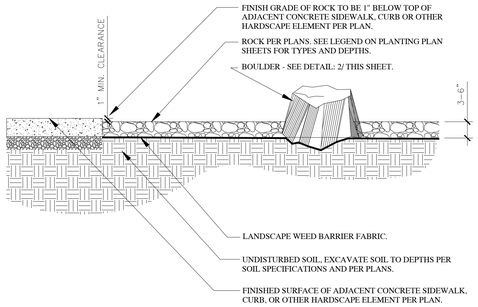

NOTES:
1. ROCK SHALL BE SCREENED & DOUBLE WASHED AND BE FREE OF DEBRIS PRIOR TO INSTALLATION. IF ROCK SUPPLIER DOES NOT HAVE A WASH PLANT, THE LANDSCAPE CONTRACTOR SHALL STILL BE RESPONSIBLE FOR DOUBLE WASHING ALL ROCK AND BOULDERS PRIOR TO INSTALLATION.
2. INSTALL PRE-EMERGENT HERBICIDE TO THE TOP OF THE FABRIC AFTER INSTALLING PLANTS AND PRIOR TO INSTALLING MULCH. AFTER INSTALLATION OF THE MULCH THE CONTRACTOR SHALL EVENLY BROADCAST A SECOND APPLICATION OF SLOW-RELEASE PRE-EMERGENT HERBICIDE. APPLY PRE-EMERGENT HERBICIDE PER MANUFACTURERS RECOMMENDATIONS.
3. KEEP TOP OF ROCK 1"-1½" BELOW ADJACENT WALKS AND CURBS. DO NOT ALLOW ROCK TO TOUCH THE TRUNK OF ANY PLANT. INSTALL ROCK AFTER INSTALLATION OF WEED BARRIER FABRIC AND PLANT MATERIAL.
4. CONTRACTOR TO ENSURE THAT TOP OF WEED BARRIER FABRIC IS FREE OF SOILS AND DEBRIS PRIOR TO PLACING ROCK.
5. SEE LANDSCAPE PLANS FOR ROCK TYPE AND DEPTH.

WEED FABRIC NOTE:
INSTALL 6" SOIL STAPLE IN WEED BARRIER FABRIC AT 5' O.C. TRIANGULAR SPACING. INSTALL 6" SOIL STAPLE AT 12" O.C. ALONG ALL WEED BARRIER FABRIC SEAMS. OVERLAP FABRIC MIN. OF 6" AT ALL SEAMS AS SHOWN BELOW. INSTALL SOIL STAPLE 6' O.C. ALONG EDGES & 2 AT EACH CORNER.

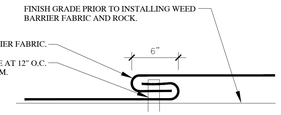

1 ROCK AND WEED BARRIER FABRIC WITH BOULDER
SCALE: NTS

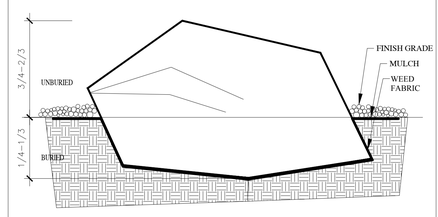

2 BOULDER PLACEMENT DETAIL
SCALE: NTS

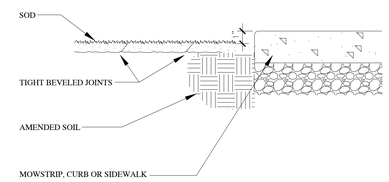

3 SOD INSTALLATION
SCALE: NTS

NOTES:
1. MOWSTRIP TO BE CAST-IN-PLACE AND POURED USING TYPICAL WEIGHT STRUCTURAL CONCRETE.
2. CONTRACTOR TO ENSURE POSITIVE DRAINAGE AROUND MOWSTRIPS-DO NOT CREATE A DAM EFFECT WITH PLACEMENT OF MOWSTRIP.
3. MAXIMUM 1/2" WIDTH VARIATION.
4. PRECISELY FOLLOW LAYOUT AS SHOWN ON MOWSTRIP/EDGING PLAN.

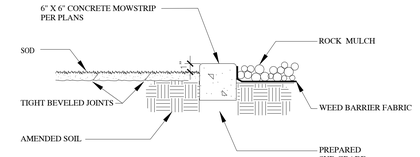

4 CONCRETE MOWSTRIP
SCALE: NTS

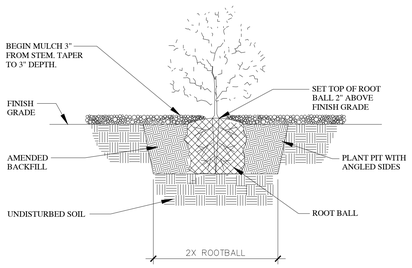

5 SHRUB PLANTING
SCALE: NTS

NOTE:
DO NOT USE ROCK MULCH IN LAWN AREAS.

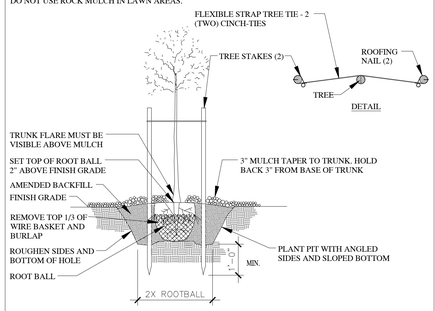

6 TREE PLANTING AND STAKING
SCALE: NTS

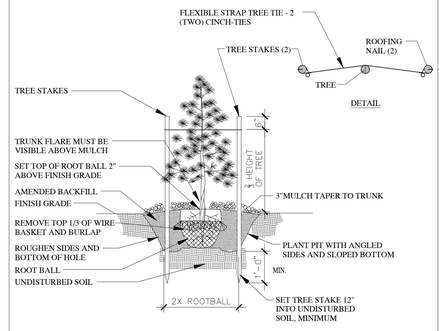

7 CONIFER PLANTING AND STAKING
SCALE: NTS

bhd ARCHITECTS
www.bhdarchitects.com
Phone 801.571.0010
Fax 801.571.0303
Toll Free 888.571.0010
65 East Wadsworth Park Drive
Suite 205 Draper, Utah 84020

LICENSED LANDSCAPE ARCHITECT # 4884514 Cory B. Whiting 8-15-2024 STATE OF UTAH

THE CHURCH OF JESUS CHRIST OF LATTER-DAY SAINTS

Orem YSA 3rd 10 Ward Building
Orem UT YSA 3rd Stake

Approx. 1700 West 575 South
Vineyard, Utah 84059

Date: 15 Aug 2024 | BHD #: 2244 | County Parcel: 37:220:0001 | Plan Series: 2024 10 Ward SC | Owner #: 3PS-1874

Drawing Issue and Revision Schedule

#	Date	Description
1	15 Aug 2024	Bid Documents
2	27 Aug 2024	Addendum #1
3	14 OCT 2024	Addendum #2

LANDSCAPE DETAILS

LS301

CALL BEFORE YOU DIG 811 BLUE STAKES 1 800 662 4111

In Site DESIGN GROUP
Landscape Architecture Land Planning
17 North 470 West American Fork, Utah 84003
801.756.5043 www.in-sitedesigngroup.com

Printed: 14 Oct 2024 5:07 PM

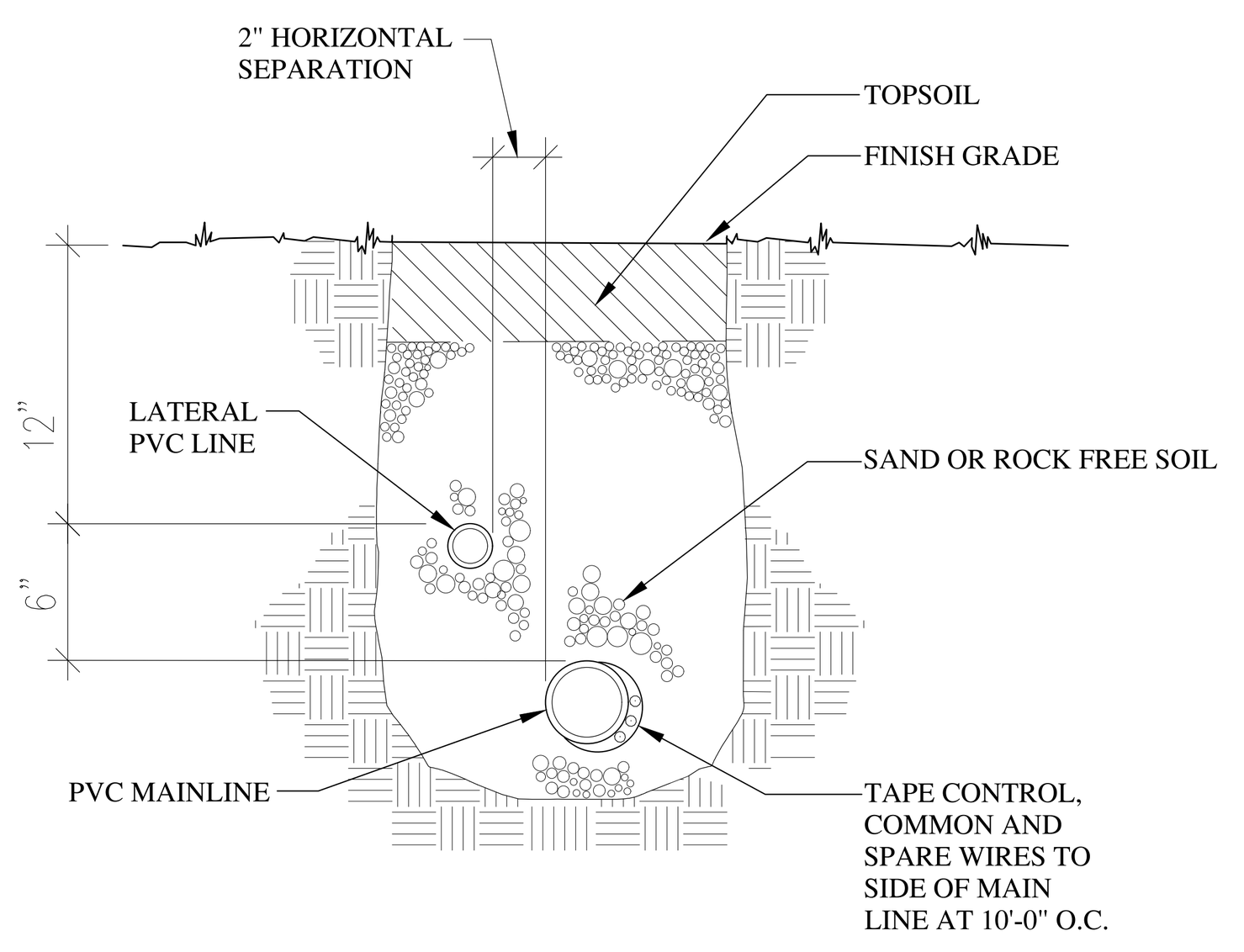

1 TRENCH SECTION - CONVENTIONAL WIRE SYS.

SCALE: NTS

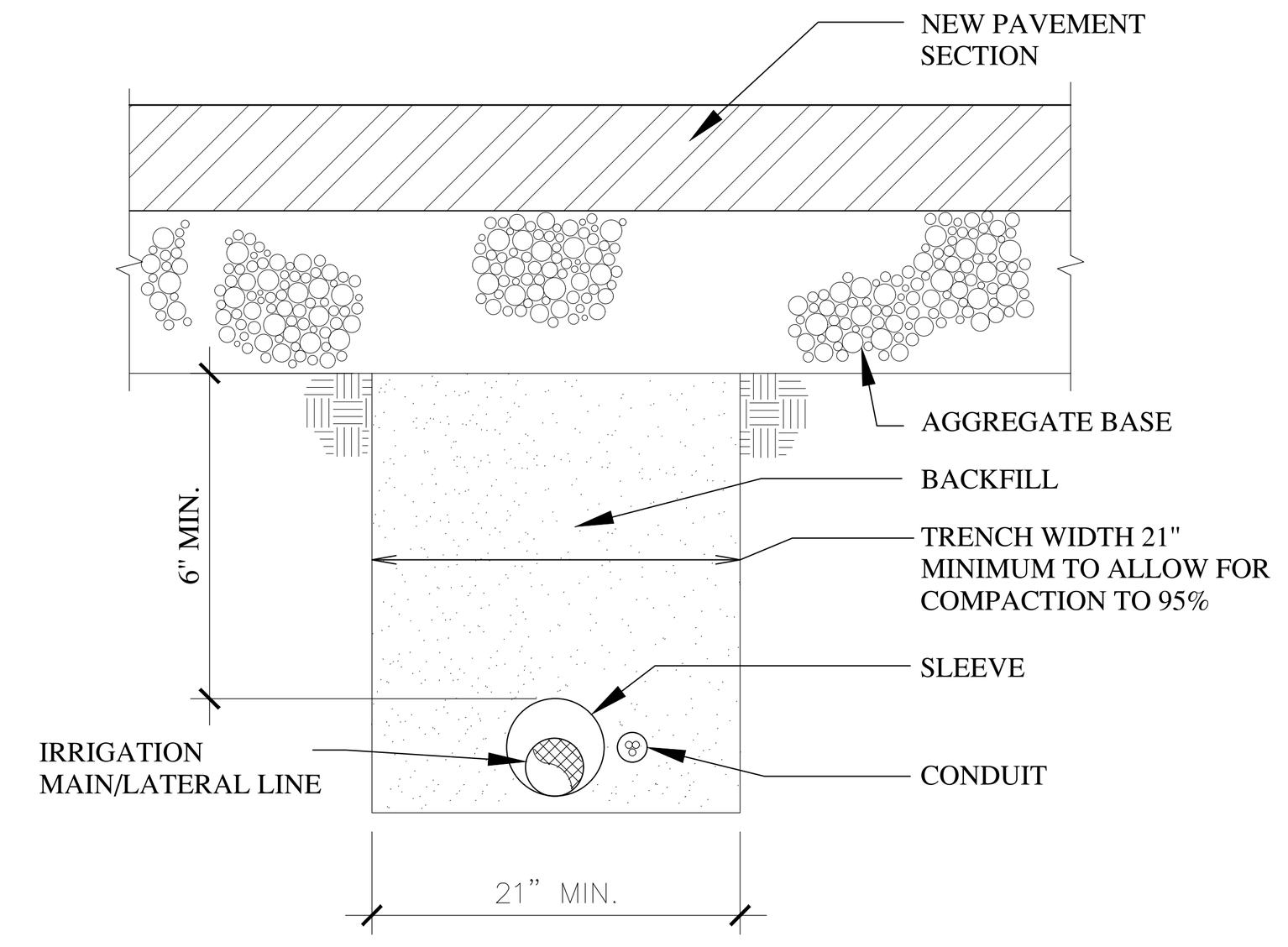

2 MISC. PIPE TRENCH: NEW PAVEMENT AREAS

SCALE: NTS

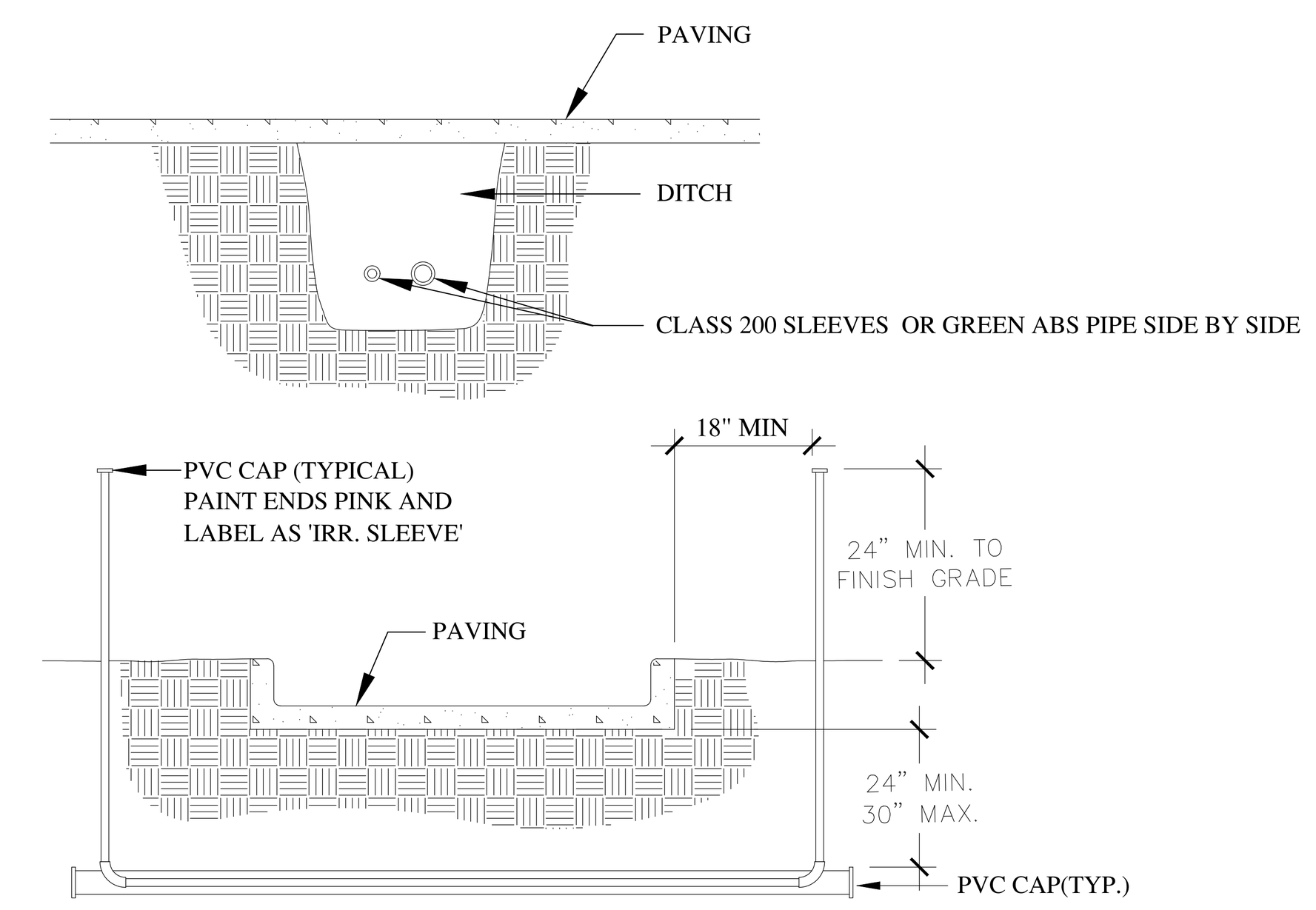

NOTE:

1. WHERE THERE IS MORE THAN ONE SLEEVE, EXTEND THE SMALLER SLEEVE TO 24-INCHES MINIMUM ABOVE FINISH GRADE.
2. ALL SLEEVES INSTALLED SHALL BE DUCT TAPED TO PREVENT DIRT OR OTHER DEBRIS ENTERING PIPE. ALL SLEEVES SHALL BE IDENTIFIED BY WOOD OR PVC STAKES AND BE SPRAY PAINTED WITH MARKING PAINT. REMOVE STAKES ONCE IRRIGATION SYSTEM IS COMPLETE.

3 SLEEVING

SCALE: NTS

NOTE:
INSTALL ISOLATION VALVE AFTER THE HYDROMETER AND BEFORE THE QUICK COUPLER. THE HYDROMETER IS TO BE DRAINED MANUALLY.

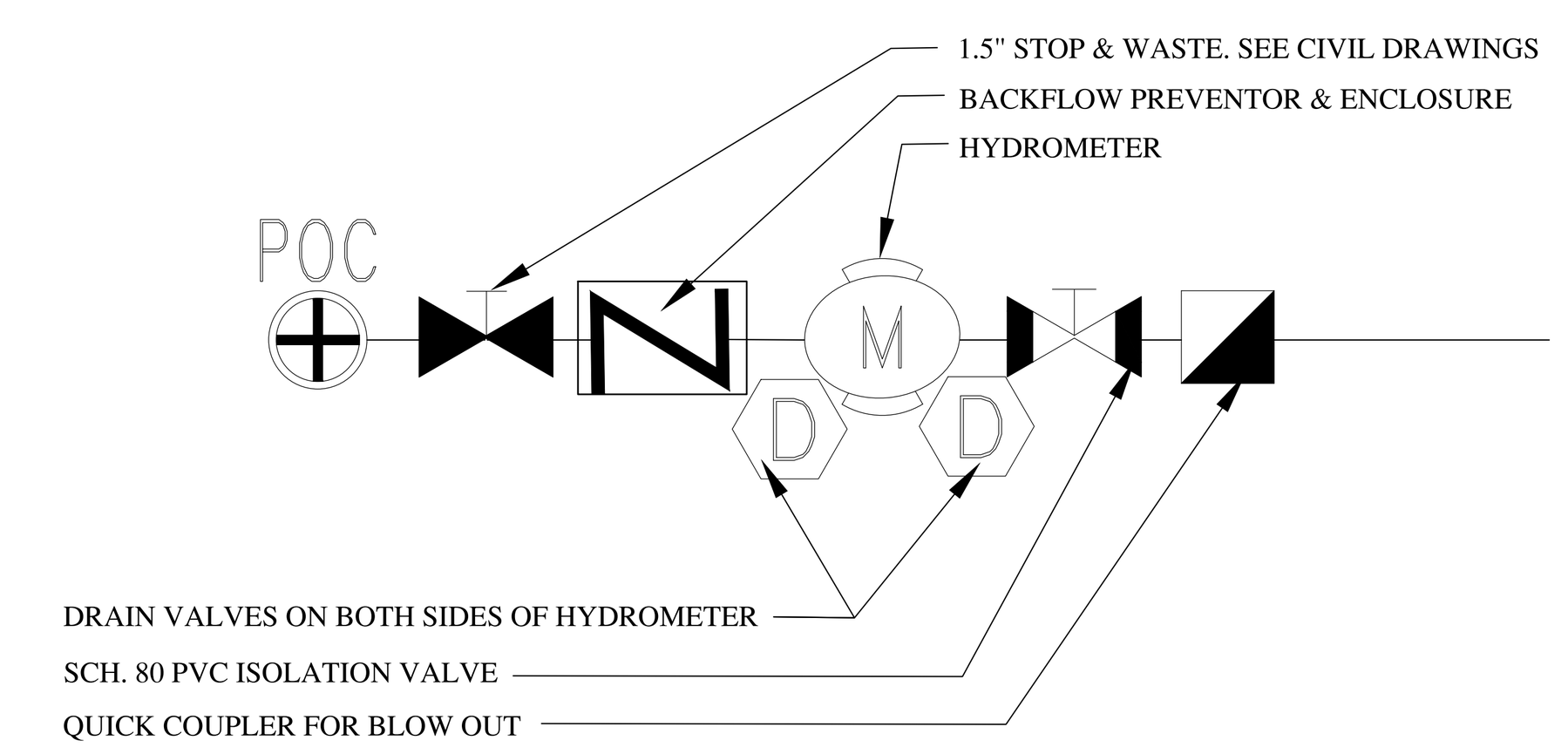

4 1.5" POC W/BACKFLOW SCHEMATIC LAYOUT

SCALE: NTS

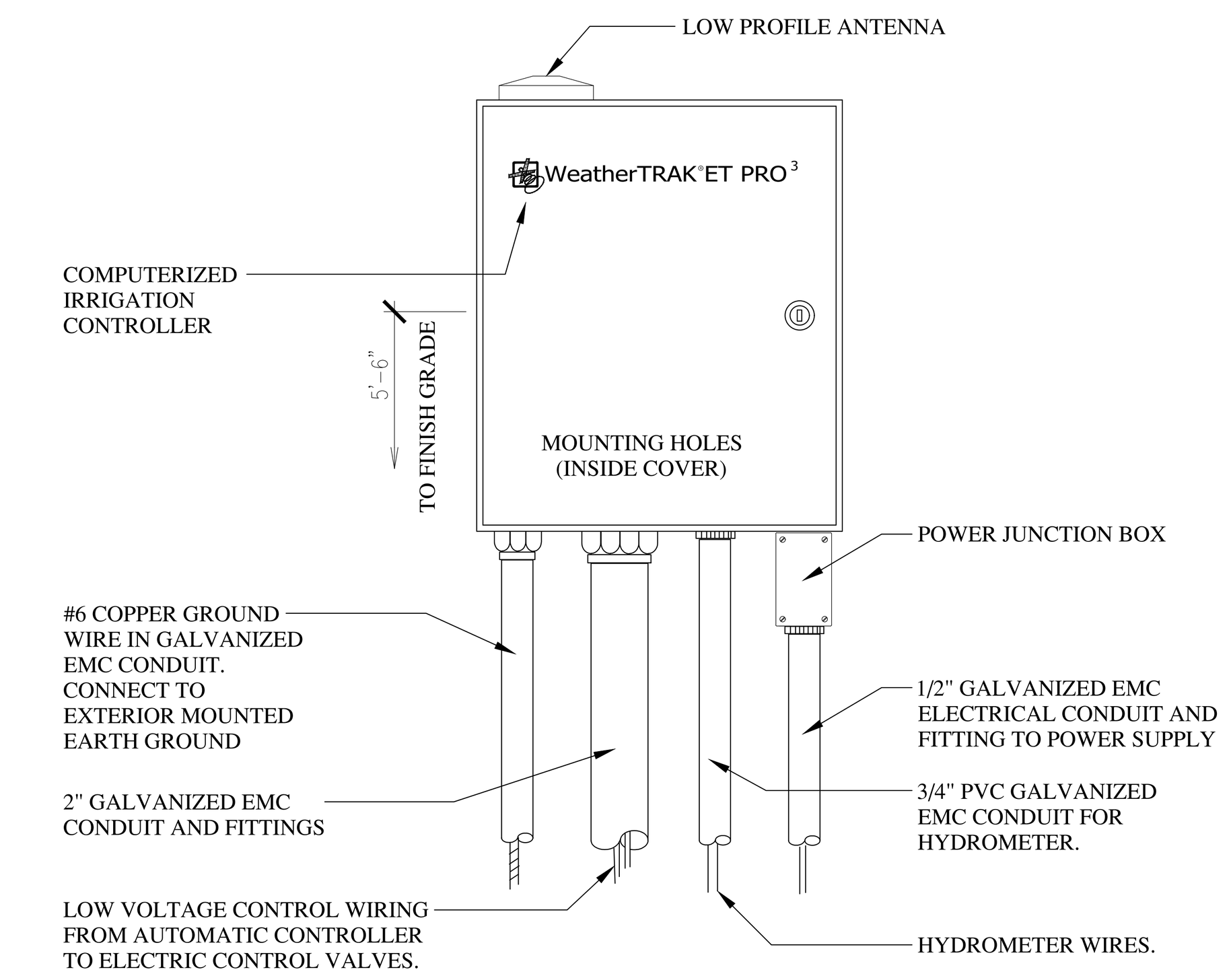

5 SMART CONTROLLER - WEATHER TRAK

SCALE: NTS

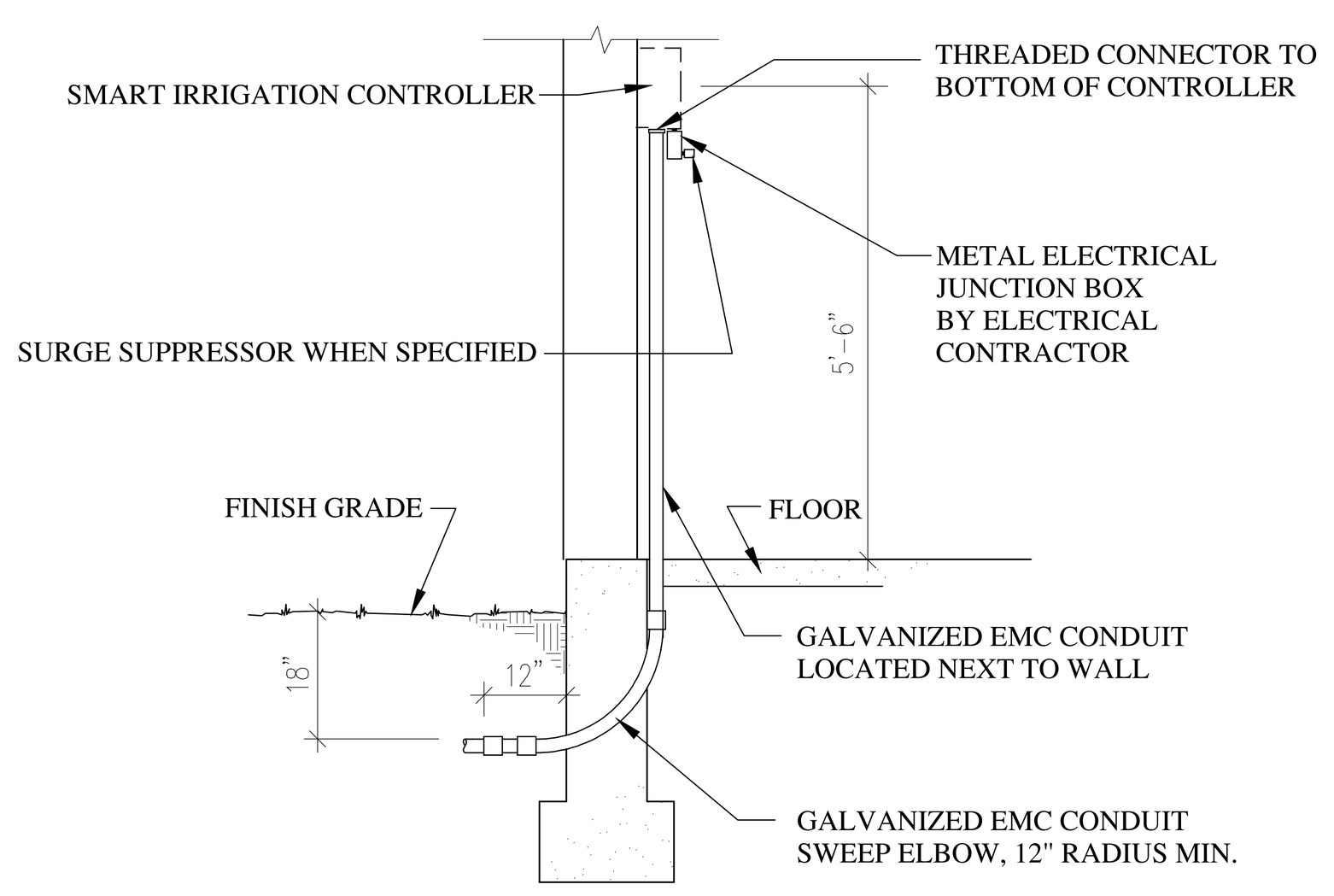

6 IRRIGATION CONTROLLER - INTERIOR MOUNT

SCALE: NTS

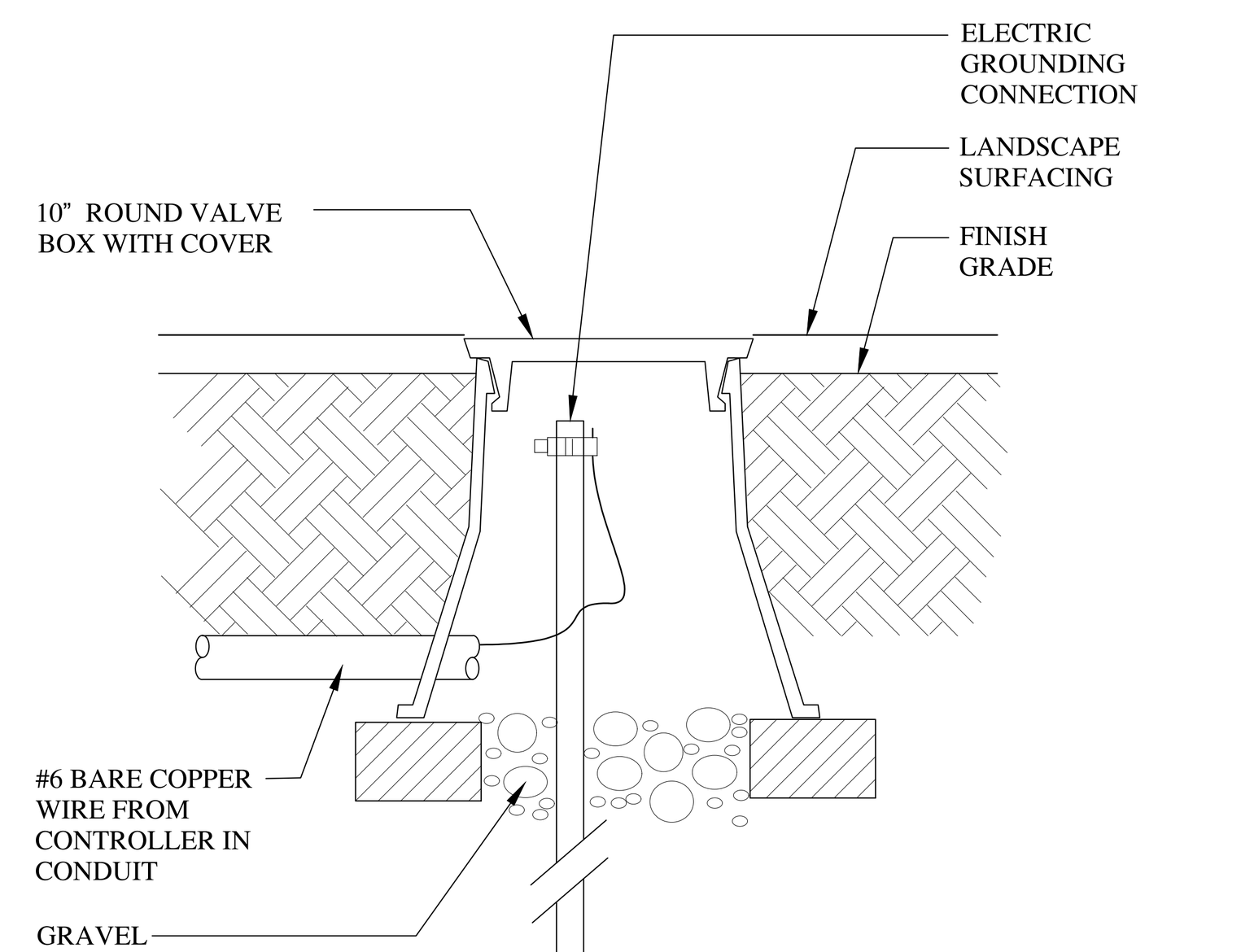

NOTE:

1. GROUNDING TO BE DONE BY ELECTRICAL CONTRACTOR.
2. SEE ELECTRICAL PLANS.

7 LIGHTNING GROUNDING ROD

SCALE: NTS

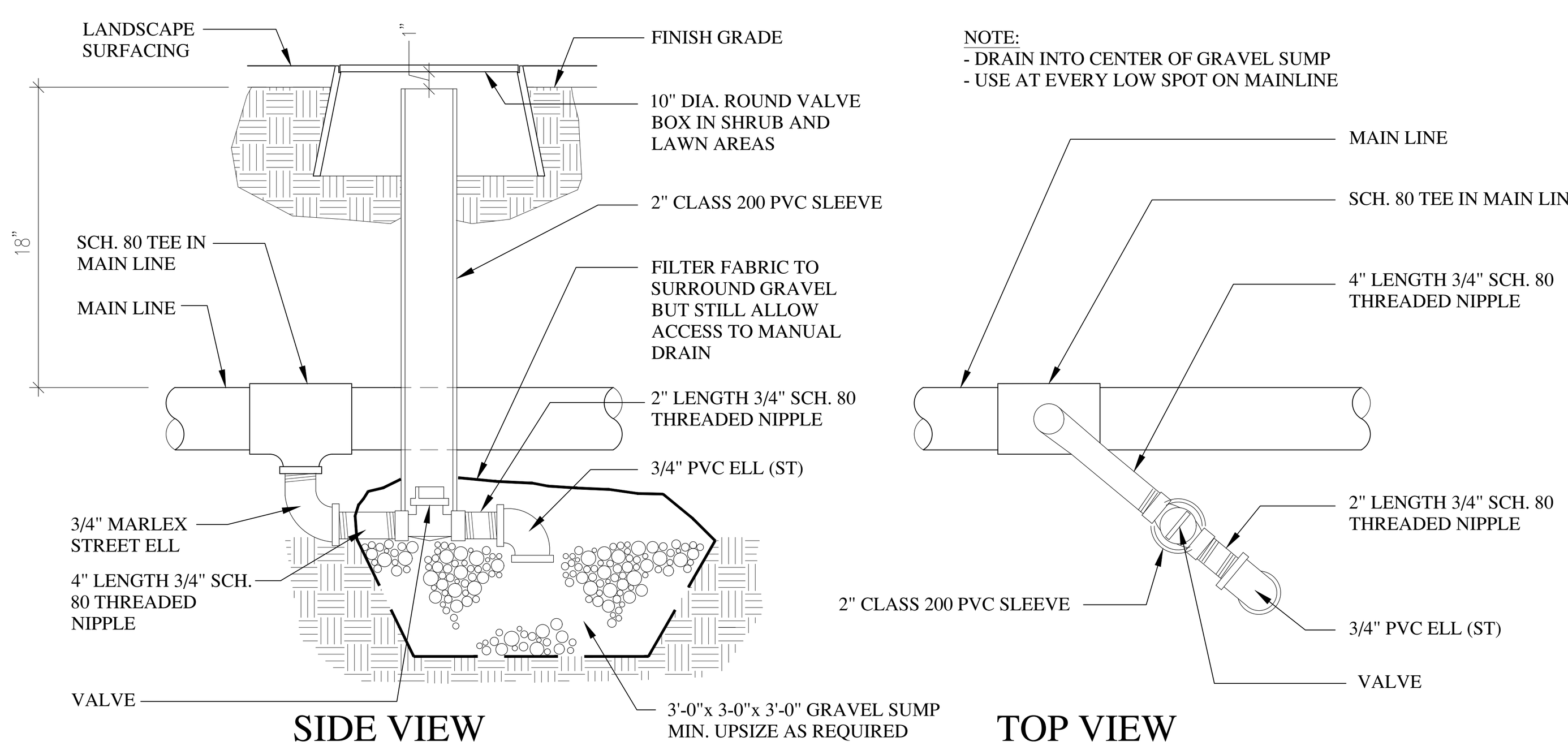

8 MAINLINE MANUAL DRAIN VALVE

SCALE: NTS

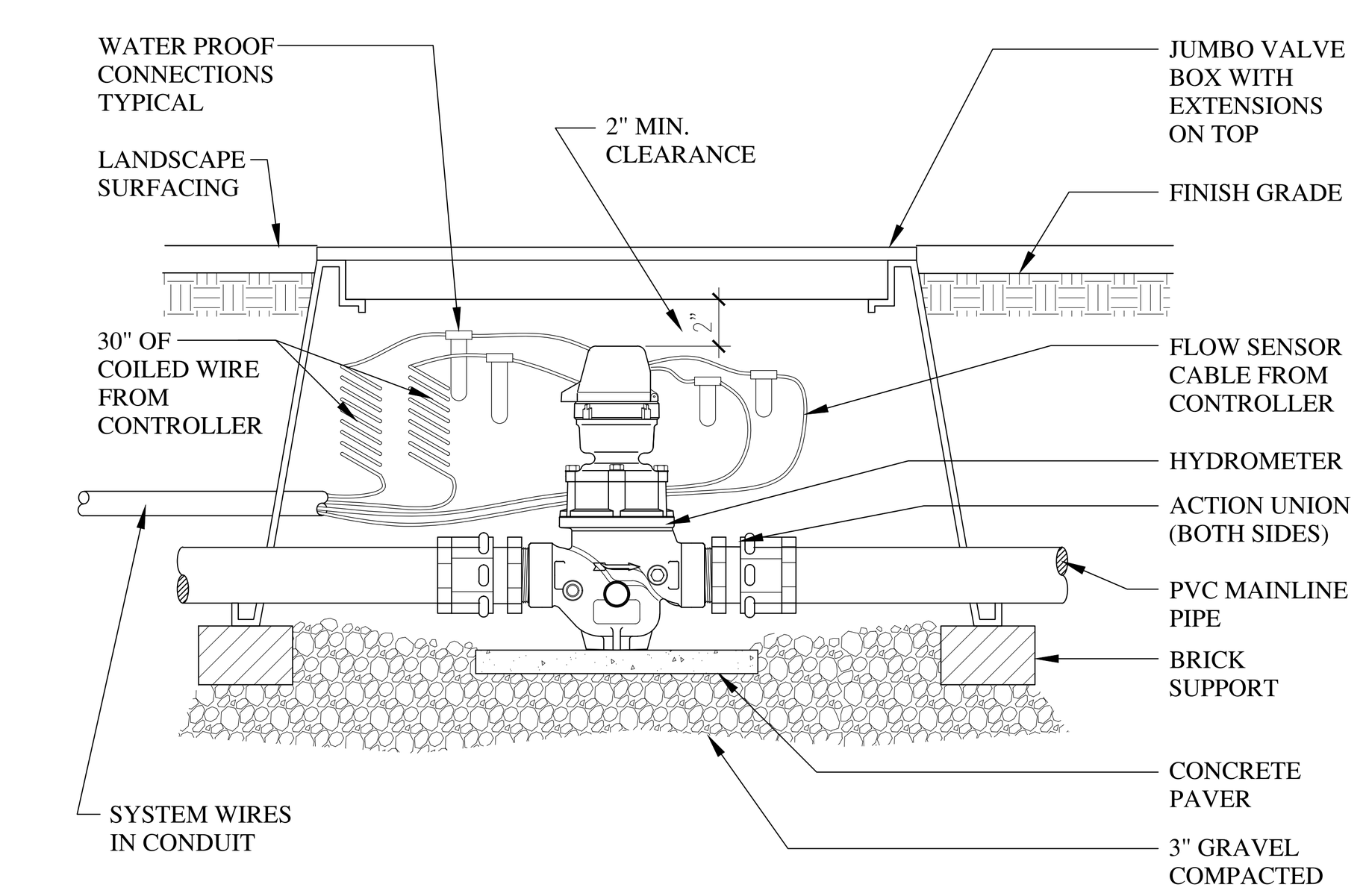

9 HYDROMETER

SCALE: NTS

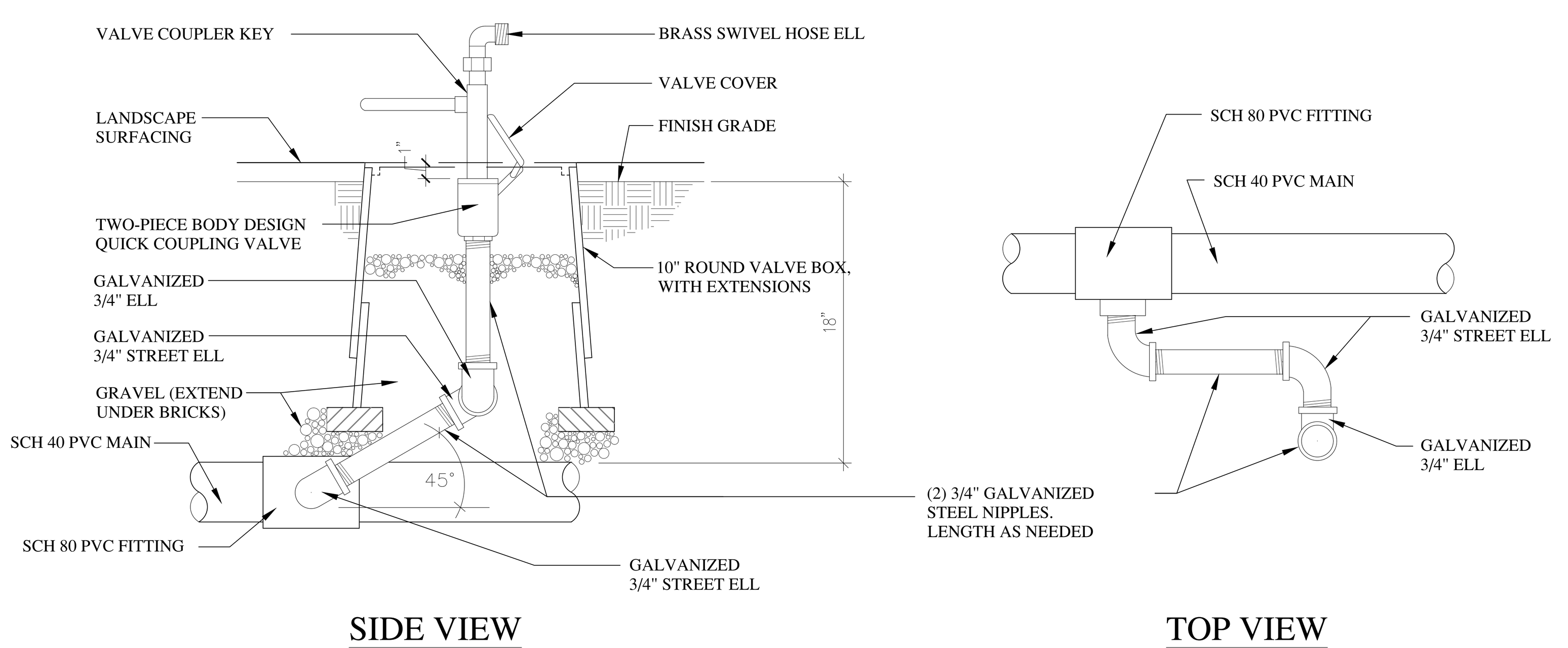

10 QUICK COUPLING VALVE

SCALE: NTS

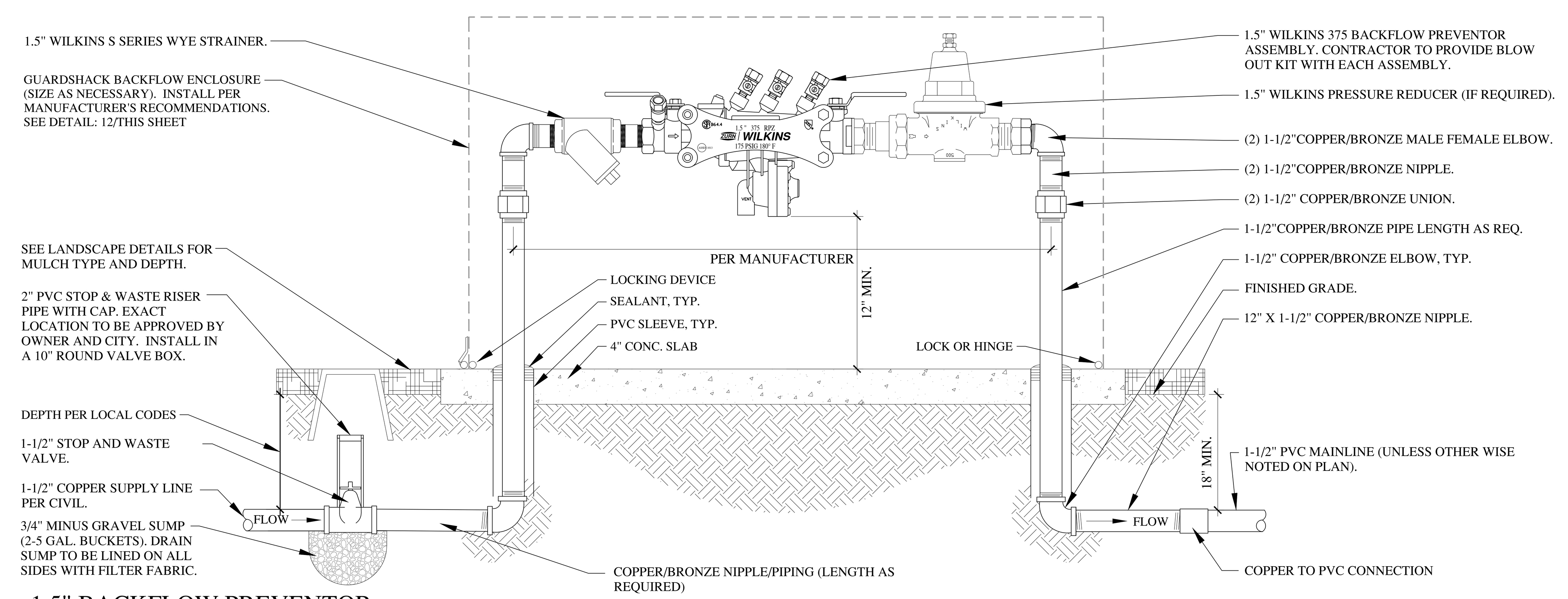

BACKFLOW PREVENTOR NOTES:

1. EQUIPMENT TO BE INSTALLED AT A MINIMUM OF 24" FROM ANY STRUCTURES OR HARDSCAPING.
2. WHEN UNIT IS NEXT TO STRUCTURE (i.e. WALL BUILDING, ETC.) MOUNT TEST COCKS ON SIDE AWAY FROM STRUCTURE.
3. PROVIDE OWNER WITH COMPLETE WRITTEN INSTRUCTIONS ON HOW TO DRAIN ENTIRE BACKFLOW UNIT TO PREVENT FREEZING. CONTRACTOR TO PROVIDE BLOW OUT KIT FROM MANUFACTURER.
4. CONTRACTOR SHALL PROVIDE ALL MATERIALS NECESSARY FOR PROPER RPZ INSTALLATION.
5. RPZ TO BE WINTERIZED AS NECESSARY TO PREVENT FREEZING. INSULATION IS REQUIRED TO PREVENT RPZ FROM FREEZING TEMPERATURES BEFORE SYSTEM IS BLOWN OUT FOR THE SEASON. CONTRACTOR SHALL INSTALL INSULATION BLANKET FOR RPZ.
6. WHERE CORROSION IS POSSIBLE, USE A DIELECTRIC UNION WHEREVER A COPPER-BASED METAL (COPPER, BRASS, BRONZE) IS JOINED TO AN IRON-BASED METAL (IRON, GALVANIZED STEEL, STAINLESS STEEL).
7. CONTRACTOR SHALL TEST WATER SUPPLY TO ENSURE THERE IS AT LEAST 90 PSI AND 23 GPM AVAILABLE AT THE POC PRIOR TO BEGINNING WORK ON THE SYSTEM.
8. PROVIDE DEDUCTIVE BID ALTERNATE TO REDUCE BACKFLOW, PRESSURE REDUCER AND Y STRAINER 1" VS. 1-1/2" WITH ASSOCIATED REDUCER FITTINGS.

11 1.5" BACKFLOW PREVENTOR

SCALE: NTS

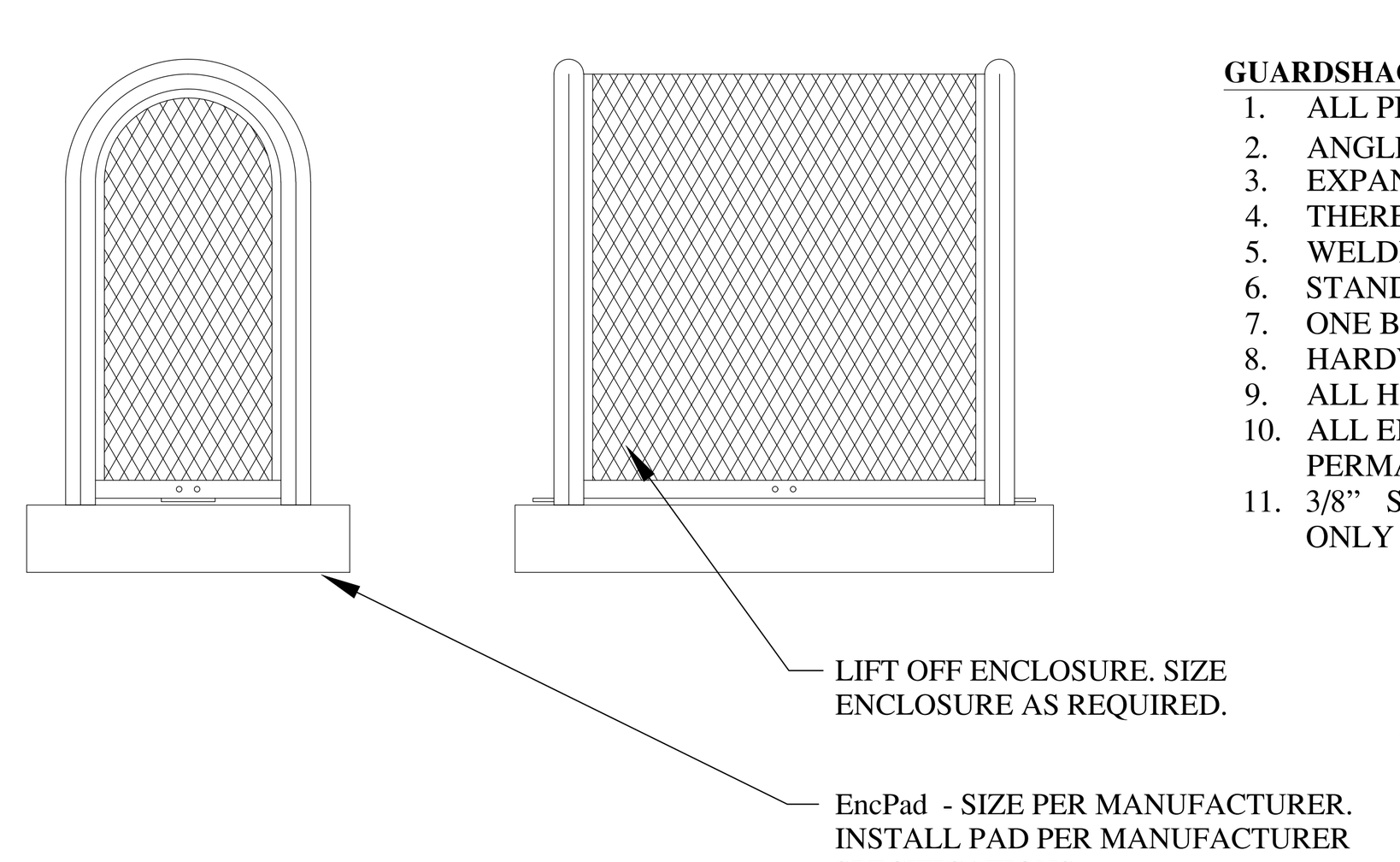

GUARDSHACK GENERAL SPECIFICATIONS

1. ALL PIPE SHALL BE 1 ¼" SCHEDULE 40 A.S.T.M. A-53 GRADE A- ELECTRIC WELD PIPE.
2. ANGLE IRON SHALL BE 1" X 1" X ⅛" STEEL.
3. EXPANDED METAL SHALL BE ½" SPACING X # 13 GA. FLATTENED DIAMOND PATTERN STEEL.
4. THERE SHALL BE NO EXPOSED ENDS OF EXPANDED METAL ON THE OUTSIDE OF THE ENCLOSURE.
5. WELDING SHALL BE A MINIMUM OF ¼" LONG WELDS ON 4" SPACING.
6. STANDARD MOUNTING BRACKETS SHALL BE WELDED ON EACH END OF LIFT OFF ENCLOSURES.
7. ONE BRACKET ON HINGED UNITS SHALL BE WELDED ON END OPPOSITE HINGES.
8. HARDWARE KITS PROVIDED FOR MOUNTING ENCLOSURES.
9. ALL HARDWARE SHALL BE SECURELY ATTACHED TO ENCLOSURES.
10. ALL ENCLOSURES SHALL WITHSTAND A MINIMUM OF 200 LBS. PER SQUARE FOOT WITHOUT ANY PERMANENT DEFLECTION OR DISTORTION.
11. 3/8" SPACING BETWEEN ANGLE IRON FRAMEWORK OF ENCLOSURE AND SLAB TO PREVENT RUSTING. ONLY PIPE ENDS TO TOUCH SLAB.

POWDER COATED UNITS

PRE-POWDERCOAT TREATMENT PROCESS
CLEAN GUARDSHACK UNIT WITH A S-44 ALKALINE CLEANER, OVERFLOW RINSE, APPLY AN AC-8115 IRON PHOSPHATE TREATMENT, OVERFLOW RINSE AND FINISH WITH A #198 SEALER RINSE TO PREVENT RUSTING AND IMPROVE ADHESION.

POWDER COAT TREATMENT PROCESS
UNITS SHALL BE PREHEATED AND COATED BY ELECTROSTATIC APPLICATION OF 2.0 TO 3.5 MIL THICKNESS ON ALL SURFACES. POWDER SHALL BE RAL 1019 WOODLANDS TAN OR TCI 8810-6058 FOREST GREEN OR APPROVED EQUAL IMPACT RESISTANCE FINISH 160 INCH POUNDS DIRECT 160 INCH POUNDS REVERSE, PER ASTM D-2794 SPECS. GLOSS FINISH >85, PER ASTM D-523. ADHESION TO BE RATED EXCELLENT WHEN TESTED TO ASTM D-3359 STANDARDS.

NOTE:

1. ENCLOSURE IS AVAILABLE THROUGH:
   BPDI-GUARDSHACK ENCLOSURES
   3831 E. GROVE STREET
   PHOENIX, ARIZONA 85040
   (602) 426-1002
2. CONTRACTOR TO PROVIDE A LOCK TO OWNER UPON INSTALLATION.
3. REFERENCE RPZ DETAIL FOR BACKFLOW INSTALLATION.
4. UPSIZE ENCLOSURE IF NECESSARY.
5. OWNER TO DETERMINE POWDER COAT COLOR PRIOR TO ORDERING UNIT.

12 STANDARD GUARD SHACK ENCLOSURE

SCALE: NTS

NOTES:

1. VALVE BOX TO REST ON (4) CMU BLOCKS (ONE FOR EACH SIDE).
2. CLUSTERED VALVE BOXES MAY SHARE A CMU BLOCK.

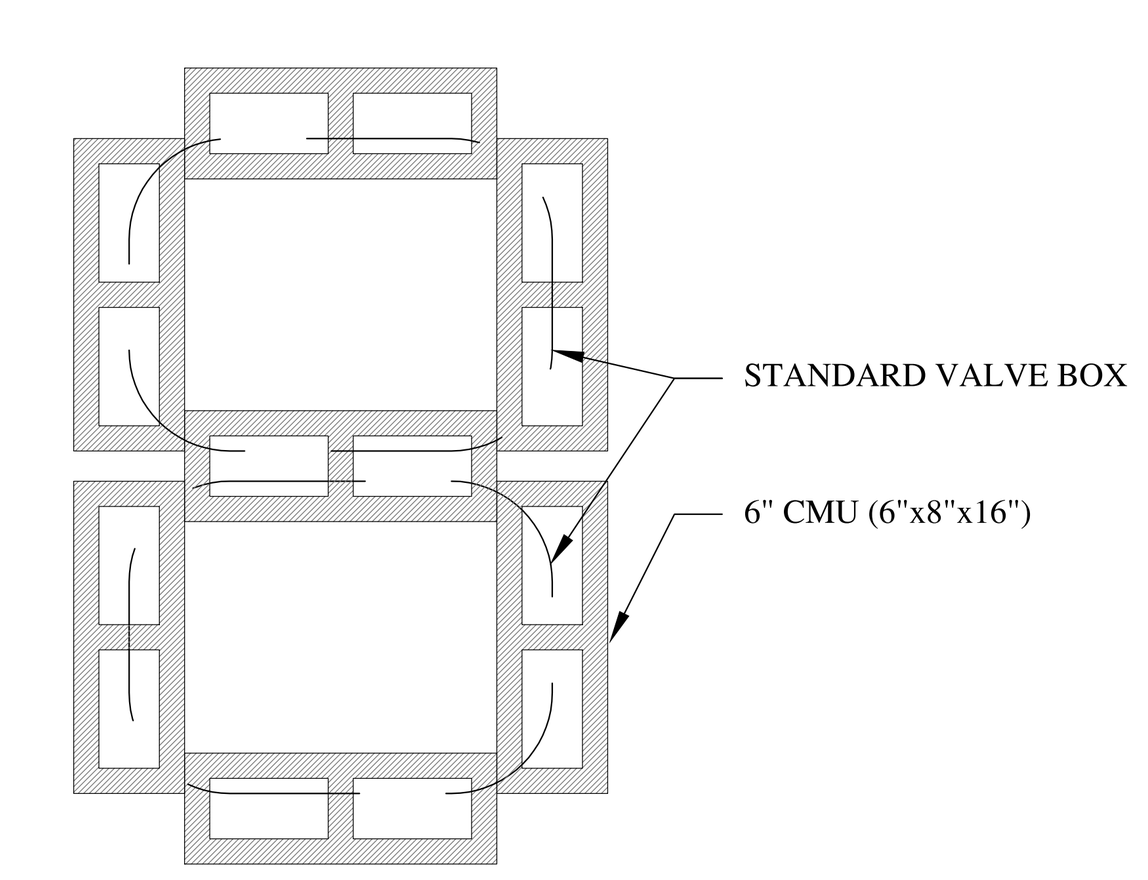

13 CMU PLACEMENT

SCALE: NTS

NOTES:
1. LIMIT 1 VALVE PER BOX.
2. 10" MIN. LATERAL LINE DEPTH AT VALVE BOX, 12" MIN. LATERAL LINE DEPTH EVERYWHERE ELSE.
3. PROVIDE MIN. 2" CLEARANCE BETWEEN WIRE AND CMU BLOCK.

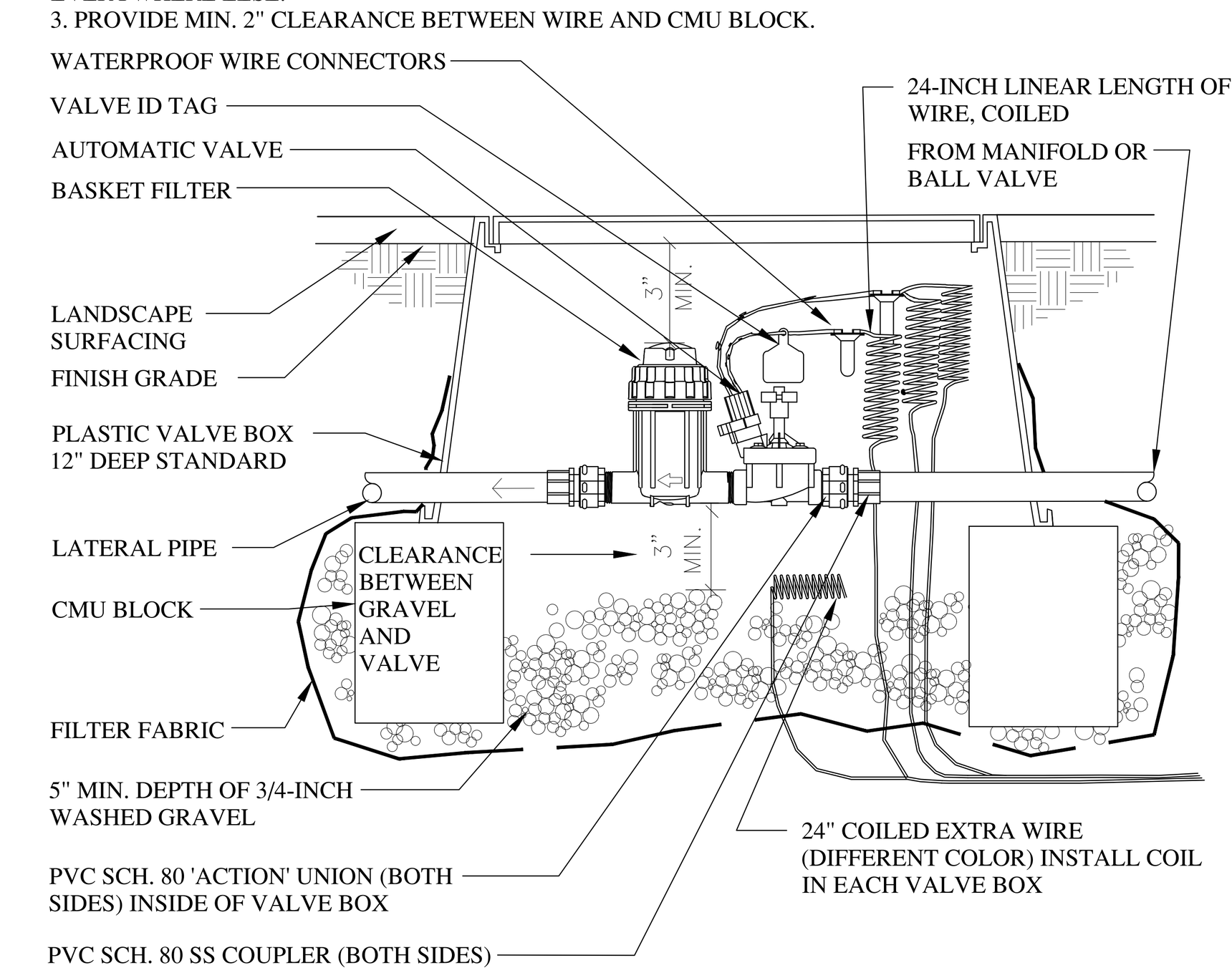

14 DRIP VALVE SECTION - CONVENTIONAL WIRE

SCALE: NTS

bhd ARCHITECTS
www.bhdarchitects.com
Phone 801.571.0010
Fax 801.571.0303
Toll Free 888.571.0010
65 East Wadsworth Park Drive
Suite 205 Draper, Utah 84020

LICENSED LANDSCAPE ARCHITECT # 4884514 Cory B. Whiting 8-15-2024 STATE OF UTAH

THE CHURCH OF JESUS CHRIST OF LATTER-DAY SAINTS

Orem YSA 3rd 10 Ward Building
Orem UT YSA 3rd Stake

Approx. 1700 West 575 South
Vineyard, Utah 84059

Date:	BHD #:	County Parcel:	Plan Series:	Owner #:
15 Aug 2024	2344	39:228:0001	2024 10 Ward SC	590-1876

Drawing Issue and Revision Schedule

#	Date	Description
1	15 Aug 2024	Bid Documents
2	27 Aug 2024	Addendum #1
3	14 OCT 2024	Addendum #2

In Site DESIGN GROUP
Landscape Architecture Land Planning
17 North 470 West American Fork, Utah 84003
801.756.5043 www.in-sitedesigngroup.com

IRRIGATION DETAILS

LS401

Printed: 14 Oct 2024 5:07 PM

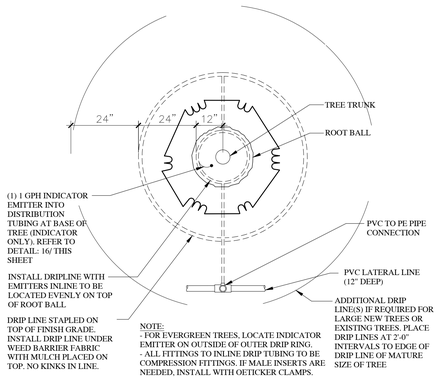

NOTE:
- FOR EVERGREEN TREES, LOCATE INDICATOR EMITTER ON OUTSIDE OF OUTER DRIP RING.
- ALL FITTINGS TO INLINE DRIP TUBING TO BE COMPRESSION FITTINGS. IF MALE INSERTS ARE NEEDED, INSTALL WITH OETICKER CLAMPS.

15 TREE DRIP - PLAN VIEW (PLANTER AREAS)
SCALE: NTS

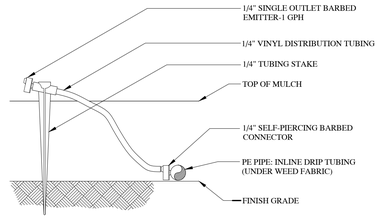

REFER TO DETAIL 15 ON THIS SHEET

NOTE:
1. CONNECT EMITTER DIRECTLY INTO IN-LINE DRIP TUBING.
2. THIS IS AN INDICATOR ONLY EMITTER. TO BE USED AT EACH TREE RING AND AREA WHERE IN-LINE TUBING IS INSTALLED.
3. 1/4" TUBING LENGTH: MINIMUM 14", MAXIMUM 24".
4. REFER TO DETAIL 15 ON THIS SHEET.

16 INDICATOR EMITTER
SCALE: NTS

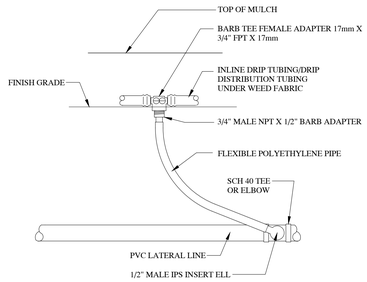

NOTES:
1. USE AT TREE RINGS ONLY.
2. LIMIT 1 VALVE PER BOX.
3. 10" MIN. LATERAL LINE DEPTH AT VALVE BOX. 12" MIN. LATERAL LINE DEPTH EVERYWHERE ELSE.
4. PROVIDE MIN. 2" CLEARANCE BETWEEN CONDUIT AND CMU BLOCK.

17 PVC TO BE PIPE CONNECTION
SCALE: NTS

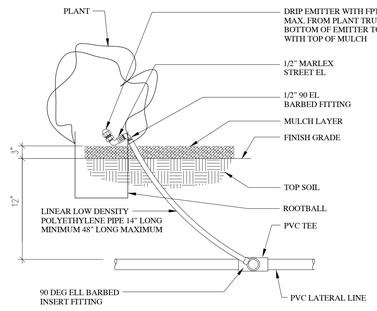

NOTE: LOCATE EMITTER ON BLDG OR FENCE SIDE OF PLANT.

18 DRIP EMITTER INSTALLATION
SCALE: NTS

NOTES:
1. LIMIT 1 VALVE PER BOX.
2. 10" MIN. LATERAL LINE DEPTH AT VALVE BOX. 12" MIN. LATERAL LINE DEPTH EVERYWHERE ELSE.
3. PROVIDE MIN. 2" CLEARANCE BETWEEN WIRE AND CMU BLOCK.
4. FOR MANIFOLD AND VALVE ASSEMBLY, SEE DETAIL:

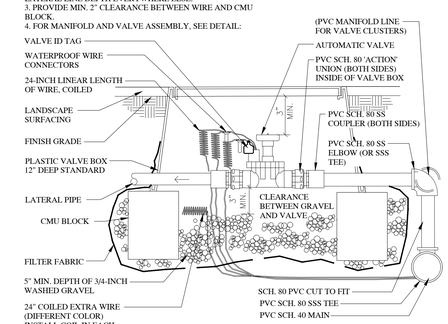

19 AUTOMATIC VALVE - CONVENTIONAL WIRE
SCALE: NTS

20 SPRAY AND ROTARY HEAD ASSEMBLY
SCALE: NTS

21 SPRAY HEAD OR ROTOR NEXT TO CURB / WALK
SCALE: NTS

22 ROTOR POP-UP HEAD
SCALE: NTS

In Site DESIGN GROUP
Landscape Architecture Land Planning
17 North 470 West American Fork, Utah 84003
801.756.5043 www.in-sitedesigngroup.com

bhd ARCHITECTS
www.bhdarchitects.com
Phone 801.571.0010
Fax 801.571.0303
Toll Free 888.571.0010
65 East Wadsworth Park Drive
Suite 205 Draper, Utah 84020

LICENSED LANDSCAPE ARCHITECT # 4884514 Cory B. Whiting 8-15-2024 STATE OF UTAH

THE CHURCH OF JESUS CHRIST OF LATTER-DAY SAINTS

Orem YSA 3rd 10 Ward Building
Orem UT YSA 3rd Stake

Approx. 1700 West 575 South
Vineyard, Utah 84059

Date: 15 Aug 2024
BHD #: 2244
County Parcel: 37:220:0001
Plan Series: 2024 10 Ward SC
Owner #: 3PG-1876

#	Date	Description
1	15 Aug 2024	Bid Documents
2	27 Aug 2024	Addendum #1
3	14 OCT 2024	Addendum #2

IRRIGATION DETAILS

LS402

Printed: 14 Oct 2024 5:07 PM

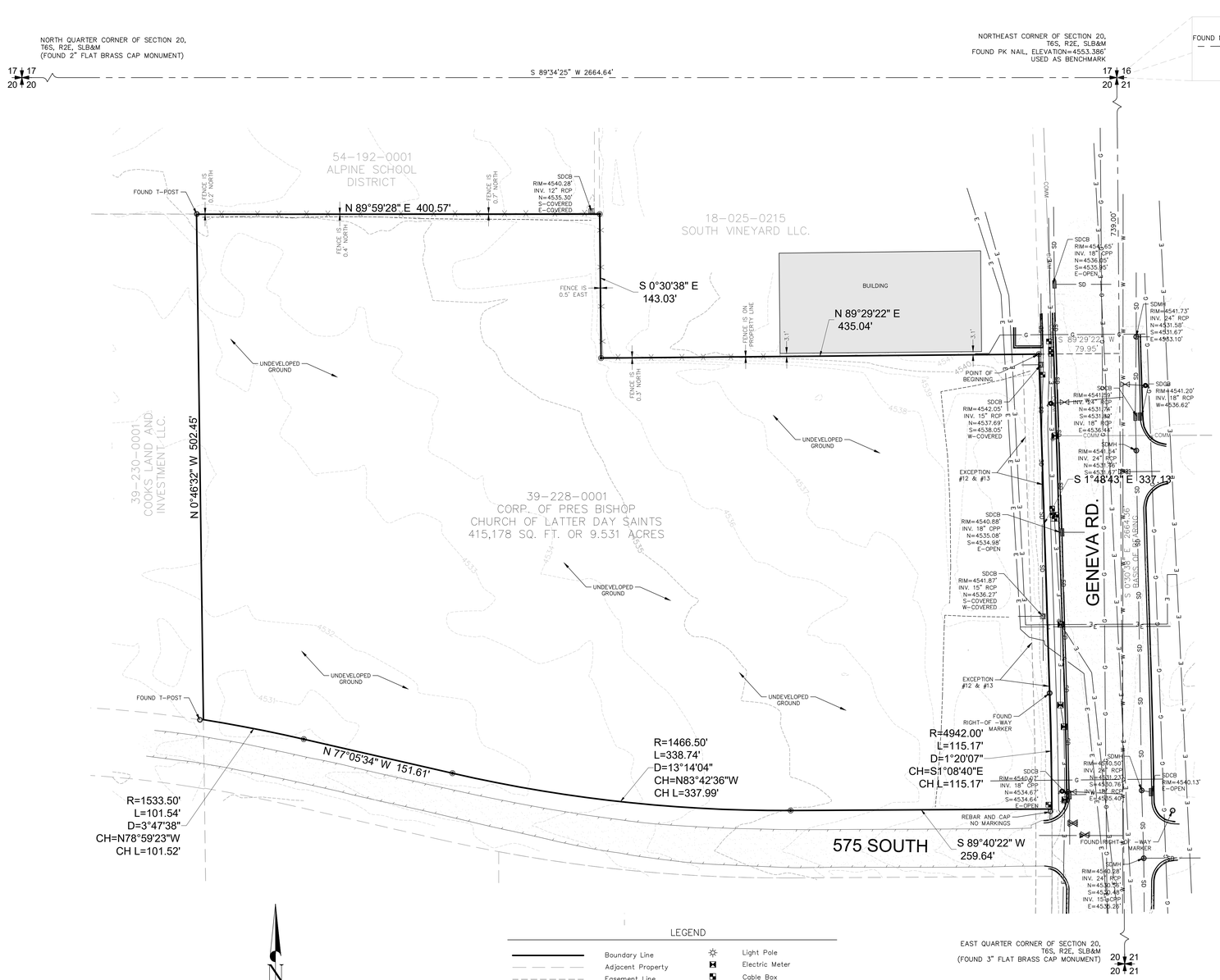

COMMITMENT NUMBER: BT-20738
COMMITMENT DATE: JULY 13, 2023 AT 8:00 AM
TO: CORPORATION OF THE PRESIDING BISHOP OF THE CHURCH OF JESUS CHRIST OF LATTER-DAY SAINTS, A UTAH CORPORATION SOLE
BARTLET TITLE INSURANCE AGENCY, INC.

THIS IS TO CERTIFY THAT THIS MAP OR PLAT AND THE SURVEY ON WHICH IT IS BASED WERE MADE IN ACCORDANCE WITH THE 2021 MINIMUM STANDARD DETAIL REQUIREMENTS FOR ALTA/NSPS LAND TITLE SURVEYS, JOINTLY ESTABLISHED AND ADOPTED BY ALTA AND NSPS, AND INCLUDES ITEMS 1, 2, 4, 5, 8, 11, AND 13 OF THE TABLE A THEREOF. THE FIELD WORK WAS COMPLETED ON SEPTEMBER 1, 2023.

Date of Plat: SEPTEMBER 15, 2023

Professional Land Surveyor
Nathan B. Weber, PLS
License No. 5152762

LEGAL DESCRIPTION

LOT 1, 575 SOUTH SUBDIVISION, PLAT "A", VINEYARD CITY, UTAH COUNTY, ACCORDING TO THE OFFICIAL PLAT THEREOF ON FILE AND OF RECORD IN THE UTAH COUNTY RECORDER'S OFFICE, UTAH.

SCHEDULE B, PART II EXCEPTIONS

ITEMS 1-10 ARE NOT SHOWN INTENTIONALLY AS THEY ARE NOT SURVEY ITEMS.

11. EASEMENT IN FAVOR OF THE MOUNTAIN STATES TELEPHONE AND TELEGRAPH CO, RECORDED JANUARY 2, 1919 AS ENTRY NO. 63 IN BOOK 180 AT PAGE 560 OF OFFICIAL RECORDS.

SURVEY FINDINGS: NOT PLOTTED, BLANKETS ENTIRE SITE ALONG WITH OTHER GROUND.

12. SLOPE EASEMENT AGREEMENT GRANTED TO THE UTAH DEPARTMENT OF TRANSPORTATION, RECORDED FEBRUARY 4, 2011 AS ENTRY NO. 11244:2011 OF OFFICIAL RECORDS.

SURVEY FINDINGS: PLOTTED, AFFECTS THE EASTERLY PORTION OF THIS SITE.

13. EASEMENT GRANTED TO UTAH DEPARTMENT OF TRANSPORTATION FOR THE PURPOSE OF CONSTRUCTING IRRIGATION FACILITIES INCLUDING PIPELINE IMPROVEMENTS, RECORDED JUNE 27, 2011 AS ENTRY NO. 46560:2011 OF OFFICIAL RECORDS.

SURVEY FINDINGS: PLOTTED, AFFECTS THE EASTERLY PORTION OF THIS SITE.

NOTES:

THE BASIS OF BEARING IS SOUTH 0°30'38" EAST BETWEEN THE FOUND NORTHEAST CORNER AND THE EAST QUARTER CORNER OF SECTION 20, TOWNSHIP 6 SOUTH, RANGE 2 EAST, SALT LAKE BASE AND MERIDIAN, UTAH COUNTY, UTAH AS SHOWN. THE SURVEY CONTROL WAS ESTABLISHED WITH GPS. THE GPS DATA WAS MEASURED ON THE UTAH STATE PLANE CENTRAL ZONE USF NAD83 SYSTEM AND WAS THEN PROJECTED TO A LOW DISTORTION GROUND SYSTEM FOR THIS SURVEY. A UAS SYSTEM WAS USED TO ASSIST IN MEASURING AND MAPPING THE PROPERTY AND AN ORTHO-RECTIFIED PHOTO OF THE SITE WAS USED FOR MAPPING FEATURES SUCH AS ROADWAYS AND WATERWAYS.

1. THE PURPOSE OF THIS SURVEY IS TO RETRACE AND MONUMENT THE BOUNDARY OF THE DESCRIBED PROPERTY ACCORDING TO THE OFFICIAL RECORDS AND THE LOCATION OF PERTINENT EXISTING IMPROVEMENTS LOCATED ON THE GROUND.

2. THIS DOES NOT REPRESENT A TITLE SEARCH BY THE SURVEYOR. TITLE INFORMATION WAS PROVIDED BY OTHERS FOR THE SUBJECT PROPERTY.

3. THE LOCATION OF UNDERGROUND UTILITIES AS SHOWN HEREON ARE BASE ON ABOVE GROUND STRUCTURES. LOCATIONS OF UNDERGROUND UTILITIES/STRUCTURES MAY VARY FROM LOCATIONS SHOWN HEREON. ADDITIONAL BURIED UTILITIES/STRUCTURES MAY BE ENCOUNTERED. NO EXCAVATIONS WERE MADE DURING THE PROGRESS OF THIS SURVEY TO LOCATE BURIED UTILITIES/STRUCTURES. BEFORE EXCAVATIONS ARE BEGUN, PLEASE CONTACT APPROPRIATE AGENCIES.

4. THE PURPORTED ADDRESS FOR THIS SITE IS 750 EAST 575 SOUTH, VINEYARD, UTAH 84057 BASED ON DOCUMENTATION PROVIDED AT THE TIME OF THE SURVEY.

DIAMOND LAND SURVEYING
6891 South 700 West Ste. 150
Midvale, Utah 84047
Phone (801) 266-5099 Fax (801) 266-5032
office@diamondlandsurveying.com
www.diamondlandsurveying.com

Boundary Surveys
Topography Surveys
Subdivisions
Construction Staking
A.L.T.A. & A.C.S.M. Surveys

LOCATED IN THE NORTHEAST QUARTER OF SECTION 20, TOWNSHIP 6 SOUTH, RANGE 2 EAST, SALT LAKE BASE AND MERIDIAN

bhd ARCHITECTS
www.bhdarchitects.com
Phone 801.571.0010
Fax 801.571.0303
Toll Free 888.571.0010
65 East Wadsworth Park Drive
Suite 205 Draper, Utah 84020

THE CHURCH OF JESUS CHRIST OF LATTER-DAY SAINTS

Orem YSA 3rd 10 Ward Building
Orem UT YSA 3rd Stake
Approx 1700 West 575 South
Vineyard, Utah 84059

Owner #: 5901876
Plan Series: 2024 10 Ward S.C.
County Parcel: 39-228-0001
BHD #: 2344
Date: 13 Aug 2024

Drawing Issue and Revision Schedule		
#	Date	Description
1	13 Aug 2024	Bid Documents

Site Survey

C101

Plotted: 12 Aug 2024 12:41 PM

bhd ARCHITECTS
www.bhdarchitects.com
Phone 801.571.0010
Fax 801.571.0303
Fax New 866.571.0010
45 East Wadsworth Park Drive
Suite 205 Draper, Utah 84020

SPECTRUM ENGINEERS
324 S. State St., Suite 400
Salt Lake City, UT 84111
801-328-2577
801-328-5151
fax: 801-328-5155
www.spectrum-engineers.com

THE CHURCH OF JESUS CHRIST OF LATTER-DAY SAINTS

Orem VSA 3rd 10 Ward Building
Orem UT VSA 3rd Stake
Approx. 1700 West 575 South
Vineyard, Utah 84059

Date: 15 Aug 2024 | BHD #: 2344 | County Parcel: 39:228:0001 | Plan Series: 2024 10 Ward SC | Owner #: 590-1876

#	Date	Description
1	15 Aug 2024	Bid Documents
2	27 Aug 2024	Addendum # 1

Drawing Issue and Revision Schedule

Site Photometrics

E110

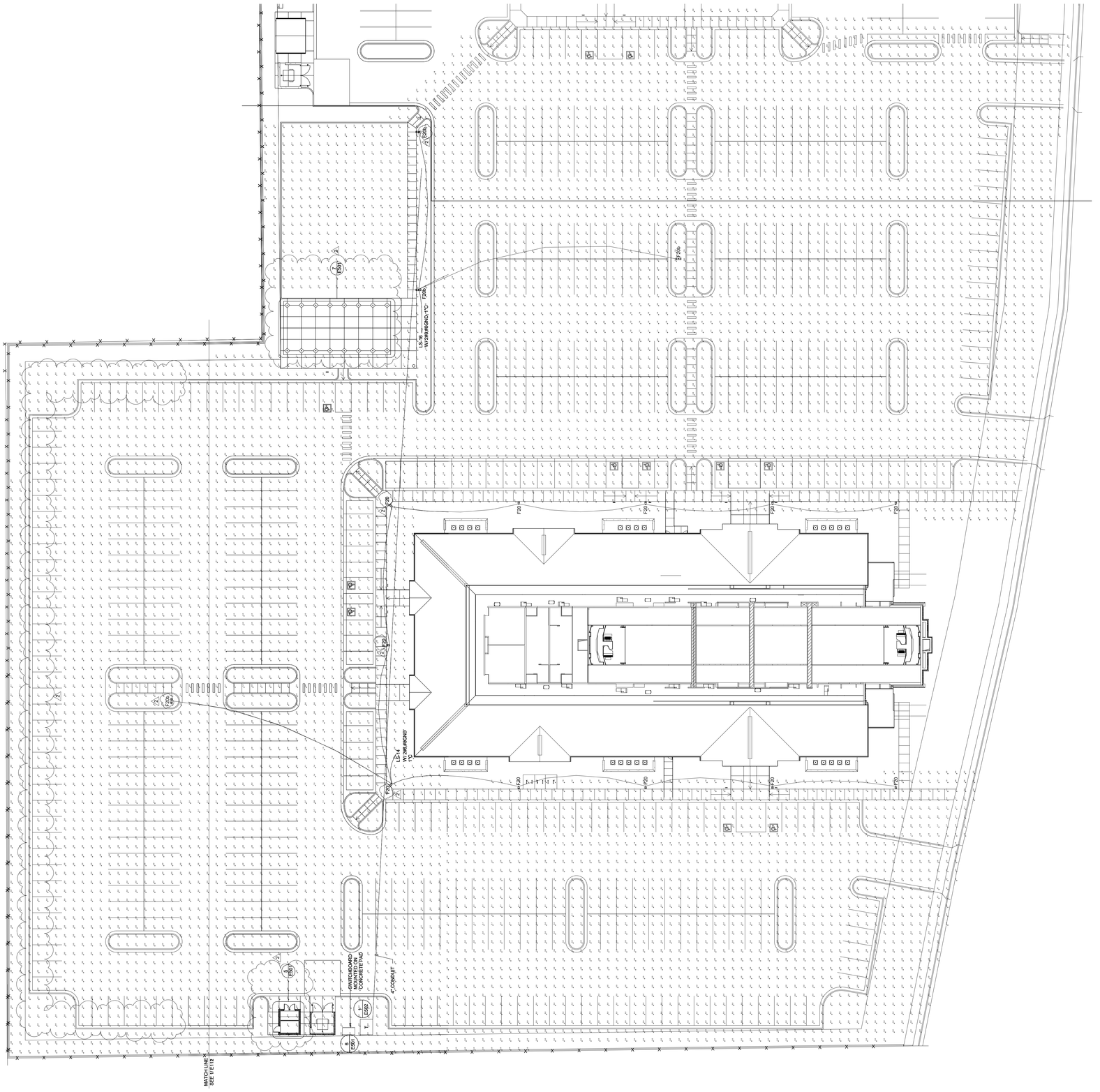

Phone 801.571.0010
Fax 801.571.0303
Toll Free 888.571.0010
bhdarchitects.com

65 East Wadsworth Park Drive
Suite 205 Draper, Utah 84020

Project Narrative

Date

Thu, 16 Jan 2025

BHDA Project Number

2344

Project Designation

Orem YSA 3rd 10 Ward Building
Orem UT YSA 3rd Stake

Project Address

Approx. 1700 West 575 South
Vineyard, Utah

Narrative

To Whom it May Concern:

The Church of Jesus Christ of Latter-day Saints is proposing to construct two new meetinghouses in a campus layout on the parcel of land located at the address above. One meetinghouse [Orem YSA 3rd 10 Ward Building] will be a meetinghouse for unmarried college students. The adjacent meetinghouse [Springwater] will serve local residents in the vicinity. We intend to have separate building permits, but not separate the parcels. We also do not intend to do a phased construction, but to build both buildings at the same time.

This project, the YSA building, will be a double-chapel meetinghouse with stake offices and space for 10 young single adult wards. It will also have a cultural hall, offices, and classrooms for religious use. The exterior materials will be earth-toned brick, with asphalt shingles. There will also be a 30 foot by 60 foot pavilion on the northeast corner of the site, between the two meetinghouses, which will include picnic tables and facilitate outdoor activities.

An asphalt parking lot with 425 total parking spaces is provided.

Landscaping will include some lawn, but most of the landscaping will be composed of rock mulch, trees, and shrubs. The design will be drought tolerant but also attractive and will fit in the with neighborhood.

The building and site will be used on Sundays throughout the day and during the week, mostly in the evenings.

If one of the buildings is completed before the other, the completed building will be the only one used. The contractors for both buildings will provide construction fencing for their individual building. This means that if one is completed earlier, a fence will still remain between the completed site and the unfinished site, which will keep parking contained on the completed site.

Building and Site Design Information

Total Parcel Area: 5.89 acres

Building Areas:

- Meetinghouse: 32,713 sf
- Pavilion: 1,800 sf
- Storage Building: 244 sf

Landscape Areas:

- Total: 54,553 sf
- Shrub/Groundcover: 41,261 sf (829 plants)
- Lawn: 13,292 sf
- Trees: 75

Impervious Areas:

- Asphalt pavement: 140,600 sf
- Concrete: 26,513 sf

End of Project Narrative

Orem YSA 3rd / 10 Ward Stake Center

750 East 575 South Traffic Impact Study

Vineyard, Utah

September 2024

TRAFFIC STUDY

TRANSPORTATION ENGINEERING

A-Trans Engineering
P.O. Box 521651
Salt Lake City, Utah 84152
(801) 949-0348 Phone

Orem YSA 3rd / 10 Ward Stake Center

750 East 575 South Traffic Impact Analysis

Vineyard, Utah

Category II

September 2024

Prepared by:

A-Trans Engineering, LLC
Joseph Perrin, PhD, PE, PTOE
P.O. Box City, 521651
Salt Lake City, Utah 84152
(801) 949-0348
atrans@comcast.net

Table of Contents

I. Introduction and Summary 1

II. Proposed Project 2

III. Study Area Conditions 4

IV. Analysis of Existing Condition 7

V. Projected Traffic 9

VI. Growth 13

VII. Traffic Analysis 17

VIII. Conclusions 19

Table of Figures

Figure 1: Conceptual Site Plan 3

Figure 2: Site Location 5

Figure 3: Existing Geometry 6

Figure 4: Existing Traffic 8

Figure 5: Origin Destination 11

Figure 6: Site Trip Distribution 12

Figure 7: 2030 Background Traffic 14

Figure 8: 2025 Total Traffic 15

Figure 9: 2030 Total Traffic 16

Table of Tables

Table 1: Analysis Results and Summary 1

Table 2: Intersection LOS-Delay Relationship 7

Table 3: Existing Level of Service 7

Table 4: Trip Generation for Site 9

Table 5: Analysis Results 17

Table 6: Geneva Road / 575 South Intersection Analysis 18

Table 7: Geneva Road / Access X Analysis 18

Table 8: Geneva Road / Access Y Analysis 18

Table 9: Geneva Road / Access Z Analysis 18

I. Introduction and Summary

This traffic impact analysis is for the proposed Orem YSA 3rd and 10 ward stake center development located at 750 East 575 South on the northwest corner of Geneva Road and 575 South in Vineyard, Utah. The site is planned to include a 32,713 square foot stake center and a 17,000 square foot meetinghouse. Because the site is a chapel, Sunday is the peak period and is projected to generate 249 inbound and 269 outbound Sunday peak hour trips. The site is proposing three accesses on 575 South.

Table 1 shows the results of the analysis.

Table 1: Analysis Results and Summary

		2024 Existing	2025 Total	2030 Background	2030 Total
Geneva Road / 575 South	SUNDAY	EBL side street delay at 21.3/C	EBL side street delay at >100/F	EBL side street delay at 26.2/D	EBL side street delay at >100/F
575 South / Access X	SUNDAY		Access SBL egress at 14.7/B		Access SBL egress maintained at 14.7/B
575 South / Access Y	SUNDAY		Access SBL egress at 11.9/B		Access SBL egress maintained at 11.9/B
575 South / Access Z	SUNDAY		Access SBL egress at 12.1/B		Access SBL egress at 12.2/B

Recommendations: No auxiliary lanes are recommended for this development.

II. Proposed Project

The site is planning three accesses on 575 South. The eastern access X is located approximately 360 feet west of Geneva Road, the middle access Y is located approximately 202 feet west of access X, and the western access Z is located approximately 248' west of access Y and 550' east of 1800 West. Accesses are measured from center to center.

The proposed conceptual site plan and access spacing are shown in Figure 1.

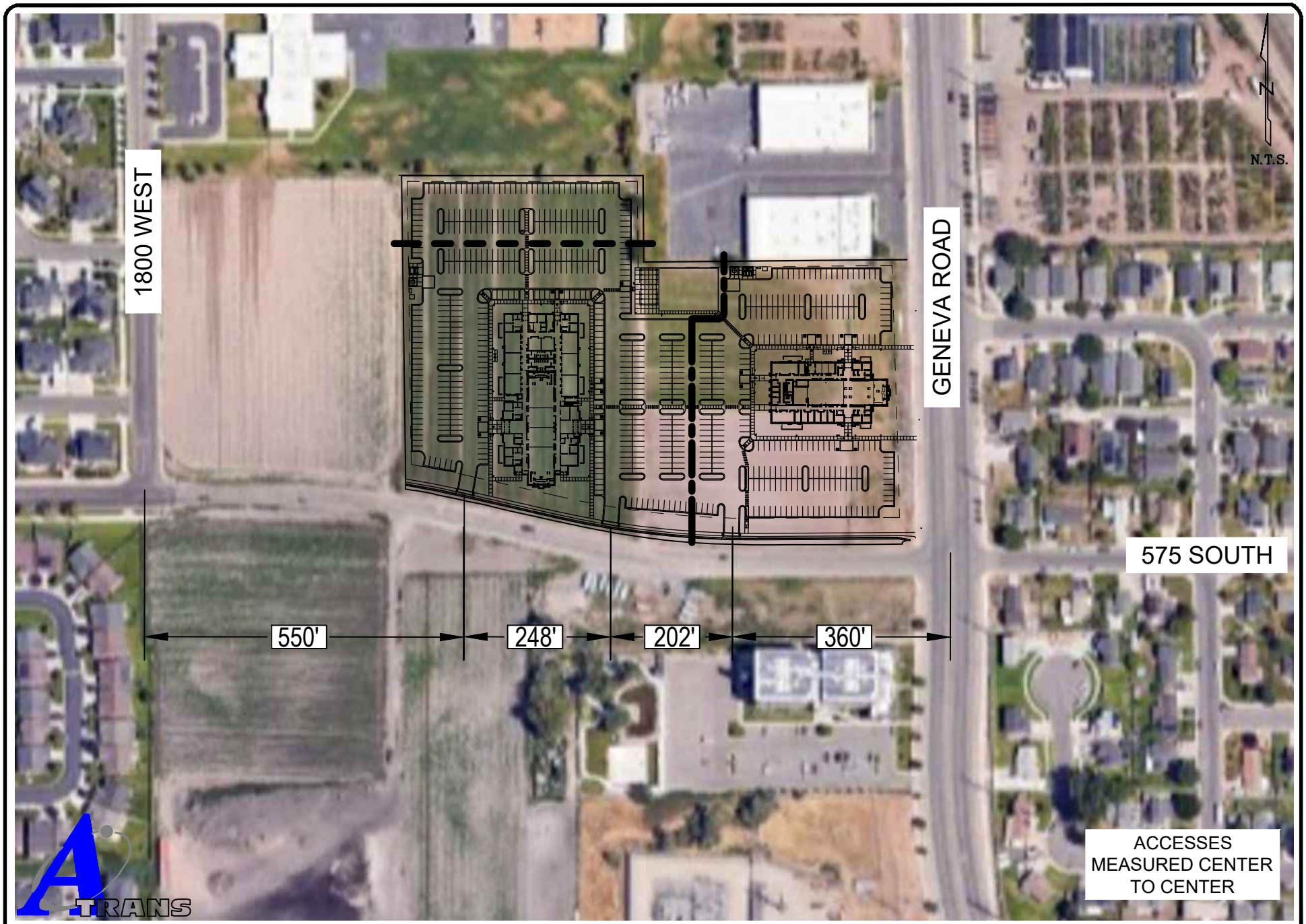

A-TRANS TRANSPORTATION ENGINEERING
P.O. BOX 521651, SLC, UT 84152
Phone: 801-949-0348 Fax: 801-582-6252

Figure 1

Conceptual Site Plan

III. Study Area Conditions

The study area includes the following intersection.

- Geneva Road / 575 South

Figure 2 shows the location of the site. Figure 3 shows existing intersection geometry.

Geneva Road
Geneva Road (SR 114) is a 5 lane facility with two lanes in each direction and a center turn lane and shoulder with a bike lane on each side. The 2023 AADT is 14,000 vehicles per day with a posted speed limit of 45 MPH. UDOT classifies Geneva Road as a Category 5 roadway.

575 South
575 South (RT 2977) is a 2 lane facility with one lane in each direction. The 2023 AADT is 510 vehicles per day with a posted speed limit of 30 MPH.

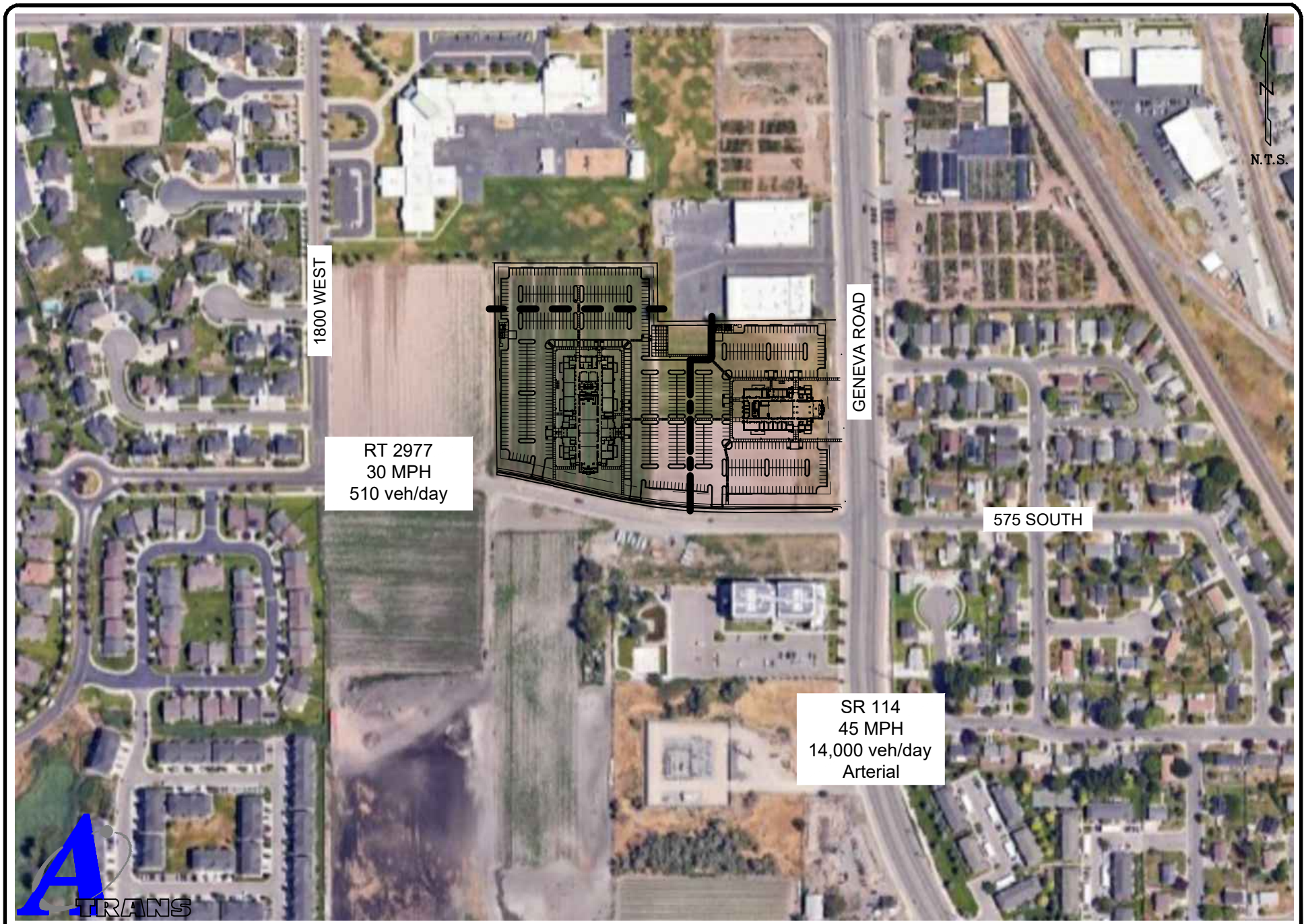

A-TRANS TRANSPORTATION ENGINEERING P.O. BOX 521651, SLC, UT 84152 Phone: 801-949-0348 Fax: 801-582-6252	Figure 2	Site Location

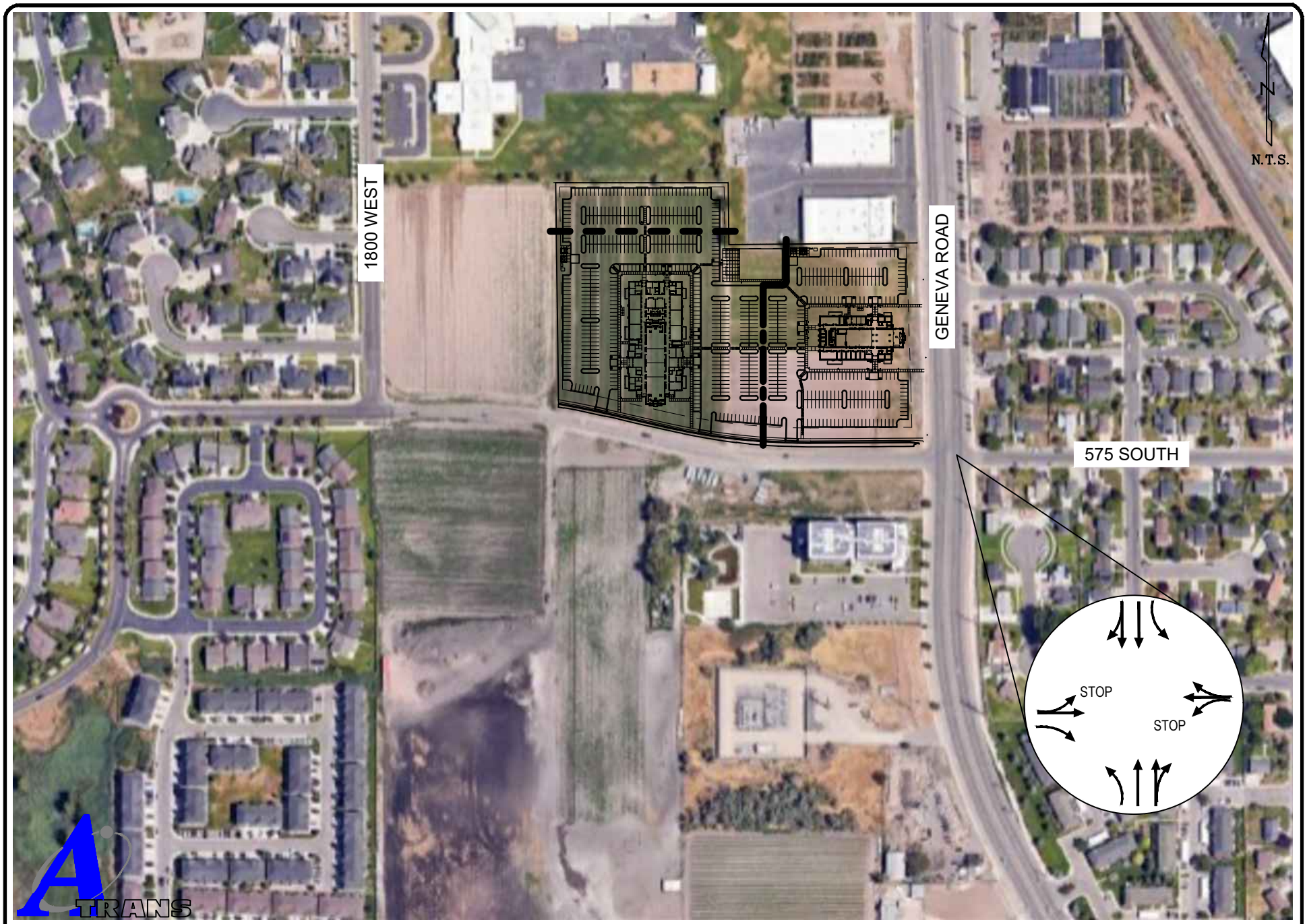

A-TRANS TRANSPORTATION ENGINEERING P.O. BOX 521651, SLC, UT 84152 Phone: 801-949-0348 Fax: 801-582-6252	Figure 3	Existing Geometry

IV. Analysis of Existing Condition

The existing traffic counts were performed September 22, 2023 during the assumed Sunday peak period (10:00AM – 12:00 PM). 2024 Sunday Existing Traffic volumes are shown in Figure 4.

The Highway Capacity Manual defines the Level of Service (LOS) for both signalized and unsignalized intersections as a range of average experienced delay. LOS is a qualitative rating of traveler satisfaction from A to F whereby LOS A is good and LOS F poor. Table 2 shows the LOS range by delay for unsignalized and signalized intersections and accesses.

Table 2: Intersection LOS-Delay Relationship

	Unsignalized	Signalized
Level of Service	Total Delay per Vehicle (sec)	Total Delay per Vehicle (sec)
A	$\leq$ 10.0	$\leq$ 10.0
B	> 10.0 and $\leq$ 15.0	> 10.0 and $\leq$ 20.0
C	> 15.0 and $\leq$ 25.0	> 20.0 and $\leq$ 35.0
D	> 25.0 and $\leq$ 35.0	> 35.0 and $\leq$ 55.0
E	> 35.0 and $\leq$ 50.0	> 55.0 and $\leq$ 80.0
F	> 50.0	> 80.0

The analysis shows that Geneva Road / 575 South operates with side street delay at LOS C for the Sunday peak period. Table 3 shows the Existing LOS.

Table 3: Existing Level of Service

	Geneva Road / 575 South (EBL)	
Sunday	21.3	C

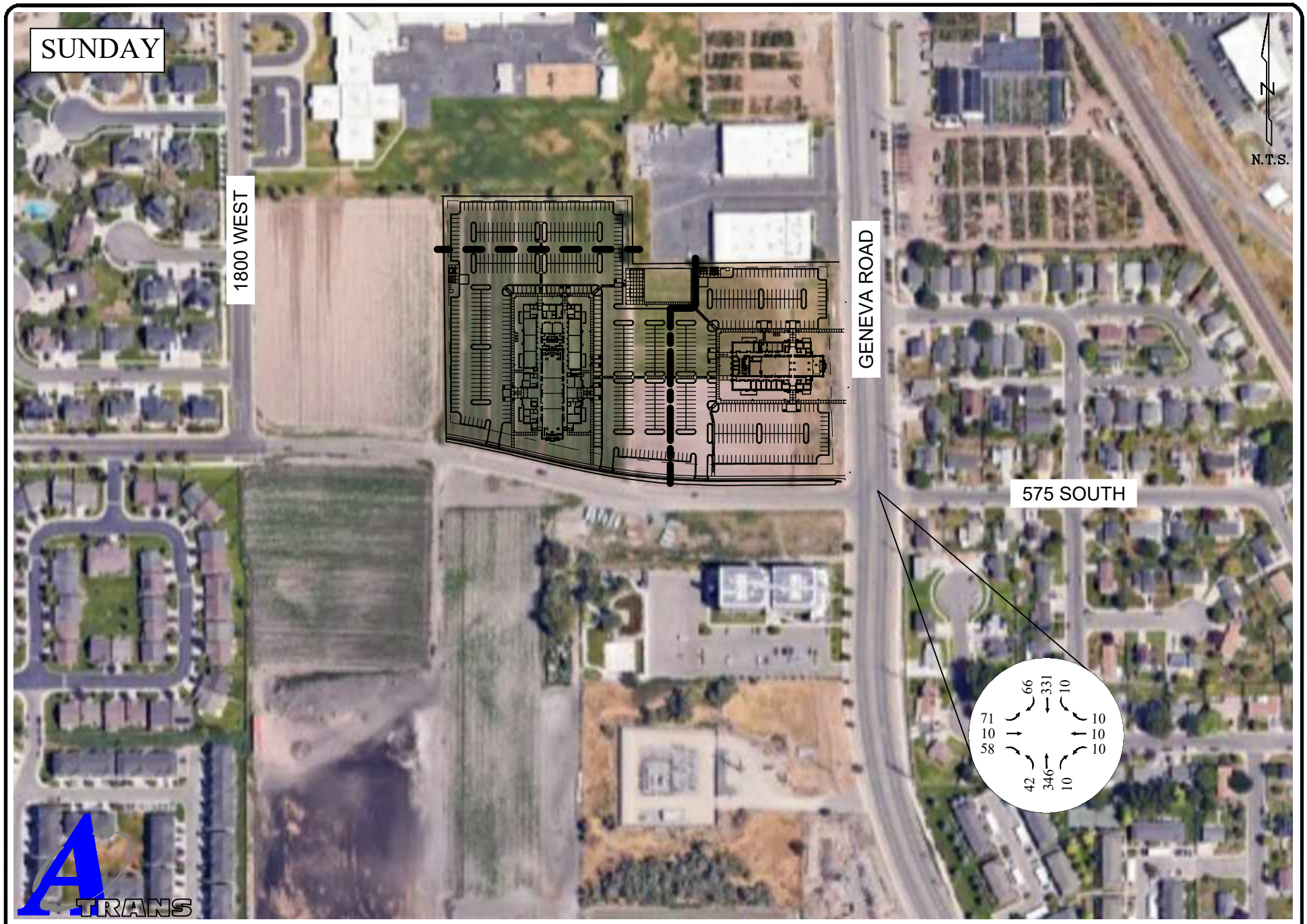

A-TRANS TRANSPORTATION ENGINEERING P.O. BOX 521651, SLC, UT 84152 Phone: 801-949-0348 Fax: 801-582-6252	Figure 4	Existing Traffic

V. Projected Traffic

A. Trip Generation

Trip generation for the site was done using The Institute of Transportation Engineers (ITE) *Trip Generation* (11th Edition) handbook. The site is a 32,713 square foot stake center and a 17,000 square foot meetinghouse. The site is projected to generate 518 peak hour trips. The trip generation for the site is shown in Table 4.

The 2-hour session will happen approximately three times during the Sunday as the 9:00 AM, 10:30 AM and noon start times allow for an overlap of two wards at the church at a time. But since the start (entrance) and ending (exit) times are temporally separated by 30 minutes, this allows for much better traffic flow.

Table 4: Trip Generation for Site

Land Use Type	Density	Land Use #	Trip Rate	Trips	% In	% Out	Trips In	Trips Out
Sunday								
Chapel	32,713 sf	560	10.36	339	48%	52%	163	176
Chapel	17,000 sf	560	10.36	179	48%	52%	86	93
Total								
				518			**249**	**269**

B. Trip Distribution

Origin-destination was determined from evaluating the location of neighboring residential development as well as the existing traffic patterns of trips at the counted intersections. This was used as a baseline for origin destination and engineering judgment was applied to this to determine the following OD for the site.

- 35% to/from north on Geneva Road
- 45% to/from south on Geneva Road
- 20% to/from west on 575 South

Origin Destination is shown in Figure 5. Site trip distribution is shown in Figure 6.

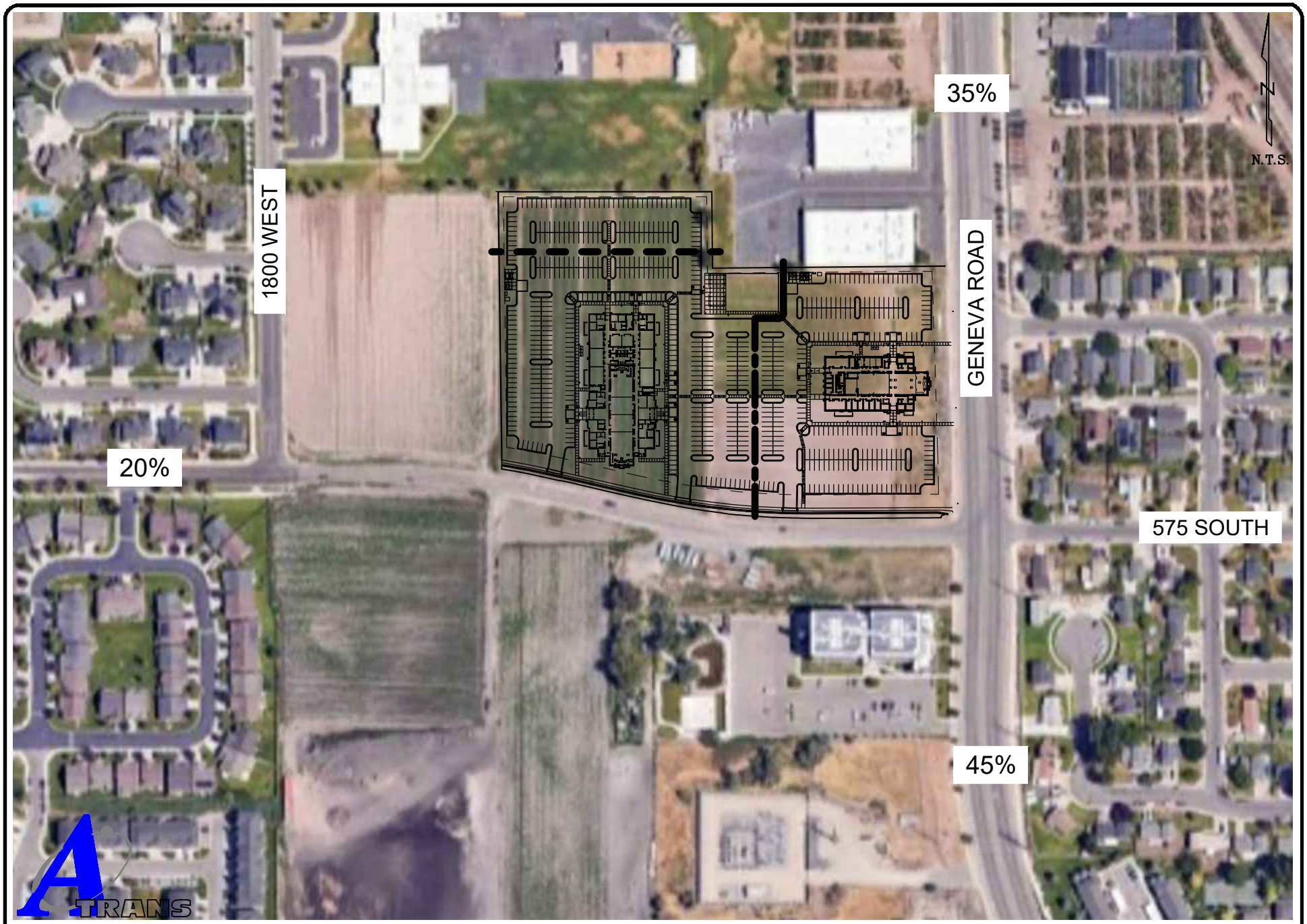

A-TRANS TRANSPORTATION ENGINEERING P.O. BOX 521651, SLC, UT 84152 Phone: 801-949-0348 Fax: 801-582-6252	Figure 5	Origin Destination

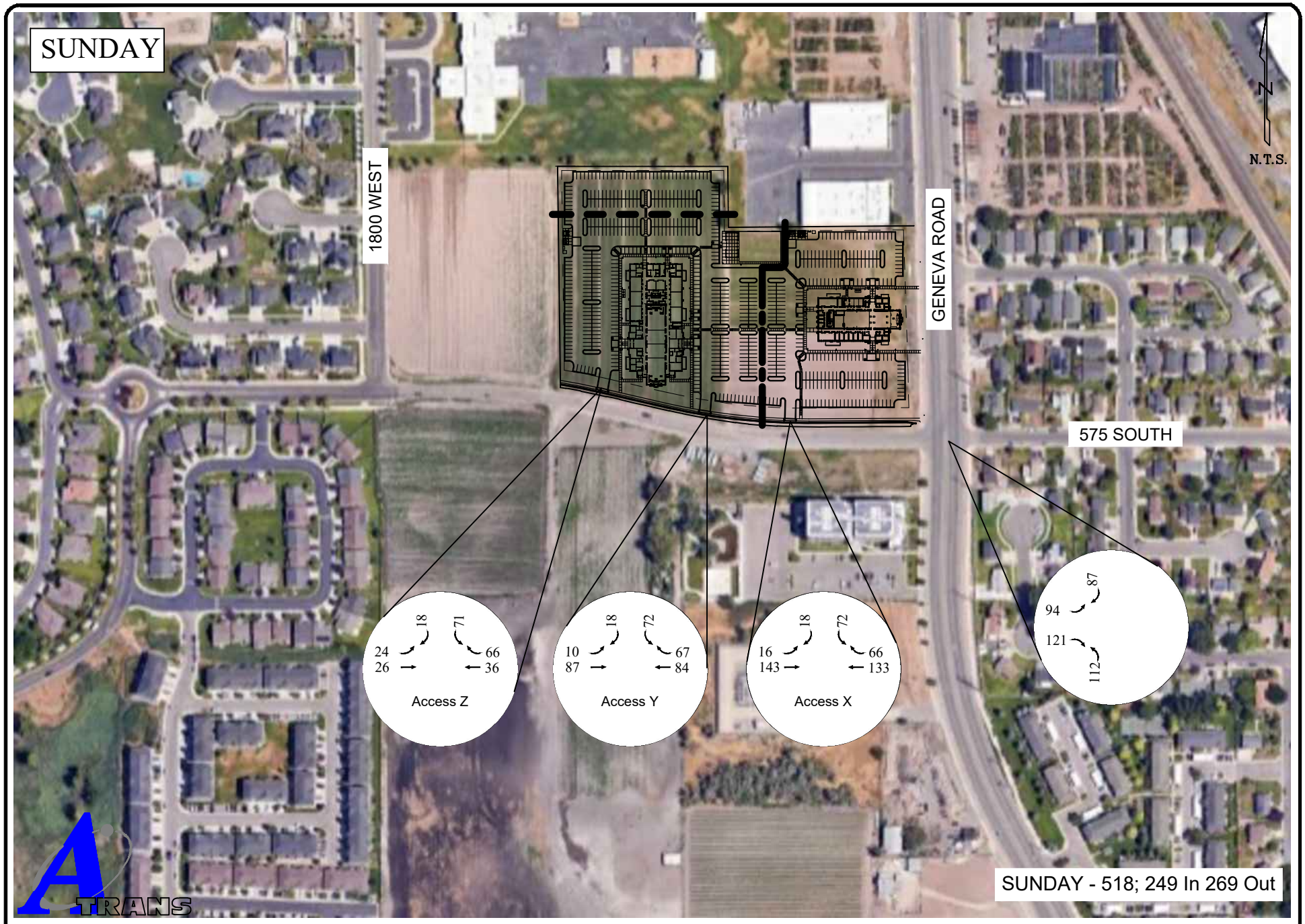

A-TRANS TRANSPORTATION ENGINEERING P.O. BOX 521651, SLC, UT 84152 Phone: 801-949-0348 Fax: 801-582-6252	Figure 6	Site Trip Distribution

VI. Growth

Growth in the area was determined from UDOT's Traffic on Utah Highways and projections from WFRC. Based on this data an average growth of 1.26% is assumed. The 2030 growth factor is 1.06.

2030 Background Traffic is shown in Figure 7. 2025 Total Traffic is shown in Figure 8 and 2030 Total Traffic is shown in Figure 9.

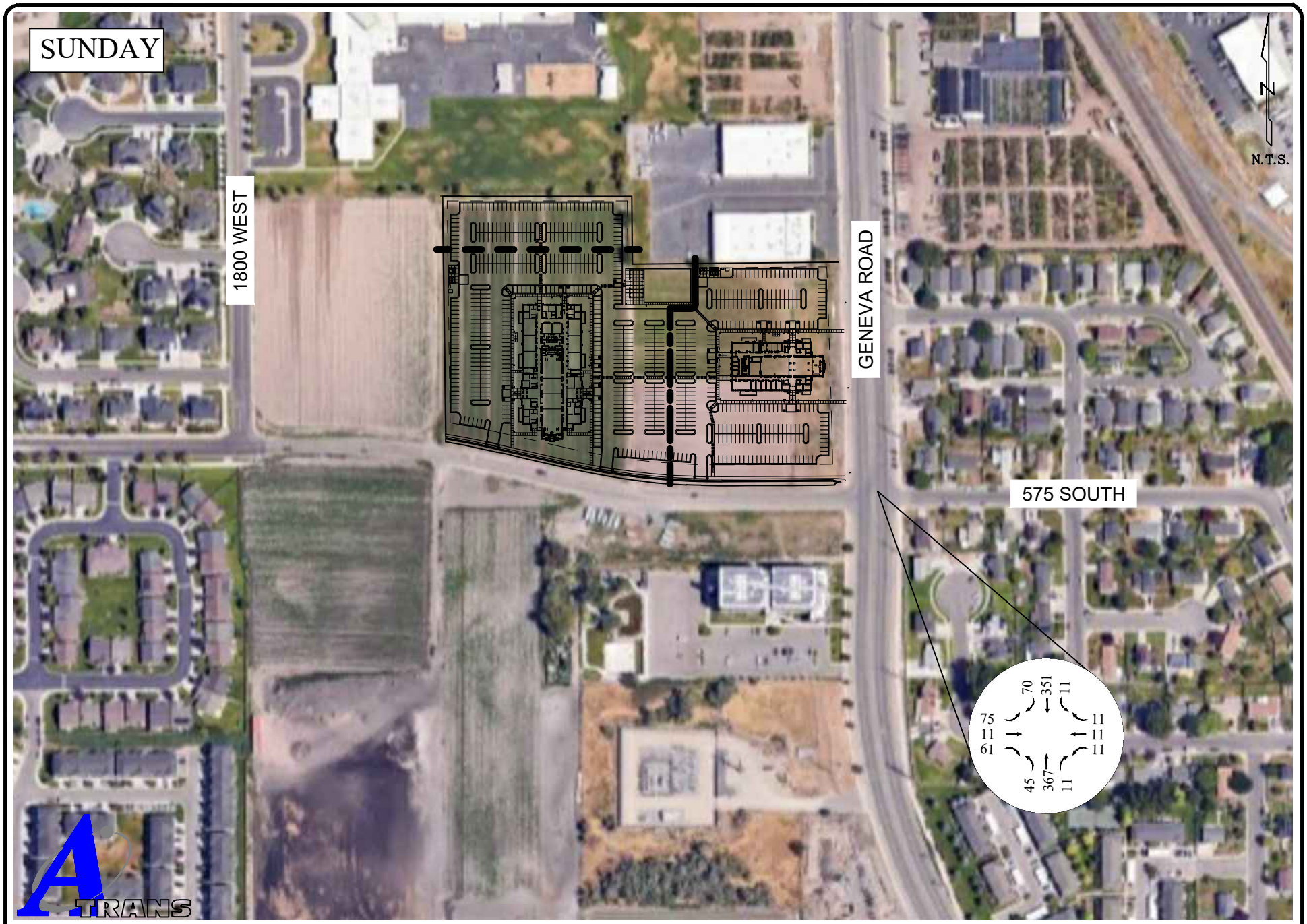

A-TRANS TRANSPORTATION ENGINEERING P.O. BOX 521651, SLC, UT 84152 Phone: 801-949-0348 Fax: 801-582-6252	Figure 7	2030 Background Traffic

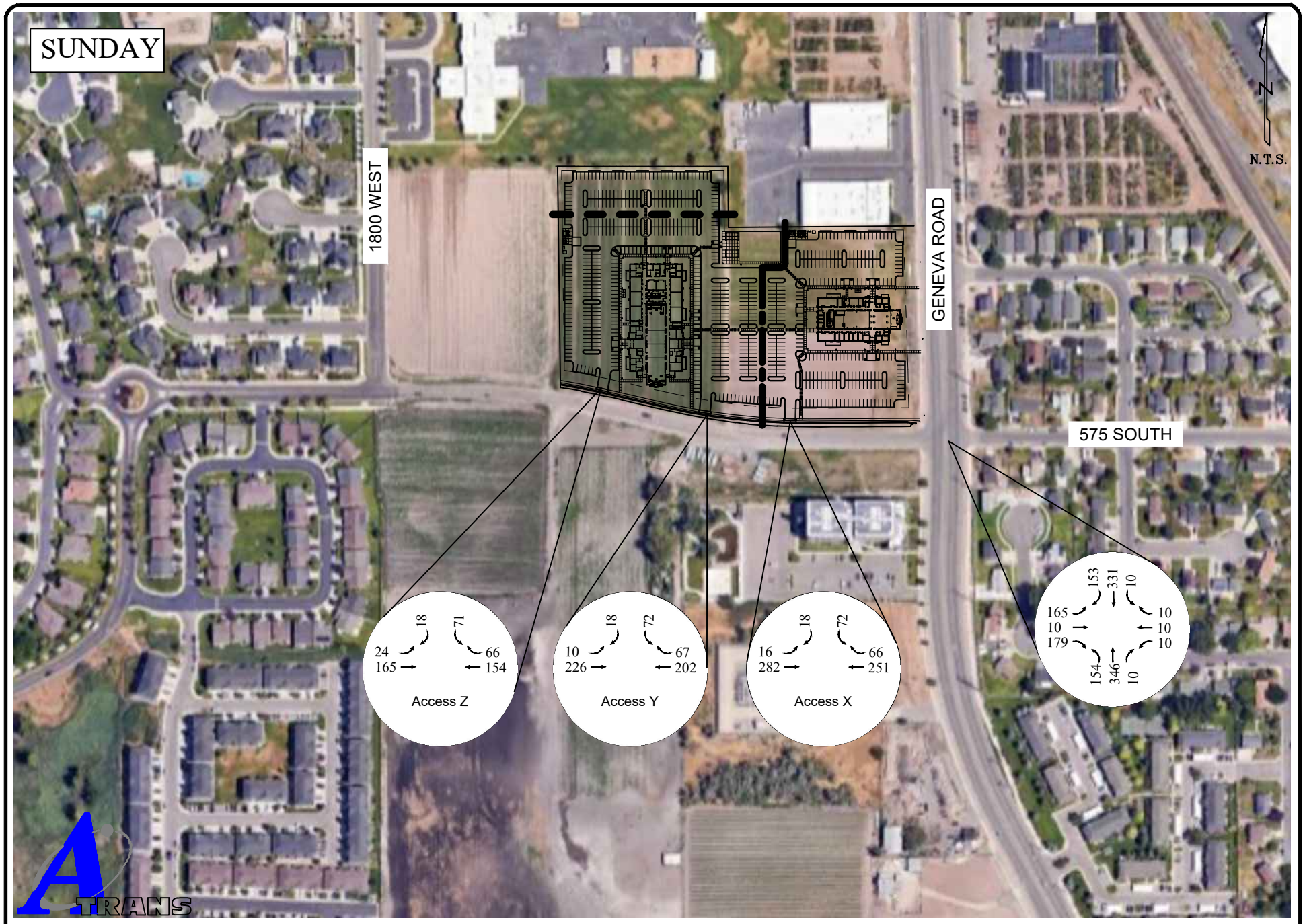

A-TRANS TRANSPORTATION ENGINEERING P.O. BOX 521651, SLC, UT 84152 Phone: 801-949-0348 Fax: 801-582-6252	Figure 8	2025 Total Traffic

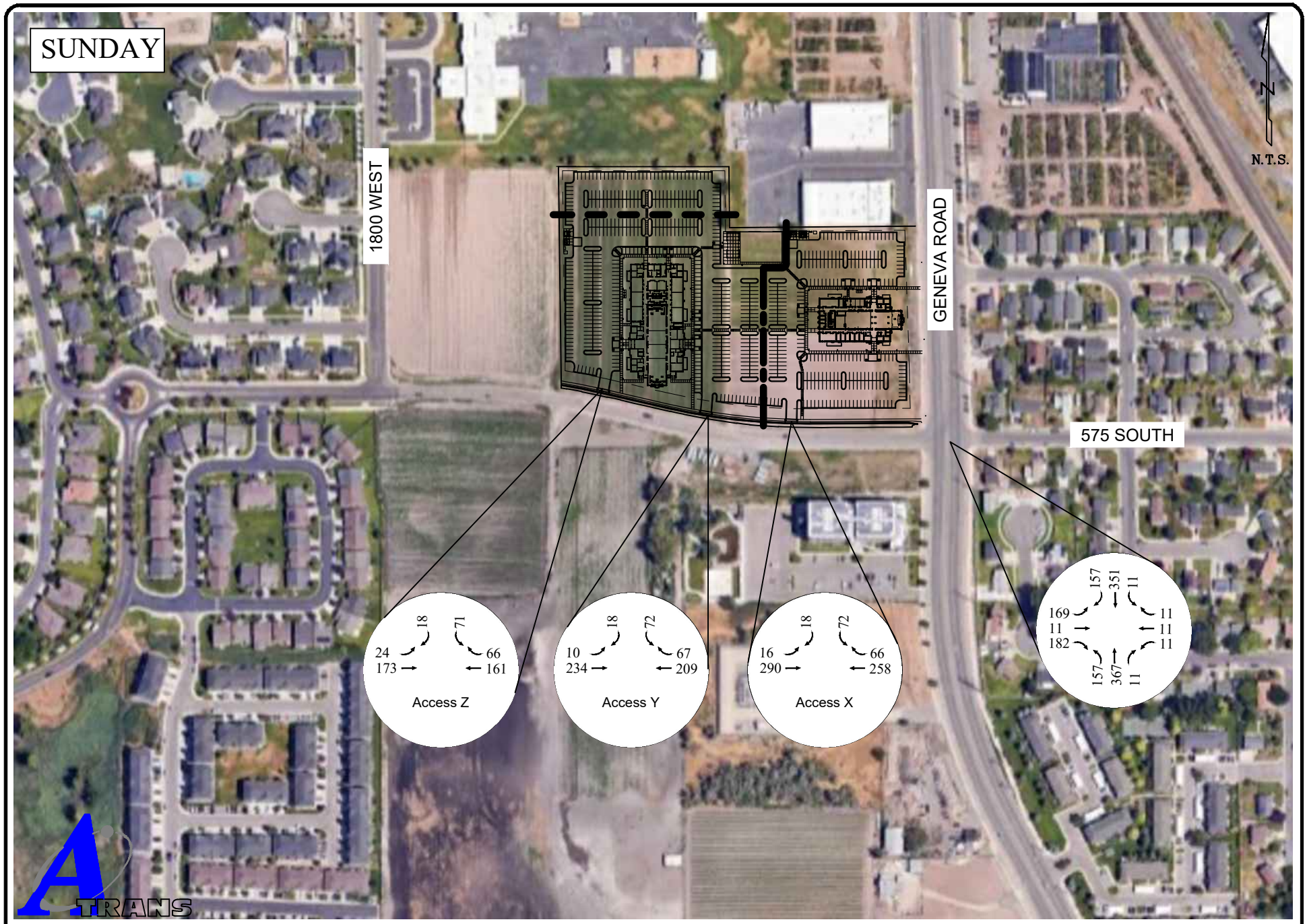

A-TRANS TRANSPORTATION ENGINEERING P.O. BOX 521651, SLC, UT 84152 Phone: 801-949-0348 Fax: 801-582-6252	Figure 9	2030 Total Traffic

VII. Traffic Analysis

A. Level of Service Analysis

The intersection and access analysis evaluates the performance of each intersection and access using the measure of performance of delay and level of service (LOS). Table 5 provides a summary of the analysis. Tables 6-9 show the intersection and access analysis.

Table 5: Analysis Results

		2024 Existing	2025 Total	2030 Background	2030 Total
Geneva Road / 575 South	SUNDAY	EBL side street delay at 21.3/C	EBL side street delay at >100/F	EBL side street delay at 26.2/D	EBL side street delay at >100/F
575 South / Access X	SUNDAY		Access SBL egress at 14.7/B		Access SBL egress maintained at 14.7/B
575 South / Access Y	SUNDAY		Access SBL egress at 11.9/B		Access SBL egress maintained at 11.9/B
575 South / Access Z	SUNDAY		Access SBL egress at 12.1/B		Access SBL egress at 12.2/B

Table 6: Geneva Road / 575 South Intersection Analysis

		NBL	EBL	EBR	WBL	SBL
2024 Existing	SUNDAY	8.3 A	21.3 C	11.7 B	16.4 C	8.1 A
2030 Background	SUNDAY	8.7 A	26.2 D	12.8 B	18.6 C	8.2 A
2025 Total	SUNDAY	9.1 A	>100 F	13.8 B	27.7 D	8.1 A
2030 Total	SUNDAY	9.3 A	>100 F	14.6 B	31.0 D	8.2 A

Table 7: Geneva Road / Access X Analysis

		EBL	SBL
2025 Total	SUNDAY	8.0 A	14.7 B
2030 Total	SUNDAY	8.0 A	14.7 B

Table 8: Geneva Road / Access Y Analysis

		EBL	SBL
2025 Total	SUNDAY	7.9 A	11.9 B
2030 Total	SUNDAY	7.9 A	11.9 B

Table 9: Geneva Road / Access Z Analysis

		EBL	SBL
2025 Total	SUNDAY	7.8 A	12.1 B
2030 Total	SUNDAY	7.8 A	12.2 B

VIII. Conclusions

This traffic impact analysis is for the proposed Orem YSA 3rd and 10 ward stake center development located at 750 East 575 South on the northwest corner of Geneva Road and 575 South in Vineyard, Utah. The site is planned to include a 32,713 square foot stake center and a 17,000 square foot meetinghouse. Because the site is a chapel, Sunday is the peak period and is projected to generate 249 in and 269 out Sunday peak hour trips. The site is planning three accesses on 575 South.

The sites peak time is on Sunday. It will support the needs of the neighborhood and the traffic is likely from the immediate area. Because of the focused arrival and departure of traffic to the church, the 575 South at Geneva Road will experience a short time of congestion during the unloading of the parking lot. This short periods of congestion on a Sunday does not warrant any improvements to the intersection control method, i.e. a traffic signal is NOT warranted for this land use.

The proposed three accesses to the church allow for the parking fields to be loaded for the two buildings. With the access spacing shown in Figure 1 as measured from centerline to centerline, the eastern most access is 360 feet from Geneva Road the next access is 202feet to the west and the western most access is 248 feet from the center access and then it is 550 feet to the next City street to the west, 1800 West. There are no anticipated issues with this access spacing or operations as there are no significant accesses to the south and the proposed land use has peak traffic times on Sunday's.

There are no off site recommendations made for this site.

APPENDIX

Appendix A Traffic Counts and Projections

TURNING MOVEMENT COUNT SUMMARY

MID PEAK HOUR VOLUMES

INTERSECTION:
N-S STREET: **Geneva Road**
E-W STREET: **575 South**

COUNT DATE: **September 22, 2024**
Day of the Week: **Sunday**
NOTES:

COUNT TIME:
FROM: **10:00 AM**
TO: **12:00 PM**

PK HR VOLUME:	974
PHF:	0.91
PEAK HOUR:	
FROM:	TO:
11:00 AM	12:00 PM

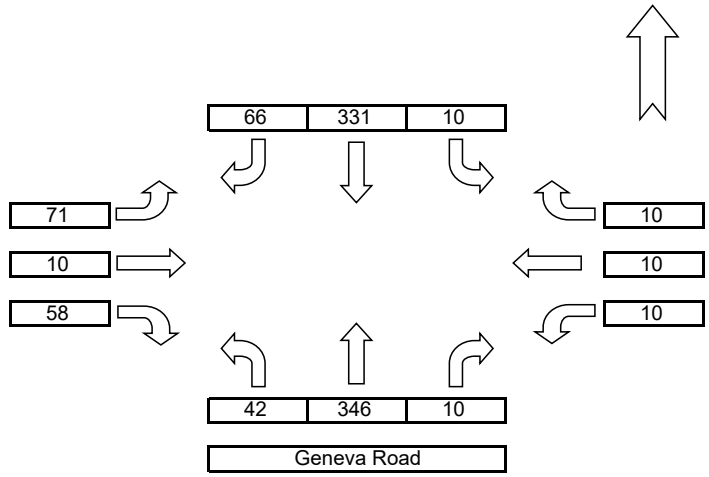

AM Traffic

COUNT DATA INPUT: Name: Jacob Name: Jacob Name: Jacob Name: Jacob

TIME PERIOD		NORTHBOUND			EASTBOUND			SOUTHBOUND			WESTBOUND			TOTAL 15'
FROM:	TO:	L	T	R	L	T	R	L	T	R	L	T	R	VOLUMES
10:00 AM	10:15 AM	10	85	2	17	0	5	3	56	9	0	2	1	190
10:15 AM	10:30 AM	7	90	1	12	2	4	2	99	12	1	1	1	232
10:30 AM	10:45 AM	4	85	3	21	1	9	4	114	9	1	0	2	253
10:45 AM	11:00 AM	0	88	1	7	0	3	3	86	7	2	1	2	200
11:00 AM	11:15 AM	18	86	3	22	2	8	1	67	13	3	2	3	228
11:15 AM	11:30 AM	14	84	3	11	3	18	4	84	15	2	2	4	244
11:30 AM	11:45 AM	6	90	2	22	3	21	3	94	20	2	3	1	267
11:45 AM	12:00 PM	4	86	2	16	2	11	2	86	18	3	3	2	235

			Trip Rate	Trips	In / Out %		Land Use	New		Total	
ITE 11th Edition	Size	Land Use	Sunday Peak	Sun Peak	Sun IN	Sun Out		Sun IN	Sun OUT	Sun IN	Sun OUT
YSA Stake Center	32.713	560	10.36	339	48%	52%	YSA Stake Center	163	176	163	176
Springwater Building	17		10.36	179	48%	52%	Springwater Building	86	93	86	93
Total				**518**			**Total**	**249**	**269**	**249**	**269**

1.26%	Growth Factor	Years
	1.00	0
	1.06	5
	1.38	26

Straight line growth assumed within the study horiz
Source: Traffic on Utah Highways

Road:	Foothill Blvd	
Year	AADT	Growth
2013	12,000	
2014	12,000	0%
2015	12,000	0%
2016	13,000	8%
2017	13,000	0%
2018	13,000	0%
2019	14,000	8%
2020	12,000	-14%
2021	13,000	8%
2022	13,000	0%
Average	14,000	**1.3%**

1 Geneva / 575 South 1.06

	2024	Site	2025	2030	2030
Sunday	Existing	Phase I	Total	Background	Total
EBL	71	94	165	75	169
EBT	10		10	11	11
EBR	58	121	179	61	182
WBL	10		10	11	11
WBT	10		10	11	11
WBR	10		10	11	11
NBL	42	112	154	45	157
NBT	346		346	367	367
NBR	10		10	11	11
SBL	10		10	11	11
SBT	331		331	351	351
SBR	66	87	153	70	157

2. 575 South / Access X

	2024	Site	2025	2030	2030
Sunday	Existing	Phase I	Total	Background	Total
EBL		16	16	0	16
EBT	139	143	282	147	290
EBR			0	0	0
WBL			0	0	0
WBT	118	133	251	125	258
WBR		66	66	0	66
NBL			0	0	0
NBT			0	0	0
NBR			0	0	0
SBL		72	72	0	72
SBT			0	0	0
SBR		18	18	0	18

3. 575 South / Access Y

	2024	Site	2025	2030	2030
Sunday	Existing	Phase I	Total	Background	Total
EBL		10	10	0	10
EBT	139	87	226	147	234
EBR			0	0	0
WBL			0	0	0
WBT	118	84	202	125	209
WBR		67	67	0	67
NBL			0	0	0
NBT			0	0	0
NBR			0	0	0
SBL		72	72	0	72
SBT			0	0	0
SBR		18	18	0	18

4. 575 South / Access Z

	2024	Site	2025	2030	2030
Sunday	Existing	Phase I	Total	Background	Total
EBL		24	24	0	24
EBT	139	26	165	147	173
EBR			0	0	0
WBL			0	0	0
WBT	118	36	154	125	161
WBR		66	66	0	66
NBL			0	0	0
NBT			0	0	0
NBR			0	0	0
SBL		71	71	0	71
SBT			0	0	0
SBR		18	18	0	18

Appendix B Without Site Intersection Analyses

Intersection	
Int Delay, s/veh	3.3

Movement	EBL	EBT	EBR	WBL	WBT	WBR	NBL	NBT	NBR	SBL	SBT	SBR
Lane Configurations												
Traffic Vol, veh/h	71	10	58	10	10	10	42	346	10	10	331	66
Future Vol, veh/h	71	10	58	10	10	10	42	346	10	10	331	66
Conflicting Peds, #/hr	0	0	0	0	0	0	0	0	0	0	0	0
Sign Control	Stop	Stop	Stop	Stop	Stop	Stop	Free	Free	Free	Free	Free	Free
RT Channelized	-	-	None	-	-	None	-	-	None	-	-	None
Storage Length	250	-	-	-	-	-	300	-	-	300	-	-
Veh in Median Storage, #	-	0	-	-	0	-	-	0	-	-	0	-
Grade, %	-	0	-	-	0	-	-	0	-	-	0	-
Peak Hour Factor	92	92	92	92	92	92	92	92	92	92	92	92
Heavy Vehicles, %	2	2	2	2	2	2	2	2	2	2	2	2
Mvmt Flow	77	11	63	11	11	11	46	376	11	11	360	72

Major/Minor	Minor2			Minor1			Major1			Major2		
Conflicting Flow All	704	897	216	682	928	194	432	0	0	387	0	0
Stage 1	418	418	-	474	474	-	-	-	-	-	-	-
Stage 2	286	479	-	208	454	-	-	-	-	-	-	-
Critical Hdwy	7.54	6.54	6.94	7.54	6.54	6.94	4.14	-	-	4.14	-	-
Critical Hdwy Stg 1	6.54	5.54	-	6.54	5.54	-	-	-	-	-	-	-
Critical Hdwy Stg 2	6.54	5.54	-	6.54	5.54	-	-	-	-	-	-	-
Follow-up Hdwy	3.52	4.02	3.32	3.52	4.02	3.32	2.22	-	-	2.22	-	-
Pot Cap-1 Maneuver	324	278	789	336	266	815	1124	-	-	1168	-	-
Stage 1	583	589	-	540	556	-	-	-	-	-	-	-
Stage 2	697	553	-	775	568	-	-	-	-	-	-	-
Platoon blocked, %								-	-		-	-
Mov Cap-1 Maneuver	297	264	789	288	253	815	1124	-	-	1168	-	-
Mov Cap-2 Maneuver	297	264	-	288	253	-	-	-	-	-	-	-
Stage 1	559	584	-	518	533	-	-	-	-	-	-	-
Stage 2	646	530	-	693	563	-	-	-	-	-	-	-

Approach	EB	WB	NB	SB
HCM Control Delay, s	16.6	16.4	0.9	0.2
HCM LOS	C	C		

Minor Lane/Major Mvmt	NBL	NBT	NBR	EBLn1	EBLn2	WBLn1	SBL	SBT	SBR
Capacity (veh/h)	1124	-	-	297	610	347	1168	-	-
HCM Lane V/C Ratio	0.041	-	-	0.26	0.121	0.094	0.009	-	-
HCM Control Delay (s)	8.3	-	-	21.3	11.7	16.4	8.1	-	-
HCM Lane LOS	A	-	-	C	B	C	A	-	-
HCM 95th %tile Q(veh)	0.1	-	-	1	0.4	0.3	0	-	-

Intersection	
Int Delay, s/veh	3.5

Movement	EBL	EBT	EBR	WBL	WBT	WBR	NBL	NBT	NBR	SBL	SBT	SBR
Lane Configurations												
Traffic Vol, veh/h	75	11	61	11	11	11	45	367	11	11	351	157
Future Vol, veh/h	75	11	61	11	11	11	45	367	11	11	351	157
Conflicting Peds, #/hr	0	0	0	0	0	0	0	0	0	0	0	0
Sign Control	Stop	Stop	Stop	Stop	Stop	Stop	Free	Free	Free	Free	Free	Free
RT Channelized	-	-	None	-	-	None	-	-	None	-	-	None
Storage Length	250	-	-	-	-	-	300	-	-	300	-	-
Veh in Median Storage, #	-	0	-	-	0	-	-	0	-	-	0	-
Grade, %	-	0	-	-	0	-	-	0	-	-	0	-
Peak Hour Factor	92	92	92	92	92	92	92	92	92	92	92	92
Heavy Vehicles, %	2	2	2	2	2	2	2	2	2	2	2	2
Mvmt Flow	82	12	66	12	12	12	49	399	12	12	382	171

Major/Minor	Minor2			Minor1			Major1			Major2		
Conflicting Flow All	796	1001	277	724	1080	206	553	0	0	411	0	0
Stage 1	492	492	-	503	503	-	-	-	-	-	-	-
Stage 2	304	509	-	221	577	-	-	-	-	-	-	-
Critical Hdwy	7.54	6.54	6.94	7.54	6.54	6.94	4.14	-	-	4.14	-	-
Critical Hdwy Stg 1	6.54	5.54	-	6.54	5.54	-	-	-	-	-	-	-
Critical Hdwy Stg 2	6.54	5.54	-	6.54	5.54	-	-	-	-	-	-	-
Follow-up Hdwy	3.52	4.02	3.32	3.52	4.02	3.32	2.22	-	-	2.22	-	-
Pot Cap-1 Maneuver	278	241	720	313	217	800	1013	-	-	1144	-	-
Stage 1	527	546	-	519	540	-	-	-	-	-	-	-
Stage 2	681	536	-	761	500	-	-	-	-	-	-	-
Platoon blocked, %								-	-		-	-
Mov Cap-1 Maneuver	250	227	720	261	204	800	1013	-	-	1144	-	-
Mov Cap-2 Maneuver	250	227	-	261	204	-	-	-	-	-	-	-
Stage 1	502	541	-	494	514	-	-	-	-	-	-	-
Stage 2	624	510	-	669	495	-	-	-	-	-	-	-

Approach	EB	WB	NB	SB
HCM Control Delay, s	19.6	18.6	0.9	0.2
HCM LOS	C	C		

Minor Lane/Major Mvmt	NBL	NBT	NBR	EBLn1	EBLn2	WBLn1	SBL	SBT	SBR
Capacity (veh/h)	1013	-	-	250	541	300	1144	-	-
HCM Lane V/C Ratio	0.048	-	-	0.326	0.145	0.12	0.01	-	-
HCM Control Delay (s)	8.7	-	-	26.2	12.8	18.6	8.2	-	-
HCM Lane LOS	A	-	-	D	B	C	A	-	-
HCM 95th %tile Q(veh)	0.2	-	-	1.4	0.5	0.4	0	-	-

Appendix C With Site Intersection Analyses

Intersection	
Int Delay, s/veh	22.5

Movement	EBL	EBT	EBR	WBL	WBT	WBR	NBL	NBT	NBR	SBL	SBT	SBR
Lane Configurations												
Traffic Vol, veh/h	165	10	179	10	10	10	154	346	10	10	331	153
Future Vol, veh/h	165	10	179	10	10	10	154	346	10	10	331	153
Conflicting Peds, #/hr	0	0	0	0	0	0	0	0	0	0	0	0
Sign Control	Stop	Stop	Stop	Stop	Stop	Stop	Free	Free	Free	Free	Free	Free
RT Channelized	-	-	None	-	-	None	-	-	None	-	-	None
Storage Length	250	-	-	-	-	-	300	-	-	300	-	-
Veh in Median Storage, #	-	0	-	-	0	-	-	0	-	-	0	-
Grade, %	-	0	-	-	0	-	-	0	-	-	0	-
Peak Hour Factor	92	92	92	92	92	92	92	92	92	92	92	92
Heavy Vehicles, %	2	2	2	2	2	2	2	2	2	2	2	2
Mvmt Flow	179	11	195	11	11	11	167	376	11	11	360	166

Major/Minor	Minor2			Minor1			Major1			Major2		
Conflicting Flow All	993	1186	263	924	1264	194	526	0	0	387	0	0
Stage 1	465	465	-	716	716	-	-	-	-	-	-	-
Stage 2	528	721	-	208	548	-	-	-	-	-	-	-
Critical Hdwy	7.54	6.54	6.94	7.54	6.54	6.94	4.14	-	-	4.14	-	-
Critical Hdwy Stg 1	6.54	5.54	-	6.54	5.54	-	-	-	-	-	-	-
Critical Hdwy Stg 2	6.54	5.54	-	6.54	5.54	-	-	-	-	-	-	-
Follow-up Hdwy	3.52	4.02	3.32	3.52	4.02	3.32	2.22	-	-	2.22	-	-
Pot Cap-1 Maneuver	200	187	735	224	168	815	1037	-	-	1168	-	-
Stage 1	547	561	-	387	432	-	-	-	-	-	-	-
Stage 2	502	430	-	775	515	-	-	-	-	-	-	-
Platoon blocked, %								-	-		-	-
Mov Cap-1 Maneuver	~ 162	155	735	136	140	815	1037	-	-	1168	-	-
Mov Cap-2 Maneuver	~ 162	155	-	136	140	-	-	-	-	-	-	-
Stage 1	459	556	-	325	362	-	-	-	-	-	-	-
Stage 2	403	361	-	553	510	-	-	-	-	-	-	-

Approach	EB	WB	NB	SB
HCM Control Delay, s	81.6	27.7	2.8	0.2
HCM LOS	F	D		

Minor Lane/Major Mvmt	NBL	NBT	NBR	EBLn1	EBLn2	WBLn1	SBL	SBT	SBR
Capacity (veh/h)	1037	-	-	162	614	191	1168	-	-
HCM Lane V/C Ratio	0.161	-	-	1.107	0.335	0.171	0.009	-	-
HCM Control Delay (s)	9.1	-	-	159.3	13.8	27.7	8.1	-	-
HCM Lane LOS	A	-	-	F	B	D	A	-	-
HCM 95th %tile Q(veh)	0.6	-	-	9.4	1.5	0.6	0	-	-

Notes			
~: Volume exceeds capacity	$: Delay exceeds 300s	+: Computation Not Defined	*: All major volume in platoon

Intersection	
Int Delay, s/veh	2

Movement	EBL	EBT	WBT	WBR	SBL	SBR
Lane Configurations						
Traffic Vol, veh/h	16	282	251	66	72	18
Future Vol, veh/h	16	282	251	66	72	18
Conflicting Peds, #/hr	0	0	0	0	0	0
Sign Control	Free	Free	Free	Free	Stop	Stop
RT Channelized	-	None	-	None	-	None
Storage Length	100	-	-	-	0	-
Veh in Median Storage, #	-	0	0	-	0	-
Grade, %	-	0	0	-	0	-
Peak Hour Factor	92	92	92	92	92	92
Heavy Vehicles, %	2	2	2	2	2	2
Mvmt Flow	17	307	273	72	78	20

Major/Minor	Major1		Major2		Minor2	
Conflicting Flow All	345	0	-	0	650	309
Stage 1	-	-	-	-	309	-
Stage 2	-	-	-	-	341	-
Critical Hdwy	4.12	-	-	-	6.42	6.22
Critical Hdwy Stg 1	-	-	-	-	5.42	-
Critical Hdwy Stg 2	-	-	-	-	5.42	-
Follow-up Hdwy	2.218	-	-	-	3.518	3.318
Pot Cap-1 Maneuver	1214	-	-	-	434	731
Stage 1	-	-	-	-	745	-
Stage 2	-	-	-	-	720	-
Platoon blocked, %			-	-		
Mov Cap-1 Maneuver	1214	-	-	-	428	731
Mov Cap-2 Maneuver	-	-	-	-	428	-
Stage 1	-	-	-	-	735	-
Stage 2	-	-	-	-	720	-

Approach	EB	WB	SB
HCM Control Delay, s	0.4	0	14.7
HCM LOS			B

Minor Lane/Major Mvmt	EBL	EBT	WBT	WBR	SBLn1
Capacity (veh/h)	1214	-	-	-	467
HCM Lane V/C Ratio	0.014	-	-	-	0.209
HCM Control Delay (s)	8	-	-	-	14.7
HCM Lane LOS	A	-	-	-	B
HCM 95th %tile Q(veh)	0	-	-	-	0.8

Intersection	
Int Delay, s/veh	1.9

Movement	EBL	EBT	WBT	WBR	SBL	SBR
Lane Configurations						
Traffic Vol, veh/h	10	226	202	67	72	18
Future Vol, veh/h	10	226	202	67	72	18
Conflicting Peds, #/hr	0	0	0	0	0	0
Sign Control	Free	Free	Free	Free	Stop	Stop
RT Channelized	-	None	-	None	-	None
Storage Length	100	-	-	-	0	-
Veh in Median Storage, #	-	0	0	-	0	-
Grade, %	-	0	0	-	0	-
Peak Hour Factor	92	92	92	92	92	92
Heavy Vehicles, %	2	2	2	2	2	2
Mvmt Flow	11	246	220	73	78	20

Major/Minor	Major1		Major2		Minor2	
Conflicting Flow All	293	0	-	0	525	257
Stage 1	-	-	-	-	257	-
Stage 2	-	-	-	-	268	-
Critical Hdwy	4.12	-	-	-	6.42	6.22
Critical Hdwy Stg 1	-	-	-	-	5.42	-
Critical Hdwy Stg 2	-	-	-	-	5.42	-
Follow-up Hdwy	2.218	-	-	-	3.518	3.318
Pot Cap-1 Maneuver	1269	-	-	-	513	782
Stage 1	-	-	-	-	786	-
Stage 2	-	-	-	-	777	-
Platoon blocked, %		-	-	-		
Mov Cap-1 Maneuver	1269	-	-	-	508	782
Mov Cap-2 Maneuver	-	-	-	-	587	-
Stage 1	-	-	-	-	779	-
Stage 2	-	-	-	-	777	-

Approach	EB	WB	SB
HCM Control Delay, s	0.3	0	11.9
HCM LOS			B

Minor Lane/Major Mvmt	EBL	EBT	WBT	WBR	SBLn1
Capacity (veh/h)	1269	-	-	-	618
HCM Lane V/C Ratio	0.009	-	-	-	0.158
HCM Control Delay (s)	7.9	-	-	-	11.9
HCM Lane LOS	A	-	-	-	B
HCM 95th %tile Q(veh)	0	-	-	-	0.6

Intersection	
Int Delay, s/veh	2.5

Movement	EBL	EBT	WBT	WBR	SBL	SBR
Lane Configurations						
Traffic Vol, veh/h	24	165	154	66	71	18
Future Vol, veh/h	24	165	154	66	71	18
Conflicting Peds, #/hr	0	0	0	0	0	0
Sign Control	Free	Free	Free	Free	Stop	Stop
RT Channelized	-	None	-	None	-	None
Storage Length	100	-	-	-	0	-
Veh in Median Storage, #	-	0	0	-	0	-
Grade, %	-	0	0	-	0	-
Peak Hour Factor	92	92	92	92	92	92
Heavy Vehicles, %	2	2	2	2	2	2
Mvmt Flow	26	179	167	72	77	20

Major/Minor	Major1		Major2		Minor2	
Conflicting Flow All	239	0	-	0	434	203
Stage 1	-	-	-	-	203	-
Stage 2	-	-	-	-	231	-
Critical Hdwy	4.12	-	-	-	6.42	6.22
Critical Hdwy Stg 1	-	-	-	-	5.42	-
Critical Hdwy Stg 2	-	-	-	-	5.42	-
Follow-up Hdwy	2.218	-	-	-	3.518	3.318
Pot Cap-1 Maneuver	1328	-	-	-	579	838
Stage 1	-	-	-	-	831	-
Stage 2	-	-	-	-	807	-
Platoon blocked, %		-	-	-		
Mov Cap-1 Maneuver	1328	-	-	-	567	838
Mov Cap-2 Maneuver	-	-	-	-	567	-
Stage 1	-	-	-	-	814	-
Stage 2	-	-	-	-	807	-

Approach	EB	WB	SB
HCM Control Delay, s	1	0	12.1
HCM LOS			B

Minor Lane/Major Mvmt	EBL	EBT	WBT	WBR	SBLn1
Capacity (veh/h)	1328	-	-	-	607
HCM Lane V/C Ratio	0.02	-	-	-	0.159
HCM Control Delay (s)	7.8	-	-	-	12.1
HCM Lane LOS	A	-	-	-	B
HCM 95th %tile Q(veh)	0.1	-	-	-	0.6

Intersection	
Int Delay, s/veh	28.9

Movement	EBL	EBT	EBR	WBL	WBT	WBR	NBL	NBT	NBR	SBL	SBT	SBR
Lane Configurations												
Traffic Vol, veh/h	169	11	182	11	11	11	157	367	11	11	351	157
Future Vol, veh/h	169	11	182	11	11	11	157	367	11	11	351	157
Conflicting Peds, #/hr	0	0	0	0	0	0	0	0	0	0	0	0
Sign Control	Stop	Stop	Stop	Stop	Stop	Stop	Free	Free	Free	Free	Free	Free
RT Channelized	-	-	None	-	-	None	-	-	None	-	-	None
Storage Length	250	-	-	-	-	-	300	-	-	300	-	-
Veh in Median Storage, #	-	0	-	-	0	-	-	0	-	-	0	-
Grade, %	-	0	-	-	0	-	-	0	-	-	0	-
Peak Hour Factor	92	92	92	92	92	92	92	92	92	92	92	92
Heavy Vehicles, %	2	2	2	2	2	2	2	2	2	2	2	2
Mvmt Flow	184	12	198	12	12	12	171	399	12	12	382	171

Major/Minor	Minor2			Minor1			Major1			Major2		
Conflicting Flow All	1040	1245	277	968	1324	206	553	0	0	411	0	0
Stage 1	492	492	-	747	747	-	-	-	-	-	-	-
Stage 2	548	753	-	221	577	-	-	-	-	-	-	-
Critical Hdwy	7.54	6.54	6.94	7.54	6.54	6.94	4.14	-	-	4.14	-	-
Critical Hdwy Stg 1	6.54	5.54	-	6.54	5.54	-	-	-	-	-	-	-
Critical Hdwy Stg 2	6.54	5.54	-	6.54	5.54	-	-	-	-	-	-	-
Follow-up Hdwy	3.52	4.02	3.32	3.52	4.02	3.32	2.22	-	-	2.22	-	-
Pot Cap-1 Maneuver	185	173	720	208	155	800	1013	-	-	1144	-	-
Stage 1	527	546	-	371	418	-	-	-	-	-	-	-
Stage 2	488	416	-	761	500	-	-	-	-	-	-	-
Platoon blocked, %								-	-		-	-
Mov Cap-1 Maneuver	~ 147	142	720	122	128	800	1013	-	-	1144	-	-
Mov Cap-2 Maneuver	~ 147	142	-	122	128	-	-	-	-	-	-	-
Stage 1	438	541	-	308	347	-	-	-	-	-	-	-
Stage 2	386	346	-	534	495	-	-	-	-	-	-	-

Approach	EB	WB	NB	SB
HCM Control Delay, s	108.5	31	2.7	0.2
HCM LOS	F	D		

Minor Lane/Major Mvmt	NBL	NBT	NBR	EBLn1	EBLn2	WBLn1	SBL	SBT	SBR
Capacity (veh/h)	1013	-	-	147	584	174	1144	-	-
HCM Lane V/C Ratio	0.168	-	-	1.25	0.359	0.206	0.01	-	-
HCM Control Delay (s)	9.3	-	-	215.8	14.6	31	8.2	-	-
HCM Lane LOS	A	-	-	F	B	D	A	-	-
HCM 95th %tile Q(veh)	0.6	-	-	10.9	1.6	0.7	0	-	-

Notes			
~: Volume exceeds capacity	$: Delay exceeds 300s	+: Computation Not Defined	*: All major volume in platoon

Intersection	
Int Delay, s/veh	2

Movement	EBL	EBT	WBT	WBR	SBL	SBR
Lane Configurations						
Traffic Vol, veh/h	16	282	251	66	72	18
Future Vol, veh/h	16	282	251	66	72	18
Conflicting Peds, #/hr	0	0	0	0	0	0
Sign Control	Free	Free	Free	Free	Stop	Stop
RT Channelized	-	None	-	None	-	None
Storage Length	100	-	-	-	0	-
Veh in Median Storage, #	-	0	0	-	0	-
Grade, %	-	0	0	-	0	-
Peak Hour Factor	92	92	92	92	92	92
Heavy Vehicles, %	2	2	2	2	2	2
Mvmt Flow	17	307	273	72	78	20

Major/Minor	Major1		Major2		Minor2	
Conflicting Flow All	345	0	-	0	650	309
Stage 1	-	-	-	-	309	-
Stage 2	-	-	-	-	341	-
Critical Hdwy	4.12	-	-	-	6.42	6.22
Critical Hdwy Stg 1	-	-	-	-	5.42	-
Critical Hdwy Stg 2	-	-	-	-	5.42	-
Follow-up Hdwy	2.218	-	-	-	3.518	3.318
Pot Cap-1 Maneuver	1214	-	-	-	434	731
Stage 1	-	-	-	-	745	-
Stage 2	-	-	-	-	720	-
Platoon blocked, %			-	-	-	
Mov Cap-1 Maneuver	1214	-	-	-	428	731
Mov Cap-2 Maneuver	-	-	-	-	428	-
Stage 1	-	-	-	-	735	-
Stage 2	-	-	-	-	720	-

Approach	EB	WB	SB
HCM Control Delay, s	0.4	0	14.7
HCM LOS			B

Minor Lane/Major Mvmt	EBL	EBT	WBT	WBR	SBLn1
Capacity (veh/h)	1214	-	-	-	467
HCM Lane V/C Ratio	0.014	-	-	-	0.209
HCM Control Delay (s)	8	-	-	-	14.7
HCM Lane LOS	A	-	-	-	B
HCM 95th %tile Q(veh)	0	-	-	-	0.8

Intersection	
Int Delay, s/veh	1.9

Movement	EBL	EBT	WBT	WBR	SBL	SBR
Lane Configurations						
Traffic Vol, veh/h	10	226	202	67	72	18
Future Vol, veh/h	10	226	202	67	72	18
Conflicting Peds, #/hr	0	0	0	0	0	0
Sign Control	Free	Free	Free	Free	Stop	Stop
RT Channelized	-	None	-	None	-	None
Storage Length	100	-	-	-	0	-
Veh in Median Storage, #	-	0	0	-	0	-
Grade, %	-	0	0	-	0	-
Peak Hour Factor	92	92	92	92	92	92
Heavy Vehicles, %	2	2	2	2	2	2
Mvmt Flow	11	246	220	73	78	20

Major/Minor	Major1		Major2		Minor2	
Conflicting Flow All	293	0	-	0	525	257
Stage 1	-	-	-	-	257	-
Stage 2	-	-	-	-	268	-
Critical Hdwy	4.12	-	-	-	6.42	6.22
Critical Hdwy Stg 1	-	-	-	-	5.42	-
Critical Hdwy Stg 2	-	-	-	-	5.42	-
Follow-up Hdwy	2.218	-	-	-	3.518	3.318
Pot Cap-1 Maneuver	1269	-	-	-	513	782
Stage 1	-	-	-	-	786	-
Stage 2	-	-	-	-	777	-
Platoon blocked, %		-	-	-		
Mov Cap-1 Maneuver	1269	-	-	-	508	782
Mov Cap-2 Maneuver	-	-	-	-	587	-
Stage 1	-	-	-	-	779	-
Stage 2	-	-	-	-	777	-

Approach	EB	WB	SB
HCM Control Delay, s	0.3	0	11.9
HCM LOS			B

Minor Lane/Major Mvmt	EBL	EBT	WBT	WBR	SBLn1
Capacity (veh/h)	1269	-	-	-	618
HCM Lane V/C Ratio	0.009	-	-	-	0.158
HCM Control Delay (s)	7.9	-	-	-	11.9
HCM Lane LOS	A	-	-	-	B
HCM 95th %tile Q(veh)	0	-	-	-	0.6

Intersection	
Int Delay, s/veh	2.5

Movement	EBL	EBT	WBT	WBR	SBL	SBR
Lane Configurations						
Traffic Vol, veh/h	24	173	161	66	71	18
Future Vol, veh/h	24	173	161	66	71	18
Conflicting Peds, #/hr	0	0	0	0	0	0
Sign Control	Free	Free	Free	Free	Stop	Stop
RT Channelized	-	None	-	None	-	None
Storage Length	100	-	-	-	0	-
Veh in Median Storage, #	-	0	0	-	0	-
Grade, %	-	0	0	-	0	-
Peak Hour Factor	92	92	92	92	92	92
Heavy Vehicles, %	2	2	2	2	2	2
Mvmt Flow	26	188	175	72	77	20

Major/Minor	Major1		Major2		Minor2	
Conflicting Flow All	247	0	-	0	451	211
Stage 1	-	-	-	-	211	-
Stage 2	-	-	-	-	240	-
Critical Hdwy	4.12	-	-	-	6.42	6.22
Critical Hdwy Stg 1	-	-	-	-	5.42	-
Critical Hdwy Stg 2	-	-	-	-	5.42	-
Follow-up Hdwy	2.218	-	-	-	3.518	3.318
Pot Cap-1 Maneuver	1319	-	-	-	566	829
Stage 1	-	-	-	-	824	-
Stage 2	-	-	-	-	800	-
Platoon blocked, %			-	-	-	
Mov Cap-1 Maneuver	1319	-	-	-	555	829
Mov Cap-2 Maneuver	-	-	-	-	555	-
Stage 1	-	-	-	-	808	-
Stage 2	-	-	-	-	800	-

Approach	EB	WB	SB
HCM Control Delay, s	0.9	0	12.2
HCM LOS			B

Minor Lane/Major Mvmt	EBL	EBT	WBT	WBR	SBLn1
Capacity (veh/h)	1319	-	-	-	595
HCM Lane V/C Ratio	0.02	-	-	-	0.163
HCM Control Delay (s)	7.8	-	-	-	12.2
HCM Lane LOS	A	-	-	-	B
HCM 95th %tile Q(veh)	0.1	-	-	-	0.6

STAFF REPORT

Meeting Date: February 20, 2025

Agenda Item: Site Plan with Conditional Use Permit - Church Meetinghouse at 1700 W 575 S (East Building)

Department:

Presenter: Anthony Fletcher

Background/Discussion:

The applicant, representing the Church of Jesus Christ of Latter Day Saints has applied for a site plan with conditional use permit. The entire project involves two church meetinghouses with two separate building permits applications. This application is for a church building location on the east side of the land parcel 39:228:0001. The meetinghouse will be 18,298 square feet and have an occupancy of 255 people in the chapel. The east building lot designation is located on both the R&A-5 zone and RC Zone. Religious institutions are outrightly permitted within the RC zone and allowed through a conditional use permit in the R&A-5 zone.

There is a total of 231 parking spaces provided, which exceeds the minimum requirement of 64 parking spaces. There is a total of 8 bike parking spots (i.e., 4 racks), which meets the minimum requirement.

The building roof has a total height under the allowed height of 35' excluding the steeple. The Vineyard Zoning Code 15.32.120 excludes the steeple being considered as part of the building height.

The landscaping of the project will be 26.2% of the total square footage, with 8.7% (i.e., 13,847 sf.) of the landscaping being turf. The site plan proposed 117 trees and 627 shrubs/ other plants. This meets the minimum required landscaping requirements.

The elevations provided for the building show the finishing to be with brickwork, stonework, metal, and glass, which are all permitted materials in Vineyard City.

This site plan and conditional use permit meet all the requirements of the Vineyard Zoning Code.

Fiscal Impact:

Recommendation:

Staff recommends that the Development Review Committee provide inputs or share concerns/ conditions that may be required before recommending approval of the site plan with conditional use permit to the Planning Commission.

Sample Motion:

"I move to recommend approval of the site plan with conditional use permit to the Planning Commission with the proposed conditions as discussed by DRC..."

Attachments:

1. Traffic_Study_2024.09.30.
2. Updated Site plan 1.26.2025
3. Springwater_project_narrative
4. Site Plan Details 1.29.2025
5. Construction Plans _2024.08.15
6. Landscape_Drawings
7. Alta Survey
8. Title report

Orem YSA 3rd / 10 Ward Stake Center

750 East 575 South Traffic Impact Study

Vineyard, Utah

September 2024

TRAFFIC STUDY

TRANSPORTATION ENGINEERING

A-Trans Engineering
P.O. Box 521651
Salt Lake City, Utah 84152
(801) 949-0348 Phone

Orem YSA 3rd / 10 Ward Stake Center

750 East 575 South Traffic Impact Analysis

Vineyard, Utah

Category II

September 2024

Prepared by:

A-Trans Engineering, LLC
Joseph Perrin, PhD, PE, PTOE
P.O. Box City, 521651
Salt Lake City, Utah 84152
(801) 949-0348
atrans@comcast.net

Table of Contents

I. Introduction and Summary 1

II. Proposed Project 2

III. Study Area Conditions 4

IV. Analysis of Existing Condition 7

V. Projected Traffic 9

VI. Growth 13

VII. Traffic Analysis 17

VIII. Conclusions 19

Table of Figures

Figure 1: Conceptual Site Plan 3

Figure 2: Site Location 5

Figure 3: Existing Geometry 6

Figure 4: Existing Traffic 8

Figure 5: Origin Destination 11

Figure 6: Site Trip Distribution 12

Figure 7: 2030 Background Traffic 14

Figure 8: 2025 Total Traffic 15

Figure 9: 2030 Total Traffic 16

Table of Tables

Table 1: Analysis Results and Summary 1

Table 2: Intersection LOS-Delay Relationship 7

Table 3: Existing Level of Service 7

Table 4: Trip Generation for Site 9

Table 5: Analysis Results 17

Table 6: Geneva Road / 575 South Intersection Analysis 18

Table 7: Geneva Road / Access X Analysis 18

Table 8: Geneva Road / Access Y Analysis 18

Table 9: Geneva Road / Access Z Analysis 18

I. Introduction and Summary

This traffic impact analysis is for the proposed Orem YSA 3rd and 10 ward stake center development located at 750 East 575 South on the northwest corner of Geneva Road and 575 South in Vineyard, Utah. The site is planned to include a 32,713 square foot stake center and a 17,000 square foot meetinghouse. Because the site is a chapel, Sunday is the peak period and is projected to generate 249 inbound and 269 outbound Sunday peak hour trips. The site is proposing three accesses on 575 South.

Table 1 shows the results of the analysis.

Table 1: Analysis Results and Summary

		2024 Existing	2025 Total	2030 Background	2030 Total
Geneva Road / 575 South	SUNDAY	EBL side street delay at 21.3/C	EBL side street delay at >100/F	EBL side street delay at 26.2/D	EBL side street delay at >100/F
575 South / Access X	SUNDAY		Access SBL egress at 14.7/B		Access SBL egress maintained at 14.7/B
575 South / Access Y	SUNDAY		Access SBL egress at 11.9/B		Access SBL egress maintained at 11.9/B
575 South / Access Z	SUNDAY		Access SBL egress at 12.1/B		Access SBL egress at 12.2/B

Recommendations: No auxiliary lanes are recommended for this development.

II. Proposed Project

The site is planning three accesses on 575 South. The eastern access X is located approximately 360 feet west of Geneva Road, the middle access Y is located approximately 202 feet west of access X, and the western access Z is located approximately 248' west of access Y and 550' east of 1800 West. Accesses are measured from center to center.

The proposed conceptual site plan and access spacing are shown in Figure 1.

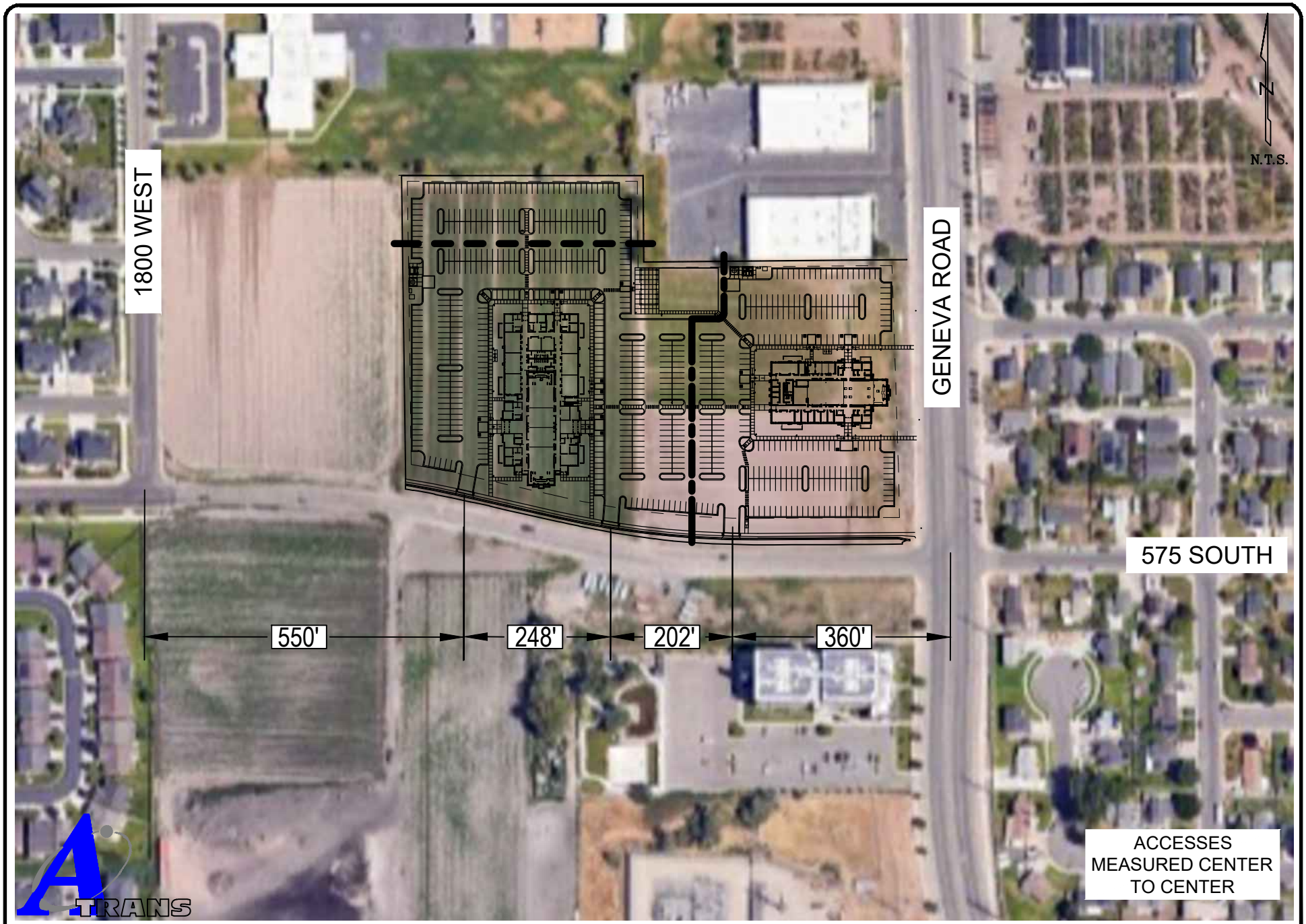

A-TRANS TRANSPORTATION ENGINEERING
P.O. BOX 521651, SLC, UT 84152
Phone: 801-949-0348 Fax: 801-582-6252

Figure 1

Conceptual Site Plan

III. Study Area Conditions

The study area includes the following intersection.

- Geneva Road / 575 South

Figure 2 shows the location of the site. Figure 3 shows existing intersection geometry.

Geneva Road
Geneva Road (SR 114) is a 5 lane facility with two lanes in each direction and a center turn lane and shoulder with a bike lane on each side. The 2023 AADT is 14,000 vehicles per day with a posted speed limit of 45 MPH. UDOT classifies Geneva Road as a Category 5 roadway.

575 South
575 South (RT 2977) is a 2 lane facility with one lane in each direction. The 2023 AADT is 510 vehicles per day with a posted speed limit of 30 MPH.

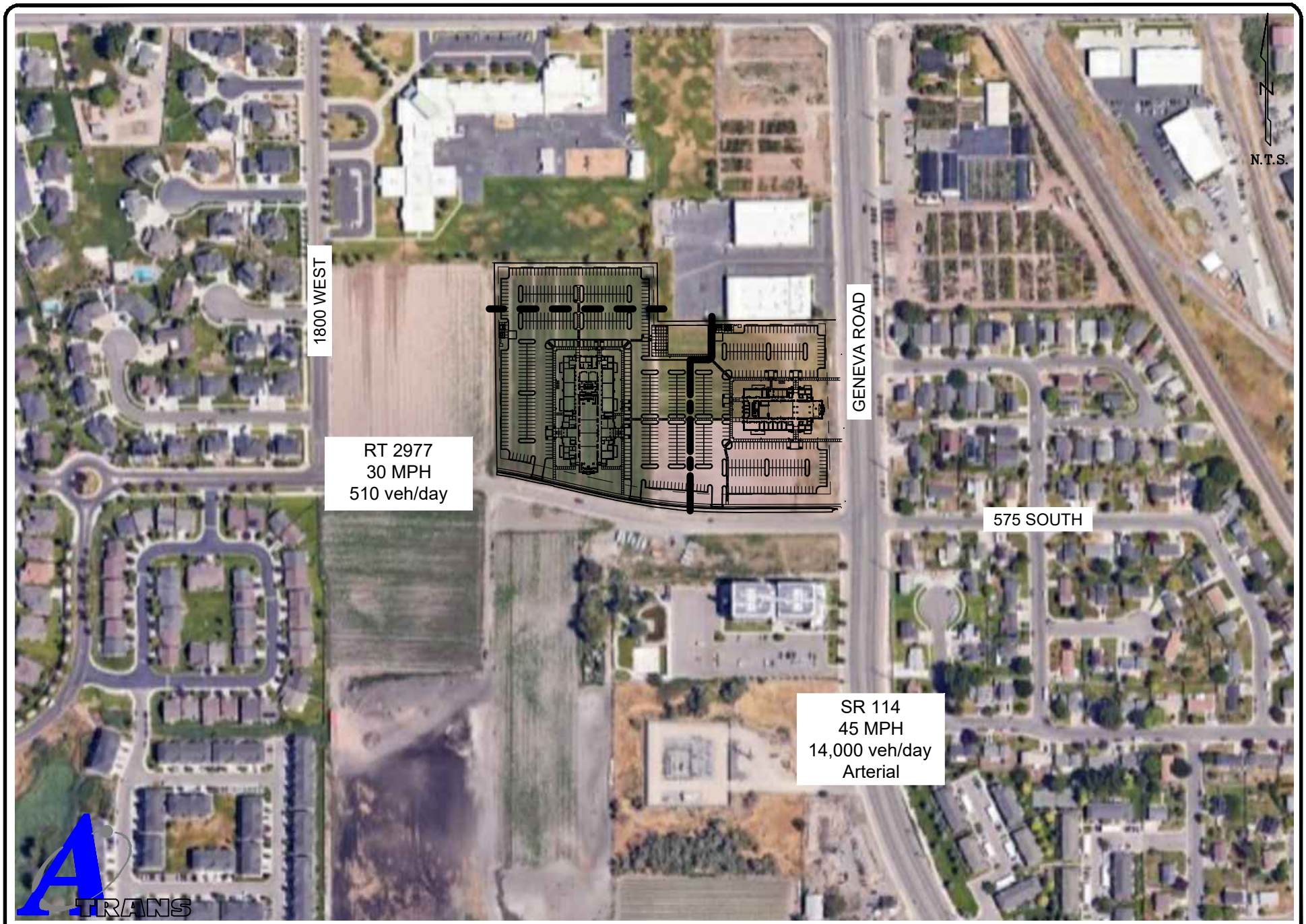

A-TRANS TRANSPORTATION ENGINEERING P.O. BOX 521651, SLC, UT 84152 Phone: 801-949-0348 Fax: 801-582-6252	Figure 2	Site Location

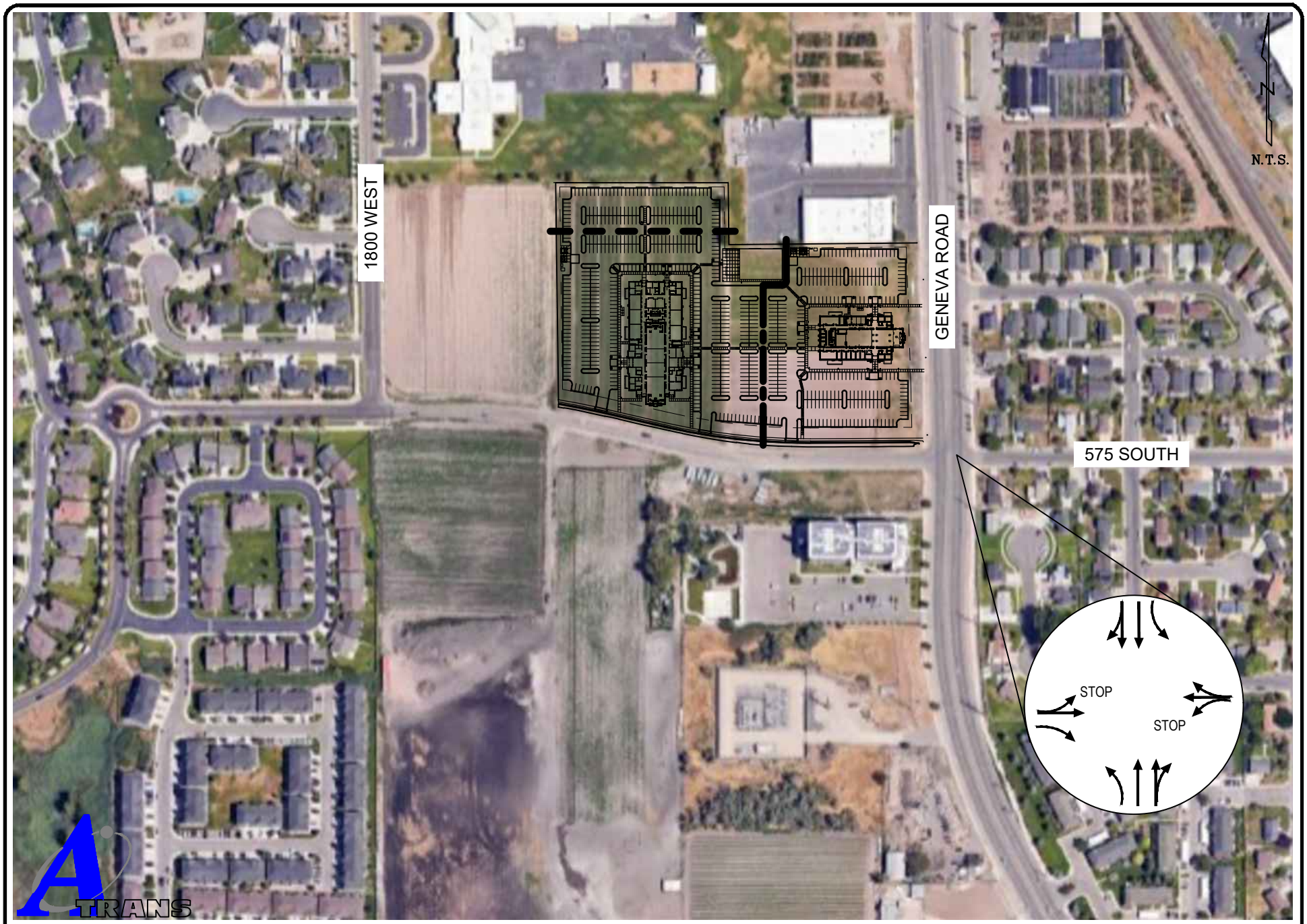

A-TRANS TRANSPORTATION ENGINEERING P.O. BOX 521651, SLC, UT 84152 Phone: 801-949-0348 Fax: 801-582-6252	Figure 3	Existing Geometry

IV. Analysis of Existing Condition

The existing traffic counts were performed September 22, 2023 during the assumed Sunday peak period (10:00AM – 12:00 PM). 2024 Sunday Existing Traffic volumes are shown in Figure 4.

The Highway Capacity Manual defines the Level of Service (LOS) for both signalized and unsignalized intersections as a range of average experienced delay. LOS is a qualitative rating of traveler satisfaction from A to F whereby LOS A is good and LOS F poor. Table 2 shows the LOS range by delay for unsignalized and signalized intersections and accesses.

Table 2: Intersection LOS-Delay Relationship

	Unsignalized	Signalized
Level of Service	Total Delay per Vehicle (sec)	Total Delay per Vehicle (sec)
A	$\leq$ 10.0	$\leq$ 10.0
B	> 10.0 and $\leq$ 15.0	> 10.0 and $\leq$ 20.0
C	> 15.0 and $\leq$ 25.0	> 20.0 and $\leq$ 35.0
D	> 25.0 and $\leq$ 35.0	> 35.0 and $\leq$ 55.0
E	> 35.0 and $\leq$ 50.0	> 55.0 and $\leq$ 80.0
F	> 50.0	> 80.0

The analysis shows that Geneva Road / 575 South operates with side street delay at LOS C for the Sunday peak period. Table 3 shows the Existing LOS.

Table 3: Existing Level of Service

	Geneva Road / 575 South (EBL)	
Sunday	21.3	C

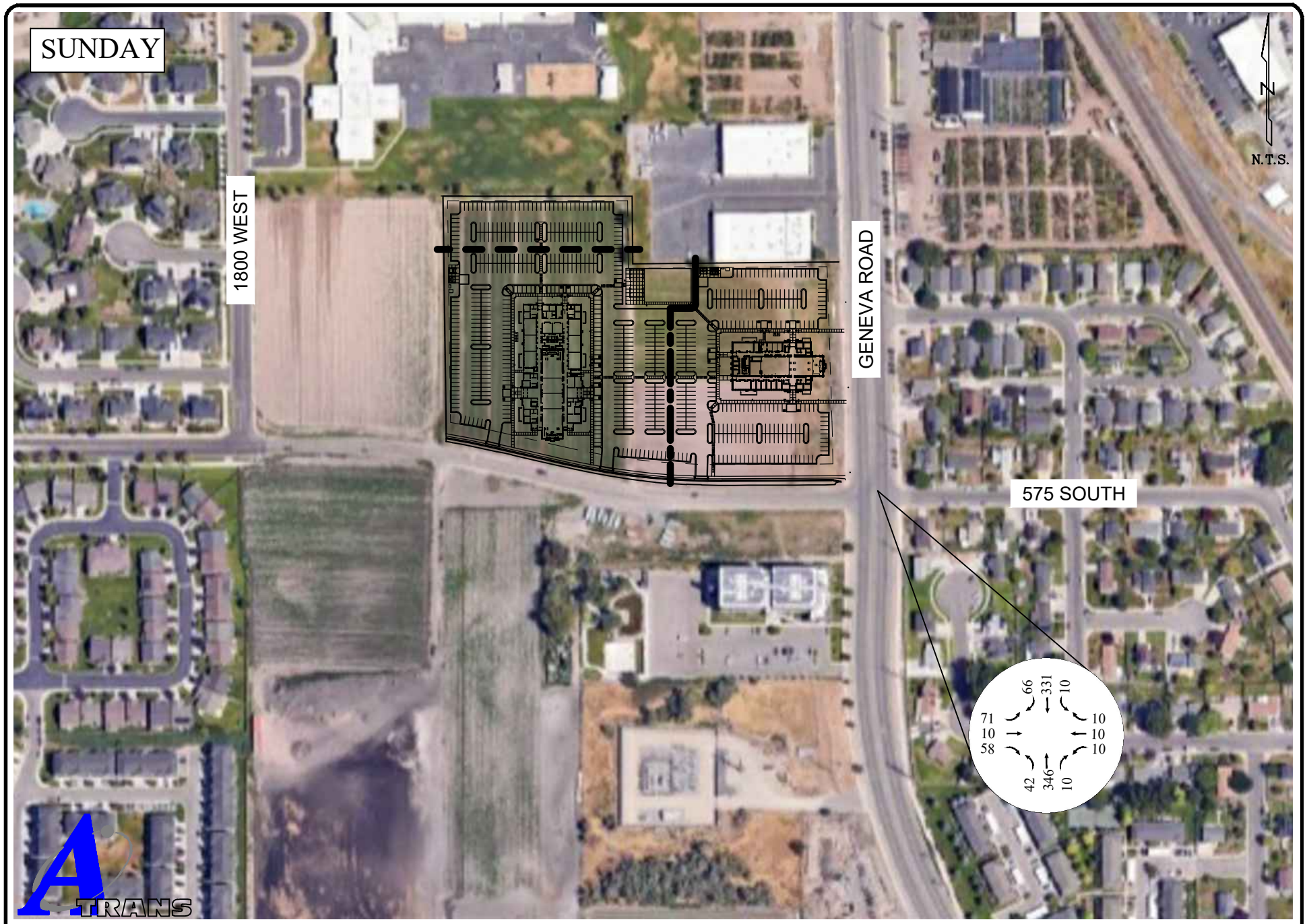

A-TRANS TRANSPORTATION ENGINEERING P.O. BOX 521651, SLC, UT 84152 Phone: 801-949-0348 Fax: 801-582-6252	Figure 4	Existing Traffic

V. Projected Traffic

A. Trip Generation

Trip generation for the site was done using The Institute of Transportation Engineers (ITE) *Trip Generation* (11th Edition) handbook. The site is a 32,713 square foot stake center and a 17,000 square foot meetinghouse. The site is projected to generate 518 peak hour trips. The trip generation for the site is shown in Table 4.

The 2-hour session will happen approximately three times during the Sunday as the 9:00 AM, 10:30 AM and noon start times allow for an overlap of two wards at the church at a time. But since the start (entrance) and ending (exit) times are temporally separated by 30 minutes, this allows for much better traffic flow.

Table 4: Trip Generation for Site

Land Use Type	Density	Land Use #	Trip Rate	Trips	% In	% Out	Trips In	Trips Out
Sunday								
Chapel	32,713 sf	560	10.36	339	48%	52%	163	176
Chapel	17,000 sf	560	10.36	179	48%	52%	86	93
Total								
				518			**249**	**269**

B. Trip Distribution

Origin-destination was determined from evaluating the location of neighboring residential development as well as the existing traffic patterns of trips at the counted intersections. This was used as a baseline for origin destination and engineering judgment was applied to this to determine the following OD for the site.

- 35% to/from north on Geneva Road
- 45% to/from south on Geneva Road
- 20% to/from west on 575 South

Origin Destination is shown in Figure 5. Site trip distribution is shown in Figure 6.

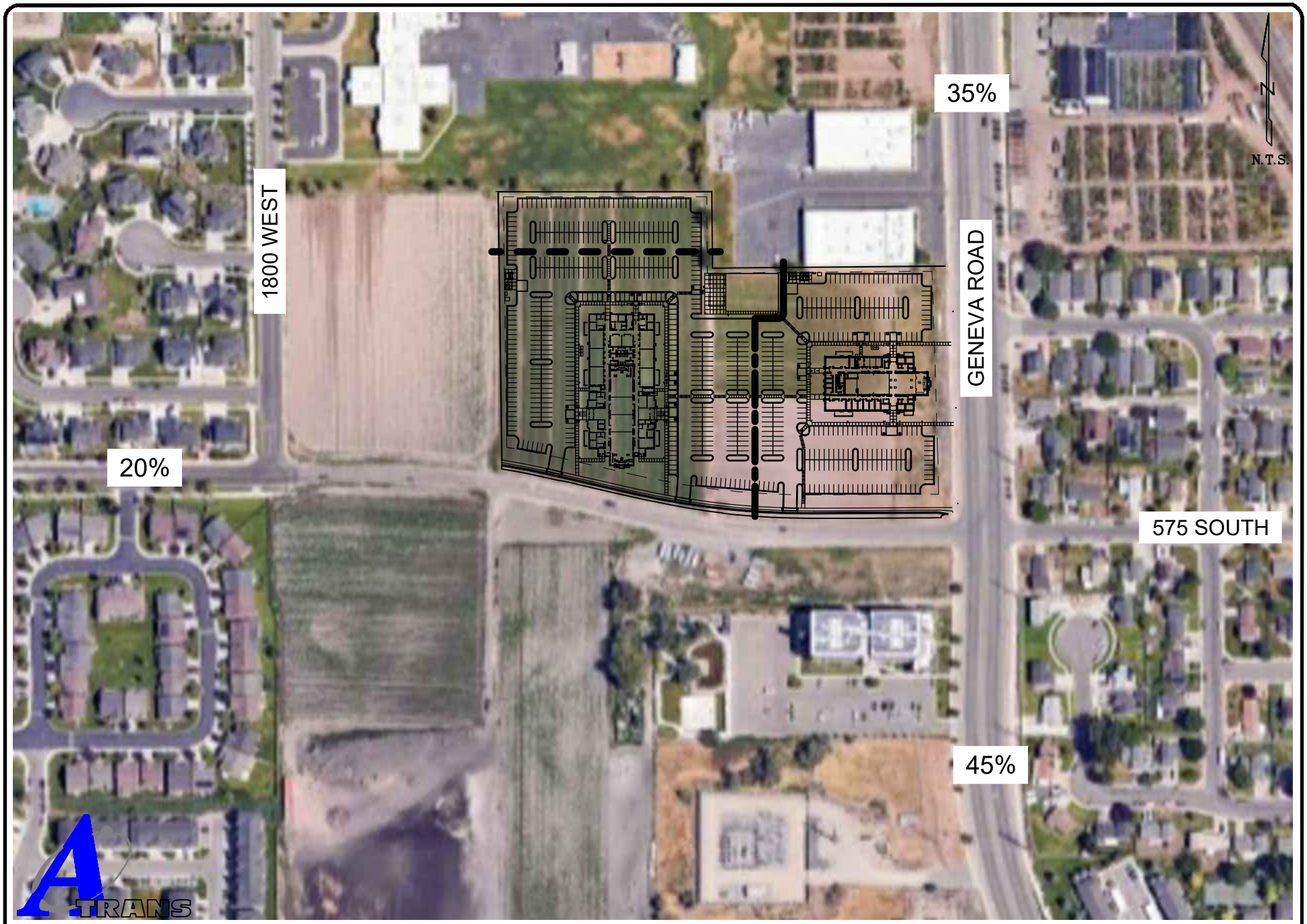

A-TRANS TRANSPORTATION ENGINEERING
P.O. BOX 521651, SLC, UT 84152
Phone: 801-949-0348 Fax: 801-582-6252

Figure 5

Origin Destination

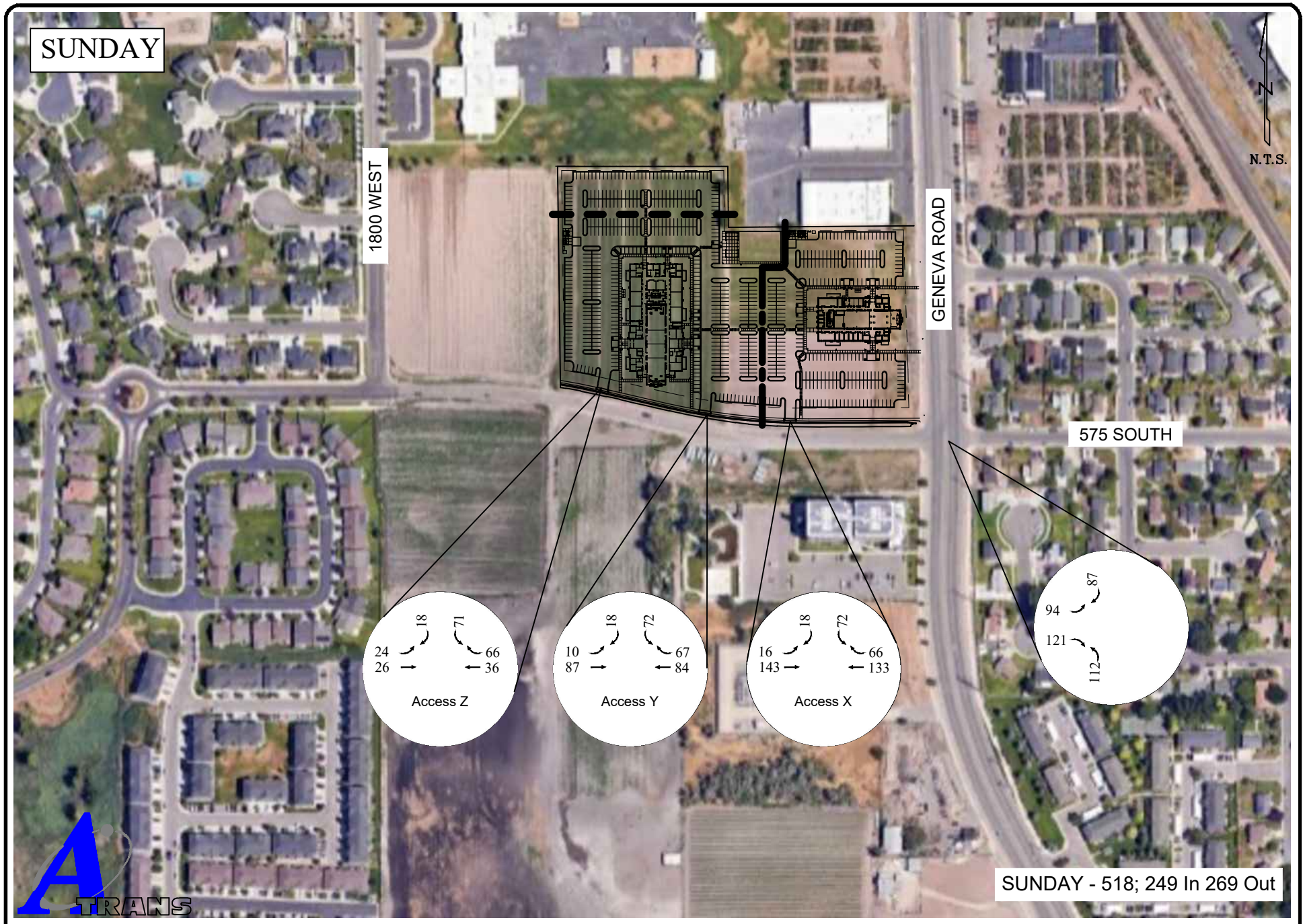

A-TRANS TRANSPORTATION ENGINEERING P.O. BOX 521651, SLC, UT 84152 Phone: 801-949-0348 Fax: 801-582-6252	Figure 6	Site Trip Distribution

VI. Growth

Growth in the area was determined from UDOT's Traffic on Utah Highways and projections from WFRC. Based on this data an average growth of 1.26% is assumed. The 2030 growth factor is 1.06.

2030 Background Traffic is shown in Figure 7. 2025 Total Traffic is shown in Figure 8 and 2030 Total Traffic is shown in Figure 9.

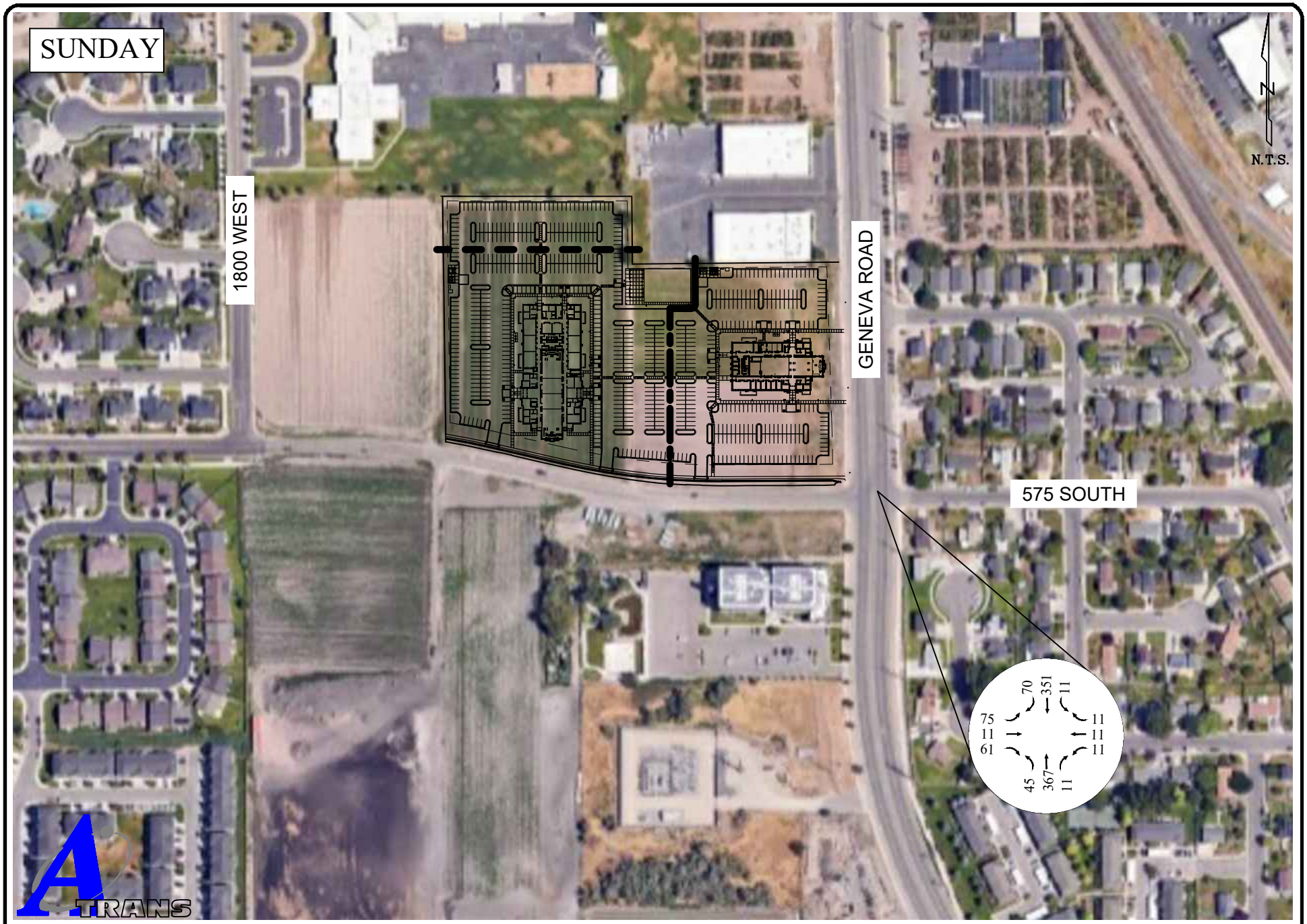

A-TRANS TRANSPORTATION ENGINEERING P.O. BOX 521651, SLC, UT 84152 Phone: 801-949-0348 Fax: 801-582-6252	Figure 7	2030 Background Traffic

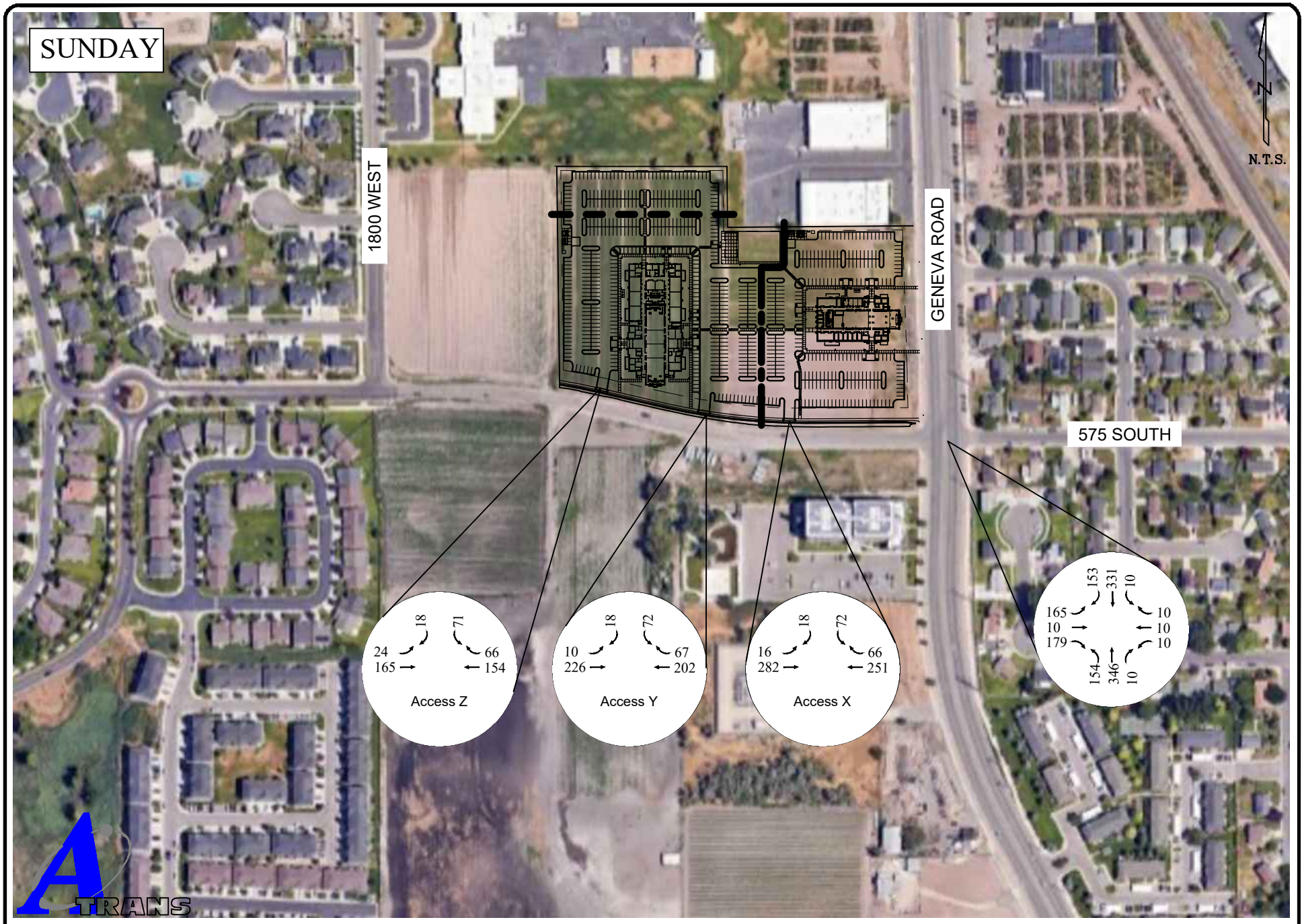

A-TRANS TRANSPORTATION ENGINEERING P.O. BOX 521651, SLC, UT 84152 Phone: 801-949-0348 Fax: 801-582-6252	Figure 8	2025 Total Traffic

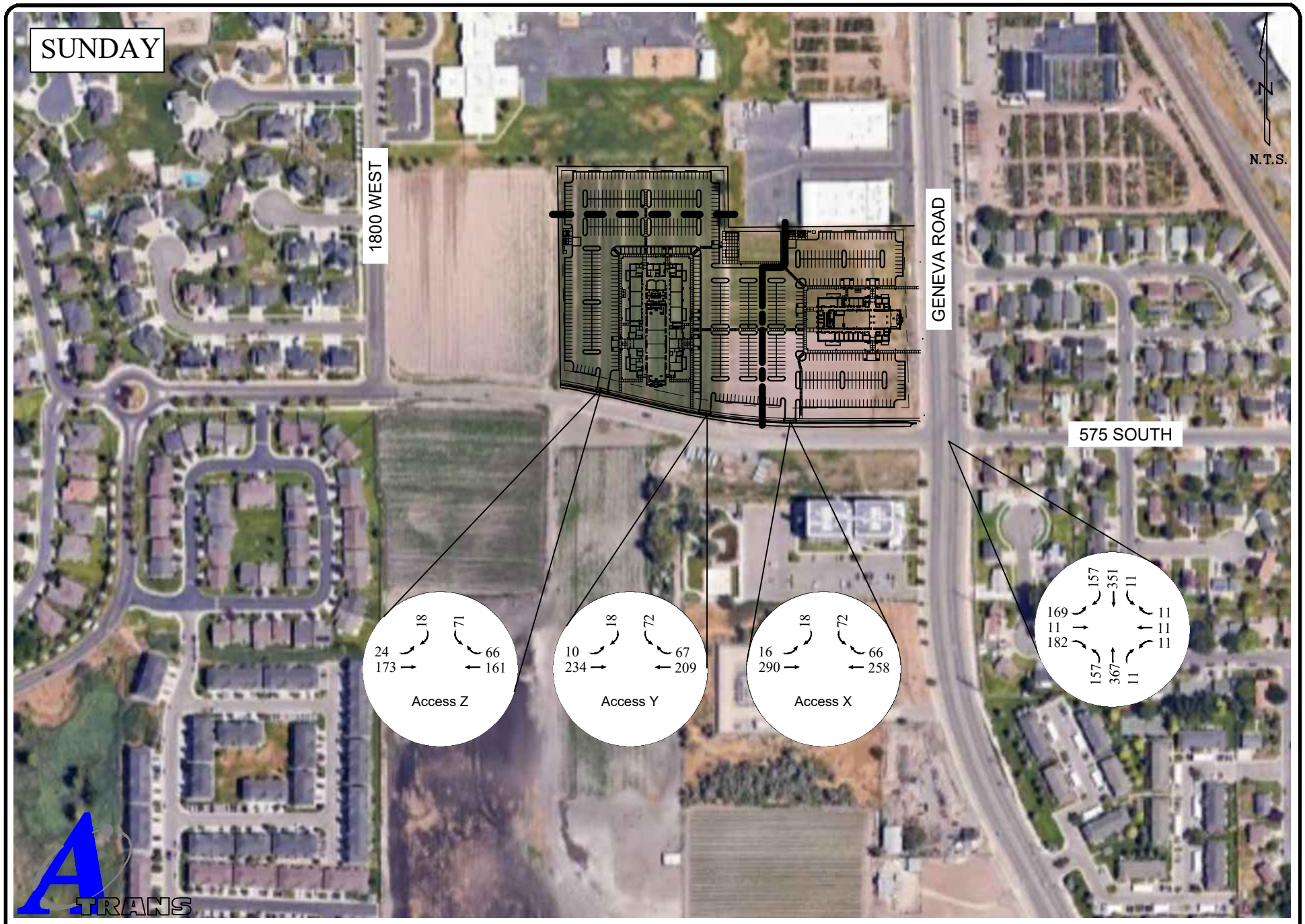

A-TRANS TRANSPORTATION ENGINEERING
P.O. BOX 521651, SLC, UT 84152
Phone: 801-949-0348 Fax: 801-582-6252

Figure 9

2030 Total Traffic

VII. Traffic Analysis

A. Level of Service Analysis

The intersection and access analysis evaluates the performance of each intersection and access using the measure of performance of delay and level of service (LOS). Table 5 provides a summary of the analysis. Tables 6-9 show the intersection and access analysis.

Table 5: Analysis Results

		2024 Existing	2025 Total	2030 Background	2030 Total
Geneva Road / 575 South	SUNDAY	EBL side street delay at 21.3/C	EBL side street delay at >100/F	EBL side street delay at 26.2/D	EBL side street delay at >100/F
575 South / Access X	SUNDAY		Access SBL egress at 14.7/B		Access SBL egress maintained at 14.7/B
575 South / Access Y	SUNDAY		Access SBL egress at 11.9/B		Access SBL egress maintained at 11.9/B
575 South / Access Z	SUNDAY		Access SBL egress at 12.1/B		Access SBL egress at 12.2/B

Table 6: Geneva Road / 575 South Intersection Analysis

		NBL	EBL	EBR	WBL	SBL
2024 Existing	SUNDAY	8.3 A	21.3 C	11.7 B	16.4 C	8.1 A
2030 Background	SUNDAY	8.7 A	26.2 D	12.8 B	18.6 C	8.2 A
2025 Total	SUNDAY	9.1 A	>100 F	13.8 B	27.7 D	8.1 A
2030 Total	SUNDAY	9.3 A	>100 F	14.6 B	31.0 D	8.2 A

Table 7: Geneva Road / Access X Analysis

		EBL	SBL
2025 Total	SUNDAY	8.0 A	14.7 B
2030 Total	SUNDAY	8.0 A	14.7 B

Table 8: Geneva Road / Access Y Analysis

		EBL	SBL
2025 Total	SUNDAY	7.9 A	11.9 B
2030 Total	SUNDAY	7.9 A	11.9 B

Table 9: Geneva Road / Access Z Analysis

		EBL	SBL
2025 Total	SUNDAY	7.8 A	12.1 B
2030 Total	SUNDAY	7.8 A	12.2 B

VIII. Conclusions

This traffic impact analysis is for the proposed Orem YSA 3rd and 10 ward stake center development located at 750 East 575 South on the northwest corner of Geneva Road and 575 South in Vineyard, Utah. The site is planned to include a 32,713 square foot stake center and a 17,000 square foot meetinghouse. Because the site is a chapel, Sunday is the peak period and is projected to generate 249 in and 269 out Sunday peak hour trips. The site is planning three accesses on 575 South.

The sites peak time is on Sunday. It will support the needs of the neighborhood and the traffic is likely from the immediate area. Because of the focused arrival and departure of traffic to the church, the 575 South at Geneva Road will experience a short time of congestion during the unloading of the parking lot. This short periods of congestion on a Sunday does not warrant any improvements to the intersection control method, i.e. a traffic signal is NOT warranted for this land use.

The proposed three accesses to the church allow for the parking fields to be loaded for the two buildings. With the access spacing shown in Figure 1 as measured from centerline to centerline, the eastern most access is 360 feet from Geneva Road the next access is 202feet to the west and the western most access is 248 feet from the center access and then it is 550 feet to the next City street to the west, 1800 West. There are no anticipated issues with this access spacing or operations as there are no significant accesses to the south and the proposed land use has peak traffic times on Sunday's.

There are no off site recommendations made for this site.

APPENDIX

Appendix A Traffic Counts and Projections

TURNING MOVEMENT COUNT SUMMARY

MID PEAK HOUR VOLUMES

INTERSECTION:
N-S STREET: **Geneva Road**
E-W STREET: **575 South**

COUNT DATE: **September 22, 2024**
Day of the Week: **Sunday**
NOTES:

COUNT TIME:
FROM: **10:00 AM**
TO: **12:00 PM**

PK HR VOLUME:	974
PHF:	0.91
PEAK HOUR:	
FROM:	TO:
11:00 AM	12:00 PM

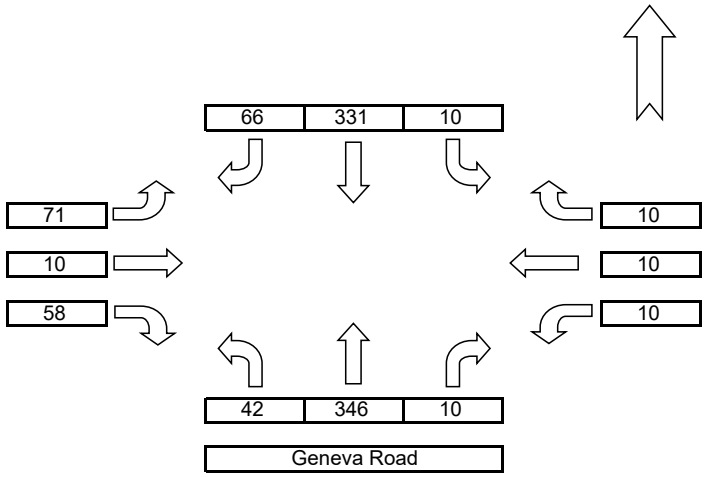

AM Traffic

COUNT DATA INPUT: Name: Jacob Name: Jacob Name: Jacob Name: Jacob

TIME PERIOD		NORTHBOUND			EASTBOUND			SOUTHBOUND			WESTBOUND			TOTAL 15'
FROM:	TO:	L	T	R	L	T	R	L	T	R	L	T	R	VOLUMES
10:00 AM	10:15 AM	10	85	2	17	0	5	3	56	9	0	2	1	190
10:15 AM	10:30 AM	7	90	1	12	2	4	2	99	12	1	1	1	232
10:30 AM	10:45 AM	4	85	3	21	1	9	4	114	9	1	0	2	253
10:45 AM	11:00 AM	0	88	1	7	0	3	3	86	7	2	1	2	200
11:00 AM	11:15 AM	18	86	3	22	2	8	1	67	13	3	2	3	228
11:15 AM	11:30 AM	14	84	3	11	3	18	4	84	15	2	2	4	244
11:30 AM	11:45 AM	6	90	2	22	3	21	3	94	20	2	3	1	267
11:45 AM	12:00 PM	4	86	2	16	2	11	2	86	18	3	3	2	235

			Trip Rate	Trips	In / Out %		Land Use	New		Total	
ITE 11th Edition	Size	Land Use	Sunday Peak	Sun Peak	Sun IN	Sun Out		Sun IN	Sun OUT	Sun IN	Sun OUT
YSA Stake Center	32.713	560	10.36	339	48%	52%	YSA Stake Center	163	176	163	176
Springwater Building	17		10.36	179	48%	52%	Springwater Building	86	93	86	93
Total				**518**			**Total**	**249**	**269**	**249**	**269**

1.26%	Growth Factor	Years
	1.00	0
	1.06	5
	1.38	26

Straight line growth assumed within the study horiz
Source: Traffic on Utah Highways

Road:	Foothill Blvd	
Year	AADT	Growth
2013	12,000	
2014	12,000	0%
2015	12,000	0%
2016	13,000	8%
2017	13,000	0%
2018	13,000	0%
2019	14,000	8%
2020	12,000	-14%
2021	13,000	8%
2022	13,000	0%
Average	14,000	**1.3%**

1 Geneva / 575 South 1.06

	2024	Site	2025	2030	2030
Sunday	Existing	Phase I	Total	Background	Total
EBL	71	94	165	75	169
EBT	10		10	11	11
EBR	58	121	179	61	182
WBL	10		10	11	11
WBT	10		10	11	11
WBR	10		10	11	11
NBL	42	112	154	45	157
NBT	346		346	367	367
NBR	10		10	11	11
SBL	10		10	11	11
SBT	331		331	351	351
SBR	66	87	153	70	157

2. 575 South / Access X

	2024	Site	2025	2030	2030
Sunday	Existing	Phase I	Total	Background	Total
EBL		16	16	0	16
EBT	139	143	282	147	290
EBR			0	0	0
WBL			0	0	0
WBT	118	133	251	125	258
WBR		66	66	0	66
NBL			0	0	0
NBT			0	0	0
NBR			0	0	0
SBL		72	72	0	72
SBT			0	0	0
SBR		18	18	0	18

3. 575 South / Access Y

	2024	Site	2025	2030	2030
Sunday	Existing	Phase I	Total	Background	Total
EBL		10	10	0	10
EBT	139	87	226	147	234
EBR			0	0	0
WBL			0	0	0
WBT	118	84	202	125	209
WBR		67	67	0	67
NBL			0	0	0
NBT			0	0	0
NBR			0	0	0
SBL		72	72	0	72
SBT			0	0	0
SBR		18	18	0	18

4. 575 South / Access Z

	2024	Site	2025	2030	2030
Sunday	Existing	Phase I	Total	Background	Total
EBL		24	24	0	24
EBT	139	26	165	147	173
EBR			0	0	0
WBL			0	0	0
WBT	118	36	154	125	161
WBR		66	66	0	66
NBL			0	0	0
NBT			0	0	0
NBR			0	0	0
SBL		71	71	0	71
SBT			0	0	0
SBR		18	18	0	18

Appendix B Without Site Intersection Analyses

Intersection	
Int Delay, s/veh	3.3

Movement	EBL	EBT	EBR	WBL	WBT	WBR	NBL	NBT	NBR	SBL	SBT	SBR
Lane Configurations												
Traffic Vol, veh/h	71	10	58	10	10	10	42	346	10	10	331	66
Future Vol, veh/h	71	10	58	10	10	10	42	346	10	10	331	66
Conflicting Peds, #/hr	0	0	0	0	0	0	0	0	0	0	0	0
Sign Control	Stop	Stop	Stop	Stop	Stop	Stop	Free	Free	Free	Free	Free	Free
RT Channelized	-	-	None	-	-	None	-	-	None	-	-	None
Storage Length	250	-	-	-	-	-	300	-	-	300	-	-
Veh in Median Storage, #	-	0	-	-	0	-	-	0	-	-	0	-
Grade, %	-	0	-	-	0	-	-	0	-	-	0	-
Peak Hour Factor	92	92	92	92	92	92	92	92	92	92	92	92
Heavy Vehicles, %	2	2	2	2	2	2	2	2	2	2	2	2
Mvmt Flow	77	11	63	11	11	11	46	376	11	11	360	72

Major/Minor	Minor2			Minor1			Major1			Major2		
Conflicting Flow All	704	897	216	682	928	194	432	0	0	387	0	0
Stage 1	418	418	-	474	474	-	-	-	-	-	-	-
Stage 2	286	479	-	208	454	-	-	-	-	-	-	-
Critical Hdwy	7.54	6.54	6.94	7.54	6.54	6.94	4.14	-	-	4.14	-	-
Critical Hdwy Stg 1	6.54	5.54	-	6.54	5.54	-	-	-	-	-	-	-
Critical Hdwy Stg 2	6.54	5.54	-	6.54	5.54	-	-	-	-	-	-	-
Follow-up Hdwy	3.52	4.02	3.32	3.52	4.02	3.32	2.22	-	-	2.22	-	-
Pot Cap-1 Maneuver	324	278	789	336	266	815	1124	-	-	1168	-	-
Stage 1	583	589	-	540	556	-	-	-	-	-	-	-
Stage 2	697	553	-	775	568	-	-	-	-	-	-	-
Platoon blocked, %								-	-		-	-
Mov Cap-1 Maneuver	297	264	789	288	253	815	1124	-	-	1168	-	-
Mov Cap-2 Maneuver	297	264	-	288	253	-	-	-	-	-	-	-
Stage 1	559	584	-	518	533	-	-	-	-	-	-	-
Stage 2	646	530	-	693	563	-	-	-	-	-	-	-

Approach	EB	WB	NB	SB
HCM Control Delay, s	16.6	16.4	0.9	0.2
HCM LOS	C	C		

Minor Lane/Major Mvmt	NBL	NBT	NBR	EBLn1	EBLn2	WBLn1	SBL	SBT	SBR
Capacity (veh/h)	1124	-	-	297	610	347	1168	-	-
HCM Lane V/C Ratio	0.041	-	-	0.26	0.121	0.094	0.009	-	-
HCM Control Delay (s)	8.3	-	-	21.3	11.7	16.4	8.1	-	-
HCM Lane LOS	A	-	-	C	B	C	A	-	-
HCM 95th %tile Q(veh)	0.1	-	-	1	0.4	0.3	0	-	-

Intersection	
Int Delay, s/veh	3.5

Movement	EBL	EBT	EBR	WBL	WBT	WBR	NBL	NBT	NBR	SBL	SBT	SBR
Lane Configurations												
Traffic Vol, veh/h	75	11	61	11	11	11	45	367	11	11	351	157
Future Vol, veh/h	75	11	61	11	11	11	45	367	11	11	351	157
Conflicting Peds, #/hr	0	0	0	0	0	0	0	0	0	0	0	0
Sign Control	Stop	Stop	Stop	Stop	Stop	Stop	Free	Free	Free	Free	Free	Free
RT Channelized	-	-	None	-	-	None	-	-	None	-	-	None
Storage Length	250	-	-	-	-	-	300	-	-	300	-	-
Veh in Median Storage, #	-	0	-	-	0	-	-	0	-	-	0	-
Grade, %	-	0	-	-	0	-	-	0	-	-	0	-
Peak Hour Factor	92	92	92	92	92	92	92	92	92	92	92	92
Heavy Vehicles, %	2	2	2	2	2	2	2	2	2	2	2	2
Mvmt Flow	82	12	66	12	12	12	49	399	12	12	382	171

Major/Minor	Minor2			Minor1			Major1			Major2		
Conflicting Flow All	796	1001	277	724	1080	206	553	0	0	411	0	0
Stage 1	492	492	-	503	503	-	-	-	-	-	-	-
Stage 2	304	509	-	221	577	-	-	-	-	-	-	-
Critical Hdwy	7.54	6.54	6.94	7.54	6.54	6.94	4.14	-	-	4.14	-	-
Critical Hdwy Stg 1	6.54	5.54	-	6.54	5.54	-	-	-	-	-	-	-
Critical Hdwy Stg 2	6.54	5.54	-	6.54	5.54	-	-	-	-	-	-	-
Follow-up Hdwy	3.52	4.02	3.32	3.52	4.02	3.32	2.22	-	-	2.22	-	-
Pot Cap-1 Maneuver	278	241	720	313	217	800	1013	-	-	1144	-	-
Stage 1	527	546	-	519	540	-	-	-	-	-	-	-
Stage 2	681	536	-	761	500	-	-	-	-	-	-	-
Platoon blocked, %								-	-		-	-
Mov Cap-1 Maneuver	250	227	720	261	204	800	1013	-	-	1144	-	-
Mov Cap-2 Maneuver	250	227	-	261	204	-	-	-	-	-	-	-
Stage 1	502	541	-	494	514	-	-	-	-	-	-	-
Stage 2	624	510	-	669	495	-	-	-	-	-	-	-

Approach	EB	WB	NB	SB
HCM Control Delay, s	19.6	18.6	0.9	0.2
HCM LOS	C	C		

Minor Lane/Major Mvmt	NBL	NBT	NBR	EBLn1	EBLn2	WBLn1	SBL	SBT	SBR
Capacity (veh/h)	1013	-	-	250	541	300	1144	-	-
HCM Lane V/C Ratio	0.048	-	-	0.326	0.145	0.12	0.01	-	-
HCM Control Delay (s)	8.7	-	-	26.2	12.8	18.6	8.2	-	-
HCM Lane LOS	A	-	-	D	B	C	A	-	-
HCM 95th %tile Q(veh)	0.2	-	-	1.4	0.5	0.4	0	-	-

Appendix C With Site Intersection Analyses

Intersection	
Int Delay, s/veh	22.5

Movement	EBL	EBT	EBR	WBL	WBT	WBR	NBL	NBT	NBR	SBL	SBT	SBR
Lane Configurations												
Traffic Vol, veh/h	165	10	179	10	10	10	154	346	10	10	331	153
Future Vol, veh/h	165	10	179	10	10	10	154	346	10	10	331	153
Conflicting Peds, #/hr	0	0	0	0	0	0	0	0	0	0	0	0
Sign Control	Stop	Stop	Stop	Stop	Stop	Stop	Free	Free	Free	Free	Free	Free
RT Channelized	-	-	None	-	-	None	-	-	None	-	-	None
Storage Length	250	-	-	-	-	-	300	-	-	300	-	-
Veh in Median Storage, #	-	0	-	-	0	-	-	0	-	-	0	-
Grade, %	-	0	-	-	0	-	-	0	-	-	0	-
Peak Hour Factor	92	92	92	92	92	92	92	92	92	92	92	92
Heavy Vehicles, %	2	2	2	2	2	2	2	2	2	2	2	2
Mvmt Flow	179	11	195	11	11	11	167	376	11	11	360	166

Major/Minor	Minor2			Minor1			Major1			Major2		
Conflicting Flow All	993	1186	263	924	1264	194	526	0	0	387	0	0
Stage 1	465	465	-	716	716	-	-	-	-	-	-	-
Stage 2	528	721	-	208	548	-	-	-	-	-	-	-
Critical Hdwy	7.54	6.54	6.94	7.54	6.54	6.94	4.14	-	-	4.14	-	-
Critical Hdwy Stg 1	6.54	5.54	-	6.54	5.54	-	-	-	-	-	-	-
Critical Hdwy Stg 2	6.54	5.54	-	6.54	5.54	-	-	-	-	-	-	-
Follow-up Hdwy	3.52	4.02	3.32	3.52	4.02	3.32	2.22	-	-	2.22	-	-
Pot Cap-1 Maneuver	200	187	735	224	168	815	1037	-	-	1168	-	-
Stage 1	547	561	-	387	432	-	-	-	-	-	-	-
Stage 2	502	430	-	775	515	-	-	-	-	-	-	-
Platoon blocked, %								-	-		-	-
Mov Cap-1 Maneuver	~ 162	155	735	136	140	815	1037	-	-	1168	-	-
Mov Cap-2 Maneuver	~ 162	155	-	136	140	-	-	-	-	-	-	-
Stage 1	459	556	-	325	362	-	-	-	-	-	-	-
Stage 2	403	361	-	553	510	-	-	-	-	-	-	-

Approach	EB	WB	NB	SB
HCM Control Delay, s	81.6	27.7	2.8	0.2
HCM LOS	F	D		

Minor Lane/Major Mvmt	NBL	NBT	NBR	EBLn1	EBLn2	WBLn1	SBL	SBT	SBR
Capacity (veh/h)	1037	-	-	162	614	191	1168	-	-
HCM Lane V/C Ratio	0.161	-	-	1.107	0.335	0.171	0.009	-	-
HCM Control Delay (s)	9.1	-	-	159.3	13.8	27.7	8.1	-	-
HCM Lane LOS	A	-	-	F	B	D	A	-	-
HCM 95th %tile Q(veh)	0.6	-	-	9.4	1.5	0.6	0	-	-

Notes			
~: Volume exceeds capacity	$: Delay exceeds 300s	+: Computation Not Defined	*: All major volume in platoon

Intersection	
Int Delay, s/veh	2

Movement	EBL	EBT	WBT	WBR	SBL	SBR
Lane Configurations						
Traffic Vol, veh/h	16	282	251	66	72	18
Future Vol, veh/h	16	282	251	66	72	18
Conflicting Peds, #/hr	0	0	0	0	0	0
Sign Control	Free	Free	Free	Free	Stop	Stop
RT Channelized	-	None	-	None	-	None
Storage Length	100	-	-	-	0	-
Veh in Median Storage, #	-	0	0	-	0	-
Grade, %	-	0	0	-	0	-
Peak Hour Factor	92	92	92	92	92	92
Heavy Vehicles, %	2	2	2	2	2	2
Mvmt Flow	17	307	273	72	78	20

Major/Minor	Major1		Major2		Minor2	
Conflicting Flow All	345	0	-	0	650	309
Stage 1	-	-	-	-	309	-
Stage 2	-	-	-	-	341	-
Critical Hdwy	4.12	-	-	-	6.42	6.22
Critical Hdwy Stg 1	-	-	-	-	5.42	-
Critical Hdwy Stg 2	-	-	-	-	5.42	-
Follow-up Hdwy	2.218	-	-	-	3.518	3.318
Pot Cap-1 Maneuver	1214	-	-	-	434	731
Stage 1	-	-	-	-	745	-
Stage 2	-	-	-	-	720	-
Platoon blocked, %		-	-	-		
Mov Cap-1 Maneuver	1214	-	-	-	428	731
Mov Cap-2 Maneuver	-	-	-	-	428	-
Stage 1	-	-	-	-	735	-
Stage 2	-	-	-	-	720	-

Approach	EB	WB	SB
HCM Control Delay, s	0.4	0	14.7
HCM LOS			B

Minor Lane/Major Mvmt	EBL	EBT	WBT	WBR	SBLn1
Capacity (veh/h)	1214	-	-	-	467
HCM Lane V/C Ratio	0.014	-	-	-	0.209
HCM Control Delay (s)	8	-	-	-	14.7
HCM Lane LOS	A	-	-	-	B
HCM 95th %tile Q(veh)	0	-	-	-	0.8

Intersection	
Int Delay, s/veh	1.9

Movement	EBL	EBT	WBT	WBR	SBL	SBR
Lane Configurations						
Traffic Vol, veh/h	10	226	202	67	72	18
Future Vol, veh/h	10	226	202	67	72	18
Conflicting Peds, #/hr	0	0	0	0	0	0
Sign Control	Free	Free	Free	Free	Stop	Stop
RT Channelized	-	None	-	None	-	None
Storage Length	100	-	-	-	0	-
Veh in Median Storage, #	-	0	0	-	0	-
Grade, %	-	0	0	-	0	-
Peak Hour Factor	92	92	92	92	92	92
Heavy Vehicles, %	2	2	2	2	2	2
Mvmt Flow	11	246	220	73	78	20

Major/Minor	Major1		Major2		Minor2	
Conflicting Flow All	293	0	-	0	525	257
Stage 1	-	-	-	-	257	-
Stage 2	-	-	-	-	268	-
Critical Hdwy	4.12	-	-	-	6.42	6.22
Critical Hdwy Stg 1	-	-	-	-	5.42	-
Critical Hdwy Stg 2	-	-	-	-	5.42	-
Follow-up Hdwy	2.218	-	-	-	3.518	3.318
Pot Cap-1 Maneuver	1269	-	-	-	513	782
Stage 1	-	-	-	-	786	-
Stage 2	-	-	-	-	777	-
Platoon blocked, %		-	-	-		
Mov Cap-1 Maneuver	1269	-	-	-	508	782
Mov Cap-2 Maneuver	-	-	-	-	587	-
Stage 1	-	-	-	-	779	-
Stage 2	-	-	-	-	777	-

Approach	EB	WB	SB
HCM Control Delay, s	0.3	0	11.9
HCM LOS			B

Minor Lane/Major Mvmt	EBL	EBT	WBT	WBR	SBLn1
Capacity (veh/h)	1269	-	-	-	618
HCM Lane V/C Ratio	0.009	-	-	-	0.158
HCM Control Delay (s)	7.9	-	-	-	11.9
HCM Lane LOS	A	-	-	-	B
HCM 95th %tile Q(veh)	0	-	-	-	0.6

Intersection	
Int Delay, s/veh	2.5

Movement	EBL	EBT	WBT	WBR	SBL	SBR
Lane Configurations						
Traffic Vol, veh/h	24	165	154	66	71	18
Future Vol, veh/h	24	165	154	66	71	18
Conflicting Peds, #/hr	0	0	0	0	0	0
Sign Control	Free	Free	Free	Free	Stop	Stop
RT Channelized	-	None	-	None	-	None
Storage Length	100	-	-	-	0	-
Veh in Median Storage, #	-	0	0	-	0	-
Grade, %	-	0	0	-	0	-
Peak Hour Factor	92	92	92	92	92	92
Heavy Vehicles, %	2	2	2	2	2	2
Mvmt Flow	26	179	167	72	77	20

Major/Minor	Major1		Major2		Minor2	
Conflicting Flow All	239	0	-	0	434	203
Stage 1	-	-	-	-	203	-
Stage 2	-	-	-	-	231	-
Critical Hdwy	4.12	-	-	-	6.42	6.22
Critical Hdwy Stg 1	-	-	-	-	5.42	-
Critical Hdwy Stg 2	-	-	-	-	5.42	-
Follow-up Hdwy	2.218	-	-	-	3.518	3.318
Pot Cap-1 Maneuver	1328	-	-	-	579	838
Stage 1	-	-	-	-	831	-
Stage 2	-	-	-	-	807	-
Platoon blocked, %		-	-	-		
Mov Cap-1 Maneuver	1328	-	-	-	567	838
Mov Cap-2 Maneuver	-	-	-	-	567	-
Stage 1	-	-	-	-	814	-
Stage 2	-	-	-	-	807	-

Approach	EB	WB	SB
HCM Control Delay, s	1	0	12.1
HCM LOS			B

Minor Lane/Major Mvmt	EBL	EBT	WBT	WBR	SBLn1
Capacity (veh/h)	1328	-	-	-	607
HCM Lane V/C Ratio	0.02	-	-	-	0.159
HCM Control Delay (s)	7.8	-	-	-	12.1
HCM Lane LOS	A	-	-	-	B
HCM 95th %tile Q(veh)	0.1	-	-	-	0.6

Intersection	
Int Delay, s/veh	28.9

Movement	EBL	EBT	EBR	WBL	WBT	WBR	NBL	NBT	NBR	SBL	SBT	SBR
Lane Configurations												
Traffic Vol, veh/h	169	11	182	11	11	11	157	367	11	11	351	157
Future Vol, veh/h	169	11	182	11	11	11	157	367	11	11	351	157
Conflicting Peds, #/hr	0	0	0	0	0	0	0	0	0	0	0	0
Sign Control	Stop	Stop	Stop	Stop	Stop	Stop	Free	Free	Free	Free	Free	Free
RT Channelized	-	-	None	-	-	None	-	-	None	-	-	None
Storage Length	250	-	-	-	-	-	300	-	-	300	-	-
Veh in Median Storage, #	-	0	-	-	0	-	-	0	-	-	0	-
Grade, %	-	0	-	-	0	-	-	0	-	-	0	-
Peak Hour Factor	92	92	92	92	92	92	92	92	92	92	92	92
Heavy Vehicles, %	2	2	2	2	2	2	2	2	2	2	2	2
Mvmt Flow	184	12	198	12	12	12	171	399	12	12	382	171

Major/Minor	Minor2			Minor1			Major1			Major2		
Conflicting Flow All	1040	1245	277	968	1324	206	553	0	0	411	0	0
Stage 1	492	492	-	747	747	-	-	-	-	-	-	-
Stage 2	548	753	-	221	577	-	-	-	-	-	-	-
Critical Hdwy	7.54	6.54	6.94	7.54	6.54	6.94	4.14	-	-	4.14	-	-
Critical Hdwy Stg 1	6.54	5.54	-	6.54	5.54	-	-	-	-	-	-	-
Critical Hdwy Stg 2	6.54	5.54	-	6.54	5.54	-	-	-	-	-	-	-
Follow-up Hdwy	3.52	4.02	3.32	3.52	4.02	3.32	2.22	-	-	2.22	-	-
Pot Cap-1 Maneuver	185	173	720	208	155	800	1013	-	-	1144	-	-
Stage 1	527	546	-	371	418	-	-	-	-	-	-	-
Stage 2	488	416	-	761	500	-	-	-	-	-	-	-
Platoon blocked, %								-	-		-	-
Mov Cap-1 Maneuver	~ 147	142	720	122	128	800	1013	-	-	1144	-	-
Mov Cap-2 Maneuver	~ 147	142	-	122	128	-	-	-	-	-	-	-
Stage 1	438	541	-	308	347	-	-	-	-	-	-	-
Stage 2	386	346	-	534	495	-	-	-	-	-	-	-

Approach	EB	WB	NB	SB
HCM Control Delay, s	108.5	31	2.7	0.2
HCM LOS	F	D		

Minor Lane/Major Mvmt	NBL	NBT	NBR	EBLn1	EBLn2	WBLn1	SBL	SBT	SBR
Capacity (veh/h)	1013	-	-	147	584	174	1144	-	-
HCM Lane V/C Ratio	0.168	-	-	1.25	0.359	0.206	0.01	-	-
HCM Control Delay (s)	9.3	-	-	215.8	14.6	31	8.2	-	-
HCM Lane LOS	A	-	-	F	B	D	A	-	-
HCM 95th %tile Q(veh)	0.6	-	-	10.9	1.6	0.7	0	-	-

Notes			
~: Volume exceeds capacity	$: Delay exceeds 300s	+: Computation Not Defined	*: All major volume in platoon

Intersection	
Int Delay, s/veh	2

Movement	EBL	EBT	WBT	WBR	SBL	SBR
Lane Configurations						
Traffic Vol, veh/h	16	282	251	66	72	18
Future Vol, veh/h	16	282	251	66	72	18
Conflicting Peds, #/hr	0	0	0	0	0	0
Sign Control	Free	Free	Free	Free	Stop	Stop
RT Channelized	-	None	-	None	-	None
Storage Length	100	-	-	-	0	-
Veh in Median Storage, #	-	0	0	-	0	-
Grade, %	-	0	0	-	0	-
Peak Hour Factor	92	92	92	92	92	92
Heavy Vehicles, %	2	2	2	2	2	2
Mvmt Flow	17	307	273	72	78	20

Major/Minor	Major1		Major2		Minor2	
Conflicting Flow All	345	0	-	0	650	309
Stage 1	-	-	-	-	309	-
Stage 2	-	-	-	-	341	-
Critical Hdwy	4.12	-	-	-	6.42	6.22
Critical Hdwy Stg 1	-	-	-	-	5.42	-
Critical Hdwy Stg 2	-	-	-	-	5.42	-
Follow-up Hdwy	2.218	-	-	-	3.518	3.318
Pot Cap-1 Maneuver	1214	-	-	-	434	731
Stage 1	-	-	-	-	745	-
Stage 2	-	-	-	-	720	-
Platoon blocked, %			-	-	-	
Mov Cap-1 Maneuver	1214	-	-	-	428	731
Mov Cap-2 Maneuver	-	-	-	-	428	-
Stage 1	-	-	-	-	735	-
Stage 2	-	-	-	-	720	-

Approach	EB	WB	SB
HCM Control Delay, s	0.4	0	14.7
HCM LOS			B

Minor Lane/Major Mvmt	EBL	EBT	WBT	WBR	SBLn1
Capacity (veh/h)	1214	-	-	-	467
HCM Lane V/C Ratio	0.014	-	-	-	0.209
HCM Control Delay (s)	8	-	-	-	14.7
HCM Lane LOS	A	-	-	-	B
HCM 95th %tile Q(veh)	0	-	-	-	0.8

Intersection	
Int Delay, s/veh	1.9

Movement	EBL	EBT	WBT	WBR	SBL	SBR
Lane Configurations						
Traffic Vol, veh/h	10	226	202	67	72	18
Future Vol, veh/h	10	226	202	67	72	18
Conflicting Peds, #/hr	0	0	0	0	0	0
Sign Control	Free	Free	Free	Free	Stop	Stop
RT Channelized	-	None	-	None	-	None
Storage Length	100	-	-	-	0	-
Veh in Median Storage, #	-	0	0	-	0	-
Grade, %	-	0	0	-	0	-
Peak Hour Factor	92	92	92	92	92	92
Heavy Vehicles, %	2	2	2	2	2	2
Mvmt Flow	11	246	220	73	78	20

Major/Minor	Major1		Major2		Minor2	
Conflicting Flow All	293	0	-	0	525	257
Stage 1	-	-	-	-	257	-
Stage 2	-	-	-	-	268	-
Critical Hdwy	4.12	-	-	-	6.42	6.22
Critical Hdwy Stg 1	-	-	-	-	5.42	-
Critical Hdwy Stg 2	-	-	-	-	5.42	-
Follow-up Hdwy	2.218	-	-	-	3.518	3.318
Pot Cap-1 Maneuver	1269	-	-	-	513	782
Stage 1	-	-	-	-	786	-
Stage 2	-	-	-	-	777	-
Platoon blocked, %		-	-	-		
Mov Cap-1 Maneuver	1269	-	-	-	508	782
Mov Cap-2 Maneuver	-	-	-	-	587	-
Stage 1	-	-	-	-	779	-
Stage 2	-	-	-	-	777	-

Approach	EB	WB	SB
HCM Control Delay, s	0.3	0	11.9
HCM LOS			B

Minor Lane/Major Mvmt	EBL	EBT	WBT	WBR	SBLn1
Capacity (veh/h)	1269	-	-	-	618
HCM Lane V/C Ratio	0.009	-	-	-	0.158
HCM Control Delay (s)	7.9	-	-	-	11.9
HCM Lane LOS	A	-	-	-	B
HCM 95th %tile Q(veh)	0	-	-	-	0.6

Intersection	
Int Delay, s/veh	2.5

Movement	EBL	EBT	WBT	WBR	SBL	SBR
Lane Configurations						
Traffic Vol, veh/h	24	173	161	66	71	18
Future Vol, veh/h	24	173	161	66	71	18
Conflicting Peds, #/hr	0	0	0	0	0	0
Sign Control	Free	Free	Free	Free	Stop	Stop
RT Channelized	-	None	-	None	-	None
Storage Length	100	-	-	-	0	-
Veh in Median Storage, #	-	0	0	-	0	-
Grade, %	-	0	0	-	0	-
Peak Hour Factor	92	92	92	92	92	92
Heavy Vehicles, %	2	2	2	2	2	2
Mvmt Flow	26	188	175	72	77	20

Major/Minor	Major1		Major2		Minor2	
Conflicting Flow All	247	0	-	0	451	211
Stage 1	-	-	-	-	211	-
Stage 2	-	-	-	-	240	-
Critical Hdwy	4.12	-	-	-	6.42	6.22
Critical Hdwy Stg 1	-	-	-	-	5.42	-
Critical Hdwy Stg 2	-	-	-	-	5.42	-
Follow-up Hdwy	2.218	-	-	-	3.518	3.318
Pot Cap-1 Maneuver	1319	-	-	-	566	829
Stage 1	-	-	-	-	824	-
Stage 2	-	-	-	-	800	-
Platoon blocked, %			-	-	-	
Mov Cap-1 Maneuver	1319	-	-	-	555	829
Mov Cap-2 Maneuver	-	-	-	-	555	-
Stage 1	-	-	-	-	808	-
Stage 2	-	-	-	-	800	-

Approach	EB	WB	SB
HCM Control Delay, s	0.9	0	12.2
HCM LOS			B

Minor Lane/Major Mvmt	EBL	EBT	WBT	WBR	SBLn1
Capacity (veh/h)	1319	-	-	-	595
HCM Lane V/C Ratio	0.02	-	-	-	0.163
HCM Control Delay (s)	7.8	-	-	-	12.2
HCM Lane LOS	A	-	-	-	B
HCM 95th %tile Q(veh)	0.1	-	-	-	0.6

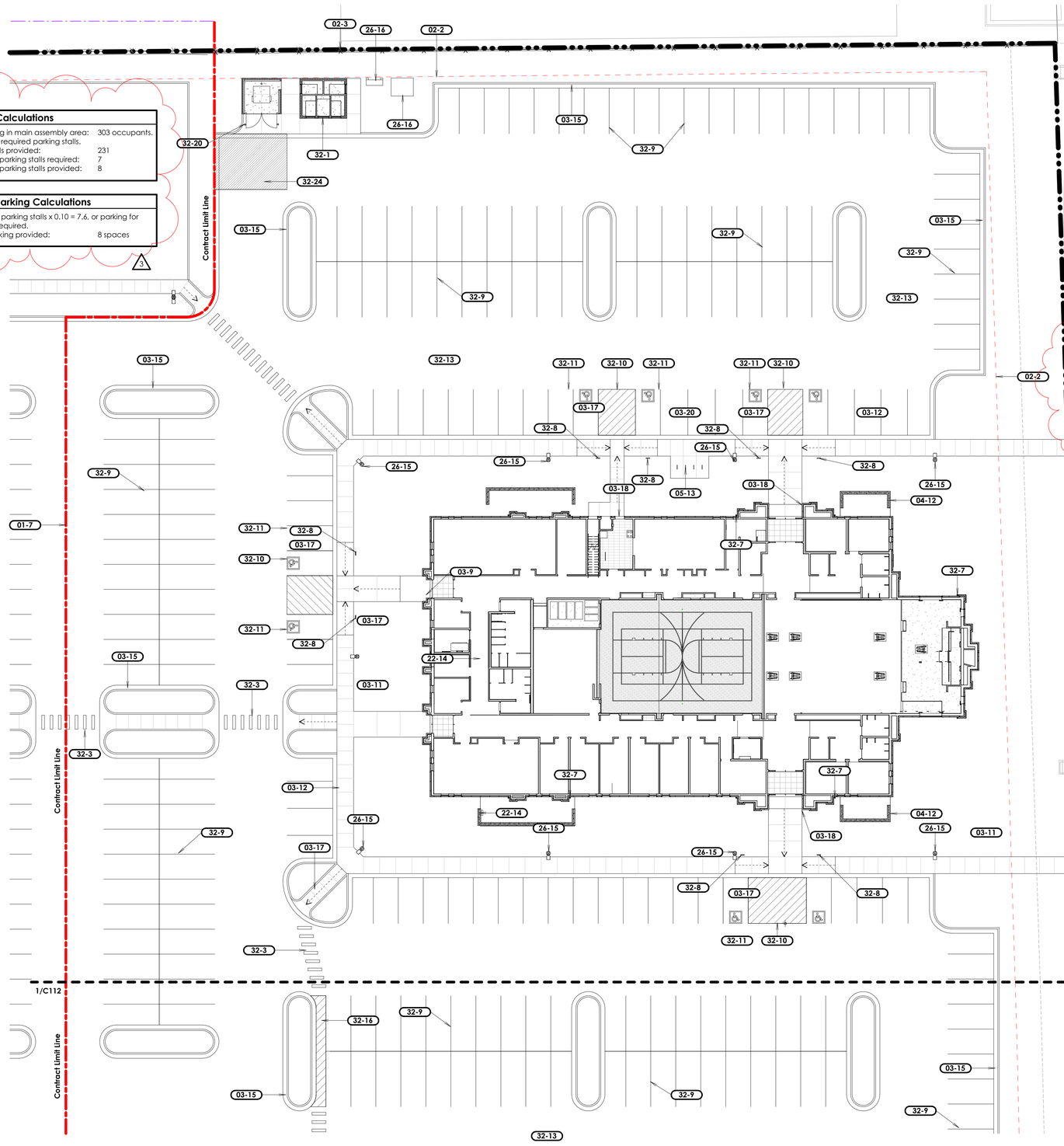

Parking Calculations

Total seating in main assembly area:	303 occupants.
303 / 4 = 76 required parking stalls.	
Parking stalls provided:	231
Accessible parking stalls required:	7
Accessible parking stalls provided:	8

Bicycle Parking Calculations

76 required parking stalls x 0.10 = 7.6, or parking for 8 bicycles required.
Bicycle parking provided: 8 spaces

General Notes

A. All noted items are new unless noted otherwise.
B. The contractor shall verify all existing site conditions prior to bidding. Coordinate all work affecting adjacent properties with the respective property owners prior to any demolition or construction work. Repair and replace all existing items on adjacent properties damaged or affected during construction to the satisfaction of the property owner.
C. Refer to ConsLog for Information Available to Bidders, including the geotechnical report. Please note that the geotechnical report found groundwater at relatively shallow depths. The Contractor will be responsible for all required shoring, stabilization, and dewatering required for construction.
D. The Contractor shall enclose the entire area of work with a temporary fence and maintain a safe pedestrian route along the rights of way adjacent to the site throughout construction.
E. Omitted.
F. Omitted.
G. Omitted.
H. Refer to the Specifications for required locations of concrete control joints and expansion joints. Submit a proposed control joint and expansion joint plan to the Architect for approval prior to installation of site concrete.
I. The new building and parking lot are parallel or perpendicular to true north.
J. The contractor shall install all components of the building and site to meet accessibility standards as shown in 2017 ICC A117.1.
K. In 575 South right-of-way, patch roadway as required by city standards after utilities and other right-of-way improvements have been removed, modified, or added.

Site Data

	Square Feet	% of Site
Main building	18,298 SF	11.5%
Storage building	244 SF	0.2%
Asphalt Pavement	83,011 SF	52.3%
Concrete	15,616 SF	9.8%
Turfgrass	13,847 SF	8.7%
Other landscaping	27,739 SF	17.5%
Total site	**158,756 SF**	**3.64 acres**

Overexcavation and Fill Notes

A. For Overexcavation and Fill Detail, see F/C503.
B. Remove all unconsolidated fill and deleterious materials from the entire site prior to construction. Remove and stockpile topsoil as necessary for landscaped areas. For depth and locations of topsoil, see the Landscape Sheets and Specification Sections.
C. In the area of the building and mechanical enclosures:
   a. Overexcavate the entire footprint and 60" beyond at a 1:1 slope to the elevation as noted on F/C503.
   b. Install imported structural fill up to the bottom of footing level.
   c. Install imported structural fill up to the base course under the building slab.
D. At the storage building:
   a. Excavate the entire footprint of the storage building to an elevation 1 foot below the bottom of footings.
   b. Install imported structural fill up to the bottom of footing level.
   c. Install structural fill up to the base course under the storage building slab.
E. At the dumpster enclosure:
   a. Excavate the entire footprint of the dumpster enclosure to an elevation 1 foot below the bottom of footings.
   b. Install imported structural fill up to the bottom of footing level.
   c. Install structural fill to raise the grade to the base course under the dumpster slab and pad. See the Site Details for base course and concrete slab thickness.
F. At a 20 foot x 15 foot area in front of the dumpster [as shown on the Site Architectural Plans], install (2) 3" layers of asphalt with a 14" minimum base.
G. Install 8" crushed rock base beneath sidewalks at building entries, full width of sidewalk and full length of sidewalk from the building to the perimeter sidewalk.
H. All crushed rock base shall be 3/4" and shall be compacted by procedural compaction.
I. At sidewalks and all site concrete pads and elements:
   a. Overexcavate as noted in Item B. above.
   b. Install subbase up to the base level.
   c. Install 4" aggregate base below all site concrete elements, pads, and sidewalks. See site details.
J. At asphalt paving:
   a. Overexcavate as noted in Item B. above.
   b. Install subbase up to the base level.
   c. Install 3" asphalt paving over 9" base over entire parking lot (excluding the area in front of the dumpster enclosure).
K. All structural fill shall be imported.
L. Install imported structural fill full depth at all utility trenches.
M. All topsoil shall be imported. Provide topsoil tests and amendments as required by the Landscape Sheets and Specifications. Areas of landscaping without planting may have existing topsoil used as fill and may have existing topsoil left in place where compatible with finished grades."
N. All compacted soils shall be density tested.
O. On-site native soils may be used as fill only in landscape areas.
P. For the purposes of bidding, assume no unconsolidated fill or deleterious materials other than grubbing and typical removal of organics, etc., beyond that noted in the geotechnical report. A further geotechnical investigation will be completed shortly and the contract adjusted as necessary for its findings.

Note

For site utility information, fire hydrants, storm drain information, storm drain structures, etc., see the Civil Engineer's sheets.
For concrete snow curbs, see the Landscape Architect's sheets.
Coordinated locations will be shown on the sheet prior to installation.

Keyed Notes

01-7 Contract limit line. All work shown on the other side of the contract limit line is not in this projectâ€™s scope of work and is shown for reference only. Coordinate all work at the contract limit line with the other projectâ€™s contractors. Refer to the other site sheets for specific requirements for items that extend past the contract limit line.
02-2 Existing utility easement. See survey and site utility plan.
02-3 Remove existing perimeter fence in preparation for new perimeter fence. See Site Architectural Plan. Coordinate with adjacent paving. fences which tie into this fence, etc. Repair adjacent items to remain as necessary to tie iinto new fence and mow strip.
02-4 Existing utility equipment to remain.
02-12 Existing sidewalk, curb and gutter to remain.
03-9 Building landing. 2% slope maximum.
03-11 New concrete sidewalk. See A & H/C501. Typical.
03-12 New integral sidewalk, curb, and gutter. See B/C501. See Grading and Drainage Plan for infall / outfall of gutter.
03-15 New concrete curb & gutter - typical. See typical details C501 & infall / outfall notation on the Grading & Drainage Site Plans.
03-17 Sloped section of concrete sidewalk at <5% slope. See grading plan for exact slope.
03-18 Align sidewalk with building foundation wall.
03-20 New control joint in concrete flatwork. See H/C501.
04-12 Mechanical enclosure wall. See C and D/C504 and Structural Sheets.
05-13 New stainless steel bike rack. See L/C501.
22-14 Natural Gas Meter. See Plumbing Sheets.
26-15 New pole light and concrete base. See D/C503 and electrical sheets.
26-16 New concrete transformer pad and CT can per power company requirements. See Electrical Sheets.
32-1 New irrigation controller. See landscape sheets.
32-3 New painted crosswalk.
32-7 New roof drain box at downspout. See utility sheets and C/C502. Typical.
32-8 New accessible parking sign. See A/C502.
32-9 New painted parking lines. Parking lines shall be 4" wide reflective white paint centered on top. Typical.
32-10 New accessible parking access aisle. Paint lines shall be 4" wide reflective white, at a 45Â° angle, and have 2'-0" spacing.
32-11 New blue & white painted accessible parking symbol.
32-13 New asphalt paving - typical. See F/C501 and overexcavation and fill notes.
32-16 Painted out "no parking" area. Paint lines shall be 4" wide reflective white, at a 45Â° angle, and have 2'-0" spacing.
32-20 New bollard. See B/C502.
32-24 (2) 3" layers of asphalt over 14" aggregate base in shaded area.

General Notes

L. All existing utility lines less than 69KV shall be undergrounded with the first phase of development.
M. All mechanical equipment shall be screened/concealed from street view. See the Mechanical Enclosure Details.
N. All work on this project be covered for dust and weed control during all construction activities.
O. All construction on this project shall be maintained in conformance with the approved site plan and landscape plan. Any changes thereto shall require approval of Vineyard City.
P. This project is subject to the current Vineyard City Engineering Requirements, General Plan, Zoning Ordinance, and any applicable regulations.

0' 10' 20' 40' 80'

W N E S

1 Site Plan - North

Scale: 1" = 20'-0"

bhd ARCHITECTS
www.bhdarchitects.com
Phone 801.571.0010
Fax 801.571.0303
Toll Free 888.571.0010
65 East Wadsworth Park Drive
Suite 205 Draper, Utah 84020

LICENSED ARCHITECT
Lafe Theodore Harris
29 Jan 2025
6279-0301
STATE OF UTAH

THE CHURCH OF JESUS CHRIST OF LATTER-DAY SAINTS

Springwater 9
Vineyard UT Springwater Stake
Approx. 542 South Geneva Road
Vineyard, Utah 84059

Date: 15 Aug 2024
BHD #: 2346
County Parcel: 39-228:0001
Plan Series: G300-MH-11
Owner #: 502-2004

Drawing Issue and Revision Schedule

#	Date	Description
3	29 Jan 2025	Site Plan Review Responses
2	27 Aug 2024	Addendum #1
1	15 Aug 2024	Bid Documents

Site Plan - North

C111

Printed 1/29/2025 5:17:03 PM

bhd ARCHITECTS

Phone 801.571.0010
Fax 801.571.0303
Toll Free 888.571.0010
bhdarchitects.com

65 East Wadsworth Park Drive
Suite 205 Draper, Utah 84020

Project Narrative

Date

Thu, 16 Jan 2025

BHDA Project Number

2346

Project Designation

Springwater 9
Vineyard UT Springwater Stake

Project Address

Approx. 542 South Geneva Road
Vineyard, Utah

Narrative

To Whom it May Concern:

The Church of Jesus Christ of Latter-day Saints is proposing to construct two new meetinghouses in a campus layout on the parcel of land located at the address above. One meetinghouse [Orem YSA 3rd 10 Ward Building] will be a meetinghouse for unmarried college students. The adjacent meetinghouse [Springwater] will serve local residents in the vicinity. We intend to have separate building permits, but not separate the parcels. We also do not intend to do a phased construction, but to build both buildings at the same time.

This project, the smaller, more typical building, will be a standard meetinghouse space for 4 wards. It will also have a cultural hall, offices, and classrooms for religious use. The exterior materials will be earth-toned brick, with asphalt shingles.

An asphalt parking lot with 231 total parking spaces is provided.

Landscaping will include some lawn, but most of the landscaping will be composed of rock mulch, trees, and shrubs. The design will be drought tolerant but also attractive and will fit in with the neighborhood.

The building and site will be used on Sundays throughout the day and during the week, mostly in the evenings.

If one of the buildings is completed before the other, the completed building will be the only one used. The contractors for both buildings will provide construction fencing for their individual building. This means that if one is completed earlier, a fence will still remain between the completed site and the unfinished site, which will keep parking contained on the completed site.

Building and Site Design Information

Total Parcel Area: 3.64 acres

Building Areas:

- Meetinghouse: 18,298 sf
- Storage Building: 244 sf

Landscape Areas:

- Total: 56,717 sf
- Shrub/Groundcover: 41,586 sf (627 plants)
- Lawn: 13,847 sf
- Trees: 117

Impervious Areas:

- Asphalt pavement: 83,011 sf
- Concrete: 15,616 sf

End of Project Narrative

General Notes

L. All existing utility lines less than 69KV shall be undergrounded with the first phase of development.
M. All mechanical equipment shall be screened/concealed from street view. See the Mechanical Enclosure Details.
N. All work on this project be covered for dust and weed control during all construction activities.
O. All construction on this project shall be maintained in conformance with the approved site plan and landscape plan. Any changes thereto shall require approval of Vineyard City.
P. This project is subject to the current Vineyard City Engineering Requirements, General Plan, Zoning Ordinance, and any applicable regulations.

Parking Calculations

Total seating in main assembly area:	303 occupants.
303 / 4 = 76 required parking stalls.	
Parking stalls provided:	231
Accessible parking stalls required:	7
Accessible parking stalls provided:	8

Bicycle Parking Calculations

76 required parking stalls x 0.10 = 7.6, or parking for 8 bicycles required.
Bicycle parking provided: 8 spaces

General Notes

A. All noted items are new unless noted otherwise.
B. The contractor shall verify all existing site conditions prior to bidding. Coordinate all work affecting adjacent properties with the respective property owners prior to any demolition or construction work. Repair and replace all existing items on adjacent properties damaged or affected during construction to the satisfaction of the property owner.
C. Refer to ConsLog for Information Available to Bidders, including the geotechnical report. Please note that the geotechnical report found groundwater at relatively shallow depths. The Contractor will be responsible for all required shoring, stabilization, and dewatering required for construction.
D. The Contractor shall enclose the entire area of work with a temporary fence and maintain a safe pedestrian route along the rights of way adjacent to the site throughout construction.
E. Omitted.
F. Omitted.
G. Omitted.
H. Refer to the Specifications for required locations of concrete control joints and expansion joints. Submit a proposed control joint and expansion joint plan to the Architect for approval prior to installation of site concrete.
I. The new building and parking lot are parallel or perpendicular to true north.
J. The contractor shall install all components of the building and site to meet accessibility standards as shown in 2017 ICC A117.1.
K. In 575 South right-of-way, patch roadway as required by city standards after utilities and other right-of-way improvements have been removed, modified, or added.

Note

For site utility information, fire hydrants, storm drain information, storm drain structures, etc., see the Civil Engineer's sheets.
For concrete mow curbs, see the Landscape Architect's sheets.
Coordinated locations will be shown on the sheet prior to installation.

Site Data

	Square Feet	% of Site
Main building	18,298 SF	11.5%
Storage building	244 SF	0.2%
Asphalt Pavement	83,011 SF	52.3%
Concrete	15,616 SF	9.8%
Turfgrass	13,847 SF	8.7%
Other landscaping	27,739 SF	17.5%
Total site	**158,756 SF**	**3.64 acres**

Overexcavation and Fill Notes

A. For Overexcavation and Fill Detail, see F/C503.
B. Remove all unconsolidated fill and deleterious materials from the entire site prior to construction. Remove and stockpile topsoil as necessary for landscaped areas. For depth and locations of topsoil, see the Landscape Sheets and Specification Sections.
C. In the area of the building and mechanical enclosures:
   a. Overexcavate the entire footprint and 60" beyond at a 1:1 slope to the elevation as noted on F/C503.
   b. Install imported structural fill up to the bottom of footing level.
   c. Install imported structural fill up to the base course under the building slab.
D. At the storage building:
   a. Excavate the entire footprint of the storage building to an elevation 1 foot below the bottom of footings.
   b. Install imported structural fill up to the bottom of footing level.
   c. Install structural fill up to the base course under the storage building slab.
E. At the dumpster enclosure:
   a. Excavate the entire footprint of the dumpster enclosure to an elevation 1 foot below the bottom of footings.
   b. Install imported structural fill up to the bottom of footing level.
   c. Install structural fill to raise the grade to the base course under the dumpster slab and pad. See the Site Details for base course and concrete slab thickness.
F. At a 20 foot x 15 foot area in front of the dumpster [as shown on the Site Architectural Plans], install (2) 3" layers of asphalt with a 14" minimum base.
G. Install 8" crushed rock base beneath sidewalks at building entries, full width of sidewalk and full length of sidewalk from the building to the perimeter sidewalk.
H. All crushed rock base shall be 3/4" and shall be compacted by procedural compaction.
I. At sidewalks and all site concrete pads and elements:
   a. Overexcavate as noted in Item B. above.
   b. Install subbase up to the base level.
   c. Install 4" aggregate base below all site concrete elements, pads, and sidewalks. See site details.
J. At asphalt paving:
   a. Overexcavate as noted in Item B. above.
   b. Install subbase up to the base level.
   c. Install 3" asphalt paving over 9" base over entire parking lot (excluding the area in front of the dumpster enclosure).
K. All structural fill shall be imported.
L. Install imported structural fill full depth at all utility trenches.
M. All topsoil shall be imported. Provide topsoil tests and amendments as required by the Landscape Sheets and Specifications. Areas of landscaping without planting may have existing topsoil used as fill and may have existing topsoil left in place where compatible with finished grades."
N. All compacted soils shall be density tested.
O. On-site native soils may be used as fill only in landscape areas.
P. For the purposes of bidding, assume no unconsolidated fill or deleterious materials other than grubbing and typical removal of organics, etc., beyond that noted in the geotechnical report. A further geotechnical investigation will be completed shortly and the contract adjusted as necessary for its findings.

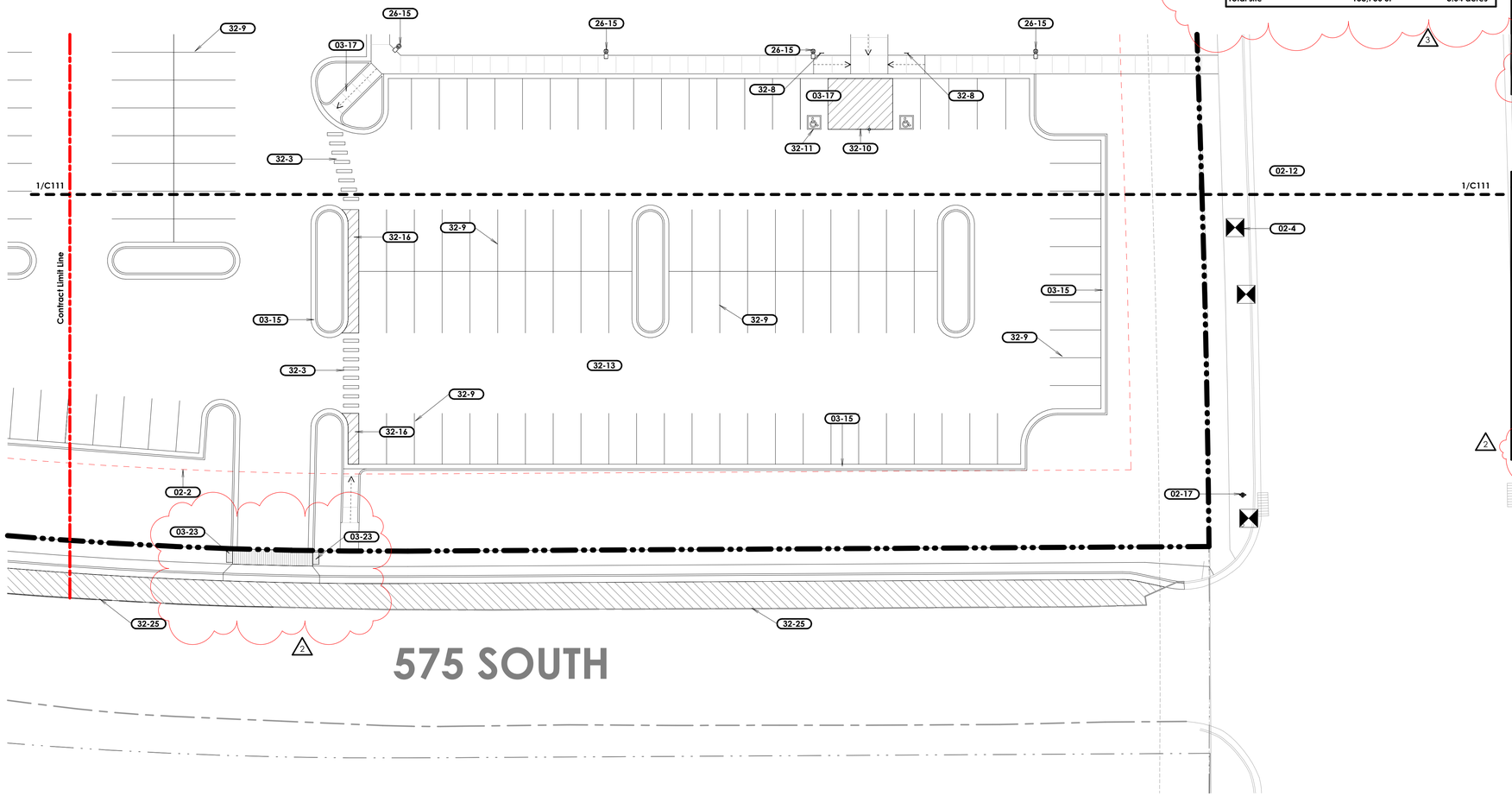

Keyed Notes

02-2	Existing utility easement. See survey and site utility plan.
02-4	Existing utility equipment to remain.
02-12	Existing sidewalk, curb and gutter to remain.
02-17	Existing fire hydrant to remain. See Site Survey.
03-15	New concrete curb & gutter - typical. See typical details C501 & infall / outfall notation on the Grading & Drainage Site Plans.
03-17	Sloped section of concrete sidewalk at <5% slope. See grading plan for exact slope.
03-23	Detecable warning panel. Detectable warnings shall consist of a surface of truncated domes and shall comply with city standards.
26-15	New pole light and concrete base. See D/C503 and electrical sheets.
32-3	New painted crosswalk.
32-8	New accessible parking sign. See A/C502.
32-9	New painted parking lines. Parking lines shall be 4" wide reflective white paint centered on top. Typical.
32-10	New accessible parking access aisle. Paint lines shall be 4" wide reflective white, at a 45Â° angle, and have 2'-0" spacing.
32-11	New blue & white painted accessible parking symbol.
32-13	New asphalt paving - typical. See F/C501 and overexcavation and fill notes.
32-16	Painted out "no parking" area. Paint lines shall be 4" wide reflective white, at a 45Â° angle, and have 2'-0" spacing.
32-25	New asphalt paving, striping, road base, and subgrade preparation per city standards. Sawcut and remove edge of existing asphalt paving per city standards.

2 Site Plan - South

Scale: 1" = 20'-0"

0' 10' 20' 40' 80'

W N E S

bhd ARCHITECTS
www.bhdarchitects.com
Phone 801.571.0010
Fax 801.571.0303
Toll Free 888.571.0010
65 East Wadsworth Park Drive
Suite 205 Draper, Utah 84020

LICENSED ARCHITECT Lafe Theodore Harris 29 Jan 2025 6282578-0301 STATE OF UTAH

THE CHURCH OF JESUS CHRIST OF LATTER-DAY SAINTS

Springwater 9
Vineyard UT Springwater Stake

Approx. 542 South Geneva Road
Vineyard, Utah 84059

Date: 15 Aug 2024
BHD #: 2346
County Parcel: 39-228-0001
Plan Series: G300-MH-11
Owner #: 502-2004

Drawing Issue and Revision Schedule

#	Date	Description
3	29 Jan 2025	Site Plan Review Responses
2	27 Aug 2024	Addendum #1
1	15 Aug 2024	Bid Documents

Site Plan - South

C112

Printed 1/29/2025 5:29:05 PM

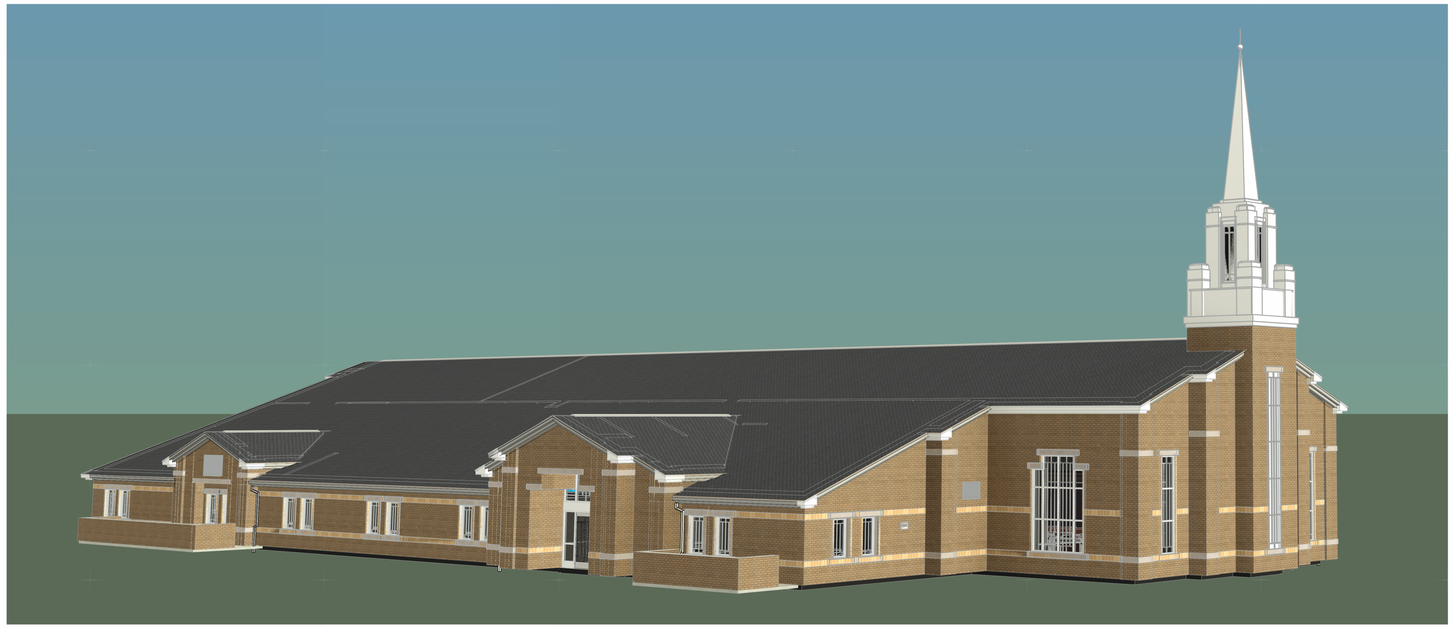

LOCATION MAP



GRAPHIC SYMBOLS/ MATERIALS LEGEND

FLOOR OR POINT ELEVATION
KEY NOTE
SPECIFICATION KEY NOTE
WALL TYPE
DOOR NUMBER
WINDOW NUMBER
FIXTURE TAG
REVISION TAG
DETAIL
INTERIOR ELEVATION
BUILDING ELEVATION
ROOM NAME & NUMBER
BUILDING SECTION
WALL SECTION
BUILDING GRID LINES
E.I.F.S.
CONCRETE MASONRY UNIT
BRICK VENEER
STONE VENEER
CONCRETE
GYPSUM BOARD OR GROUT
MORTAR
BATT INSULATION
RIGID INSULATION
PLYWOOD
ROUGH WOOD-CONTINUOUS
ROUGH WOOD-BLOCKING
WOOD TRIM
STEEL
GRAVEL
EARTH
CENTER LINE
WALL TYPE

ABBREVIATIONS

#	NUMBER	FLR.	FLOOR	RM.	ROOM
@	AT	FT.	FEET	R.O.	ROUGH OPENING
A.B.	ANCHOR BOLT	FTG.	FOOTING	SCHED.	SCHEDULE
ABV.	ABOVE	GA.	GAGE/GAUGE	SHT.	SHEET
ADJ.	ADJUSTABLE	GALV.	GALVANIZED	SIM.	SIMILAR
A.F.F.	ABOVE FINISH FLOOR	GPM	GALLONS PER MINUTE	SPEC.	SPECIFICATION
ALUM.	ALUMINUM	GND.	GROUND	STC	SOUND TRANSMISSION COEFFICIENT
BD.	BOARD	GOVT.	GOVERNMENT	STD.	STANDARD
BLDG.	BUILDING	GYP. BD.	GYPSUM WALL BOARD	STRUCT	STRUCTURAL
B.M.	BENCHMARK	HC.	HANDICAPPED	SUSP.	SUSPENDED
B.O.	BOTTOM OF	HDW.	HARDWARE	T.O.	TOP OF
BOT.	BOTTOM	H.M.	HOLLOW METAL	T.O.C.	TOP OF CURB
B.P.	BASE PLATE	HORIZ.	HORIZONTAL	T.O.F.	TOP OF FOOTING
BRG.	BEARING	HT.	HEIGHT	T.O.S.	TOP OF SLAB OR SIDEWALK
BTWN.	BETWEEN	HVAC	HEATING/VENTILATION/ AIR CONDITIONING	T.O.W.	TOP OF WALL
C.J.	CONSTRUCTION JOINT	HYD	HYDRANT	TYP.	TYPICAL
CLG.	CEILING	I.D.	INSIDE DIAMETER	U.N.O.	UNLESS NOTED OTHERWISE
CLR.	CLEAR	INFO.	INFORMATION	VERT.	VERTICAL
CMU	CONCRETE MASONRY UNIT	INSUL.	INSULATION	W/	WITH
COL.	COLUMN	LAV.	LAVATORY	WD.	WOOD
CONC.	CONCRETE	LT.	LIGHT	W.W.F.	WELDED WIRE FABRIC
CONT.	CONTINUOUS	LT. WT.	LIGHT WEIGHT		
CONST.	CONSTRUCTION	MAINT.	MAINTENANCE		
C.T.J.	CONTRACTION JOINT	MANUF.	MANUFACTURER		
DBL.	DOUBLE	MAX.	MAXIMUM		
DET./DTL.	DETAIL	MAT.	MATERIAL		
DIA.	DIAMETER	M.C.J.	MASONRY CONTROL JOINT		
DTL.	DETAIL	MECH.	MECHANICAL		
DWGS.	DRAWINGS	MIN.	MINIMUM		
E.F.	EACH FACE	MISC.	MISCELLANEOUS		
E.J.	EXPANSION JOINT	M.O.	MASONRY OPENING		
EL./ELEV.	ELEVATION	MTL.	METAL		
EQ.	EQUAL	N.I.C.	NOT IN CONTRACT		
E.S.	EACH SIDE	N.T.S.	NOT TO SCALE		
E.W.	EACH WAY	O.C.	ON CENTER		
EXIST.	EXISTING	O.D.	OUTSIDE DIAMETER		
EXPAN.	EXPANSION	O.F.	OUTSIDE FACE		
EXT.	EXTERIOR	PERP.	PERPENDICULAR		
E.W.C.	ELECTRIC WATER COOLER	PL.	PLATE		
F.D.	FLOOR DRAIN	PTD.	PAINTED		
FDN./FDTN.	FOUNDATION	QTY.	QUANTITY		
F.E.	FIRE EXTINGUISHER	R.D.	ROOF DRAIN		
F.E.C.	FIRE EXTINGUISHER CABINET	RAD.	RADIUS		
F.F.	FINISH FLOOR	REINF.	REINFORCED		
FIN.	FINISH	REQ'D	REQUIRED		

PROJECT TEAM

Architect
Lafe Harris — lafe@bhdarchitects.com
B H D Architects
65 East Wadsworth Park Drive, Suite 205 — Office - 801.571.0010
Draper, Utah 84020 — Mobile - 801.367.0608

Owner - Project Manager
Jeff Scott — scottjd@ChurchofJesusChrist.org
UT Salt Lake City PM Office
50 East North Temple Street COB12 — Office - 801.240.7153
Salt Lake City, Utah 84150-0012 — Mobile - 801.497.1901

Owner - Facilities Manager
Nick Cluff — CluffND@ChurchofJesusChrist.org
Orem UT FM Group
135 South 800 East — Phone - 801.222.3160
American Fork, Utah 840059 — Mobile - 801.750.1172

Surveyor
Nathan Weber — nate@diamondlandsurveying.com
Diamond Surveying
5243 S Green Pine Dr — Phone - 801.266.5099
Murray, Utah 84123 — Mobile - 801.455.9171

Soils Engineer
Michael Huber — mike@gshgeo.com
GSH Geotechnical Consultants
473 West 4800 South — Phone - 801.685.9190
Salt Lake City, Utah 84123 — Mobile - 801.243.9514

Civil Engineer
Daniel Canning — daniel@mcneileng.com
McNeil Engineering
8610 South Sandy Parkway, Suite 200 — Office - 801.255.7700
Sandy, Utah 84070 — Mobile - 801.984.2843

Landscape Architect
Cory Whiting — cwhiting@isdgllc.com
In Site Design Group
17 North 470 West — Office - 801.756.5043
American Fork, Utah 84003 — Mobile - 801.372.2548

Structural Engineer
Matthew Mcbride — mattm@arwengineers.com
ARW Engineers
1594 West Park Circle #100 — Office - 801.782.6008
Ogden, Utah 84404 — Mobile -

Fire Protection Consultant
Jeffrey DuBois — jdd@spectrum-engineers.com
Spectrum Engineers
324 South State Street, Suite 400 — Office - 801.328.5151
Salt Lake City, Utah 84111 — Mobile - 801.652.1467

Mechanical Engineer
Dave Hansen — dave@engsystems.com
Engineered Systems Associates
1355 East Center Street — Office - 208.233.0501
Pocatello, Idaho 83201 — Mobile - 208.313.1544

Electrical Engineer
David Hinckley — dgh@spectrum-engineers.com
Spectrum Engineers
324 South State Street, Suite 400 — Phone - 801.401.8435
Salt Lake City, Utah 84111 — Mobile - 801.201.8369

Acoustical Engineer
Aaron Abbott — awa@spectrum-engineers.com
Spectrum Engineers
324 South State Street, Suite 400 — Office - 801.401.8430
Salt Lake City, Utah 84111 — Mobile - 801.678.6383

DRAWING INDEX

GENERAL

SHEET #	SHEET NAME
G001	COVER SHEET
G101	CODE INFORMATION, SYMBOLS, EXITING AND OCCUPANCY PLAN
G102	CODE ANALYSIS
G103	ACCESSIBILITY - PUBLIC SPACES
G104	ACCESSIBILITY - PUBLIC SPACES

SITE

SHEET #	SHEET NAME
C101	SITE SURVEY
C102	SITE EXISTING CONDOTIONS PLAN
C111	SITE PLAN - NORTH
C112	SITE PLAN - SOUTH
C113	SITE DIMENSION PLAN - NORTH
C114	SITE DIMENSION PLAN - SOUTH
C121	GRADING AND DRAINAGE PLAN
C122	GRADING AND DRAINAGE PLAN
C151	SITE UTILITY PLAN
C171	EROSION CONTROL PLAN
C501	SITE DETAILS
C502	SITE DETAILS
C503	SITE DETAILS
C504	SITE DETAILS
C521	CIVIL DETAILS
C531	CIVIL DETAILS
C541	CIVIL DETAILS
C551	CIVIL DETAILS
C571	CIVIL DETAILS
C601	CIVIL NOTES
C801	STORAGE BUILDING

LANDSCAPE

SHEET #	SHEET NAME
LS101	LANDSCAPE PLAN
LS102	LANDSCAPE PLAN
LS201	IRRIGATION PLAN
LS202	IRRIGATION PLAN
LS301	LANDSCAPE DETAILS
LS401	IRRIGATION DETAILS
LS402	IRRIGATION DETAILS
LS403	IRRIGATION DETAILS

ARCHITECTURAL

SHEET #	SHEET NAME
A101	MAIN FLOOR PLAN
A102	ARCHITECTURAL SLAB PLAN
A103	MAIN FLOOR DIMENSION PLAN
A104	EQUIPMENT PLATFORM PLAN
A105	MAIN FLOOR WALL TYPES PLAN
A111	WALL TYPES
A112	WALL TYPES
A113	WALL TYPES
A121	ROOF PLAN
A122	ROOF DETAILS
A123	ROOF DETAILS
A151	REFLECTED CEILING PLAN
A152	LIGHT COVE AND CEILING TRIM DETAILS
A201	BUILDING ELEVATIONS
A202	BUILDING ELEVATIONS
A203	EXTERIOR PLAN DETAILS
A301	BUILDING SECTIONS
A302	BUILDING SECTIONS
A303	BUILDING SECTIONS
A304	BUILDING SECTION
A305	DETAILS
A306	STEEPLE PLANS, ELEVATIONS, SECTIONS AND DETAILS
A401	ENLARGED RESTROOM PLAN AND ELEVATIONS
A402	ENLARGED ROOM 153 PLAN AND DETAILS
A403	ENLARGED BISHOP, CLERK, AND MOTHER'S ROOM
A404	ENLARGED SERVING AREA AND MEMBER CUSTODIAL
A405	INTERIOR ELEVATIONS AND DETAILS
A406	ENLARGED ROSTRUM PLAN AND ELEVATIONS
A407	ROSTRUM FRONT WALL ELEVATION DETAILS
A408	ROSTRUM CASEWORK ELEVATIONS
A409	ROSTRUM CASEWORK ELEVATIONS AND DETAILS
A410	ROSTRUM CASEWORK DETAILS
A411	ROSTRUM CASEWORK DETAILS
A412	CHILDRENS LECTERN AND TABLETOP LECTERN CASEWORK
A413	STAIR SECTIONS
A501	ARCHITECTURE DETAILS
A502	ARCHITECTURE DETAILS
A503	ARCHITECTURE DETAILS
A601	DOOR SCHEDULE & DETAILS
A602	WINDOW DETAILS
A603	STOREFRONT DETAILS
A604	DOOR AND WINDOW DETAILS

FURNISHINGS

SHEET #	SHEET NAME
F101	FURNISHINGS PLAN AND SCHEDULES
F102	ROOM SIGNAGE LOCATION PLAN
F103	ROOM SIGNAGE & FINISH SCHEDULE AND DETAILS

STRUCTURAL

SHEET #	SHEET NAME
S101	FOOTING AND FOUNDATION PLAN
S102	ANCHOR BOLT HOLDDOWN AND WALL TYPE PLAN
S103	ROSTRUM AND PLATFORM FRAMING PLAN
S104	EQUIPMENT PLATFORM FRAMING PLAN
S105	ROOF FRAMING PLAN
S106	ENLARGED ENTRY ROOF FRAMING PLANS
S201	TRUSS ELEVATIONS
S202	TRUSS ELEVATIONS
S203	TRUSS ELEVATIONS
S204	TRUSS ELEVATIONS
S205	TRUSS ELEVATIONS
S206	TRUSS ELEVATIONS
S401	STEEPLE PLATFORM, FRAMING AND DETAILS
S402	STEEPLE DETAILS
S501	FOUNDATION DETAILS
S502	FOUNDATION DETAILS
S503	FOUNDATION DETAILS
S504	FOUNDATION DETAILS
S511	ROSTRUM AND PLATFORM DETAILS
S512	ROSTRUM AND PLATFORM DETAILS
S513	EQUIPMENT PLATFORM FRAMING DETAILS
S514	EQUIPMENT PLATFORM FRAMING DETAILS
S521	ROOF DETAILS
S522	ROOF DETAILS
S523	ROOF DETAILS
S524	ROOF DETAILS
S601	SCHEDULES
S602	SCHEDULES
S603	SCHEDULES
S604	SCHEDULES

FIRE SPRINKLERS

SHEET #	SHEET NAME
FS101	MAIN FLOOR FIRE SPRINKLER PLAN
FS102	MEZZANINE LEVEL FIRE SPRINKLER PLAN
FS301	FIRE SPRINKLER SECTIONS
FS501A	FIRE SPRINKLER DETAILS
FS501B	FIRE SPRINKLER DETAILS

PLUMBING

SHEET #	SHEET NAME
P100	BELOW-GRADE PLUMBING PLAN
P101	MAIN FLOOR PLUMBING PLAN
P102	EQUIPMENT PLATFORM PLUMBING PLAN
P401	LARGE SCLAE PLUMBING PLANS
P501	PLUMBING DETAILS
P502	PLUMBING DETAILS
P601	PLUMBING SCHEDULES AND GAS PIPING SCHEMATIC

MECHANICAL

SHEET #	SHEET NAME
M101	MAIN FLOOR MECHANICAL PLAN
M102	EQUIPMENT PLATFORM MECHANICAL PLAN
M301	MECHANICAL SECTIONS
M302	MEHCANICAL SECTIONS
M501	MECHANICAL DETAILS
M502	MECHANICAL DETAILS
M503	MECHANICAL DETAILS
M601	MECHANICAL SCHEDULES
ME101	AUTOMATIC TEMPERATURE CONTROL PLANS
ME701	AUTOMATIC TEMPERATURE CONTROL WIRING AND SCHEDULES
ME702	AUTOMATIC TEMPERATURE CONTROL WIRING
ME703	AUTOMATIC TEMPERATURE CONTROL WIRING
ME704	AUTOMATIC TEMPERATURE CONTROL WIRING
ME705	AUTOMATIC TEMPERATURE CONTROL WIRING

ELECTRICAL

SHEET #	SHEET NAME
E101	MAIN FLOOR POWER PLAN
E104	EQUIPMENT PLATFORM ELECTRICALPLAN
E111	ELECTRICAL SITE PLAN - NORTH
E112	ELECTRICAL SITE PLAN - SOUTH
E151	MAIN FLOOR LIGHTING PLAN
E501	ELECTRIC DETAILS
E502	TRANSFORMER PAD DETAILS
E601	SCHEDULES & SYMBOLS
E602	PANEL SCHEDULES
E603	PANEL SCHEDULES
E604	LIGHTING FIXTURE SCHEDULE
E605	POWER SINGLE LINE DIAGRAM
E606	LIGHTING CONTROL WIRING DIAGRAMS

TECHNOLOGY

SHEET #	SHEET NAME
ET101	MAIN FLOOR AV ROUGH-IN FLOOR PLAN
ET102	MAIN FLOOR AV ROUGH-IN CEILING PLAN
ET601	SCHEDULES, NOTES, DETAILS AND DIAGRAM
ET602	AV ROUGH-IN DETAILS
TA501	AV SYSTEMS DETAILS
TA601	AV SYSTEMS SCHEDULES AND NOTES
TA602	AV SYSTEMS DIAGRAMS
TA603	AV SYSTEMS DIAGRAMS
TT601	TELECOM SCHEDULES, NOTES
TT602	TELECOM DETAILS AND DIAGRAMS

FIRE DETECTION

SHEET #	SHEET NAME
FA101	FIRE ALARM

Work by Owner

Item	Furnished by	Installed by	Item	Furnished by	Installed by
Special inspections and testing	Owner	Owner	Basketball backstops, equipment	Owner	Owner
HVAC test and balance	Owner	Owner	Volleyball sleeves, volleyball equipment	Owner	Contractor
Hymn number display	Owner	Owner	Artwork	Owner	Owner
Carpet and carpet base	Owner	Owner	Piano, organ	Owner	Owner
Fixed glass display boards	Owner	Contractor	Phone and computer systems	Owner	Owner
Fixed tackboards	Owner	Contractor	Internet firewall, network switch, wireless access points	Owner	Contractor
Display cases	Owner	Contractor	Access control system	Owner	Owner
Interior signage	Owner	Contractor	Internet service provider modem	Owner	Owner
Pews	Owner	Owner	Televisions, television brackets	Owner	Contractor
Soap, paper towel, and toilet tissue dispensers	Owner	Owner	High security cylinders and cores	Owner	Owner
Baby changing stations	Owner	Contractor	Network streaming equipment	Owner	Owner
Refrigerator, range, microwave	Owner	Contractor	Roof access ladder anchor	Owner	Contractor
Projection screen	Owner	Contractor			
Key cabinet	Contractor	Owner			

bhd ARCHITECTS
www.bhdarchitects.com
Phone 801.571.0010
Fax 801.571.0303
Toll Free 888.571.0010
65 East Wadsworth Park Drive
Suite 205 Draper, Utah 84020

LICENSED ARCHITECT — Lafe Theadore Harris — 15 Aug 2024 — 8878-0301 — STATE OF UTAH

THE CHURCH OF JESUS CHRIST OF LATTER-DAY SAINTS

Springwater 9
Vineyard UT Springwater Stake
Approx. 542 South Geneva Road
Vineyard, Utah 84059

Owner #: 502-2004
Plan Series: G300-MH-11
County Parcel: 39-228-0001
BHD #: 2346
Date: 15 Aug 2024

Drawing Issue and Revision Schedule

#	Date	Description

COVER SHEET

G001

8/15/2024 2:26:53 PM

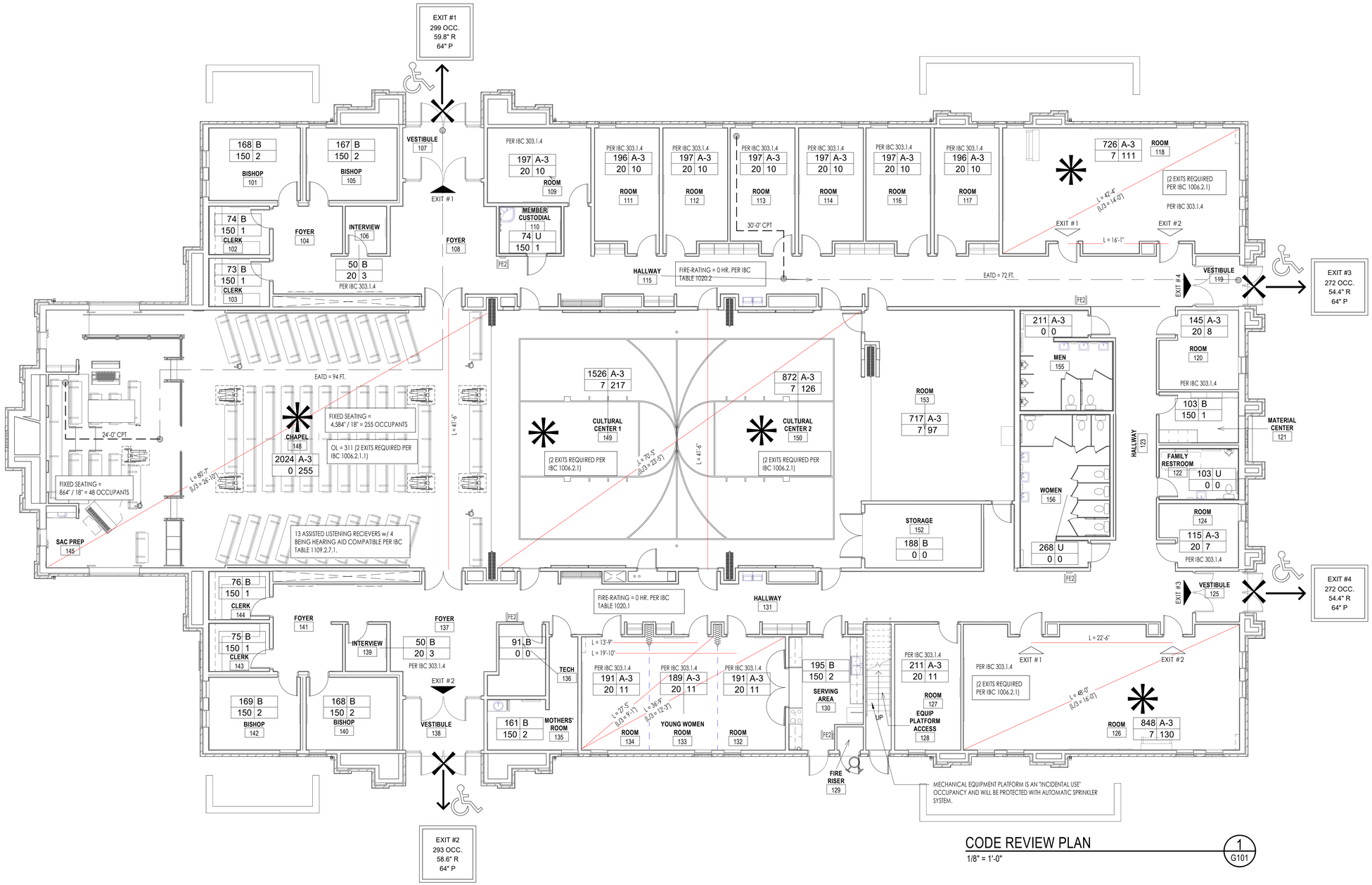

CODE REVIEW PLAN

1/8" = 1'-0"

1 / G101

CODE ANALYSIS LEGEND

EXIT
166 OCC.
3'-0"R
4'-0"P
(LOCATION SHOWN BY LARGE ARROW)
MAXIMUM OCCUPANT LOAD THRU EXIT
MINIMUM REQUIRED EXIT WIDTH
EXIT WIDTH PROVIDED

CPT — CPT
COMMON PATH OF TRAVEL AS PER TABLE 1006.2.1

EXIT ACCESS TRAVEL DISTANCE AS PER TABLE 1017.2

ROOM/AREA SQUARE FOOTAGE

SF | OCC
OLF | OL
OCCUPANCY GROUP
OCCUPANT LOAD
OCCUPANCY LOAD FACTOR
(n=NET sf, g=GROSS SF)

ROOM/AREA REQUIRED EXIT

BUILDING REQUIRED EXIT

ED
EXIT DISCHARGE TO PUBLIC WAY - IBC 1028

FIRE DEPARTMENT CONNECTION (FDC)

FE1
ONE-HOUR FIRE RATED RECESSED FIRE EXTINGUISHER CABINET AND FIRE EXTINGUISHER FIRE EXTINGUISHER - 2A: 10BC

FE2
NON-RATED RECESSED MOUNTED FIRE EXTINGUISHER CABINET AND FIRE EXTINGUISHER FIRE EXTINGUISHER - 2A: 10BC

ROOMS WITH AN OCCUPANT LOAD OF 50 OR MORE IN GROUP A OCCUPANCY SHALL HAVE TWO EXITS (IBC 2021 SECTION 1006.1)

REQUIRED EXIT LIGHT LOCATIONS. SEE IBC 2021 SECTION 1013. (SHOWN ON ELECTRICAL DRAWINGS)

ACCESSIBLE ELEMENT

NON-ACCESSIBLE ELEMENT

PANIC HARDWARE REQUIRED

GENERAL NOTES

1- SEE G102 FOR COMPLETE WRITTEN CODE ANALYSIS & REVIEW - ALL AREAS SHOWN HERE ARE REFERENCED WITHIN CODE ANALYSIS.

2- CODE ANALYSIS BASED ON IBC 2021 REQUIREMENTS.

SIGNAGE

SEE SIGNAGE SCHEDULE AND LAYOUT ON SIGNAGE SHEETS

1. ACCESSIBILITY SIGNAGE: PROVIDE SIGNAGE TO MEET THE REQUIREMENTS OF ANSI 117.1-2017. PROVIDE SIGNAGE FOR ACCESSIBLE ENTRANCES, RESTROOMS, ETC.
2. BUILDING ADDRESS: APPROVED NUMBERS OR ADDRESSES SHALL BE PROVIDED IN SUCH A POSITION AS TO BE CLEARLY VISIBLE AND LEGIBLE FROM THE STREET OR ROADWAY FRONTING THE PROPERTY IN COMPLIANCE WITH IBC 2021 SECTION 502.1.
3. EXIT SIGNS - SEE SIGNAGE SCHEDULE.

PROJECT SUMMARY:
CONSTRUCTION TYPE: VB
FIRE SPRINKLER: NFPA 13
OCCUPANCY'S: A-3, B (NON-SEPARATED)
OCCUPANCY LOAD (AREA): A-3 = 1,120
B = 16
TOTAL OCCUPANCY LOAD = **1,136**

bhd ARCHITECTS
www.bhdarchitects.com
Phone 801.571.0010
Fax 801.571.0303
Toll Free 888.571.0010
65 East Wadsworth Park Drive
Suite 205 Draper, Utah 84020

LICENSED ARCHITECT
Lafe Theadore Harris
15 Aug 2024
No. 8878-0301
STATE OF UTAH

THE CHURCH OF JESUS CHRIST OF LATTER-DAY SAINTS

Springwater 9
Vineyard UT Springwater Stake
Approx. 542 South Geneva Road
Vineyard, Utah 84059

Owner #: 502-2004
Plan Series: G300-MH-11
County Parcel: 39-228-0001
BHD #: 2346
Date: 15 Aug 2024

Drawing Issue and Revision Schedule

#	Date	Description

CODE INFORMATION, SYMBOLS, EXITING AND OCCUPANCY PLAN

G101

8/15/2024 1:05:36 PM

CODE ANALYSIS

Abbreviations

N/A	Not Applicable as part of this Project
AGP	Above Grade Plan - Story
FDVA	Fire Department Vehicle Access
FSD	Fire Separation Distance
AHJ	Authority Having Jurisdiction
OL	Occupant Load

Applicable Codes:

2021	IBC	International Building Code
2021	IFC	International Fire Code
2021	IPC	International Plumbing Code
2021	IMC	International Mechanical Code
2020	NEC	National Electrical Code
2021	IFGC	International Fuel Gas Code
2021	IECC	International Energy Conservation Code: Commercial
2017	ANSI	ICC/American National Standard A117.1 + ADDAG

Amendments (State or Local, Building Code Amendments - www.dopl.utah.gov)

(Chap. 3) Use and Occupancy Classification

Occupancy	Occupancies	Fire Separation(Table 508.4)
A-3	A-3 / B	0 hr. see exception*
B		

* 303.1.1 Small buildings and tenant spaces: A building or space used for assembly purposes with OL<50 shall be classified as a B occupancy.

* 303.1.4 Accessory to places of religious worship: Accessory religious educational rooms and religious auditoriums with OL<100/ room or space are not considered separate occupancies.

(Chap. 4) Special Detailed Requirements Based on Use & Occupancy

None apply for places of religious worship or business type occupancies

(Chap. 5) General Building Heights and Areas

Allowable height, stories, and area (Table 504.3, 504.4, 506.2) - VB, Sprinklered

Occupancy:	Height (ft)	Story	Allowable Area	Actual	Ratio
A-3	60	2	24,000 S.F.	17,324 S.F.	0.722
B	60	3	36,000 S.F.		

Actual height, stories and area

Occupancy	Height (ft)	Story	Area (sf) Outside of Foundation
A-3	29	1	18,315

508.3.1 Non-separated occupancy structure

505.3 Equipment Platforms in building shall not be considered as a portion of the floor below. Such equipment platforms shall not contribute to either building area or the number of stories.

505.3.1 Area of Equipment Platform - 3,491 Sq. Ft. < 3,979 Sq. Ft.
Room Below = 5,968 * 2/3 = 3,979 Sq. Ft.

(Chap. 6) Types of Construction

Occupancy	Const. Type	Fire-Resistance Rating for Building Elements (Table 601)	Type V-B
A-3	V-B	Primary structural frame	0
B	V-B	Bearing walls Exterior	0
		Bearing walls Interior	0
		Nonbearing walls and partitions Exterior	Table 705.5
		Nonbearing walls and partitions Interior	0
		Floor construction and secondary members	0
		Roof construction and secondary members	0

(Chap. 7) Fire and Smoke Protection Features

Fire-resistance of exterior walls (Table 705.5)

	A-3	B
X>30'	0	0

(Chap. 7) Fire and Smoke Protection Features (cont.)

704.2 Column Protection - NA

704.3 Protection of the Primary Structural Frame other than Columns - NA

704.10 Exterior Structural Members - NA

705 Exterior Walls

705.2 Projections: Shall not extend closer to FSD than Table 705.2 - NA

705.5 Fire-resistance ratings: > 10 ft. exterior wall rated for exposure from inside only - NA

Table 705.8 Maximum Area of Exterior Wall based on fire separation distance

Greater than 30' - No Limit

705.8.5 Vertical Separation of Openings - NA

713.4 Fire-resistance rating of Shafts - NA

718 Concealed Spaces

718.2 Fireblocking - Required throughout

718.3 Draftstopping in floors

718.3 Exception - Not required if building is equipped throughout with an automatic sprinkler system

718.4 Draftstopping in attics

718.4 Exception - Not required if building is equipped throughout with an automatic sprinkler system

(Chap. 8) Interior Finishes

Interior wall and ceiling finish requirements by occupancy (Table 803.13)

Occupancy	Exiting Elements	Corridors	Room & Enclose Spaces
A-3	B	B	C
B	B	C	C

(Chap. 9) Fire Protection Systems

903 Automatic Sprinkler Systems

903.2.1.3 Automatic sprinkler systems required in A-3 occupancy

903.3.1.1 Standard - NFPA 13

906.1 Portable Fire Extinguishers - Where required

A-3 - Class A, Ordinary Hazard

B - Class A, Ordinary Hazard

Class A, Ordinary Hazard Fire Extinguisher Requirements

Rated: 2-A

Max. Floor Area per Unit of A = 1,500 sf

Max. Floor Area for Extinguisher = 11,500 sf

Max. Travel Distance = 75 feet

907.2 Fire Alarm and Detection Systems - Where required

A-3 - OL> 1000

Installed per IBC and NFPA 72

(Chap. 10) Means of Egress

Table 1004.5 - Occupant Load: See drawing sheet G101 for floor plan showing occupant loads for each room.

1005 Means of Egress Sizing: 0.3" x OL for stairs and 0.2" x OL for other egress components. See drawing sheet G101 floor plan showing stairs and egress components and width required and width provided.

Table 1006.2.1 Maximum Common Path of Egress Travel Distance

A-3	75' (with sprinkler system)
B	100' (with sprinkler system)

Table 1006.3.2 Minimum Number of Exits or Access to Exits Per Story

Occupant Load 1136 - 4 Exits Required, 4 Provided

1009 Accessible Means of Egress

1009.1 Need (1) accessible means of egress/space min. or (2) when two exits are required.

1009.2 Continuity and Components: Each required accessible means of egress shall be continuous to a public way.

(Chap. 10) Means of Egress (cont.)

Table 1017.2 Exit Travel Distance

A-3	250' (with sprinkler system)
B	300' (with sprinkler system)

Table 1020.1 Corridor Fire-resistance Rating

A-3	OL > 30 = 0 hr. (with sprinkler system)
B	OL > 30 = 0 hr. (with sprinkler system)

Table 1020.2 Minimum Corridor Width

Any facilities not listed below	44"
Access to mechanical, plumbing, or electrical equipment	24"
With occupant load less than 50	36"

1029 Assembly

1030.2 Main exit required when OL > 300. Must be of sufficient capacity to accommodate 1/2 the OL

1029.3 Other exists required when OL > 300. Must be of sufficient capacity to accommodate 1/2 the OL

1030.7 Travel distance: 250' max to an exit in sprinklered building

1030.8 Common path of egress travel: 30' max. from any seat to two paths of egress travel to two exits

1030.15 Seat Stability: A-3 occupancy - seats shall be securely fastened to the floor

(Chap. 11) Accessibility

1103 Scoping Requirements

1103.1 Facility and site required to be accessible

1104 Accessible Route

1104.1 Site arrival points: 1 required

1104.3 Connected spaces: All spaces are required to be accessible and connected by an accissible route

1105 Accessible Entrances

1105.1 Public Entrances: At least 60% of all public entrances shall be accessible

1108 Special Occupancies

Table 1108.2.2.1 Accessible wheelchair spaces

Assembly area capacity = 311 6 spaces required

Table 1108.2.7.1 Receivers for assistive listening systems

Assembly area capacity = 311 14 receivers required

Assembly area capacity = 311 4 receivers to be hearing-aid compatible

1109 Other features and facilities

1110.2 Toilet and bathing facilities: One type of each fixture, element, control or dispenser shall be accessible

1110.2.1 Family or assisted-use toilet: Family or assisted-use toilet is required in A occupancy where > 6 WC are required

1110.2.4 Water closet compartment: One WC must be accessible. If WC + urinals > 6, provide one ambulatory access. WC

1110.2.5 Lavatories: At least 5%, but not less than one shall be accessible

1110.4 Kitchens and kitchenettes: Shall be accessible

(Chap. 12) Interior Environment

1202 Ventilation

1202.2 Ventilation required: The net free ventilating area shall be not less than 1/150 of the area of the space ventilated

Exception #1: 1/300 allowed when 50%-80% of venting area is 3' above eave vent

Exception #2: 1/300 allowed when Class I or II vapor barrier provided

Attic area = 17,304 sf /300 = 57.68 sf x 144 = 8,305 sq. inches required

Ridge Vent - Net Free Area = 35 sq. in./LF x 262' = 9,170 sq. inches

Soffit Vent - Net Free Area = 8.8 sq. in./LF x 495' = 4,356 sq. inches

Ventilation Provided = 13,526 sq. inches

(Chap. 29) Plumbing Systems

Table 2902.1 Minimum number of required plumbing fixtures

Occ. Type	Occ. Load	Water Closets M	Water Closets W	Lavatories M	Lavatories W	DF	Service Sink
A-3	M-560, W-560	560/150=3.73	560/75=7.47	560/200=2.80	560/200=2.80	1120/1000=1.12	
B	M-8, W-8	8/25=0.32	8/25=0.32	8/40=0.2	8/40=0.2	16/100=0.16	
	Total Req.	4.05	7.79	3.00	3.00	1.28	1
	Provided	5	8	4	4	4	1

bhd ARCHITECTS
www.bhdarchitects.com
Phone 801.571.0010
Fax 801.571.0303
Toll Free 888.571.0010
65 East Wadsworth Park Drive
Suite 205 Draper, Utah 84020

LICENSED ARCHITECT Lafe Theadore Harris 15 Aug 2024 (Reg.#8878-0301) STATE OF UTAH

THE CHURCH OF JESUS CHRIST OF LATTER-DAY SAINTS

Springwater 9
Vineyard UT Springwater Stake

Approx. 542 South Geneva Road
Vineyard, Utah 84059

Plan Series: G300-MH-11
Owner #: 502-2004
County Parcel: 39-228-0001
BHD #: 2346
Date: 15 Aug 2024

Drawing Issue and Revision Schedule

#	Date	Description

CODE ANALYSIS

G102

8/15/2024 1:05:37 PM

ACCESSIBLE COMMON SPACE REQUIREMENTS BASED ON ICC/ANSI A117.1-2017

NOTES:

1- SOME ITEMS MAY NOT BE USED IN CURRENT PROJECT.
2- USED FOR HEIGHTS ONLY.
3- SEE SPECIFICATIONS FOR TYPE OF ITEM REQUIRED.
4- WHEN MULTIPLE ITEMS ARE PROVIDED ONLY ONE ITEM PER ROOM NEEDS TO FOLLOW THESE ADA HEIGHTS.

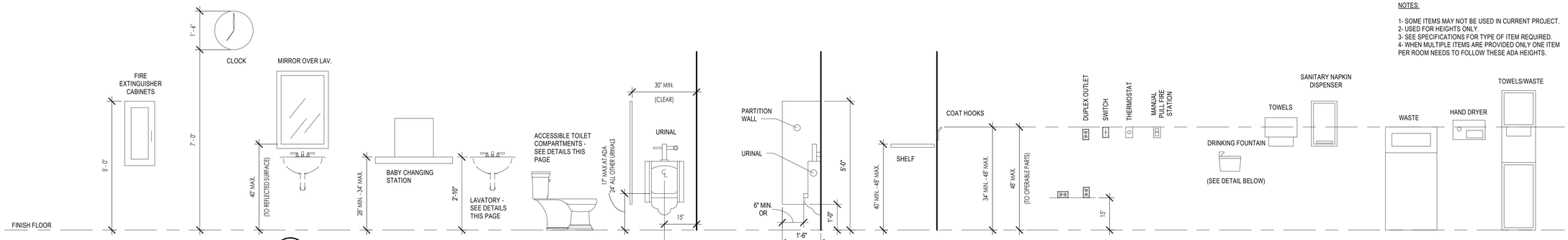

ACCESSIBILITY - TYPICAL MOUNTING HEIGHTS
1/2" = 1'-0" — A G103

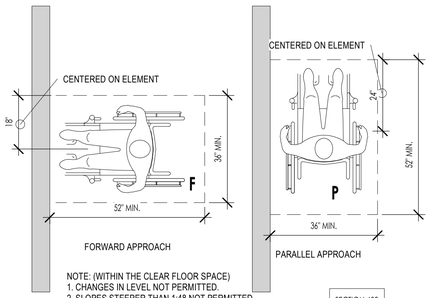

NOTE: (WITHIN THE CLEAR FLOOR SPACE)
1. CHANGES IN LEVEL NOT PERMITTED.
2. SLOPES STEEPER THAN 1:48 NOT PERMITTED.
3. CAN INCLUDE KNEE AND TOE CLEARANCE, U.N.O.
4. EITHER APPROACH CAN BE USED AT AN ELEMENT, U.N.O.
5. DOORS CAN SWING INTO CLEAR FLOOR SPACE, U.N.O.

SECTION 602

CLEAR FLOOR SPACE
1/2" = 1'-0" — B G103

F = FORWARD APPROACH
P = PARALLEL APPROACH

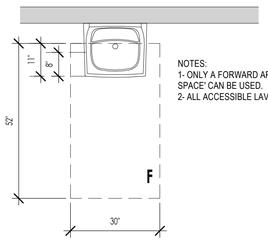

NOTES:
1- ONLY A FORWARD APPROACH 'CLEAR FLOOR SPACE' CAN BE USED.
2- ALL ACCESSIBLE LAVATORIES MUST COMPLY.

SECTION 606

PUBLIC LAVATORY
1/2" = 1'-0" — C G103

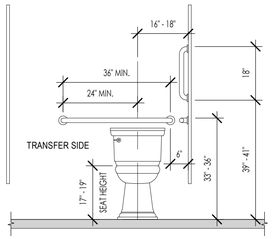

SECTION 603 & 604.9

ACCESSIBLE STALLS
1/2" = 1'-0" — D G103

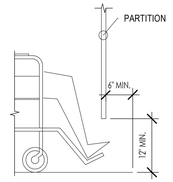

SECTION 604.9

TOILET STALL TOE CLEARANCE
3/4" = 1'-0" — E G103

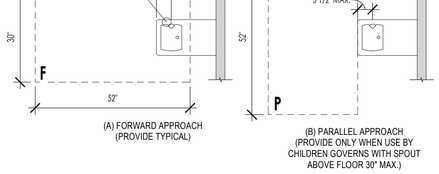

SECTION 602

PUBLIC DRINKING FOUNTAIN
1/2" = 1'-0" — F G103

NOTES:
1- AREA REQUIRED FOR KNEE AND TOE CLEARANCE - 30" WIDE MIN.

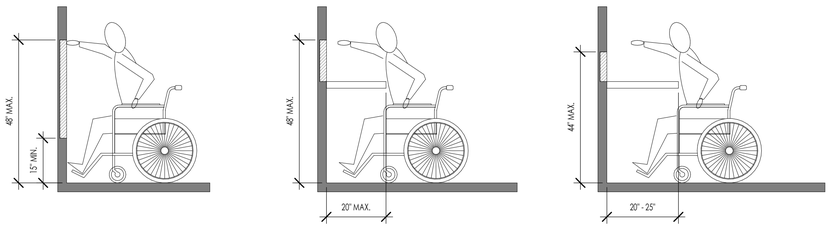

A. UNOBSTRUCTED FORWARD REACH | **B. OBSTRUCTED HIGH FORWARD REACH** | **C. OBSTRUCTED HIGH FORWARD REACH**

SECTION 308

REACH RANGES FOR FORWARD REACH
1/2" = 1'-0" — G G103

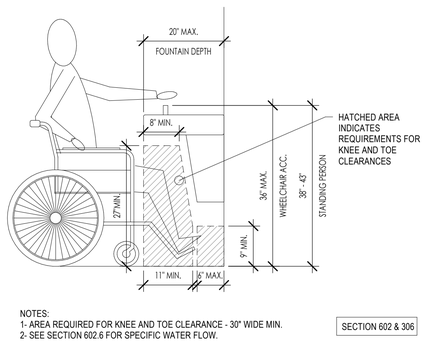

NOTES:
1- AREA REQUIRED FOR KNEE AND TOE CLEARANCE - 30" WIDE MIN.
2- SEE SECTION 602.6 FOR SPECIFIC WATER FLOW.

SECTION 602 & 306

PUBLIC DRINKING FOUNTAIN
3/4" = 1'-0" — K G103

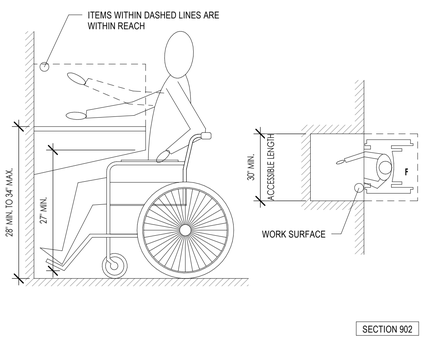

SECTION 902

WORK SURFACE
3/4" = 1'-0" — L G103

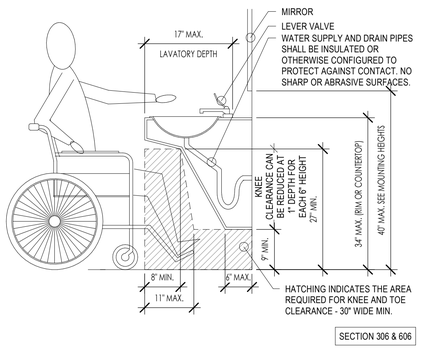

SECTION 306 & 606

PUBLIC LAVATORY
3/4" = 1'-0" — M G103

NOTES:
1- AREA REQUIRED FOR KNEE AND TOE CLEARANCE - 30" WIDE MIN.
2- IMAGES A-C REQUIRE A PARALLEL "CLEAR FLOOR SPACE".

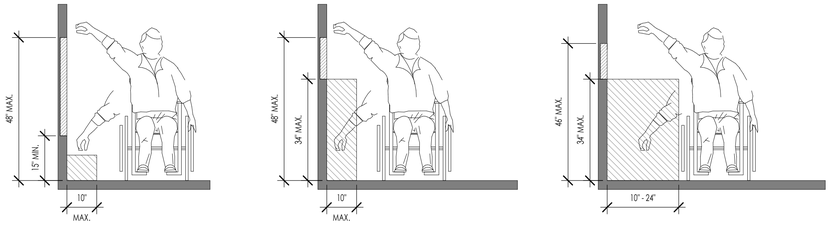

A. UNOBSTRUCTED SIDE REACH | **B. OBSTRUCTED SIDE REACH** | **C. OBSTRUCTED HIGH SIDE REACH**

SECTION 308

REACH RANGES FOR SIDE REACH
1/2" = 1'-0" — H G103

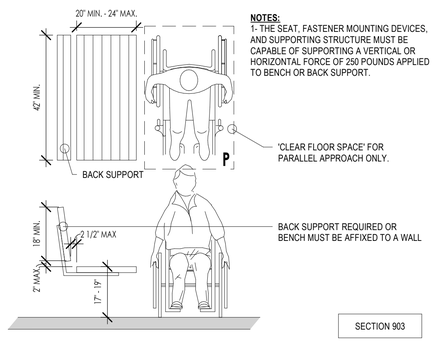

NOTES:
1- THE SEAT, FASTENER MOUNTING DEVICES, AND SUPPORTING STRUCTURE MUST BE CAPABLE OF SUPPORTING A VERTICAL OR HORIZONTAL FORCE OF 250 POUNDS APPLIED TO BENCH OR BACK SUPPORT.

SECTION 903

ACCESSIBLE BENCHES
1/2" = 1'-0" — N G103

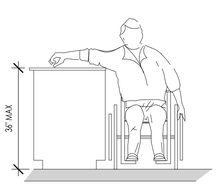

NOTES:
1- EITHER FORWARD OR THE PARALLEL 'CLEAR FLOOR SPACES' ARE ACCEPTABLE.

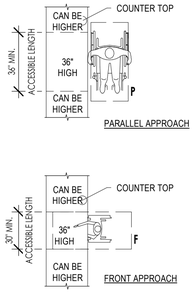

SECTION 904

SERVICE COUNTER
1/2" = 1'-0" — J G103

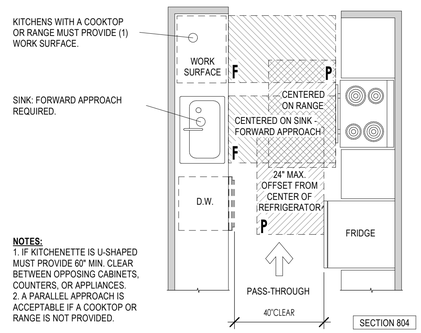

NOTES:
1. IF KITCHENETTE IS U-SHAPED MUST PROVIDE 60" MIN. CLEAR BETWEEN OPPOSING CABINETS, COUNTERS, OR APPLIANCES.
2. A PARALLEL APPROACH IS ACCEPTABLE IF A COOKTOP OR RANGE IS NOT PROVIDED.

SECTION 804

KITCHENETTE CLEARANCES
3/8" = 1'-0" — P G103

bhd ARCHITECTS
www.bhdarchitects.com
Phone 801.571.0010
Fax 801.571.0303
Toll Free 888.571.0010
65 East Wadsworth Park Drive
Suite 205 Draper, Utah 84020

LICENSED ARCHITECT — Lafe Theadore Harris — 15 Aug 2024 — 7899-0301 — STATE OF UTAH

THE CHURCH OF JESUS CHRIST OF LATTER-DAY SAINTS

Springwater 9
Vineyard UT Springwater Stake
Approx. 542 South Geneva Road
Vineyard, Utah 84059

Owner #: 502-2004
Plan Series: G300-MH-11
County Parcel: 39-228:0001
BHD #: 2346
Date: 15 Aug 2024

Drawing Issue and Revision Schedule

#	Date	Description

ACCESSIBILITY - PUBLIC SPACES

G103

8/15/2024 1:05:39 PM

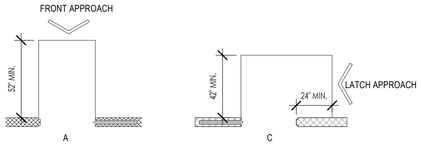

SLIDING AND FOLDING DOORS
FRONT APPROACH

SLIDING AND FOLDING DOORS STOP OR
LATCH APPROACH

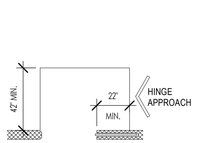

SLIDING AND FOLDING DOORS
POCKET OR HINGE APPROACH

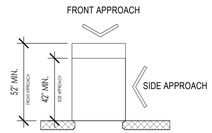

NOTE:
DOORWAYS WITHOUT DOORS THAT ARE LESS THAT 36 INCHES IN WIDTH SHALL HAVE MANEUVERING CLEARANCES AS SHOWN. (ICC/ANSI A117.1 SECTION 404.2.3.3)

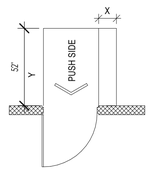

NOTE: X=12" IF DOOR HAS
BOTH CLOSER AND LATCH

B
FRONT APPROACH-SWINGING DOORS
PUSH SIDE

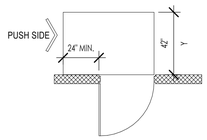

NOTE: Y=48" MIN. IF DOOR
HAS BOTH LATCH AND CLOSER

E
HINGE SIDE APPROACH-SWINGING DOORS
PUSH SIDE

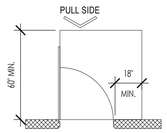

FRONT APPROACH-SWINGING DOORS
PULL SIDE

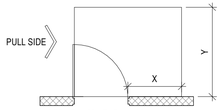

NOTE: IF Y=60", THEN X=36"
IF Y=54", THEN X=42"

D / E
HINGE SIDE APPROACH-SWINGING DOORS
PULL SIDE

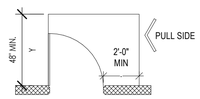

NOTE: Y=54" IF DOOR HAS CLOSER

G
LATCH SIDE APPROACH-SWINGING DOORS

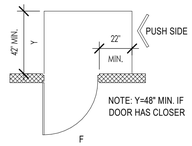

NOTE: Y=48" MIN. IF
DOOR HAS CLOSER

F
LATCH SIDE APPROACH-SWINGING DOORS

ICC/ANSI A117.1-2009 SECTION 404.2.3

MANUEVERING CLEARANCES
1/4" = 1'-0"
C G104

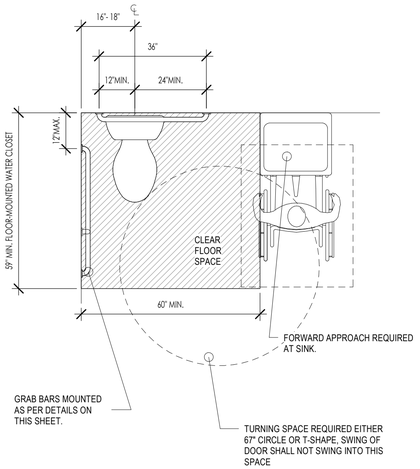

ICC/ANSI FIGURE 604.3

NOTES:

1- 604.3.2 OVERLAP. THE REQUIRED CLEARANCE AROUND THE WATER CLOSET SHALL BE PERMITTED TO OVERLAP THE WATER CLOSET, ASSOCIATED GRAB BARS, PAPER DISPENSERS, SANITARY NAPKIN RECEPTACLES, COAT HOOKS, SHELVES, ACCESSIBLE ROUTES, CLEAR FLOOR SPACE AT OTHER FIXTURES, AND THE TURNING SPACE. NO OTHER FIXTURES OR OBSTRUCTIONS SHALL BE WITHIN THE REQUIRED WATER CLOSET CLEARANCE.

2- 604.6 FLUSH CONTROLS. FLUSH CONTROLS SHALL BE HAND OPERATED OR AUTOMATIC. HAND OPERATED FLUSH CONTROLS SHALL COMPLY WITH SECTION 309. FLUSH CONTROLS SHALL BE LOCATED ON THE OPEN SIDE OF THE WATER CLOSET.

SECTION 603 & 604

PUBLIC WATER CLOSETS
1/2" = 1'-0"
D G104

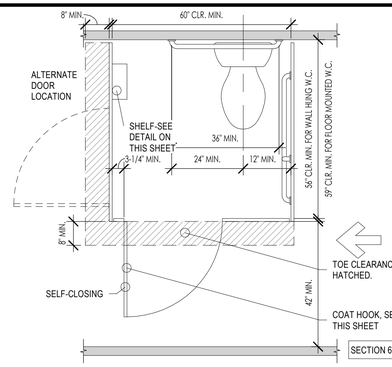

SECTION 603 & 604.9

ACCESSIBLE STALLS
1/2" = 1'-0"
A G104

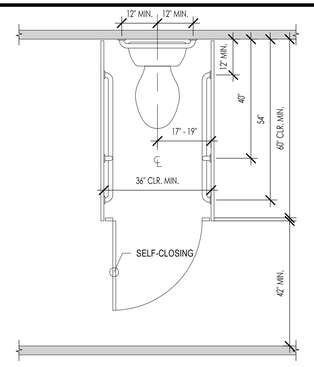

SECTION 604.10

AMBULATORY ACCESSIBLE STALL
1/2" = 1'-0"
B G104

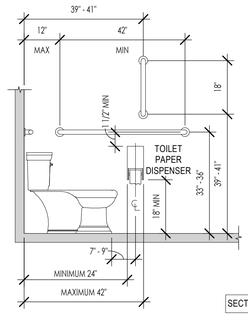

SECTION 603 & 604.9

ACCESSIBLE STALLS
1/2" = 1'-0"
E G104

bhd ARCHITECTS
www.bhdarchitects.com
Phone 801.571.0010
Fax 801.571.0303
Toll Free 888.571.0010
65 East Wadsworth Park Drive
Suite 205 Draper, Utah 84020

LICENSED ARCHITECT
Lafe Theadore Harris
15 Aug 2024
#7878-0301
STATE OF UTAH

THE CHURCH OF
JESUS CHRIST
OF LATTER-DAY SAINTS

Springwater 9
Vineyard UT Springwater Stake

Approx. 542 South Geneva Road
Vineyard, Utah 84059

Date: 15 Aug 2024
BHD #: 2346
County Parcel: 39-228:0001
Plan Series: G300-MH-11
Owner #: 502-2004

Drawing Issue and Revision Schedule

#	Date	Description

ACCESSIBILITY - PUBLIC SPACES

G104

8/15/2024 1:05:39 PM

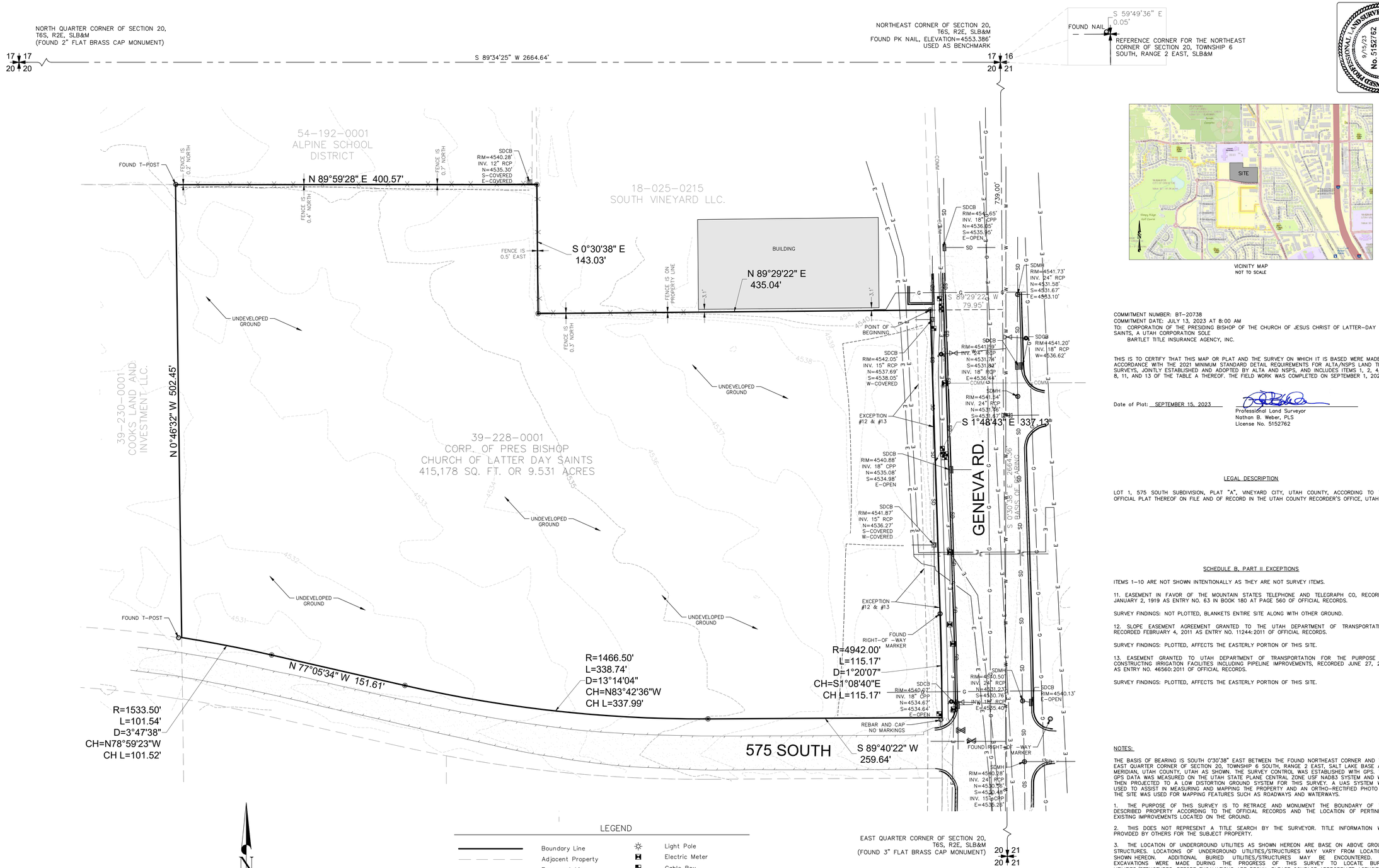

VICINITY MAP
NOT TO SCALE

COMMITMENT NUMBER: BT-20738
COMMITMENT DATE: JULY 13, 2023 AT 8:00 AM
TO: CORPORATION OF THE PRESIDING BISHOP OF THE CHURCH OF JESUS CHRIST OF LATTER-DAY SAINTS, A UTAH CORPORATION SOLE
BARTLET TITLE INSURANCE AGENCY, INC.

THIS IS TO CERTIFY THAT THIS MAP OR PLAT AND THE SURVEY ON WHICH IT IS BASED WERE MADE IN ACCORDANCE WITH THE 2021 MINIMUM STANDARD DETAIL REQUIREMENTS FOR ALTA/NSPS LAND TITLE SURVEYS, JOINTLY ESTABLISHED AND ADOPTED BY ALTA AND NSPS, AND INCLUDES ITEMS 1, 2, 4, 5, 8, 11, AND 13 OF THE TABLE A THEREOF. THE FIELD WORK WAS COMPLETED ON SEPTEMBER 1, 2023.

Date of Plat: SEPTEMBER 15, 2023

Professional Land Surveyor
Nathan B. Weber, PLS
License No. 5152762

LEGAL DESCRIPTION

LOT 1, 575 SOUTH SUBDIVISION, PLAT "A", VINEYARD CITY, UTAH COUNTY, ACCORDING TO THE OFFICIAL PLAT THEREOF ON FILE AND OF RECORD IN THE UTAH COUNTY RECORDER'S OFFICE, UTAH.

SCHEDULE B, PART II EXCEPTIONS

ITEMS 1-10 ARE NOT SHOWN INTENTIONALLY AS THEY ARE NOT SURVEY ITEMS.

11. EASEMENT IN FAVOR OF THE MOUNTAIN STATES TELEPHONE AND TELEGRAPH CO, RECORDED JANUARY 2, 1919 AS ENTRY NO. 63 IN BOOK 180 AT PAGE 560 OF OFFICIAL RECORDS.

SURVEY FINDINGS: NOT PLOTTED, BLANKETS ENTIRE SITE ALONG WITH OTHER GROUND.

12. SLOPE EASEMENT AGREEMENT GRANTED TO THE UTAH DEPARTMENT OF TRANSPORTATION, RECORDED FEBRUARY 4, 2011 AS ENTRY NO. 11244:2011 OF OFFICIAL RECORDS.

SURVEY FINDINGS: PLOTTED, AFFECTS THE EASTERLY PORTION OF THIS SITE.

13. EASEMENT GRANTED TO UTAH DEPARTMENT OF TRANSPORTATION FOR THE PURPOSE OF CONSTRUCTING IRRIGATION FACILITIES INCLUDING PIPELINE IMPROVEMENTS, RECORDED JUNE 27, 2011 AS ENTRY NO. 46560:2011 OF OFFICIAL RECORDS.

SURVEY FINDINGS: PLOTTED, AFFECTS THE EASTERLY PORTION OF THIS SITE.

NOTES:

THE BASIS OF BEARING IS SOUTH 0°30'38" EAST BETWEEN THE FOUND NORTHEAST CORNER AND THE EAST QUARTER CORNER OF SECTION 20, TOWNSHIP 6 SOUTH, RANGE 2 EAST, SALT LAKE BASE AND MERIDIAN, UTAH COUNTY, UTAH AS SHOWN. THE SURVEY CONTROL WAS ESTABLISHED WITH GPS. THE GPS DATA WAS MEASURED ON THE UTAH STATE PLANE CENTRAL ZONE USF NAD83 SYSTEM AND WAS THEN PROJECTED TO A LOW DISTORTION GROUND SYSTEM FOR THIS SURVEY. A UAS SYSTEM WAS USED TO ASSIST IN MEASURING AND MAPPING THE PROPERTY AND AN ORTHO-RECTIFIED PHOTO OF THE SITE WAS USED FOR MAPPING FEATURES SUCH AS ROADWAYS AND WATERWAYS.

1. THE PURPOSE OF THIS SURVEY IS TO RETRACE AND MONUMENT THE BOUNDARY OF THE DESCRIBED PROPERTY ACCORDING TO THE OFFICIAL RECORDS AND THE LOCATION OF PERTINENT EXISTING IMPROVEMENTS LOCATED ON THE GROUND.

2. THIS DOES NOT REPRESENT A TITLE SEARCH BY THE SURVEYOR. TITLE INFORMATION WAS PROVIDED BY OTHERS FOR THE SUBJECT PROPERTY.

3. THE LOCATION OF UNDERGROUND UTILITIES AS SHOWN HEREON ARE BASE ON ABOVE GROUND STRUCTURES. LOCATIONS OF UNDERGROUND UTILITIES/STRUCTURES MAY VARY FROM LOCATIONS SHOWN HEREON. ADDITIONAL BURIED UTILITIES/STRUCTURES MAY BE ENCOUNTERED. NO EXCAVATIONS WERE MADE DURING THE PROGRESS OF THIS SURVEY TO LOCATE BURIED UTILITIES/STRUCTURES. BEFORE EXCAVATIONS ARE BEGUN, PLEASE CONTACT APPROPRIATE AGENCIES.

4. THE PURPORTED ADDRESS FOR THIS SITE IS 750 EAST 575 SOUTH, VINEYARD, UTAH 84057 BASED ON DOCUMENTATION PROVIDED AT THE TIME OF THE SURVEY.

LEGEND

Boundary Line	Light Pole
Adjacent Property	Electric Meter
Easement Line	Cable Box
Tie Line	Water Valve
Section Line	Fire Hydrant
Fence Line	Storm Inlet (Square)
Edge Of Asphalt	Catch Basin
Gas Line	Storm Drain Manhole
Storm Drain Line	Property Corner
Water Line	Found Property Corner
Asphalt	Section Corner Monument
Building	

GRAPHIC SCALE
50 0 25 50 100
1" (INCH) = 50 ' (FEET)

DIAMOND LAND SURVEYING
6891 South 700 West Ste. 150
Midvale, Utah 84047
Phone (801) 266-5099 Fax (801) 266-5032
office@diamondlandsurveying.com
www.diamondlandsurveying.com

Boundary Surveys
Topography Surveys
Subdivisions
Construction Staking
A.L.T.A. & A.C.S.M. Surveys

LOCATED IN THE NORTHEAST QUARTER OF SECTION 20, TOWNSHIP 6 SOUTH, RANGE 2 EAST, SALT LAKE BASE AND MERIDIAN

bhd ARCHITECTS
www.bhdarchitects.com
Phone 801.571.0010
Fax 801.571.0303
Toll Free 888.571.0010
65 East Wadsworth Park Drive
Suite 205 Draper, Utah 84020

THE CHURCH OF JESUS CHRIST OF LATTER-DAY SAINTS

Springwater 9
Vineyard UT Springwater Stake
Approx. 540 South Geneva Road
Vineyard, Utah 84059

Owner #: 502-2004
Plan Series: G300-MH-11
County Parcel: 39-228:0001
BHD #: 2346
Date: 15 Aug 2024

Drawing Issue and Revision Schedule

#	Date	Description
1	15 Aug 2024	Bid Documents

Site Survey

C101

Printed: 12 Aug 2024 12:39 PM

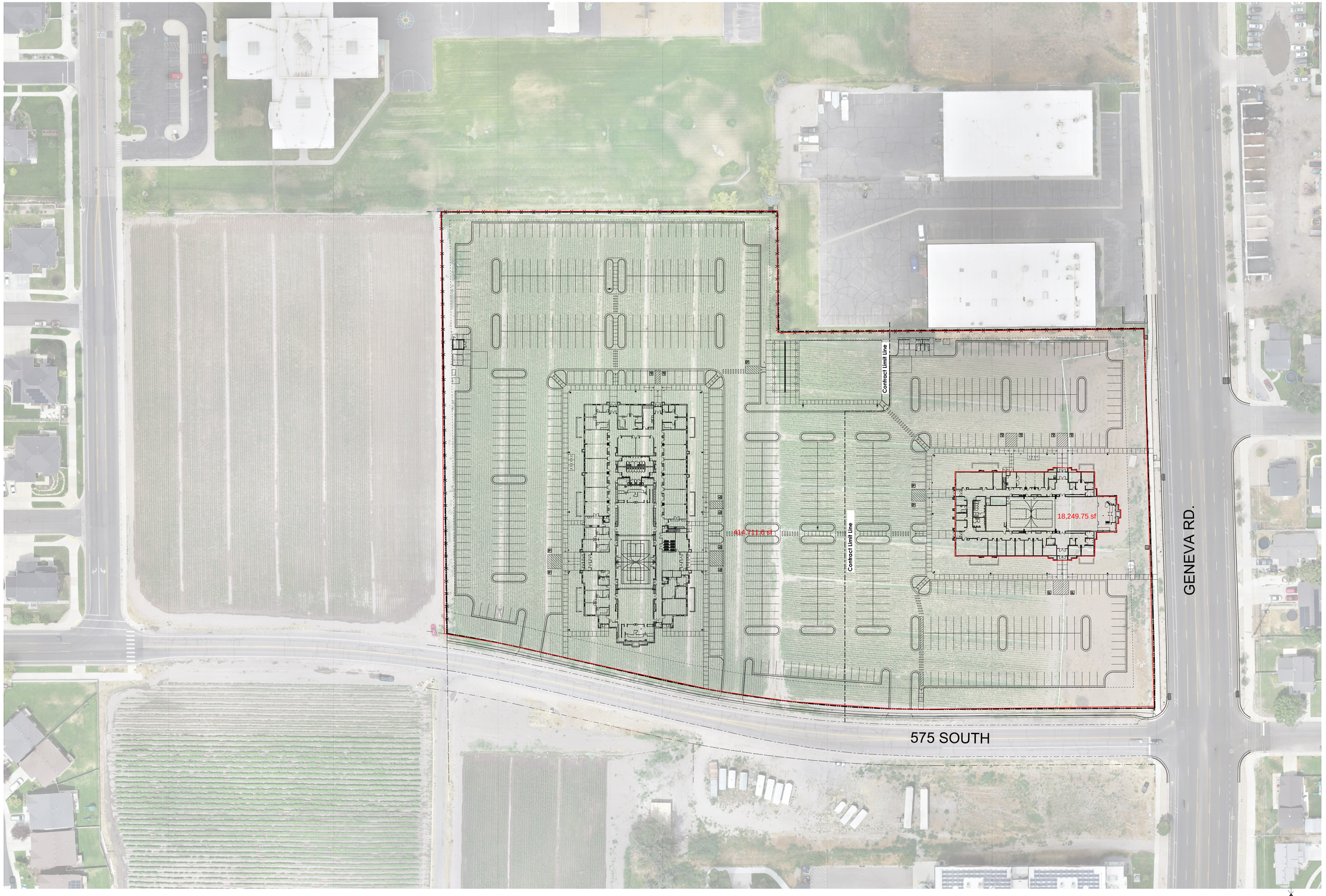

1 Site Existing Conditions Plan

Scale: 1" = 50'-0"

Photo taken 10 Aug 2024

Click here for drone data

0' 25' 50' 100' 99'-8 3/4" 200'

W E S

Printed: 12 Aug 2024 8:51 PM

bhd ARCHITECTS

www.bhdarchitects.com

Phone 801.571.0010
Fax 801.571.0303
Toll Free 888.571.0010

65 East Wadsworth Park Drive
Suite 205 Draper, Utah 84020

LICENSED ARCHITECT
Late
Theodore
Sams
15 Aug 2024
6928878-0301
STATE OF UTAH

THE CHURCH OF JESUS CHRIST OF LATTER-DAY SAINTS

Springwater 9
Vineyard UT Springwater Stake

Approx. 542 South Geneva Road
Vineyard, Utah 84059

BHD #: 2346
County Parcel: 39-228-0001
Plan Series: G-300-MH-11
Owner #: 502-2004
Date: 15 Aug 2024

Drawing Issue and Revision Schedule

#	Date	Description
1	15 Aug 2024	Bid Documents

Site Existing Conditions Plan

C102

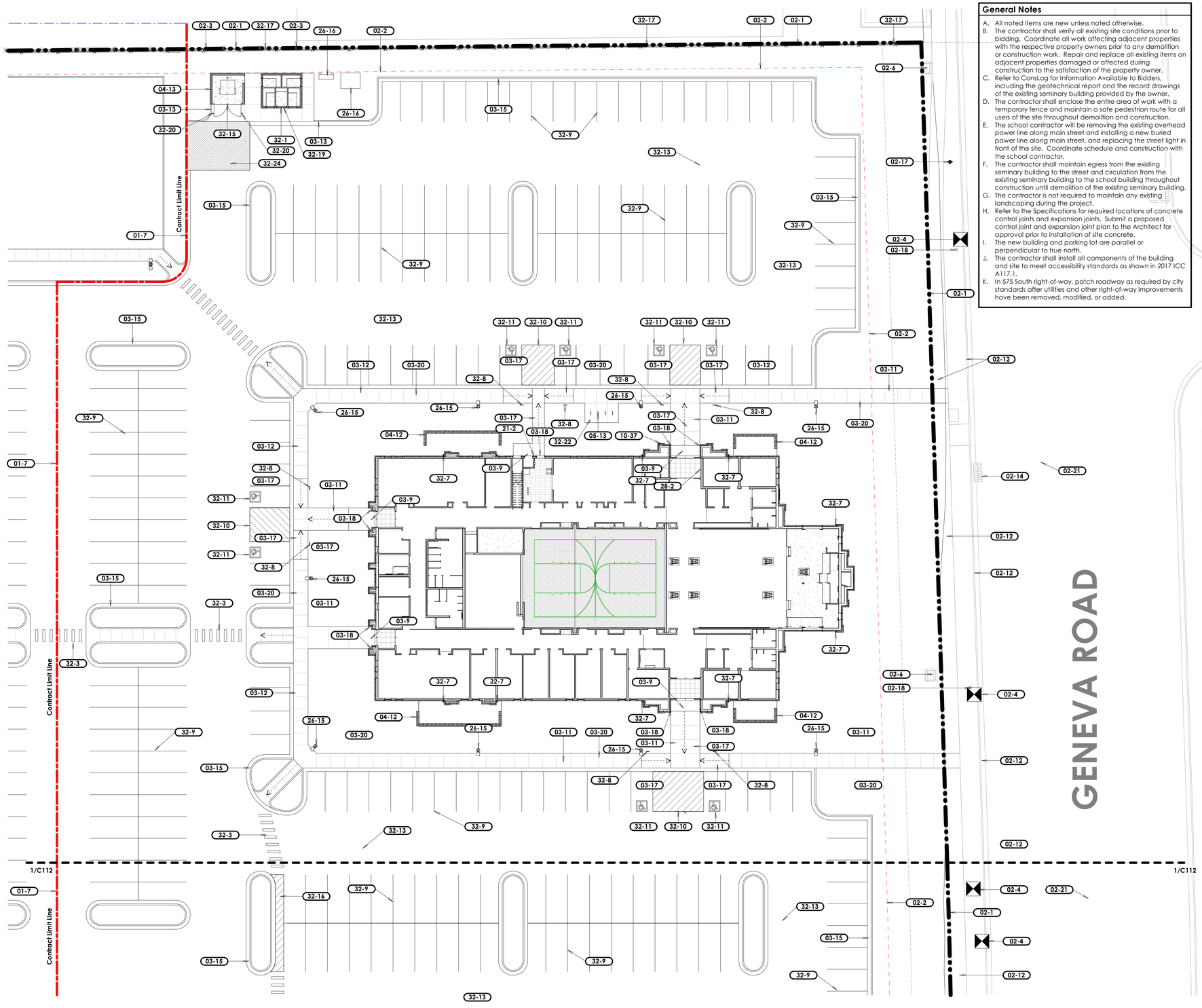

1 Site Plan - North

Scale: 1" = 20'-0"

0' 10' 20' 40' 80'

W S N E

General Notes

A. All noted items are new unless noted otherwise.
B. The contractor shall verify all existing site conditions prior to bidding. Coordinate all work affecting adjacent properties with the respective property owners prior to any demolition or construction work. Repair and replace all existing items on adjacent properties damaged or affected during construction to the satisfaction of the property owner.
C. Refer to ConsLog for Information Available to Bidders, including the geotechnical report and the record drawings of the existing seminary building provided by the owner.
D. The contractor shall enclose the entire area of work with a temporary fence and maintain a safe pedestrian route for all users of the site throughout demolition and construction.
E. The school contractor will be removing the existing overhead power line along main street and installing a new buried power line along main street, and replacing the street light in front of the site. Coordinate schedule and construction with the school contractor.
F. The contractor shall maintain egress from the existing seminary building to the street and circulation from the existing seminary building to the school building throughout construction until demolition of the existing seminary building.
G. The contractor is not required to maintain any existing landscaping during the project.
H. Refer to the Specifications for required locations of concrete control joints and expansion joints. Submit a proposed control joint and expansion joint plan to the Architect for approval prior to installation of site concrete.
I. The new building and parking lot are parallel or perpendicular to true north.
J. The contractor shall install all components of the building and site to meet accessibility standards as shown in 2017 ICC A117.1.
K. In 575 South right-of-way, patch roadway as required by city standards after utilities and other right-of-way improvements have been removed, modified, or added.

Overexcavation and Fill Notes

A. For Overexcavation and Fill Detail, see F/C503.
B. Remove all unconsolidated fill and deleterious materials from the entire site prior to construction. Remove and stockpile topsoil as necessary for landscaped areas. For depth and locations of topsoil, see the Landscape Sheets and Specification Sections.
C. In the area of the building and mechanical enclosures:
   a. Overexcavate the entire footprint and 60" beyond at a 1:1 slope to the elevation as noted on F/C503.
   b. Install imported structural fill up to the bottom of footing level.
   c. Install imported structural fill up to the base course under the building slab.
D. At the storage building:
   a. Excavate the entire footprint of the storage building to an elevation 1 foot below the bottom of footings.
   b. Install imported structural fill up to the bottom of footing level.
   c. Install structural fill up to the base course under the storage building slab.
E. At the dumpster enclosure:
   a. Excavate the entire footprint of the dumpster enclosure to an elevation 1 foot below the bottom of footings.
   b. Install imported structural fill up to the bottom of footing level.
   c. Install structural fill to raise the grade to the base course under the dumpster slab and pad. See the Site Details for base course and concrete slab thickness.
F. At a 20 foot x 15 foot area in front of the dumpster [as shown on the Site Architectural Plans], install (2) 3" layers of asphalt with a 14" minimum base.
G. Install 8" crushed rock base beneath sidewalks at building entries, full width of sidewalk and full length of sidewalk from the building to the perimeter sidewalk.
H. All crushed rock base shall be 3/4" and shall be compacted by procedural compaction.
I. At sidewalks and all site concrete pads and elements:
   a. Overexcavate as noted in Item B. above.
   b. Install subbase up to the base level.
   c. Install 4" aggregate base below all site concrete elements, pads, and sidewalks. See site details.
J. At asphalt paving:
   a. Overexcavate as noted in Item B. above.
   b. Install subbase up to the base level.
   c. Install 3" asphalt paving over 9" base over entire parking lot (excluding the area in front of the dumpster enclosure).
K. All structural fill shall be imported.
L. Install imported structural fill full depth at all utility trenches.
M. Onsite topsoil shall be utilized in landscaped areas, with amendments as required by the Landscape Sheets and Specification Sections. Topsoil in landscaped areas which do not require grading may have the topsoil left in place.
N. All compacted soils shall be density tested.
O. On-site native soils may be used as fill only in landscape areas.

Site Data

	Square Feet	% of Site
Main building	17,324 SF	10.9%
Storage building	244 SF	0.2%
Asphalt Pavement	84,472 SF	53.2%
Concrete	13,658 SF	8.6%
Turfgrass	0 SF	0.0%
Other landscaping	43,059 SF	27.1%
Total site	**158,757 SF**	**3.64 acres**

Keyed Notes

01-7 Contract limit line. All work shown on the other side of the contract limit line is not in this project's scope of work and is shown for reference only. Coordinate all work at the contract limit line with the other project's contractors. Refer to the other site sheets for specific requirements for items that extend past the contract limit line.
02-1 Existing property line. See survey.
02-2 Existing utility easement. See survey and site utility plan.
02-3 Remove existing perimeter fence in preparation for new perimeter fence. See Site Architectural Plan. Coordinate with adjacent paving, fences which tie into this fence, etc. Repair adjacent items to remain as necessary to tie iinto new fence and mow strip.
02-4 Existing utility equipment to remain.
02-6 Existing irrigation box to remain.
02-12 Existing sidewalk, curb and gutter to remain.
02-14 Existing storm drain catch basin or structure to remain.
02-17 Existing fire hydrant to remain.
02-18 Existing light pole to remain.
02-21 Existing street paving to remain. See site survey.
03-9 Building landing. 2% slope maximum.
03-11 New concrete sidewalk. See A & H/C501. Typical.
03-12 New integral sidewalk, curb, and gutter. See B/C501. See Grading and Drainage Plan for infall / outfall of gutter.
03-13 Transition height of curb from full height to even with sidewalk and gutter in 5'-0". See E/C501.
03-15 New concrete curb & gutter - typical. See typical details C501 & infall / outfall notation on the Grading & Drainage Site Plans.
03-17 Sloped section of concrete sidewalk at <5% slope. See grading plan for exact slope.
03-18 Align sidewalk with building foundation wall.
03-20 New control joint in concrete flatwork. See H/C501.
04-12 Mechanical enclosure wall. See C and D/C504 and Structural Sheets.
04-13 Dumpster enclosure wall. See 1/C503 and Structural Sheets.
05-13 New stainless steel bike rack. See L/C501.
10-37 New knox box 3200 series recessed in brick (verify type and location with fire department).
21-2 Fire department connection with locking knox plugs. Coordinate model with Fire Department requirements.
26-15 New pole light and concrete base. See D/C503 and electrical sheets.
26-16 New concrete transformer pad and CT can per power company requirements. See Electrical Sheets.
28-2 Fire alarm control panel location. See A101 and electrical sheets.
32-1 New irrigation controller. See landscape sheets.
32-3 New painted crosswalk.
32-7 New roof drain box at downspout. See utility sheets and C/C502. Typical.
32-8 New accessible parking sign. See A/C502.
32-9 New painted parking lines. Parking lines shall be 4" wide reflective white paint centered on top. Typical.
32-10 New accessible parking access aisle. Paint lines shall be 4" wide reflective white, at a 45Â° angle, and have 2'-0" spacing.
32-11 New blue & white painted accessible parking symbol.
32-13 New asphalt paving - typical. See F/C501 and overexcavation and fill notes.
32-15 6'-0" tall steel dumpster gates. See 1/C503.
32-16 Painted out "no parking" area. Paint lines shall be 4" wide reflective white, at a 45Â° angle, and have 2'-0" spacing.
32-17 New 6'-0" vinyl privacy fence with 12" x 12" mow strip. See E/C503.
32-19 New storage building. See C801.
32-20 New bollard. See B/C502.
32-22 Coordinate bike rack pad, bike rack post foundations, and location of sewer cleanout to avoid conflicts. See the Utility Plan.
32-24 (2) 3" layers of asphalt over 14" aggregate base in shaded area.

bhd ARCHITECTS
www.bhdarchitects.com
Phone 801.571.0010
Fax 801.571.0303
Toll Free 888.571.0010
65 East Wadsworth Park Drive
Suite 205 Draper, Utah 84020

LICENSED ARCHITECT Lee Theodore Harris 15 Aug 2024 6736878-0301 STATE OF UTAH

THE CHURCH OF JESUS CHRIST OF LATTER-DAY SAINTS

Springwater 9
Vineyard UT Springwater Stake

Approx. 542 South Geneva Road
Vineyard, Utah 84059

BHD #: 2346
County Parcel: 39-228:0001
Plan Series: G300-MH-11
Owner #: 502-2004
Date: 15 Aug 2024

Drawing Issue and Revision Schedule

#	Date	Description
1	15 Aug 2024	Bid Documents

Site Plan - North

C111

Printed 8/15/2024 1:34:07 PM

General Notes

A. All noted items are new unless noted otherwise.
B. The contractor shall verify all existing site conditions prior to bidding. Coordinate all work affecting adjacent properties with the respective property owners prior to any demolition or construction work. Repair and replace all existing items on adjacent properties damaged or affected during construction to the satisfaction of the property owner.
C. Refer to ConsLog for Information Available to Bidders, including the geotechnical report and the record drawings of the existing seminary building provided by the owner.
D. The contractor shall enclose the entire area of work with a temporary fence and maintain a safe pedestrian route for all users of the site throughout demolition and construction.
E. The school contractor will be removing the existing overhead power line along main street and installing a new buried power line along main street, and replacing the street light in front of the site. Coordinate schedule and construction with the school contractor.
F. The contractor shall maintain egress from the existing seminary building to the street and circulation from the existing seminary building to the school building throughout construction until demolition of the existing seminary building.
G. The contractor is not required to maintain any existing landscaping during the project.
H. Refer to the Specifications for required locations of concrete control joints and expansion joints. Submit a proposed control joint and expansion joint plan to the Architect for approval prior to installation of site concrete.
I. The new building and parking lot are parallel or perpendicular to true north.
J. The contractor shall install all components of the building and site to meet accessibility standards as shown in 2017 ICC A117.1.
K. In 575 South right-of-way, patch roadway as required by city standards after utilities and other right-of-way improvements have been removed, modified, or added.

Overexcavation and Fill Notes

A. For Overexcavation and Fill Detail, see F/C503.
B. Remove all unconsolidated fill and deleterious materials from the entire site prior to construction. Remove and stockpile topsoil as necessary for landscaped areas. For depth and locations of topsoil, see the Landscape Sheets and Specification Sections.
C. In the area of the building and mechanical enclosures:
   a. Overexcavate the entire footprint and 60' beyond at a 1:1 slope to the elevation as noted on F/C503.
   b. Install imported structural fill up to the bottom of footing level.
   c. Install imported structural fill up to the base course under the building slab.
D. At the storage building:
   a. Excavate the entire footprint of the storage building to an elevation 1 foot below the bottom of footings.
   b. Install imported structural fill up to the bottom of footing level.
   c. Install structural fill up to the base course under the storage building slab.
E. At the dumpster enclosure:
   a. Excavate the entire footprint of the dumpster enclosure to an elevation 1 foot below the bottom of footings.
   b. Install imported structural fill up to the bottom of footing level.
   c. Install structural fill to raise the grade to the base course under the dumpster slab and pad. See the Site Details for base course and concrete slab thickness.
F. At a 20 foot x 15 foot area in front of the dumpster [as shown on the Site Architectural Plans], install (2) 3" layers of asphalt with a 14" minimum base.
G. Install 8" crushed rock base beneath sidewalks at building entries, full width of sidewalk and full length of sidewalk from the building to the perimeter sidewalk.
H. All crushed rock base shall be 3/4" and shall be compacted by procedural compaction.
I. At sidewalks and all site concrete pads and elements:
   a. Overexcavate as noted in Item B. above.
   b. Install subbase up to the base level.
   c. Install 4" aggregate base below all site concrete elements, pads, and sidewalks. See site details.
J. At asphalt paving:
   a. Overexcavate as noted in Item B. above.
   b. Install subbase up to the base level.
   c. Install 5" asphalt paving over 9" base over entire parking lot (excluding the area in front of the dumpster enclosure).
K. All structural fill shall be imported.
L. Install imported structural fill full depth at all utility trenches.
M. Onsite topsoil shall be utilized in landscaped areas, with amendments as required by the Landscape Sheets and Specification Sections. Topsoil in landscaped areas which do not require grading may have the topsoil left in place.
N. All compacted soils shall be density tested.
O. On-site native soils may be used as fill only in landscape areas.

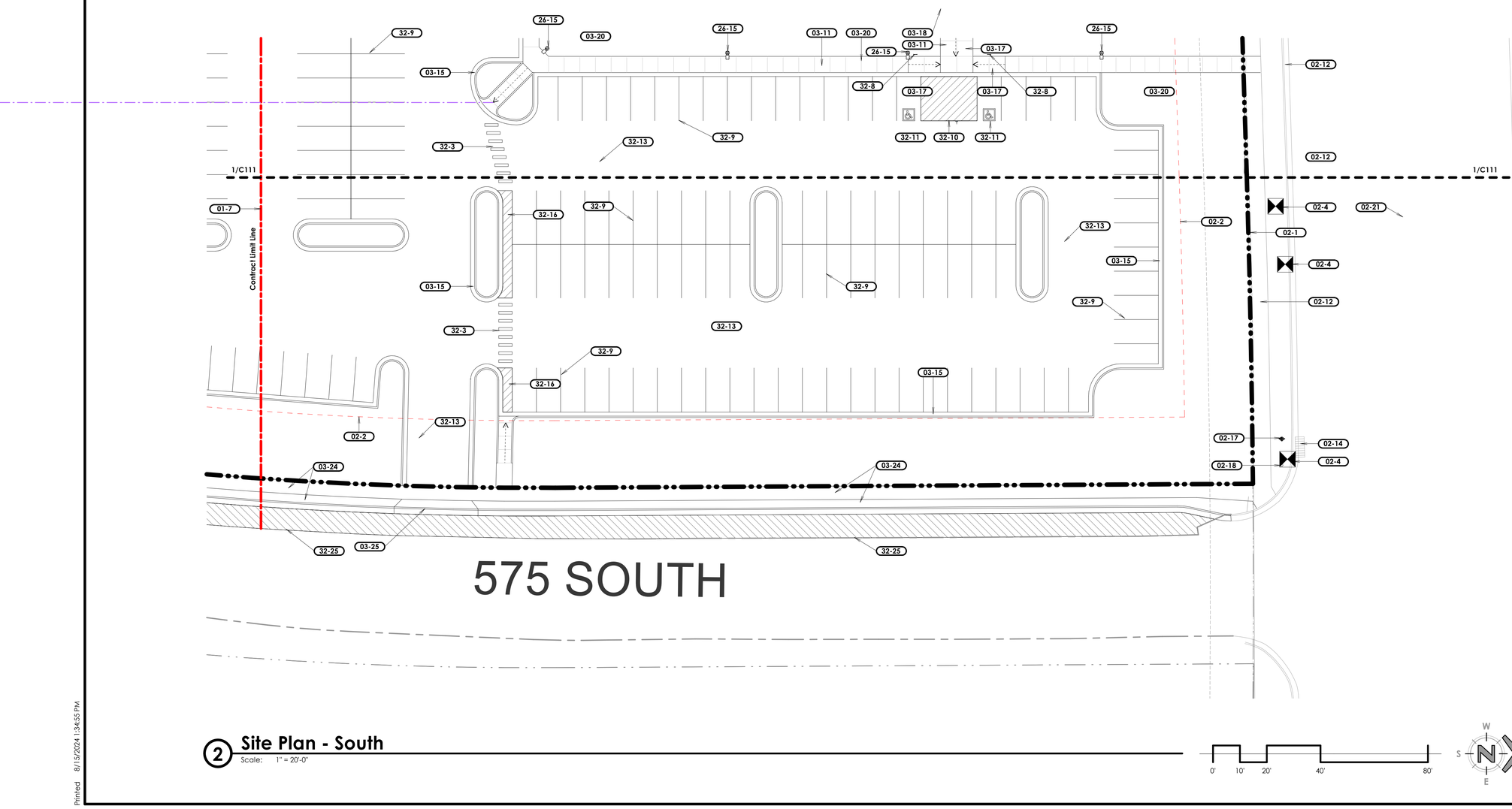

2 Site Plan - South

Scale: 1" = 20'-0"

Site Data

	Square Feet	% of Site
Main building	17,324 SF	10.9%
Storage buiding	244 SF	0.2%
Asphalt Pavement	84,472 SF	53.2%
Concrete	13,658 SF	8.6%
Turfgrass	0 SF	0.0%
Other landscaping	43,059 SF	27.1%
Total site	**158,757 SF**	**3.64 acres**

Keyed Notes

01-7 Contract limit line. All work shown on the other side of the contract limit line is not in this projectâ€™s scope of work and is shown for reference only. Coordinate all work at the contract limit line with the other projectâ€™s contractors. Refer to the other site sheets for specific requirements for items that extend past the contract limit line.
02-1 Existing property line. See survey.
02-2 Existing utility easement. See survey and site utility plan.
02-4 Existing utility equipment to remain.
02-12 Existing sidewalk, curb and gutter to remain.
02-14 Existing storm drain catch basin or structure to remain.
02-17 Existing fire hydrant to remain.
02-18 Existing light pole to remain.
02-21 Existing street paving to remain. See site survey.
03-11 New concrete sidewalk. See A & H/C501. Typical.
03-15 New concrete curb & gutter - typical. See typical details C501 & infall / outfall notation on the Grading & Drainage Site Plans.
03-17 Sloped section of concrete sidewalk at <5% slope. See grading plan for exact slope.
03-18 Align sidewalk with building foundation wall.
03-20 New control joint in concrete flatwork. See H/C501.
03-24 Concrete curb, gutter, and sidewalk, and base, per city standards.
03-25 Concrete drive approach and base pre city standards.
26-15 New pole light and concrete base. See D/C503 and electrical sheets.
32-3 New painted crosswalk.
32-8 New accessible parking sign. See A/C502.
32-9 New painted parking lines. Parking lines shall be 4" wide reflective white paint centered on top. Typical.
32-10 New accessible parking access aisle. Paint lines shall be 4" wide reflective white, at a 45Â° angle, and have 2'-0" spacing.
32-11 New blue & white painted accessible parking symbol.
32-13 New asphalt paving - typical. See F/C501 and overexcavation and fill notes.
32-16 Painted out "no parking" area. Paint lines shall be 4" wide reflective white, at a 45Â° angle, and have 2'-0" spacing.
32-25 New asphalt paving, striping, road base, and subgrade preparation per city standards. Sawcut and remove edge of existing asphalt paving per city standards.

bhd ARCHITECTS
www.bhdarchitects.com
Phone 801.571.0010
Fax 801.571.0303
Toll Free 888.571.0010
65 East Wadsworth Park Drive
Suite 205 Draper, Utah 84020

LICENSED ARCHITECT Late Theodore Lamp 6728878-0301 STATE OF UTAH

THE CHURCH OF JESUS CHRIST OF LATTER-DAY SAINTS

Springwater 9
Vineyard UT Springwater Stake
Approx. 542 South Geneva Road
Vineyard, Utah 84059

Owner #: 502-2004
Plan Series: C500-MH-11
County Parcel: 59:228:0001
BHD #: 2246
Date: 15 Aug 2024

Drawing Issue and Revision Schedule

#	Date	Description
1	15 Aug 2024	Bid Documents

Site Plan - South

C112

Printed 8/15/2024 1:34:55 PM

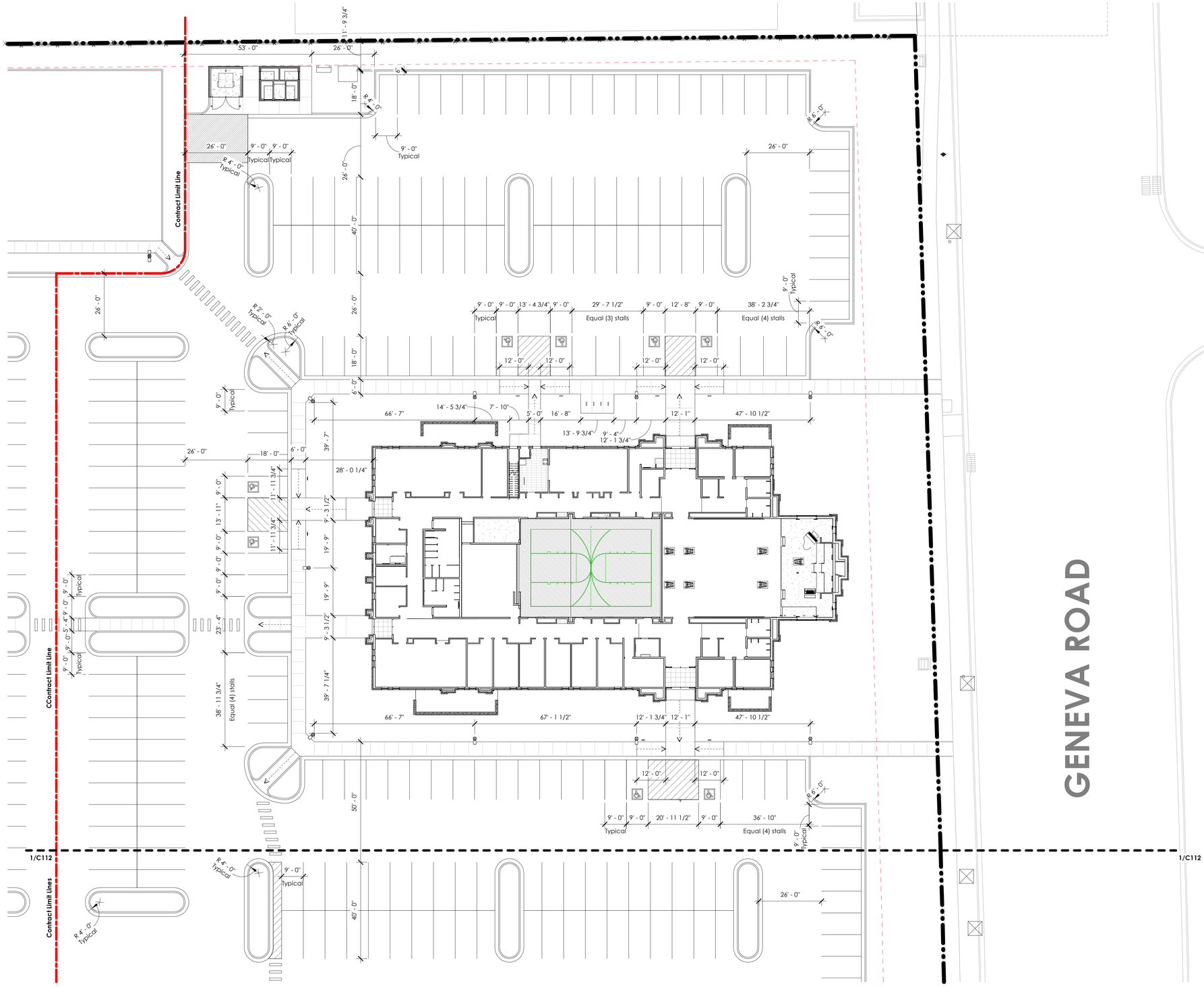

1 Site Plan - North

Scale: 1" = 20'-0"

bhd ARCHITECTS
www.bhdarchitects.com
Phone 801.571.0010
Fax 801.571.0303
Toll Free 888.571.0010
65 East Wadsworth Park Drive
Suite 205 Draper, Utah 84020

LICENSED ARCHITECT
Late
Theodore
Jaggi
6728878-0301
STATE OF UTAH

THE CHURCH OF
JESUS CHRIST
OF LATTER-DAY SAINTS

Springwater 9
Vineyard UT Springwater Stake

Approx. 542 South Geneva Road
Vineyard, Utah 84059

Date:	15 Aug 2024
BHD #:	2346
County Parcel:	39-228-0001
Plan Series:	G300-MH-11
Owner #:	502-2004

Drawing Issue and Revision Schedule

#	Date	Description
1	15 Aug 2024	Bid Documents

Site Dimension Plan - North

C113

Printed 8/15/2024 1:35:26 PM

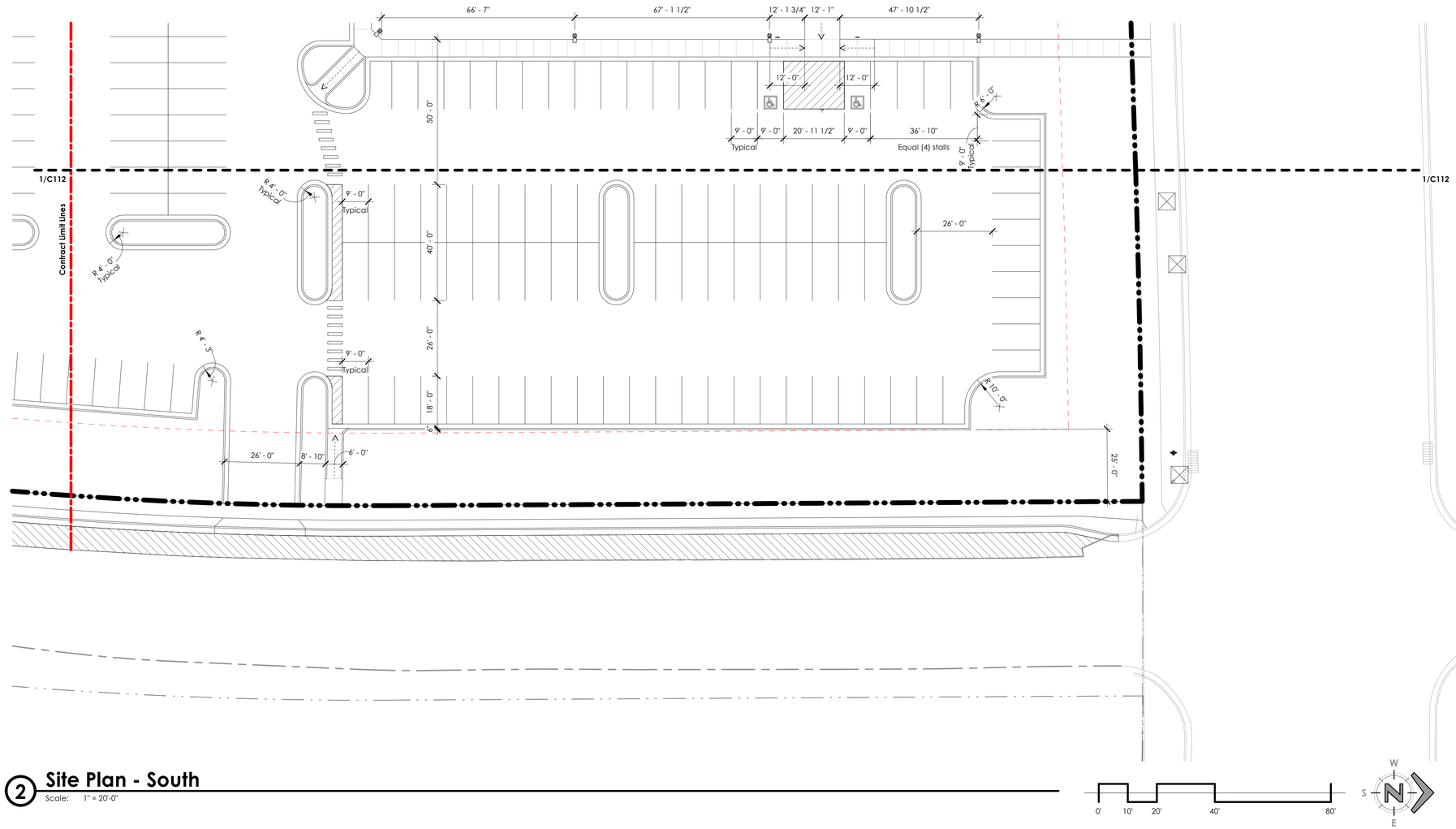

2 Site Plan - South

Scale: 1" = 20'-0"

bhd ARCHITECTS
www.bhdarchitects.com
Phone 801.571.0010
Fax 801.571.0303
Toll Free 888.571.0010
65 East Wadsworth Park Drive
Suite 205 Draper, Utah 84020

LICENSED ARCHITECT
Late
Theodore
Capp
6736878-0301
STATE OF UTAH

THE CHURCH OF
JESUS CHRIST
OF LATTER-DAY SAINTS

Springwater 9
Vineyard UT Springwater Stake

Approx. 542 South Geneva Road
Vineyard, Utah 84059

Drawing Issue and Revision Schedule

#	Date	Description
1	15 Aug 2024	Bid Documents

Site Dimension Plan - South

C114

BHD #: 2346
County Parcel: 39-228-0001
Plan Series: G300-MH-11
Owner #: 502-2004
Date: 15 Aug 2024

Printed 8/15/2024 1:35:51 PM

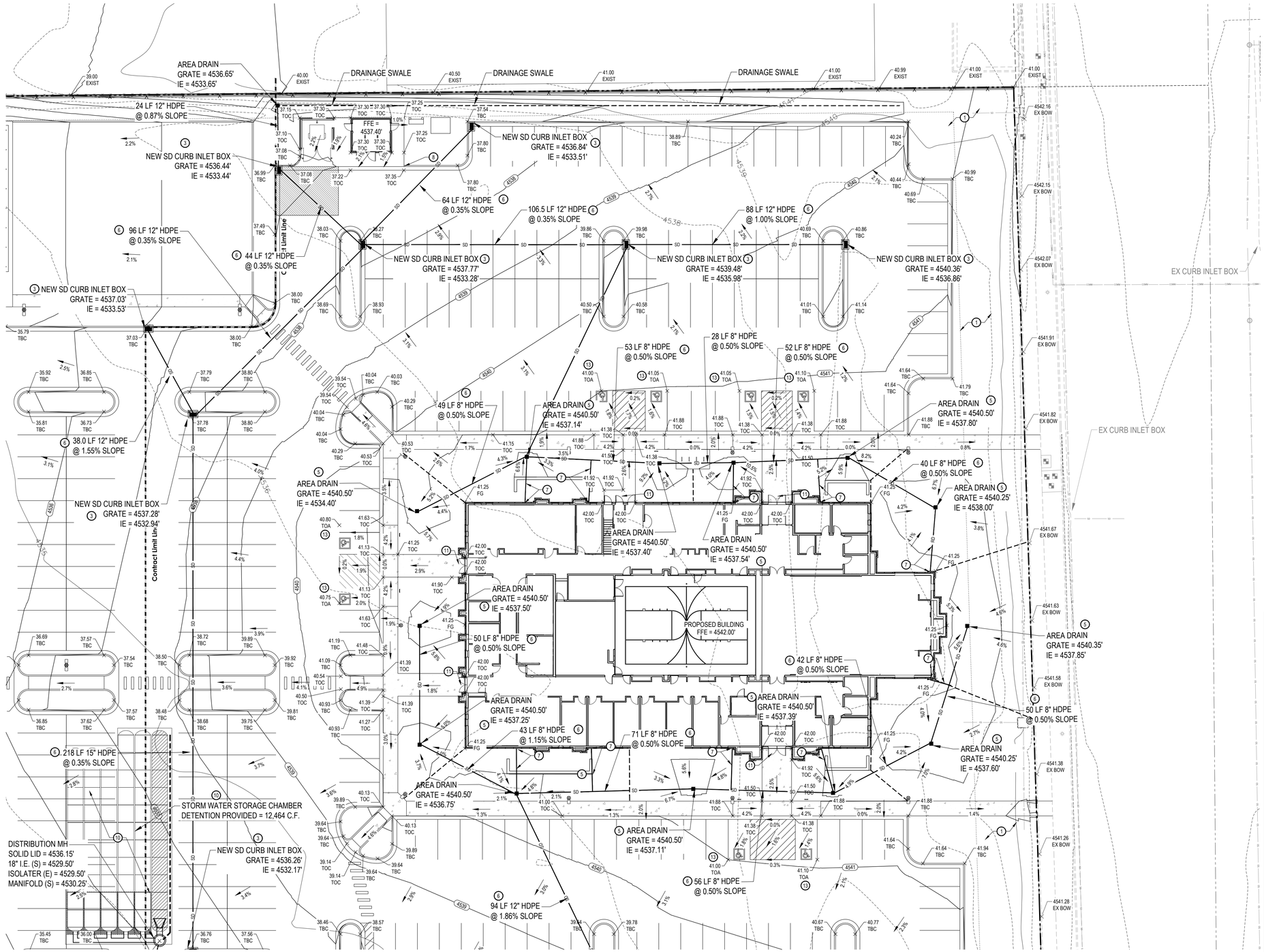

NORTH

SCALE: 1" = 20'

0 10' 20' 40' 60'

GENERAL NOTES:

SITE GRADING SHALL BE PERFORMED IN ACCORDANCE WITH THESE PLANS AND SPECIFICATIONS. THE CONTRACTOR SHALL BE RESPONSIBLE FOR REMOVING AND REPLACING ALL SOFT, YIELDING OR UNSUITABLE MATERIALS AND REPLACING WITH SUITABLE MATERIALS. CONTRACTOR SHALL SUBMIT A COMPACTION REPORT PREPARED BY A QUALIFIED REGISTERED SOILS ENGINEER, VERIFYING THAT ALL FILLED AREAS AND SUBGRADE AREAS WITHIN THE BUILDING PAD AREA AND AREAS TO BE PAVED, HAVE BEEN COMPACTED IN ACCORDANCE WITH THESE PLANS & SPECS.

THE CONTRACTOR IS TO USE BEST MANAGEMENT PRACTICES FOR PROVIDING EROSION CONTROL FOR CONSTRUCTION OF THIS PROJECT. SPECIFIC DETAILS SHOWN ON SHEET C171 SHALL BE USED IN COMBINATION WITH OTHER ACCEPTED LOCAL PRACTICES.

EXISTING UNDERGROUND UTILITIES AND IMPROVEMENTS ARE SHOWN IN THEIR APPROXIMATE LOCATIONS BASED UPON RECORD INFORMATION AVAILABLE AT THE TIME OF PREPARATION OF PLANS. LOCATIONS MAY NOT HAVE BEEN VERIFIED IN THE FIELD AND NO GUARANTEE IS MADE AS TO ACCURACY OR COMPLETENESS OF THE INFORMATION SHOWN. IT SHALL BE RESPONSIBILITY OF THE CONTRACTOR TO DETERMINE THE EXISTENCE AND LOCATION OF THOSE UTILITIES SHOWN ON THESE PLANS OR INDICATED IN THE FIELD BY LOCATING SERVICES. ANY ADDITIONAL COSTS INCURRED AS A RESULT OF CONTRACTOR'S FAILURE TO VERIFY LOCATIONS OF EXISTING UTILITIES PRIOR TO BEGINNING OF CONSTRUCTION IN THEIR VICINITY SHALL BE BORNE BY THE CONTRACTOR AND ASSUMED INCLUDED IN THE CONTRACT.

REFER TO OVER EXCAVATION AND FILL NOTES ON SHEET C111.

KEYED NOTES:

PROVIDE, INSTALL AND/OR CONSTRUCT THE FOLLOWING PER THE SPECIFICATIONS GIVEN OR REFERENCED AND THE DETAILS NOTED AND AS SHOWN ON THE CONSTRUCTION DRAWINGS:

1. GRADE SITE TO ELEVATIONS AND CONTOURS SHOWN ON PLAN.
2. 3' x 3' STORM DRAIN CATCH BASIN WITH HEAVY DUTY BICYCLE SAFE GRATE, PER STANDARD CHURCH DETAIL, SEE DETAIL 'H', SHEET C521.
3. STORM DRAIN CURB INLET WITH HEAVY DUTY BICYCLE SAFE GRATE, PER STANDARD CHURCH DETAIL, SEE DETAIL 'M', SHEET C521.
4. STORM DRAIN GUTTER INLET WITH NO HOOD, WITH HEAVY DUTY BICYCLE SAFE GRATE.
5. 12" SQUARE SECURABLE NYLOPLAST YARD DRAIN, PER STANDARD CHURCH DETAIL, SEE DETAILS 'K', SHEET C521.
6. STORM DRAIN PIPE PER VINEYARD CITY STANDARDS. SEE PLAN FOR LENGTH, SIZE, TYPE AND SLOPE. TRENCHING PER STANDARD CHURCH DETAIL, SEE DETAIL 'F', SHEET C531.
7. DOWNSPOUT DRAIN BASIN AND 6" HDPE PIPE FROM DOWNSPOUT BASIN, SLOPE AT 0.50% MINIMUM FROM BASIN, PER STANDARD CHURCH DETAIL, SEE DETAILS 'C AND D', SHEET C531.
8. TAPER LAST 5' OF CURB TO MATCH SIDEWALK HEIGHT, PER STANDARD CHURCH DETAIL, SEE DETAIL 'J', SHEET C531.
9. STORM DRAIN CLEANOUT BOX WITH SNOUT OIL/WATER SEPARATOR, PER STANDARD CHURCH DETAIL, SEE DETAIL 'A', SHEET C531.
10. STORMTECH MC-3500 CHAMBERS OR EQUIVALENT SYSTEM APPROVED PRIOR TO BIDDING. SYSTEM TO OUTLET CONTROL STRUCTURE AS SHOWN ON PLANS ALL PROVIDED BY THE CONTRACTOR. STORMTECH CHAMBER HAS DETENTION CAPACITY OF 12,464 C.F. TOTAL REQUIRED STORAGE = 11,990 C.F. SEE DETAIL 'N', SHEET C521. SHOP DRAWINGS PROVIDED BY MANUFACTURER PRIOR TO BIDDING AND CONSTRUCTION.
11. LANDING AREAS TO HAVE 2% MAXIMUM SLOPE AWAY FROM BUILDING
12. 4' x 4' OUTLET CONTROL STRUCTURE WITH ORIFICE AND OVERFLOW WEIR. SEE DETAIL 'A', SHEET C521 AND DETENTION CALCULATIONS. ORIFICE SIZE = 3.0" Ø
13. ADA PARKING STALL, TOA (TOP OF ASPHALT) SPOT GRADES ARE TO BE STAKED TO ENSURE SLOPE WITHIN ADA PARKING STALL REMAINS UNDER 2.0% MAX. SLOPE.

Monell Engineering
8610 S. Sandy Pkwy, Sandy, UT

STORM RUNOFF
CALCULATION SHEET
Project No. 24510

Title: Orem Vineyard Springwater
Scope: Site Drainage Design
Detention Facilities
Engineer: DJC Check: DJC
Authority: Vineyard Rev. No.: 1

Design Philosophy:
The storm water runoff from the project site will sheet flow to a series of catch basins and inlet boxes where it will be collected and conveyed by an underground pipe system to underground detention storage chambers where the required runoff amount will be detained by means of a baffle wall causing the detained water to back up into the chambers while an orifice in the baffle wall sized per the calculations below will release water into the municipal storm drain system at a rate of 0.15 cfs/ac, as per the allowable rate.

Area Identification	(A)	Runoff Coefficient (C)		(C*A)
Paved	92,250 sf	(2.12 ac)	0.85	= 78,413 sf
Roof Area	18,350 sf	(0.42 ac)	0.90	= 16,515 sf
Landscaped	47,855 sf	(1.10 ac)	0.15	= 7,178 sf
Total	158,455 sf	(3.64 ac)	0.64 (ave)	102,106 sf

Allowable Discharge Rate = 0.15 cfs/ac

100-Year, 24-Hour Storm: Allowable Peak Discharge = 0.55 cfs

Time (min)	Rate (in/hr)	Rainfall (inches)	Q in (cfs)	Add'l Q in (cfs)	Total Q in (cfs)	Q out (cfs)	Storage (cf)
5	4.19	0.521	14.78	0.00	14.78	0.55	4,269
10	3.18	0.793	11.25	0.00	11.25	0.55	6,420
15	2.63	0.983	9.29	0.00	9.29	0.55	7,873
30	1.77	1.320	6.24	0.00	6.24	0.55	10,249
60	1.09	1.640	3.88	0.00	3.88	0.55	**11,990**
120	0.61	1.790	2.12	0.00	2.12	0.55	11,302
180	0.43	1.840	1.45	0.00	1.45	0.55	9,763
360	0.24	1.970	0.78	0.00	0.78	0.55	4,976
720	0.14	2.280	0.45	0.00	0.45	0.45	0
1440	0.08	2.600	0.26	0.00	0.26	0.26	0

Storm Pipe Detention Provided:

Pipe Size	Length (LF)	Unit Storage (CF/LF)	Storage
6 in. Pipe	0	0.196	0 cf
8 in. Pipe	0	0.349	0 cf
12 in. Pipe	0	0.785	0 cf
18 in. Pipe	0	1.767	0 cf
Total Pipe Storage			**0 cf**

Storm Structure Detention Provided:

Amount	Box Length	Box Width	Av. Depth	←	Storage
0	0	0	0		0 cf
Total Structure Storage					**0 cf**

Storage Provided:

Pond	Area(sf)	Depth (ft)	Volume (cu. ft.)
Storage chambers			12464 cf
Parking Area			0 cf
Total Surface Storage			**12464 cf**

Total Detention Provided : **12,464 cf**
Total Detention Required : **11,990 cf**

Orifice Design:
The orifice is designed upon the following data:
Total acreage of development: 3.64 acres
Allowable discharge: 0.55 cfs (0.15 cfs/ac)
Max head (center orifice to hw): 5.02 ft
Diameter for new orifice: **3.0 inch**

$$Q = C_d A_o \sqrt{2gh}$$

PROJECT NOTE:

CONTRACT FOR PROJECT ONLY GOES TO THE CONTRACT LIMIT LINE BUT ALL STORM DRAIN INFRASTRUCTURE SHOWN ON THIS PLAN IS TO BE INCLUDED IN THE PROJECT AS IT IS REQUIRED TO DRAIN THIS PROJECT.

LID STORM WATER NOTES:

AS PER STATE REQUIREMENT 80TH PERCENTILE STORM SHOULD BE RETAINED ON SITE AS L.I.D MEASURE. 80TH PERCENTILE STORM EQUATES TO 0.54" ACROSS THE SITE. PER CALCULATION THE FIRST 7,130 CF OF STORM WATER SHOULD BE RETAINED.
0.54" x 158,455 SQ FT = 7,130 CF

HOWEVER DUE TO HIGH GROUND WATER WHICH WAS ENCOUNTERED DURING THE GEOLOGICAL EVALUATION AS FOUND IN REPORT FROM GSH DATED AUGUST 2, 2024, GROUND WATER BEING FOUND AT A DEPTH OF 4.6' BELOW EXISTING GRADE IN ON OF THE BORE HOLES, WE ARE PROPOSING THAT THIS SITE BE DEVELOPED WITHOUT THE L.I.D. RETENTION REQUIREMENT AND INSTEAD ONLY REQUIRE THE 100 YR 24 HOUR STORM TO BE DETAINED ON SITE.

AVOID CUTTING UNDERGROUND UTILITIES. IT'S COSTLY.
Call BEFORE YOU Dig
1-800-662-4111

NOTICE!
THE CONTRACTOR SHALL BE RESPONSIBLE FOR THE LOCATION, PROTECTION, AND RESTORATION OF ALL BURIED OR ABOVE GROUND UTILITIES, SHOWN OR NOT SHOWN ON THE PLANS.

Printed: 15 Aug 2024 12:55 PM

bhd ARCHITECTS
www.bhdarchitects.com
Phone 801.571.0010
Fax 801.571.0303
Toll Free 888.571.0010
65 East Wadsworth Park Drive
Suite 205 Draper, Utah 84020

PROFESSIONAL ENGINEER
08-15-24
No. 14988925-2202
DANIEL J. CANNING
STATE OF UTAH

THE CHURCH OF JESUS CHRIST OF LATTER-DAY SAINTS

Springwater 9
Vineyard UT Springwater Stake
Approx. 542 South Geneva Road
Vineyard, Utah 84059

Owner #: 502-2004
Plan Series: C300-MH-11
County Parcel: 39:228:0001
BHD #: 2346
Date: 15 Aug 2024

Drawing Issue and Revision Schedule

#	Date	Description
1	15 Aug 2024	Bid Documents

Grading and Drainage Plan - North

C121

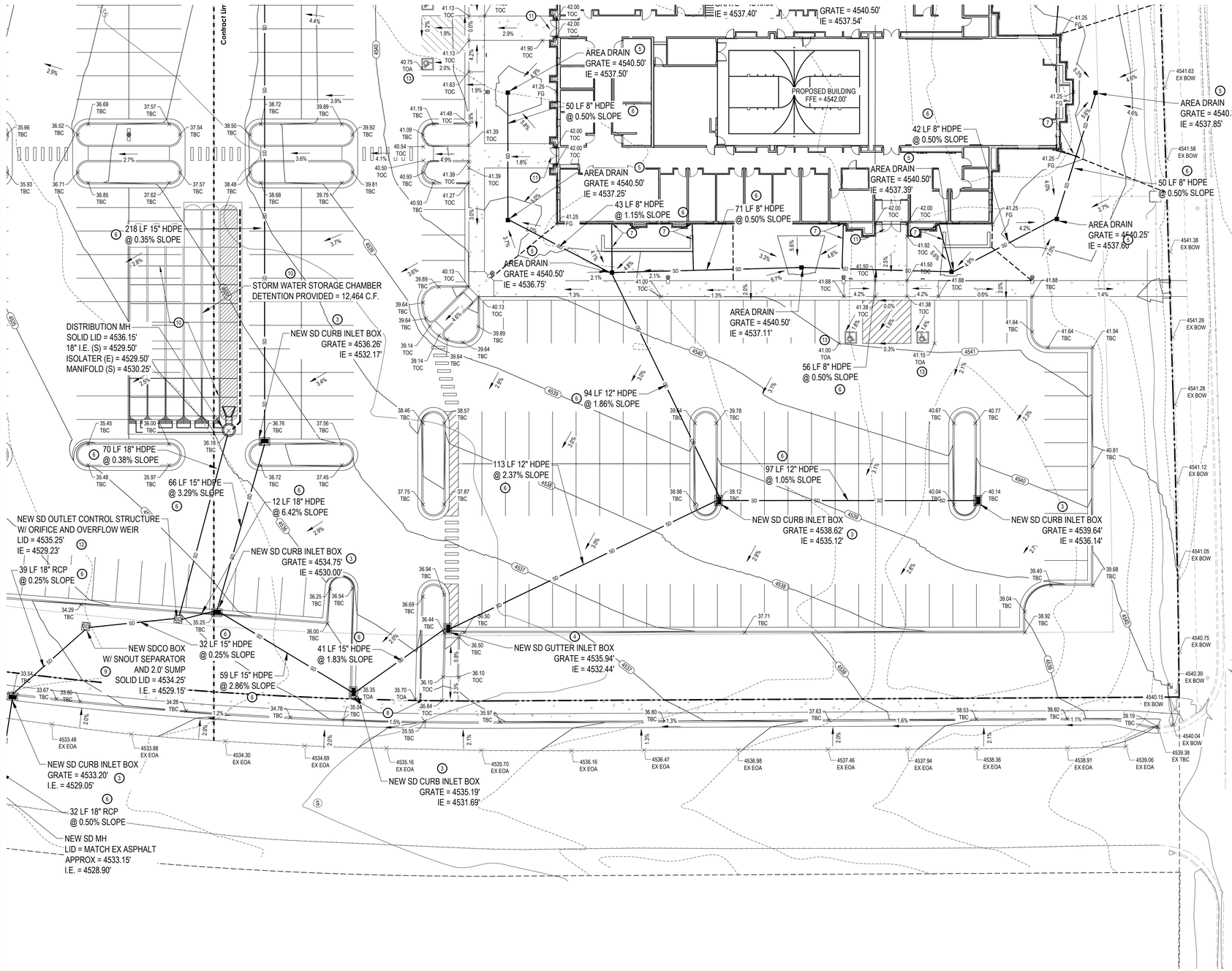

PROJECT NOTE:

CONTRACT FOR PROJECT ONLY GOES TO THE CONTRACT LIMIT LINE BUT ALL STORM DRAIN INFRASTRUCTURE SHOWN ON THIS PLAN IS TO BE INCLUDED IN THE PROJECT AS IT IS REQUIRED TO DRAIN THIS PROJECT.

AVOID CUTTING UNDERGROUND UTILITIES. IT'S COSTLY.
Call BEFORE YOU Dig
1-800-662-4111

NOTICE!

THE CONTRACTOR SHALL BE RESPONSIBLE FOR THE LOCATION, PROTECTION, AND RESTORATION OF ALL BURIED OR ABOVE GROUND UTILITIES, SHOWN OR NOT SHOWN ON THE PLANS.

LID STORM WATER NOTES:

AS PER STATE REQUIREMENT 80TH PERCENTILE STORM SHOULD BE RETAINED ON SITE AS L.I.D MEASURE. 80TH PERCENTILE STORM EQUATES TO 0.54" ACROSS THE SITE. PER CALCULATION THE FIRST 7,130 CF OF STORM WATER SHOULD BE RETAINED.

0.54" x 158,455 SQ FT = 7,130 CF

HOWEVER DUE TO HIGH GROUND WATER WHICH WAS ENCOUNTERED DURING THE GEOLOGICAL EVALUATION AS FOUND IN REPORT FROM GSH DATED AUGUST 2, 2024, GROUND WATER BEING FOUND AT A DEPTH OF 4.6' BELOW EXISTING GRADE IN ON OF THE BORE HOLES. WE ARE PROPOSING THAT THIS SITE BE DEVELOPED WITHOUT THE L.I.D. RETENTION REQUIREMENT AND INSTEAD ONLY REQUIRE THE 100 YR 24 HOUR STORM TO BE DETAINED ON SITE.

NORTH

SCALE: 1" = 20'

0 10' 20' 40' 60'

GENERAL NOTES:

SITE GRADING SHALL BE PERFORMED IN ACCORDANCE WITH THESE PLANS AND SPECIFICATIONS. THE CONTRACTOR SHALL BE RESPONSIBLE FOR REMOVING AND REPLACING ALL SOFT, YIELDING OR UNSUITABLE MATERIALS AND REPLACING WITH SUITABLE MATERIALS. CONTRACTOR SHALL SUBMIT A COMPACTION REPORT PREPARED BY A QUALIFIED REGISTERED SOILS ENGINEER, VERIFYING THAT ALL FILLED AREAS AND SUBGRADE AREAS WITHIN THE BUILDING PAD AREA AND AREAS TO BE PAVED, HAVE BEEN COMPACTED IN ACCORDANCE WITH THESE PLANS & SPECS.

THE CONTRACTOR IS TO USE BEST MANAGEMENT PRACTICES FOR PROVIDING EROSION CONTROL FOR CONSTRUCTION OF THIS PROJECT. SPECIFIC DETAILS SHOWN ON SHEET C171 SHALL BE USED IN COMBINATION WITH OTHER ACCEPTED LOCAL PRACTICES.

EXISTING UNDERGROUND UTILITIES AND IMPROVEMENTS ARE SHOWN IN THEIR APPROXIMATE LOCATIONS BASED UPON RECORD INFORMATION AVAILABLE AT THE TIME OF PREPARATION OF PLANS. LOCATIONS MAY NOT HAVE BEEN VERIFIED IN THE FIELD AND NO GUARANTEE IS MADE AS TO ACCURACY OR COMPLETENESS OF THE INFORMATION SHOWN. IT SHALL BE RESPONSIBILITY OF THE CONTRACTOR TO DETERMINE THE EXISTENCE AND LOCATION OF THOSE UTILITIES SHOWN ON THESE PLANS OR INDICATED IN THE FIELD BY LOCATING SERVICES. ANY ADDITIONAL COSTS INCURRED AS A RESULT OF CONTRACTORS FAILURE TO VERIFY LOCATIONS OF EXISTING UTILITIES PRIOR TO BEGINNING OF CONSTRUCTION IN THEIR VICINITY SHALL BE BORNE BY THE CONTRACTOR AND ASSUMED INCLUDED IN THE CONTRACT.

REFER TO OVER EXCAVATION AND FILL NOTES ON SHEET C111.

KEYED NOTES:

PROVIDE, INSTALL AND/OR CONSTRUCT THE FOLLOWING PER THE SPECIFICATIONS GIVEN OR REFERENCED AND THE DETAILS NOTED AND AS SHOWN ON THE CONSTRUCTION DRAWINGS:

1. GRADE SITE TO ELEVATIONS AND CONTOURS SHOWN ON PLAN.
2. 3' x 3' STORM DRAIN CATCH BASIN WITH HEAVY DUTY BICYCLE SAFE GRATE, PER STANDARD CHURCH DETAIL, SEE DETAIL 'H', SHEET C521.
3. STORM DRAIN CURB INLET WITH HEAVY DUTY BICYCLE SAFE GRATE, PER STANDARD CHURCH DETAIL, SEE DETAIL 'M', SHEET C521.
4. STORM DRAIN GUTTER INLET WITH NO HOOD, WITH HEAVY DUTY BICYCLE SAFE GRATE.
5. 12" SQUARE SECURABLE NYLOPLAST YARD DRAIN, PER STANDARD CHURCH DETAIL, SEE DETAILS 'K', SHEET C521.
6. STORM DRAIN PIPE PER VINEYARD CITY STANDARDS. SEE PLAN FOR LENGTH, SIZE, TYPE AND SLOPE. TRENCHING PER STANDARD CHURCH DETAIL, SEE DETAIL 'F', SHEET C531.
7. DOWNSPOUT DRAIN BASIN AND 6" HDPE PIPE FROM DOWNSPOUT BASIN. SLOPE AT 0.50% MINIMUM FROM BASIN, PER STANDARD CHURCH DETAIL, SEE DETAILS 'C AND D', SHEET C531.
8. TAPER LAST 5' OF CURB TO MATCH SIDEWALK HEIGHT, PER STANDARD CHURCH DETAIL, SEE DETAIL 'J', SHEET C531.
9. STORM DRAIN CLEANOUT BOX WITH SNOUT OIL/WATER SEPARATOR, PER STANDARD CHURCH DETAIL, SEE DETAIL 'A', SHEET C531.
10. STORMTECH MC-3500 CHAMBERS OR EQUIVALENT SYSTEM APPROVED PRIOR TO BIDDING. SYSTEM TO OUTLET CONTROL STRUCTURE AS SHOWN ON PLANS ALL PROVIDED BY THE CONTRACTOR. STORMTECH CHAMBER HAS DETENTION CAPACITY OF 12,464 C.F. TOTAL REQUIRED STORAGE = 11,990 C.F. SEE DETAIL 'N', SHEET C521. SHOP DRAWINGS PROVIDED BY MANUFACTURER PRIOR TO BIDDING AND CONSTRUCTION.
11. LANDING AREAS TO HAVE 2% MAXIMUM SLOPE AWAY FROM BUILDING
12. 4' x 4' OUTLET CONTROL STRUCTURE WITH ORIFICE AND OVERFLOW WEIR. SEE DETAIL 'A', SHEET C521 AND DETENTION CALCULATIONS. ORIFICE SIZE = 3.0" Ø
13. ADA PARKING STALL, TOA (TOP OF ASPHALT) SPOT GRADES ARE TO BE STAKED TO ENSURE SLOPE WITHIN ADA PARKING STALL REMAINS UNDER 2.0% MAX. SLOPE.

Mcneil Engineering
8610 S. Sandy Pkwy, Sandy, UT

STORM RUNOFF CALCULATION SHEET
Project No. 24510

Title :	Orem Vineyard Springwater
Scope :	Site Drainage Design
	Detention Facilities
Engineer : DJC	Check: DJC
Authority : Vineyard	Rev. No.: 1

Design Philosophy:
The storm water runoff from the project site will sheet flow to a series of catch basins and inlet boxes where it will be collected and conveyed by an underground pipe system to underground detention storage chambers where the required runoff amount will be detained by means of a baffle wall causing the detained water to back up into the chambers while an orifice in the baffle wall sized per the calculations below will release water into the municipal storm drain system at a rate of 0.15 cfs/ac, as per the allowable rate.

	Area Identification (A)		Runoff Coefficient (C)		(C*A)
Paved	92,250 sf	(2.12 ac)	0.85	=	78,413 sf
Roof Area	18,350 sf	(0.42 ac)	0.90	=	16,515 sf
Landscaped	47,855 sf	(1.10 ac)	0.15	=	7,178 sf
Total	158,455 sf	(3.64 ac)	0.64 (ave)		102,106 sf

Allowable Discharge Rate = 0.15 cfs/ac

100-Year, 24-Hour Storm:			Allowable Peak Discharge = 0.55 cfs				
Time (min)	Rate (in/hr)	Rainfall (inches)	Q in (cfs)	Add'l Q in (cfs)	Total Q in (cfs)	Q out (cfs)	Storage (cf)
5	4.19	0.521	14.78	0.00	14.78	0.55	4,269
10	3.18	0.793	11.25	0.00	11.25	0.55	6,420
15	2.63	0.983	9.29	0.00	9.29	0.55	7,873
30	1.77	1.320	6.24	0.00	6.24	0.55	10,249
60	1.09	1.640	3.88	0.00	3.88	0.55	**11,990**
120	0.61	1.790	2.12	0.00	2.12	0.55	11,302
180	0.43	1.840	1.45	0.00	1.45	0.55	9,763
360	0.24	1.970	0.78	0.00	0.78	0.55	4,976
720	0.14	2.280	0.45	0.00	0.45	0.45	0
1440	0.08	2.600	0.26	0.00	0.26	0.26	0

Storm Pipe Detention Provided:

Pipe Size	Length (LF)	Unit Storage (CF/LF)	Storage
6 in. Pipe	0	0.196	0 cf
8 in. Pipe	0	0.349	0 cf
12 in. Pipe	0	0.785	0 cf
18 in. Pipe	0	1.767	0 cf
Total Pipe Storage			**0 cf**

Storm Structure Detention Provided:

Amount	Box Length	Box Width	Av. Depth	←	Storage
0	0	0	0		0 cf
Total Structure Storage					**0 cf**

Storage Provided:

Pond	Area(sf)	Depth (ft)	Volume (cu. ft.)
Storage chambers			12464 cf
Parking Area			0 cf
Total Surface Storage			**12464 cf**

Total Detention Provided : 12,464 cf
Total Detention Required : 11,990 cf

Orifice Design:
The orifice is designed upon the following data:

Total acreage of development:	3.64 acres
Allowable discharge:	0.55 cfs (0.15 cfs/ac)
Max head (center orifice to hw):	5.02 ft
Diameter for new orifice:	**3.0 inch**

$$Q = C_d A_o \sqrt{2gh}$$

bhd ARCHITECTS
www.bhdarchitects.com
Phone 801.571.0010
Fax 801.571.0303
Toll Free 888.571.0010
65 East Wadsworth Park Drive
Suite 205 Draper, Utah 84020

PROFESSIONAL ENGINEER
08-15-24
No. 11988925-2202
DANIEL J. CANNING
STATE OF UTAH

THE CHURCH OF JESUS CHRIST OF LATTER-DAY SAINTS

Springwater 9
Vineyard UT Springwater Stake
Approx. 542 South Geneva Road
Vineyard, Utah 84059

Owner #: 502-2004
Plan Series: C300-MH-11
County Parcel: 39:228:0001
BHD #: 2346
Date: 15 Aug 2024

Drawing Issue and Revision Schedule		
#	Date	Description
1	15 Aug 2024	Bid Documents

Grading and Drainage Plan - South

C122

Printed: 15 Aug 2024 12:55 PM

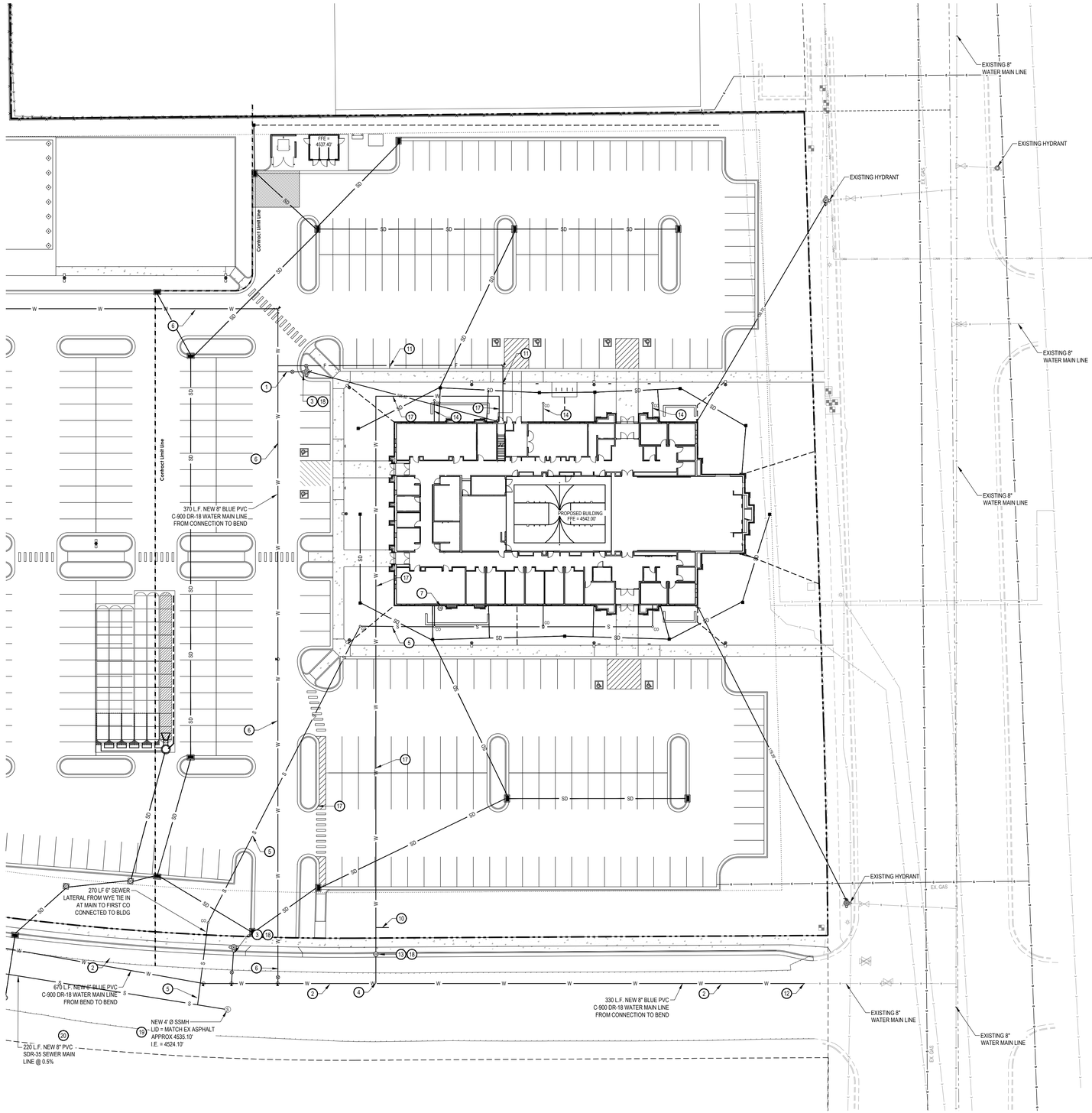

NORTH

SCALE: 1" = 30'

0 15' 30' 60' 90'

GENERAL NOTES:

CONTRACTOR IS TO COORDINATE ALL UTILITIES WITH MECHANICAL DRAWINGS.

ALL NEW WATER CONSTRUCTION TO BE DONE IN ACCORDANCE WITH LOCAL GOVERNING MUNICIPALITY STANDARDS & SPECIFICATIONS.

ALL NEW SANITARY SEWER CONSTRUCTION TO BE DONE IN ACCORDANCE WITH LOCAL GOVERNING MUNICIPALITY STANDARDS & SPECIFICATIONS.

CONTRACTOR SHALL FIELD VERIFY LOCATIONS AND INVERT ELEVATIONS OF EXISTING MANHOLES AND OTHER UTILITIES BEFORE STAKING OR CONSTRUCTING ANY SEWER LINES.

FOUR FEET OF COVER IS REQUIRED OVER ALL SEWER LINES.

MAINTAIN A MINIMUM OF 48 INCHES OF COVER ON ALL WATER LINES.

CONTRACTOR IS TO COORDINATE LOCATIONS OF NEW TELEPHONE SERVICE TO BUILDING WITH CENTURY LINK. A PVC CONDUIT, PLYWOOD BACKBOARD, AND GROUND WIRE IS REQUIRED FOR SERVICE THROUGH PROPERTY; COORDINATE SIZES AND LOCATION WITH CENTURY LINK.

CONTRACTOR IS TO SUBMIT SITE PLAN TO DOMINION ENERGY FOR DESIGN OF GAS LINE SERVICE TO BUILDING. CONTRACTOR TO COORDINATE WITH DOMINION ENERGY FOR CONTRACTOR LIMITS OF WORK VERSUS DOMINION ENERGY LIMITS.

LOCATION OF ALL UNDERGROUND UTILITIES SHOWN ARE APPROXIMATE LOCATIONS. CONTRACTOR IS TO VERIFY CONNECTION POINTS WITH EXISTING UTILITIES. CONTRACTOR IS RESPONSIBLE FOR ANY DAMAGE CAUSED TO EXISTING UTILITIES AND UTILITY STRUCTURE THAT ARE TO REMAIN.

UTILITY ALERT PHONE NUMBERS
- WATER: VINEYARD CITY
- SEWER: VINEYARD CITY
- NATURAL GAS: DOMINION ENERGY
- ELECTRICAL POWER: POWER PROVIDER
- TELEPHONE: CENTURY LINK

KEYED NOTES:

PROVIDE, INSTALL AND/OR CONSTRUCT THE FOLLOWING PER THE SPECIFICATIONS GIVEN OR REFERENCED AND THE DETAILS NOTED AND AS SHOWN ON THE CONSTRUCTION DRAWINGS:

1. NEW 6" PVC C-900 FIRE LINE FOR NEW FIRE HYDRANT PER VINEYARD TOWN STANDARDS AND SPECIFICATIONS, INCLUDING ALL FITTINGS AND THRUST BLOCKING. SEE VINEYARD TOWN DETAIL '13', SHEET C5.04 FOR TRENCHING AND DETAIL '18', SHEET C5.08 FOR THRUST BLOCKING.
2. 8" BLUE PVC C-900 DR-18 WATER LINE, INCLUDING ALL FITTINGS AND THRUST BLOCKING. SEE DETAIL 'C4', SHEET C5.03 FOR TRENCHING AND APWA PLAN NO. 561 FOR THRUST BLOCKING.
3. INSTALL NEW FIRE HYDRANT PER VINEYARD TOWN STANDARD DETAIL '17', SHEET C5.04.
4. CONNECT NEW 2" POLY PIPE WATER SERVICE LINE TO NEW MAIN LINE, PER VINEYARD TOWN STANDARDS AND SPECIFICATIONS.
5. 6" PVC SDR-35 SANITARY SEWER LATERAL @ 1.00% MINIMUM SLOPE, INCLUDING NEW CLEANOUTS PER VINEYARD TOWN STANDARDS AND SPECIFICATIONS. CONNECT TO NEW SEWER MAIN. LATERAL PER VINEYARD TOWN STANDARD DETAIL '20'. SEE SHEET C5.04.
6. 8" BLUE PVC C-900 DR-18 FIRE LINE LOOP, INCLUDING ALL FITTINGS AND THRUST BLOCKING. SEE DETAIL 'C4', SHEET C5.03 FOR TRENCHING AND APWA PLAN NO. 561 FOR THRUST BLOCKING.
7. APPROXIMATE LOCATION OF NEW NATURAL GAS METER(S). CONTRACTOR TO COORDINATE SIZE, DESIGN AND INSTALLATION WITH DOMINION ENERGY AND WITH MECHANICAL PLANS.
8. UNDERGROUND CABLE AND POWER LINES. CONTRACTOR TO COORDINATE WITH COMCAST AND ROCKY MOUNTAIN POWER. SEE ELECTRICAL SITE PLAN FOR POWER CONNECTIONS.
9. TELEPHONE LINE. CONTRACTOR TO PROVIDE TRENCHING 30" DEEP X 24" WIDE FOR CENTURY LINK AND THEN BACKFILL AS REQUIRED. SEE ELECTRICAL SITE PLAN FOR COMMUNICATIONS CONNECTIONS.
10. INSTALL 1-1/2" STOP AND WASTE FOR IRRIGATION, CONNECT TO NEW 2" WATER LATERAL PER VINEYARD TOWN STANDARDS AND SPECIFICATIONS. SEE LANDSCAPE PLANS FOR DETAILS.
11. NEW 6" PVC C-900 FIRE SERVICE WATER LINE PER VINEYARD TOWN STANDARDS AND SPECIFICATIONS, INCLUDING ALL FITTINGS AND THRUST BLOCKING. SEE VINEYARD TOWN DETAIL '13', SHEET C5.04 FOR TRENCHING AND DETAIL '18', SHEET C5.04 FOR THRUST BLOCKING.
12. CONNECT NEW 8" BLUE PVC C-900 DR-18 WATER LINE TO EXISTING 8" WATER MAIN LINE, PER VINEYARD TOWN STANDARDS AND SPECIFICATIONS.
13. NEW 2" WATER METER.PER VINEYARD TOWN STANDARDS.
14. SEWER CLEANOUT AND 6" PVC SEWER LINE FOR USE IN CLEARING SEWER LINES WITHIN THE BUILDING FROM OUTSIDE SEE STANDARD CHURCH DETAIL 'L' SHEET C521.
15. SIDEWALK AREA LIGHT POLE, SEE ELECTRICAL PLANS FOR DETAILS.
16. PARKING LOT AREA LIGHT POLE, SEE ELECTRICAL PLANS DETAILS.
17. 2" POLY PIPE WATER SERVICE LINE, PER VINEYARD TOWN STANDARD DETAIL '19', SEE SHEET C5.04.
18. ENSURE NO DEEP-ROOTED VEGETATION IS LOCATED WITHIN 10' OF FIRE HYDRANT OR WATER METER PER VINEYARD TOWN STANDARDS AND SPECIFICATIONS.
19. 4' DIAMETER SANITARY SEWER MANHOLE, PER APWA PLAN NO. 411.
20. 8" PVC SDR-35 SANITARY SEWER LINE, INCLUDING ALL FITTINGS. SEE APWA PLANS NO. 381 & 382 FOR TRENCHING.

AVOID CUTTING UNDERGROUND UTILITIES. IT'S COSTLY.
Call BEFORE YOU Dig
1-800-662-4111

NOTICE!
THE CONTRACTOR SHALL BE RESPONSIBLE FOR THE LOCATION, PROTECTION, AND RESTORATION OF ALL BURIED OR ABOVE GROUND UTILITIES, SHOWN OR NOT SHOWN ON THE PLANS.

bhd ARCHITECTS
www.bhdarchitects.com
Phone 801.571.0010
Fax 801.571.0303
Toll Free 888.571.0010
65 East Wadsworth Park Drive
Suite 205 Draper, Utah 84020

PROFESSIONAL ENGINEER
08-15-24
No. 11989925-2202
DANIEL J. CANNING
STATE OF UTAH

THE CHURCH OF JESUS CHRIST OF LATTER-DAY SAINTS

Springwater 9
Vineyard UT Springwater Stake
Approx. 540 South Geneva Road
Vineyard, Utah 84059

BHD #: 2346
County Parcel: 39-228:0001
Plan Series: G300-MH-11
Owner #: 502-2004
Date: 15 Aug 2024

Drawing Issue and Revision Schedule

#	Date	Description
1	15 Aug 2024	Bid Documents

Site Utility Plan

C151

Printed: 15 Aug 2024 12:55 PM

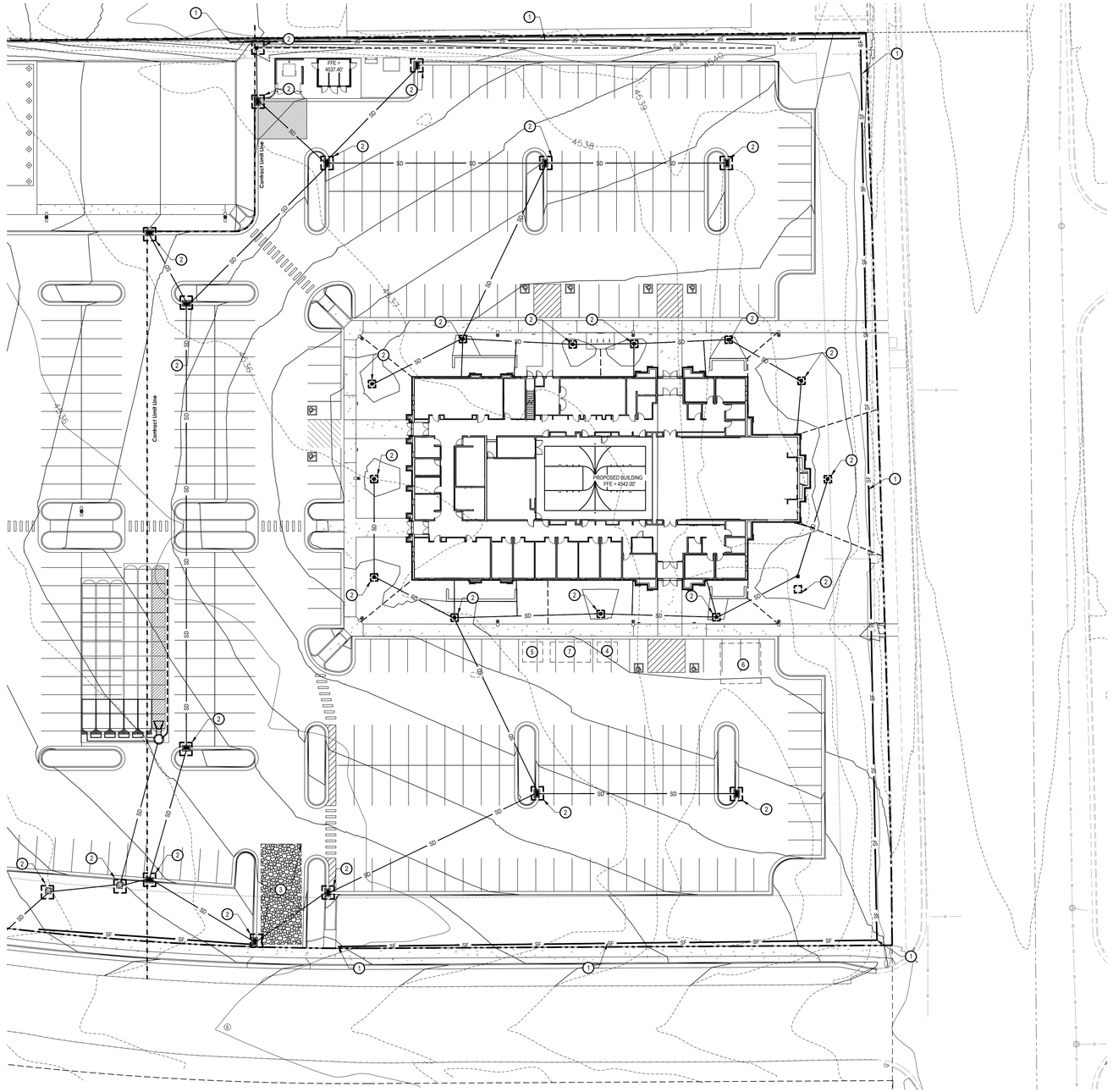

NORTH

SCALE: 1" = 30'

0 15' 30' 60' 90'

GENERAL NOTES:

THE CONTRACTOR IS TO USE BEST MANAGEMENT PRACTICES FOR PROVIDING EROSION CONTROL FOR CONSTRUCTION OF THIS PROJECT. SPECIFIC DETAILS SHOWN ON SHEET C5.04 SHALL BE USED IN COMBINATION WITH OTHER ACCEPTED LOCAL PRACTICES.

ALL MATERIALS AND WORKMANSHIP SHALL CONFORM TO THE LOCAL AGENCY'S EROSION CONTROL STANDARDS AND SPECIFICATIONS AND ALL WORK SHALL BE SUBJECT TO INSPECTION BY THE AGENCY HAVING JURISDICTION. ALSO INSPECTORS WILL HAVE THE RIGHT TO CHANGE THE FACILITIES AS NEEDED.

THE CONTRACTOR SHALL BE RESPONSIBLE FOR FIELD VERIFYING THE LOCATIONS OF ALL EXISTING UTILITIES. IF CONFLICTS OCCUR, THE CONTRACTOR SHALL NOTIFY THE ENGINEER PRIOR TO CONSTRUCTION TO DETERMINE IF ANY FIELD ADJUSTMENTS SHOULD BE MADE.

THE CONTRACTOR SHALL PROVIDE ADEQUATE DUST CONTROL.

WHEN GRADING OPERATIONS HAVE BEEN COMPLETED AND THE DISTURBED GROUND SHALL BE LEFT "OPEN" FOR 30 DAYS OR MORE THE AREA SHALL BE FURROWED PARALLEL TO THE CONTOURS OF THE AREA.

THE CONTRACTOR SHALL MODIFY EROSION CONTROL MEASURES TO ACCOMMODATE PROJECT PLANNING.

MAINTENANCE:

THE OWNER'S REPRESENTATIVE SHALL MAKE ROUTINE CHECKS ON ALL EROSION CONTROL MEASURES TO DETERMINE IF REPAIRS OR SEDIMENT REMOVAL IS NECESSARY. DUE TO CONDITIONS THAT MAY ARISE IN THE FIELD, ADDITIONAL CONTROL MAY BE DETERMINED TO BE NECESSARY.

SILT FENCE BARRIERS SHALL BE INSPECTED IMMEDIATELY AFTER EACH RAINFALL AND AT THE LEAST DAILY DURING PROLONGED RAINFALL.

CLOSE ATTENTION SHALL BE PAID TO THE REPAIR OF DAMAGED SILT FENCES, END RUNS, AND UNDERCUTTING BENEATH SILT FENCING.

NECESSARY REPAIRS TO BARRIERS OR REPLACEMENT OF SILT FENCING SHALL BE ACCOMPLISHED PROMPTLY.

SEDIMENT DEPOSITS SHOULD BE REMOVED AFTER EACH RAINFALL. THEY MUST BE REMOVED WHEN THE LEVEL OF DEPOSITION REACHES APPROXIMATELY ONE-HALF THE HEIGHT OF THE BARRIER.

KEYED NOTES:

PROVIDE, INSTALL AND/OR CONSTRUCT THE FOLLOWING PER THE SPECIFICATIONS GIVEN OR REFERENCED AND THE DETAILS NOTED AND AS SHOWN ON THE CONSTRUCTION DRAWINGS:

1. SILT FENCE AS SHOWN ON PLAN. SEE DETAIL 'C3', SHEET C5.03.
2. INLET PROTECTION AROUND EXISTING OR NEW STORM DRAIN CATCH BASINS OR CURB INLETS. SEE DETAIL 'A1', SHEET C5.03.
3. TEMPORARY CONSTRUCTION ENTRANCE. SEE DETAIL 'C1', SHEET C5.03. LOCATION SHOWN IS SUGGESTIVE. CONTRACTOR TO RELOCATE AS NEEDED.
4. CONCRETE WASHOUT AREA. SEE DETAIL 'A3', SHEET C5.03. LOCATION SHOWN IS SUGGESTIVE. CONTRACTOR TO RELOCATE AS NEEDED.
5. PORTABLE TOILET. SEE DETAIL 'C5', SHEET C5.03. LOCATION SHOWN IS SUGGESTIVE. CONTRACTOR TO RELOCATE AS NEEDED.
6. TOPSOIL STOCK PILE AREA. MAINTAIN SILT FENCE AROUND PERIMETER AT ALL TIMES. CONTROL DUST FROM PILE BY EITHER COVERING OR KEEPING MOIST. LOCATION SHOWN IS SUGGESTIVE. CONTRACTOR TO RELOCATE AS NEEDED.
7. CONSTRUCTION DUMPSTER, CHECK LEVEL DAILY, LEGALLY DISPOSE OF WASTE AS NEEDED. LOCATION SHOWN IS SUGGESTIVE. CONTRACTOR TO RELOCATE AS NEEDED.

AVOID CUTTING UNDERGROUND UTILITIES. IT'S COSTLY.
Call BEFORE YOU Dig
1-800-662-4111

NOTICE!
THE CONTRACTOR SHALL BE RESPONSIBLE FOR THE LOCATION, PROTECTION, AND RESTORATION OF ALL BURIED OR ABOVE GROUND UTILITIES, SHOWN OR NOT SHOWN ON THE PLANS.

bhd ARCHITECTS
www.bhdarchitects.com
Phone 801.571.0010
Fax 801.571.0303
Toll Free 888.571.0010
65 East Wadsworth Park Drive
Suite 205 Draper, Utah 84020

PROFESSIONAL ENGINEER
08-15-24
No. 11988925-2202
DANIEL J. CANNING
STATE OF UTAH

THE CHURCH OF JESUS CHRIST OF LATTER-DAY SAINTS

Springwater 9
Vineyard UT Springwater Stake
Approx. 542 South Geneva Road
Vineyard, Utah 84059

BHD #: 2346
County Parcel: 39:228:0001
Plan Series: C300-MH-11
Owner #: 502-2004
Date: 15 Aug 2024

Drawing Issue and Revision Schedule

#	Date	Description
1	15 Aug 2024	Bid Documents

Erosion Control Plan

C171

Printed: 15 Aug 2024 12:55 PM

NOTES
1. 1" prior to seeding, 2" prior to sodding, 4" in planting areas.
2. Expansion joint material shall be recessed 1/4" where sealant is not applied, and 1/2" where sealant is applied.
3. Epoxy-coated reinforcement steel bars shall be used for all concrete reinforcing used for all site concrete elements.

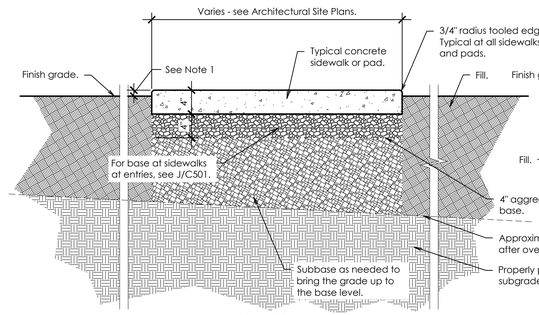

FOR USE ON SITE

A SIDEWALK DETAIL
Scale: 1" = 1'-0"

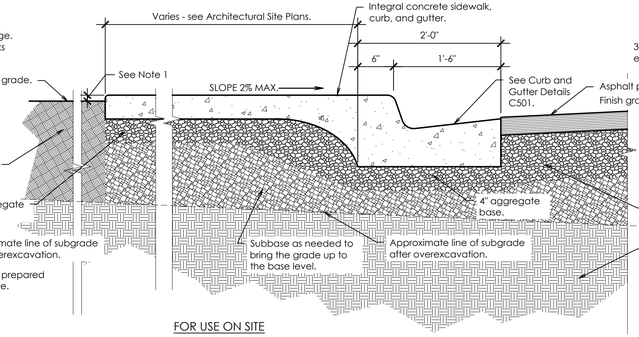

FOR USE ON SITE

B SIDEWALK, CURB AND GUTTER
Scale: 1" = 1'-0"

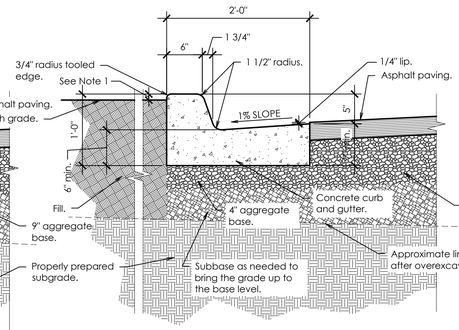

FOR USE ON SITE WHERE WATER DRAINS TOWARD CURB

C CURB AND GUTTER - IN FLOW
Scale: 1" = 1'-0"

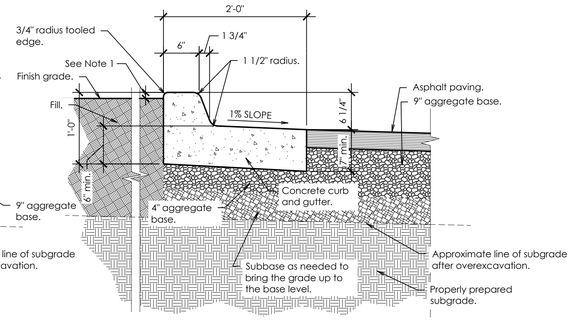

FOR USE ON SITE WHERE WATER DRAINS AWAY FROM CURB

D CURB AND GUTTER - OUT FLOW
Scale: 1" = 1'-0"

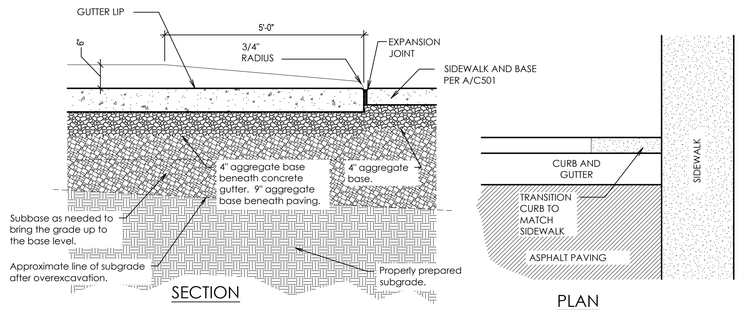

FOR USE ON SITE

E CURB TRANSITION
Scale: Not to Scale

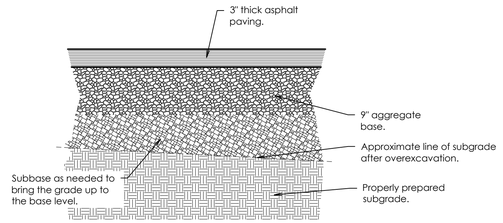

FOR USE ON SITE

F ASPHALT PAVING
Scale: 1" = 1'-0"

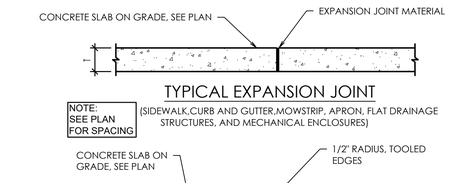

H EXPANSION AND CONTROL JOINTS
Scale: Not to Scale

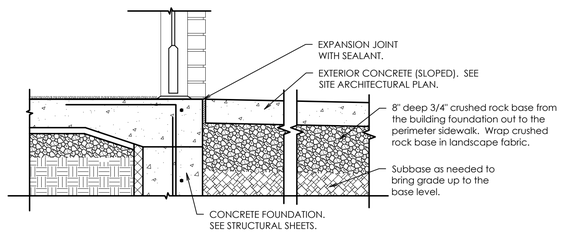

J TYPICAL ENTRY AT DOOR
Scale: 1" = 1'-0"

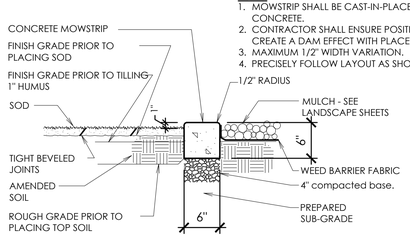

NOTES:
1. MOWSTRIP SHALL BE CAST-IN-PLACE AND POURED USING TYPICAL WEIGHT STRUCTURAL CONCRETE.
2. CONTRACTOR SHALL ENSURE POSITIVE DRAINAGE AROUND MOWSTRIPS - DO NOT CREATE A DAM EFFECT WITH PLACEMENT OF MOWSTRIP.
3. MAXIMUM 1/2" WIDTH VARIATION.
4. PRECISELY FOLLOW LAYOUT AS SHOWN ON THE SITE ARCHITECTURAL PLAN.

K CONCRETE MOW STRIP
Scale: 1" = 1'-0"

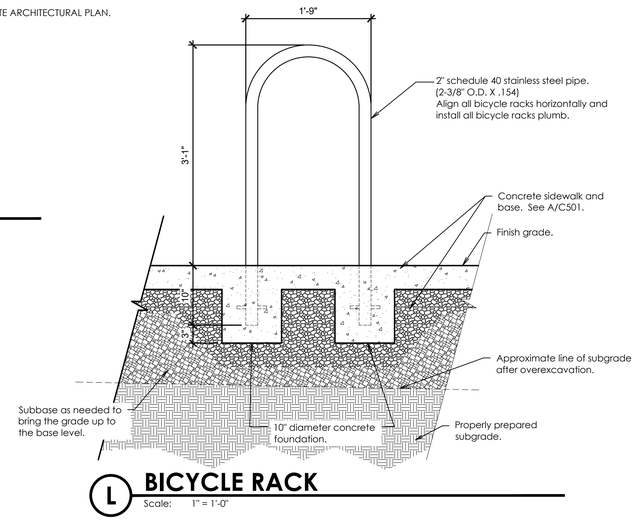

L BICYCLE RACK
Scale: 1" = 1'-0"

bhd ARCHITECTS
www.bhdarchitects.com
Phone 801.571.0010
Fax 801.571.0303
Toll Free 888.571.0010
65 East Wadsworth Park Drive
Suite 205 Draper, Utah 84020

LICENSED ARCHITECT Lafe Theodore Harris 15 Aug 2024 #6378-0301 STATE OF UTAH

THE CHURCH OF JESUS CHRIST OF LATTER-DAY SAINTS

Springwater 9
Vineyard UT Springwater Stake

Approx. 542 South Geneva Road
Vineyard, Utah 84059

Owner #: 502-2004
Plan Series: G300-MH-11
County Parcel: 39:228:0001
BHD #: 2346
Date: 15 Aug 2024

Drawing Issue and Revision Schedule

#	Date	Description
1	15 Aug 2024	Bid Documents

Site Details

C501

Printed: 15 Aug 2024 10:41 AM

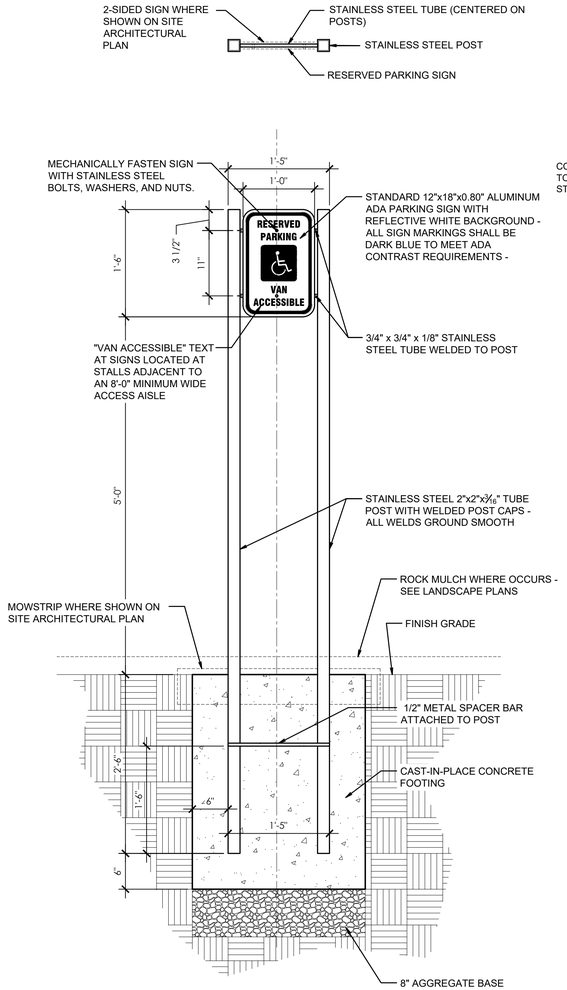

A ACCESSIBLE PARKING SIGN

Scale: 1" = 1'-0"

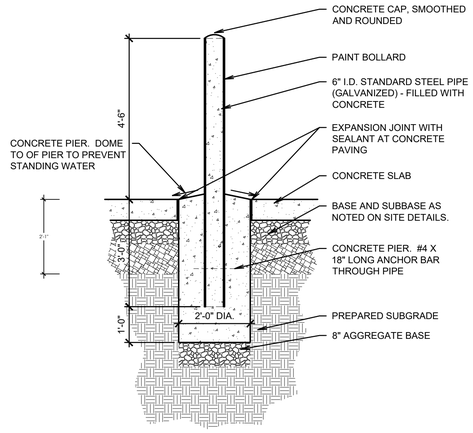

B BOLLARD DETAIL

Scale: 1/2" = 1'-0"

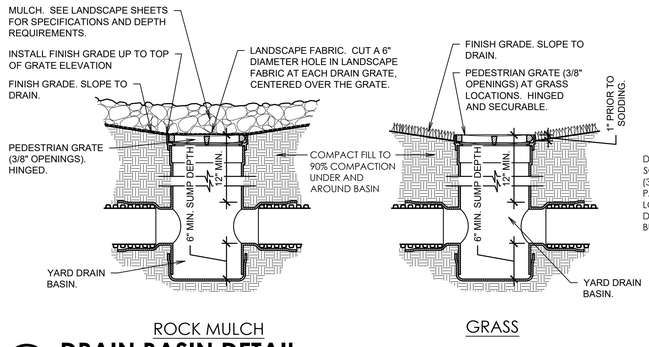

C DRAIN BASIN DETAIL

Scale: 1" = 1'-0"

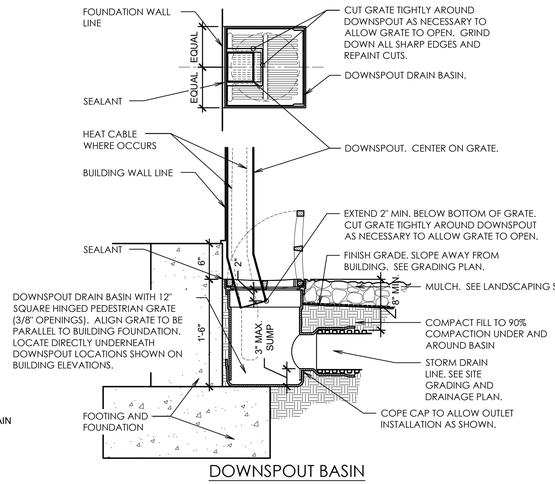

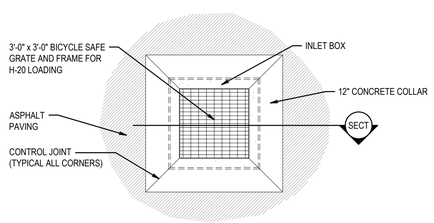

NOTES:
1. GRATE AND FRAMES SHALL BE HOT-DIPPED GALVANIZED.
2. DOWEL LAPS SHALL BE 24".
3. COAT ALL METAL PARTS WITH ASPHALTUM PAINT.

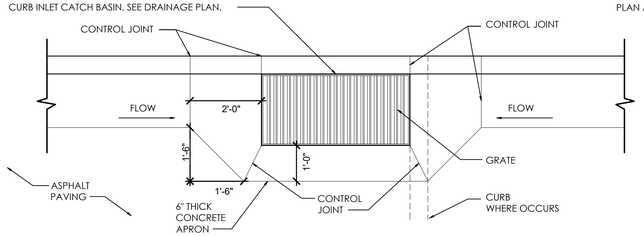

CURB INLET

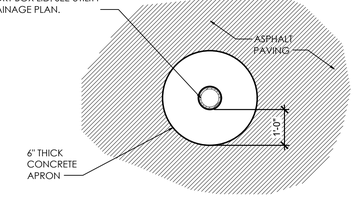

SEWER CLEANOUT, VALVE BOX, INSPECTION PORT

D CONCRETE COLLARS AND APRONS

Scale: NOT TO SCALE

NOTES:
1. UNLESS REQUIRED OTHERWISE BY THE AUTHORITY HAVING JURISDICTION, USE A LIGHT BROOM FINISH ON RAMPS AND LANDINGS TO MATCH THE FINISHES ON THE SIDEWALKS.
2. 5% (MAXIMUM) IN DIRECTION OF TRAVEL. LIMIT CROSS SLOPE ON SIDEWALKS 2%.
3. ALL LANDINGS MUST HAVE 1:48 CROSS SLOPE AND RUNNING SLOPE. LANDING MUST BE AS WIDE AS THE RAMP.
4. CROSS SLOPE ON RAMP MUST BE 1:48 OR LESS.
5. COUNTER SLOPES OF ADJOINING GUTTERS AND PAVING, ADJACENT TO THE CURB RAMP SHALL NOT BE STEEPER THAN 1:20 (5%).

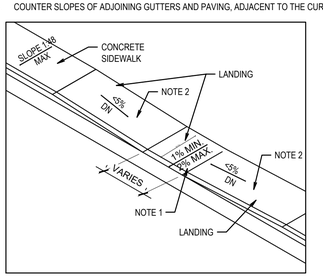

TYPE B

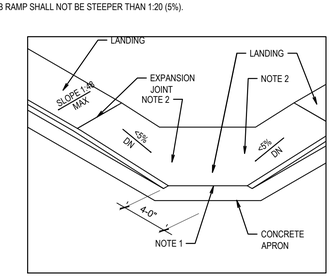

TYPE D

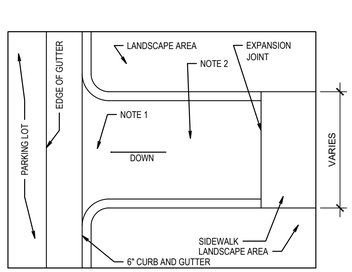

TYPE E

E ACCESSIBLE SLOPED SIDEWALKS

Scale: not to scale

bhd ARCHITECTS
www.bhdarchitects.com
Phone 801.571.0010
Fax 801.571.0303
Toll Free 888.571.0010
65 East Wadsworth Park Drive
Suite 205 Draper, Utah 84020

LICENSED ARCHITECT Lafe Theodore Harris 8/5/2024 #6278878-0301 STATE OF UTAH

THE CHURCH OF JESUS CHRIST OF LATTER-DAY SAINTS

Springwater 9
Vineyard UT Springwater Stake

Approx. 542 South Geneva Road
Vineyard, Utah 84059

Owner #: 502-2004
Plan Series: G300-MH-11
County Parcel: 39-228:0001
BHD #: 2346
Date: 15 Aug 2024

Drawing Issue and Revision Schedule

#	Date	Description
1	15 Aug 2024	Bid Documents

Site Details

C502

Printed: 15 Aug 2024 10:42 AM

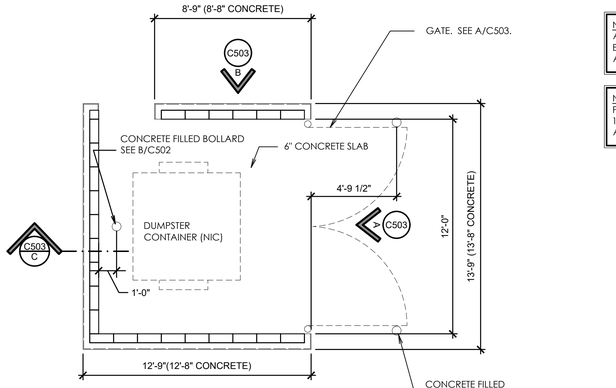

1 DUMPSTER ENCLOSURE PLAN

Scale: 1/4" = 1'-0"



NOTE
ALL STEEL COMPONENTS OF THE DUMPSTER ENCLOSURE GATE SHALL BE HOT-DIP GALVANIZED AND POWDER COATED.

NOTE
PROVIDE (3) SURFACE - MOUNTED MUSHROOM STOPS: 1 AT CLOSED POSITION, AND 1 FOR EACH GATE LEAF AT THE OPEN POSITION.

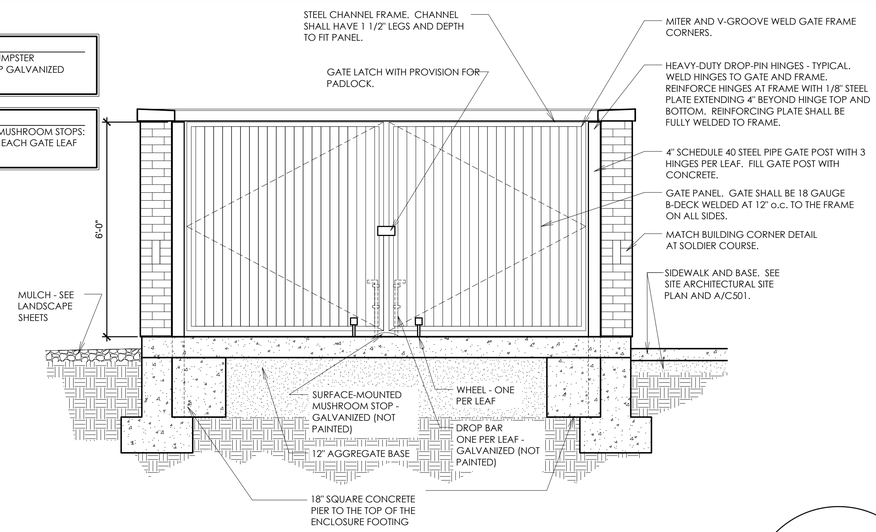

A DUMPSTER GATE ELEVATION

Scale: 1/2" = 1'-0"

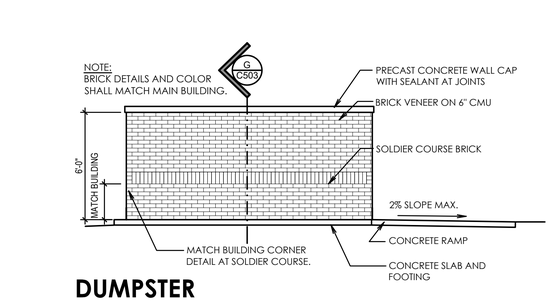

B DUMPSTER ENCLOSURE ELEVATION

Scale: 1/4" = 1'-0"

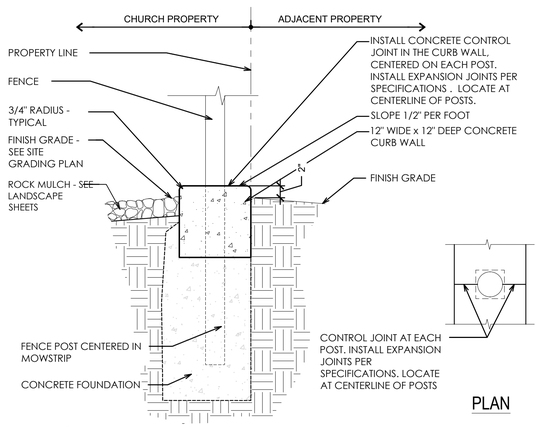

E FENCE AND MOWSTRIP DETAIL

Scale: 1" = 1'-0"

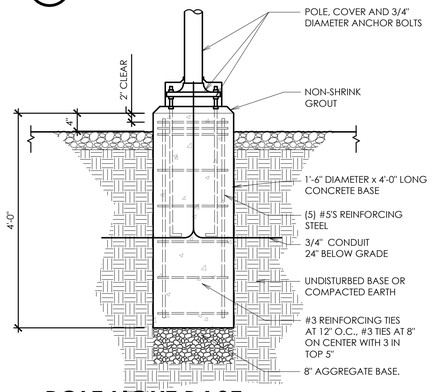

D POLE LIGHT BASE IN LANDSCAPING AREAS

Scale: 3/4" = 1'-0"

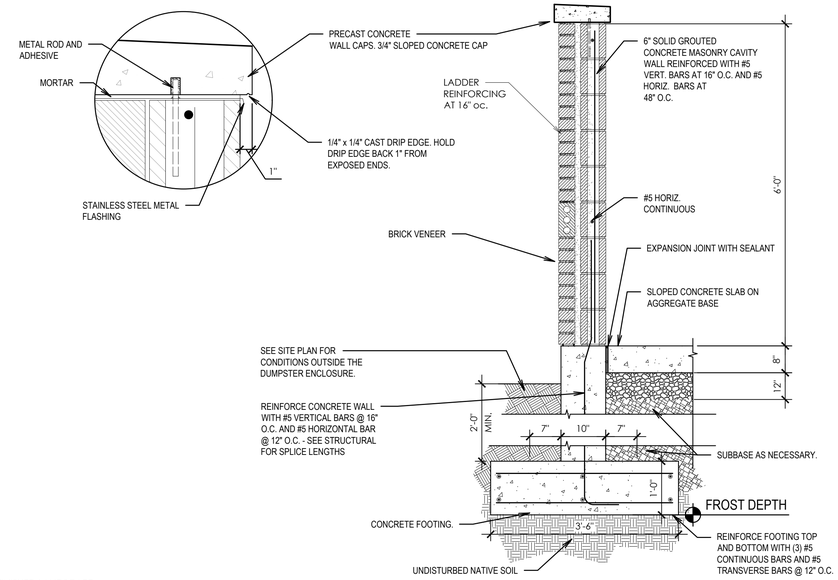

C DUMPSTER ENCLOSURE WALL SECTION

Scale: 3/4" = 1'-0"

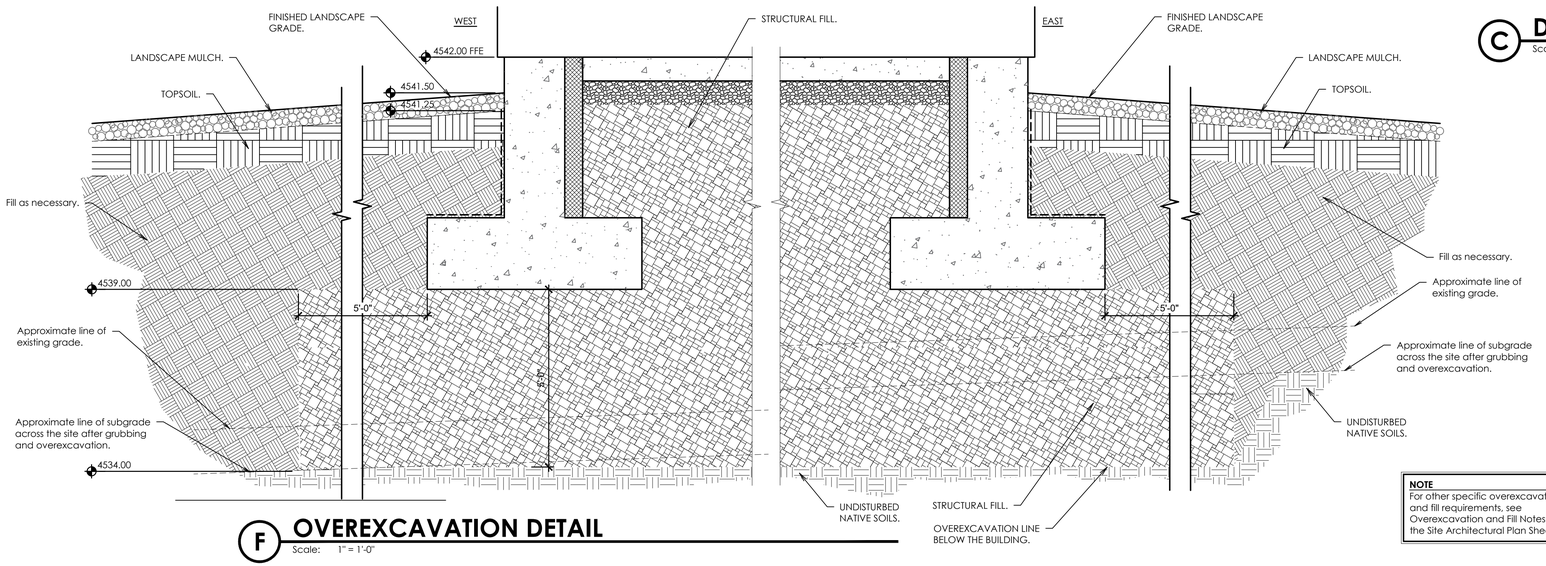

NOTE
For other specific overexcavation and fill requirements, see Overexcavation and Fill Notes on the Site Architectural Plan Sheets.

F OVEREXCAVATION DETAIL

Scale: 1" = 1'-0"

bhd ARCHITECTS
www.bhdarchitects.com
Phone 801.571.0010
Fax 801.571.0303
Toll Free 888.571.0010
65 East Wadsworth Park Drive
Suite 205 Draper, Utah 84020

LICENSED ARCHITECT
Lafe Theodore Harris
#6278878-0301
STATE OF UTAH

THE CHURCH OF JESUS CHRIST OF LATTER-DAY SAINTS

Springwater 9
Vineyard UT Springwater Stake

Approx. 543 South Geneva Road
Vineyard, Utah 84059

Owner #: 502-2004
Plan Series: C300-MH-11
County Parcel: 39-228-0001
BHD #: 2346
Date: 15 Aug 2024

Drawing Issue and Revision Schedule

#	Date	Description
1	15 Aug 2024	Bid Documents

Site Details

C503

Printed: 15 Aug 2024 10:43 AM

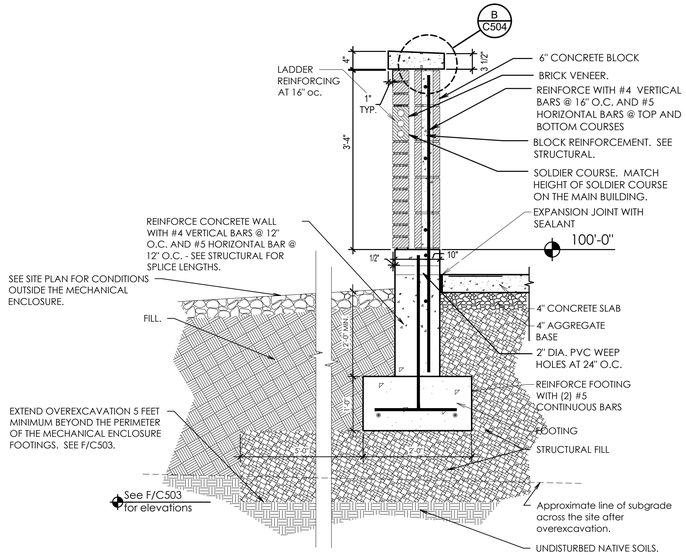

A MECHANICAL ENCLOSURE WALL SECTION

Scale: 3/4" = 1'-0"

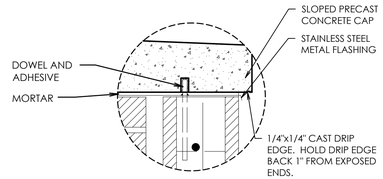

B PRECAST CONCRETE CAP

Scale: NOT TO SCALE

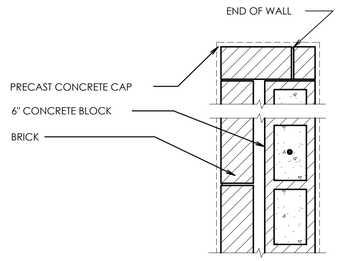

C MECHANICAL ENCLOSURE WALL PLAN

Scale: 3/4" = 1'-0"

NOTE:
BRICK DETAILS AND COLOR SHALL MATCH MAIN BUILDING.

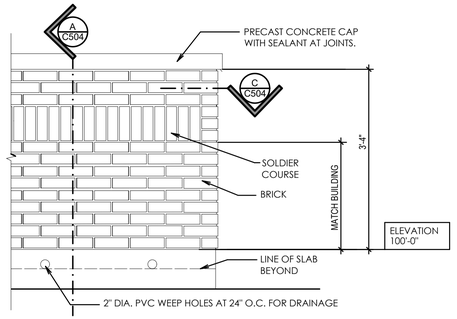

D MECHANICAL ENCLOSURE WALL ELEVATION

Scale: 3/4" = 1'-0"

bhd ARCHITECTS
www.bhdarchitects.com
Phone 801.571.0010
Fax 801.571.0303
Toll Free 888.571.0010
65 East Wadsworth Park Drive
Suite 205 Draper, Utah 84020

LICENSED ARCHITECT
Lafe Theodore Harris
#6278878-0301
STATE OF UTAH

THE CHURCH OF JESUS CHRIST OF LATTER-DAY SAINTS

Springwater 9
Vineyard UT Springwater Stake

Approx. 542 South Geneva Road
Vineyard, Utah 84059

Date: 15 Aug 2024
BHD #: 2346
County Parcel: 39:228:0001
Plan Series: G300-MH-11
Owner #: 502-2004

Drawing Issue and Revision Schedule

#	Date	Description
1	15 Aug 2024	Bid Documents

Site Details

C504

Printed: 15 Aug 2024 10:45 AM

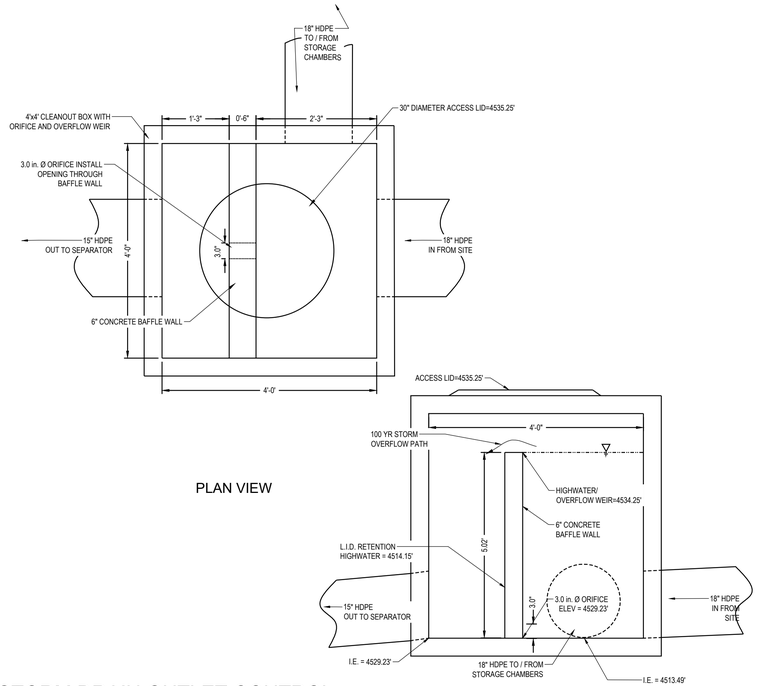

A STORM DRAIN OUTLET CONTROL STRUCTURE WITH ORIFICE AND OVERFLOW WEIR

SCALE: N.T.S.

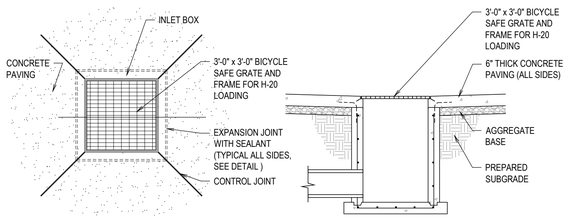

H INLET BOX IN CONCRETE PAVING

SCALE: N.T.S.

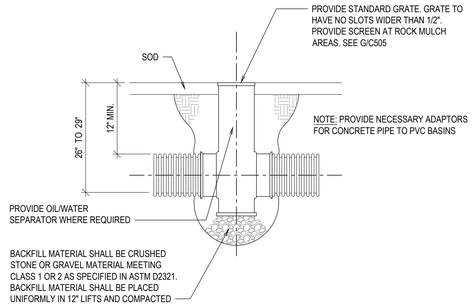

K 12" AREA NYLOPLAST DRAIN BOX

SCALE: N.T.S. NOTE : (DIAMETER OF BASIN DETERMINED BY NUMBER OF PIPES IN AND OUT)

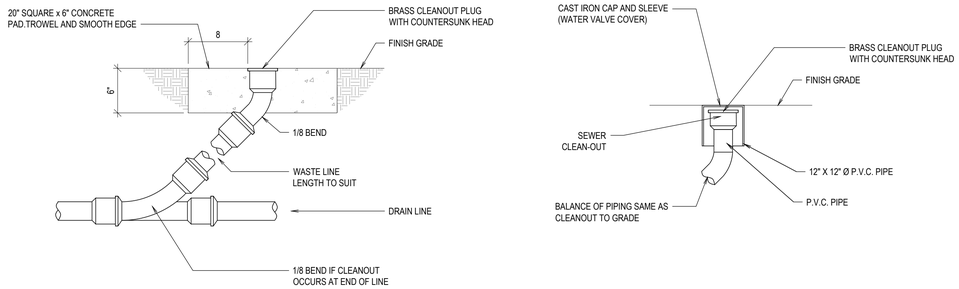

L CLEAN-OUT TO GRADE (COTG) (CONCRETE & GRADE)

SCALE: N.T.S.

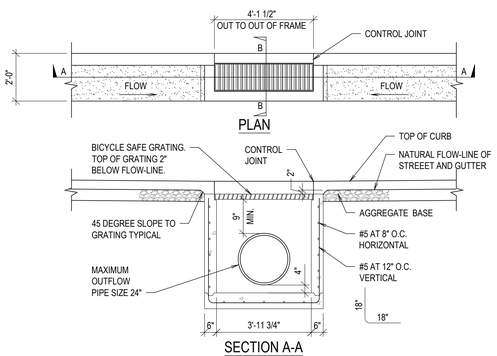

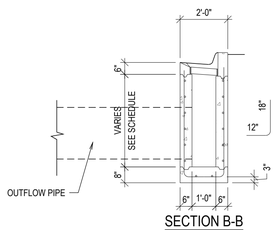

NOTES:
1. MATERIALS, CONSTRUCTION, AND WORKMANSHIP SHALL BE IN ACCORDANCE WITH CURRENT EDITION OF "STATE STD. SPEC'S FOR ROAD AND BRIDGE CONST.", ADDENDUMS AND SPECIAL PROVISIONS THERETO.
2. ALL STEEL SHALL HAVE A MINIMUM OF 2" CONCRETE COVER.
3. GREY IRON CASTING: ASTM A48 CLASS 30 MINIMUM.
4. 2"x4" SHEAR KEY REQUIRED BOTH WAYS.

M SINGLE GUTTER INLET BOX

SCALE: N.T.S.

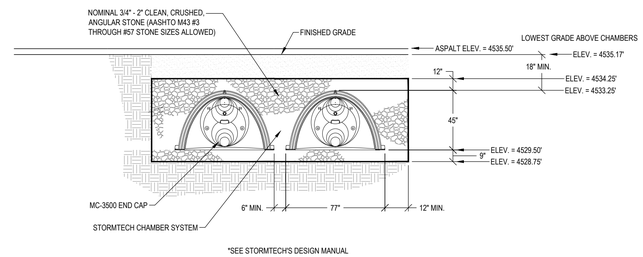

*SEE STORMTECH'S DESIGN MANUAL

N STORMTECH CHAMBER SECTION DETAIL

SCALE: N.T.S.

ADS

User Inputs

Chamber Model:	MC-3500
Outlet Control Structure:	Yes
Project Name:	Springwater LDS Church
Engineer:	Daniel Canning
Project Location:	Utah
Measurement Type:	Imperial
Required Storage Volume:	11990 cubic ft.
Stone Porosity:	40%
Stone Foundation Depth:	9 in.
Stone Above Chambers:	12 in.
Design Constraint Dimensions:	(59 ft. x 90 ft.)

Results

System Volume and Bed Size

Installed Storage Volume:	12464.19 cubic ft.
Storage Volume Per Chamber:	109.90 cubic ft.
Number Of Chambers Required:	63
Number Of End Caps Required:	12
Chamber Rows:	6
Maximum Length:	88.72 ft.
Maximum Width:	43.60 ft.
Approx. Bed Size Required:	3728.49 square ft.
Average Cover Over Chambers:	N/A .

System Components

Amount Of Stone Required:	497 cubic yards
Volume Of Excavation (Not Including Fill):	760 cubic yards
Total Non-woven Geotextile Required:	1892 square yards
Woven Geotextile Required (excluding Isolator Row):	117 square yards
Woven Geotextile Required (Isolator Row):	97 square yards
Total Woven Geotextile Required:	214 square yards
Impervious Liner Required:	698 square yards

Impervious Liner notes:

Technical Note 6.50 : Thermoplastic Liners for Detention Systems

The impervious liner quantity shown is only an estimate. ADS does not provide or design impervious liners. Please contact a liner manufacturer for a final estimate.

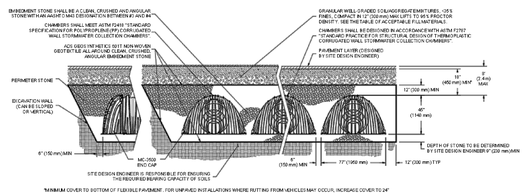

bhd ARCHITECTS
www.bhdarchitects.com
Phone 801.571.0010
Fax 801.571.0303
Toll Free 888.571.0010
65 East Wadsworth Park Drive
Suite 205 Draper, Utah 84020

PROFESSIONAL ENGINEER
08-15-24
No. 10088925-2202
DANIEL J. CANNING
STATE OF UTAH

THE CHURCH OF JESUS CHRIST OF LATTER-DAY SAINTS

Springwater 9
Vineyard UT Springwater Stake

Approx. 542 South Geneva Road
Vineyard, Utah 84059

Owner #: 502-2004
Plan Series: C300-MH-11
County Parcel: 39:228:0001
BHD #: 2346
Date: 15 Aug 2024

Drawing Issue and Revision Schedule		
#	Date	Description
1	15 Aug 2024	Bid Documents

Civil Details

C521

Printed: 15 Aug 2024 12:55 PM

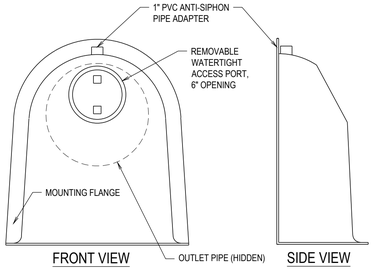

FRONT VIEW

SIDE VIEW

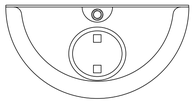

PLAN VIEW

SNOUT CONFIGURATION

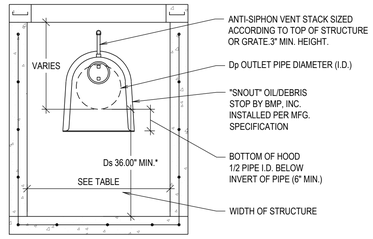

STRUCTURE DIMENSIONS — PLAN DIMENSIONS FOR A STRUCTURE SHOULD BE UP TO 7X AREA OF OUTLET PIPE FOR MAXIMUM POLLUTANT REMOVAL EFFICIENCY AND MINIMAL CLEANOUT FREQUENCY.
(SEE "MAINTENANCE CONSIDERATIONS" DOCUMENT FOR MORE INFORMATION)

SIZING EXAMPLES:

OUTLET HOLE SIZE	SNOUT SIZE	STRUCTURE SIZE
11.9" O.D. OR LESS	12 F or R	R FITS 36"-48" DIAM STRUCTURE
12.0"-17.9" O.D.	18 F or R	R FITS 48"-60" DIAM STRUCTURE
18.0"-23.9" O.D.	24 F or R	R FITS 48"-60" DIAM STRUCTURE
24.0"-29.9" O.D.	30 F or R	R FITS 60"-72" DIAM STRUCTURE
30.0"-47.9" O.D.	48 F	
30.0"-53.9" O.D.	54R/72	FITS 72" DIAM STRUCTURE ONLY
48.0"-95.9" O.D.	96 F	

NOTE: USE ONLY "F" SERIES SNOUTS FOR RECTANGULAR OR SQUARE STRUCTURES, AVAILABLE IN 12", 18", 24", 30", 48", AND 96" SIZES. USE ONLY "R" SERIES SNOUTS FOR ROUND STRUCTURES, AVAILABLE IN 12", 18", 24", 30", AND 54" SIZES.

SPECIFICATIONS:

1. ALL HOODS AND TRAPS FOR CATCH BASINS AND WATER QUALITY STRUCTURES SHALL BE AS MANUFACTURED BY:
   BEST MANAGEMENT PRODUCTS, INC.
   53 MT. ARCHER RD.
   LYME, CT 06371
   (860) 434-0277, (860) 434-3195 FAX
   TOLL FREE: (800) 504-8008 OR (888) 354-7585
   WEB SITE: www.bmpinc.com
   OR PRE-APPROVED EQUAL
2. ALL HOODS SHALL BE CONSTRUCTED OF A GLASS REINFORCED RESIN COMPOSITE WITH ISO GEL COAT EXTERIOR FINISH WITH A MINIMUM 0.125" LAMINATE THICKNESS.
3. ALL HOODS SHALL BE EQUIPPED WITH A WATERTIGHT ACCESS PORT, A MOUNTING FLANGE, AND AN ANTI-SIPHON VENT AS DRAWN. (SEE CONFIGURATION DETAIL)
4. THE SIZE AND POSITION OF THE HOOD SHALL BE DETERMINED BY OUTLET PIPE SIZE AS PER MANUFACTURER'S RECOMMENDATION.
5. THE BOTTOM OF THE HOOD SHALL EXTEND DOWNWARD A DISTANCE EQUAL TO 1/2 THE OUTLET PIPE DIAMETER WITH A MINIMUM DISTANCE OF 6" FOR PIPES <12" I.D.
6. THE ANTI-SIPHON VENT SHALL EXTEND ABOVE HOOD BY MINIMUM OF 3" AND A MAXIMUM OF 24" ACCORDING TO STRUCTURE CONFIGURATION.
7. THE SURFACE OF THE STRUCTURE WHERE THE HOOD IS MOUNTED SHALL BE FINISHED
   SMOOTH AND FREE OF LOOSE MATERIAL.
8. THE HOOD SHALL BE SECURELY ATTACHED TO STRUCTURE WALL WITH 3/8" STAINLESS STEEL BOLTS AND OIL-RESISTANT GASKET AS SUPPLIED BY MANUFACTURER. (SEE INSTALLATION DETAIL)
9. INSTALLATION INSTRUCTIONS SHALL BE FURNISHED WITH MANUFACTURER SUPPLIED INSTALLATION KIT.
   INSTALLATION KIT SHALL INCLUDE:
   A. INSTALLATION INSTRUCTIONS
   B. PVC ANTI-SIPHON VENT PIPE AND ADAPTER
   C. OIL-RESISTANT CRUSHED CELL FOAM GASKET WITH PSA BACKING
   D. 3/8" STAINLESS STEEL BOLTS
   E. ANCHOR SHIELDS

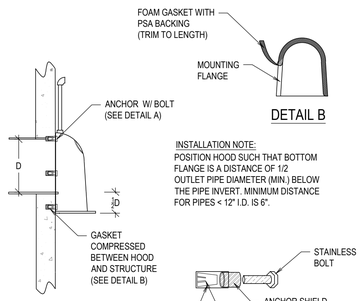

DETAIL B

INSTALLATION NOTE:
POSITION HOOD SUCH THAT BOTTOM FLANGE IS A DISTANCE OF 1/2 OUTLET PIPE DIAMETER (MIN.) BELOW THE PIPE INVERT. MINIMUM DISTANCE FOR PIPES < 12" I.D. IS 6".

DETAIL A

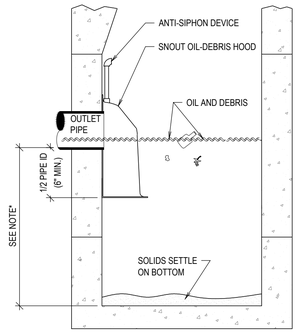

NOTE:
SUMP DEPTH OF 36" MIN. FOR < OR= 12" DIA. OUTLET.
FOR OUTLETS >OR= 15", DEPTH = 2.5 TO 3 X's DIAM.

TYPICAL INSTALLATION

US Patent # 6126817

HOOD SPECIFICATION FOR CATCH BASINS AND WATER QUALITY STRUCTURES		
DESCRIPTION	DATE	SCALE
OIL- DEBRIS HOOD SPECIFICATION AND INSTALLATION (TYPICAL)	09/08/00	NONE
	DRAWING NUMBER	
	SP-SN	

A SNOUT OIL-WATER DEBRIS SEPARATOR

SCALE: N.T.S.

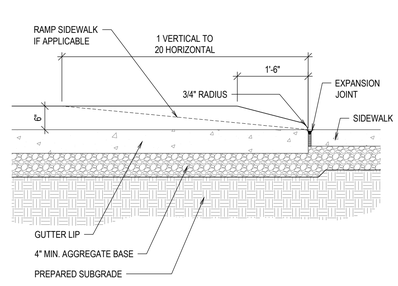

SECTION

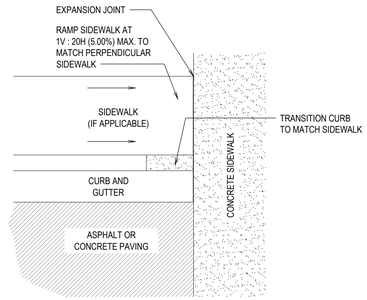

PLAN

J CURB TRANSITION

SCALE: N.T.S.

bhd ARCHITECTS
www.bhdarchitects.com
Phone 801.571.0010
Fax 801.571.0303
Toll Free 888.571.0010
65 East Wadsworth Park Drive
Suite 205 Draper, Utah 84020

PROFESSIONAL ENGINEER
08-15-24
No. 14088925-2202
DANIEL J. CANNING
STATE OF UTAH

THE CHURCH OF
JESUS CHRIST
OF LATTER-DAY SAINTS

Springwater 9
Vineyard UT Springwater Stake

Approx. 542 South Geneva Road
Vineyard, Utah 84059

Owner #: 502-2004
Plan Series: G300-MH-11
County Parcel: 39:228:0001
BHD #: 2346
Date: 15 Aug 2024

Drawing Issue and Revision Schedule

#	Date	Description
1	15 Aug 2024	Bid Documents

Civil Details

C531

Printed: 15 Aug 2024 12:56 PM

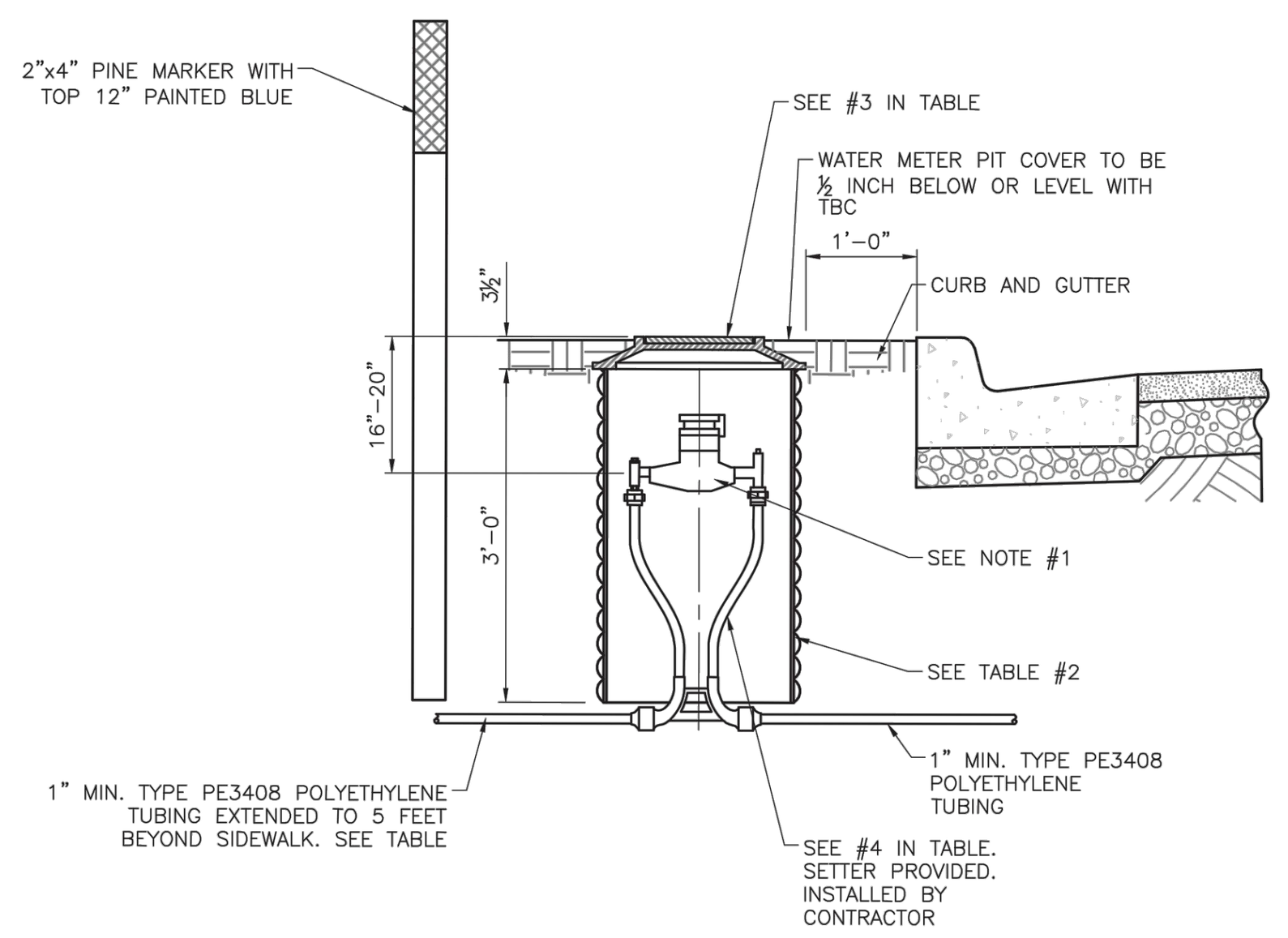

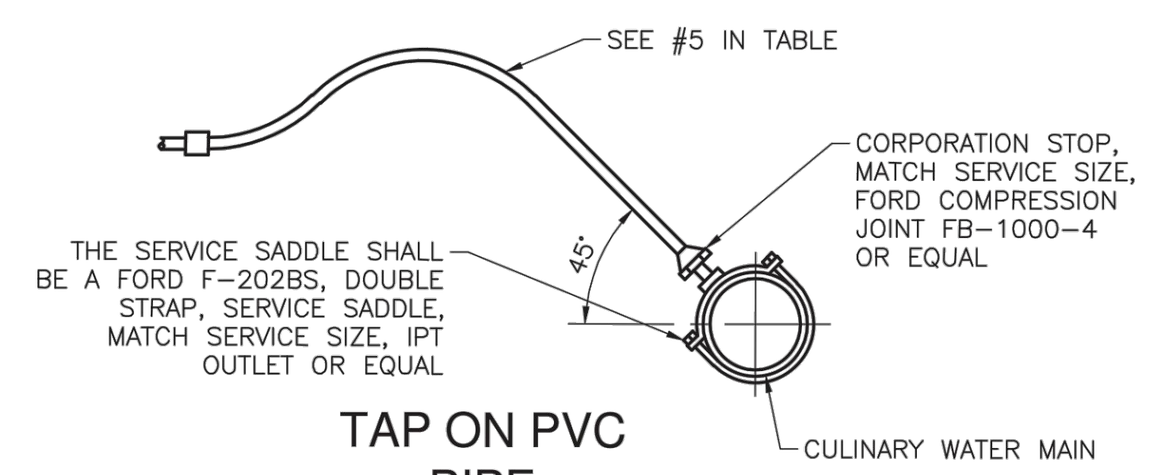

TAP ON PVC PIPE

NOTES:
1. ¾" – 1" METERS PROVIDED AND INSTALLED BY CITY.
   1½" – 2" METERS PROVIDED BY CITY, INSTALLED BY CONTRACTOR.
2. WATER SERVICE TO BE LOCATED PER APPROVED UTILITY PLAN.
3. ALL CONNECTIONS SHALL BE MADE USING PACK JOINTS (COMPRESSION) TYPE FITTINGS WITH INSERTS.
4. NO. 14 GAUGE COPPER TRACER WIRE REQUIRED, ATTACHED TO WIRE AT MAIN AND EXTENDED INTO METER BOX.
5. WATER METER TO BE LOCATED 2' MIN. FROM DRIVEWAYS.

TABLE

	1	2	3	4	5
METER SIZE	BADGER METER MODEL	METER BOX SIZE, ADS/HDPE WHITE	LID D&L FOUNDRY 2" HOLE *	FORD COPPERSETTERS PART # *	
¾"	M-25	21" x 36"	L-2244	VBHC7318W4444QNL	1" POLY
1"	M-70	21" x 36"	L-2244	VBHC7418W4444QNL	1" POLY
1½"	M-120	30" DIA. x 30" DEEP	B-5076 w/ PICK HOLE	VBH76181166NL	1½" POLY
2"	M-170	30" DIA. x 30" DEEP	B-5076 w/ PICK HOLE	VBH77181177NL	2" POLY

* OR EQUIVALENT UPON APPROVAL BY TOWN/CITY

JUB

STATEMENT OF USE
THIS DOCUMENT AND ANY ILLUSTRATIONS HEREON ARE PROVIDED AS STANDARD CONSTRUCTION DETAILS WITHIN THE TOWN OF VINEYARD. DEVEATION FROM THIS DOCUMENT REQUIRES APPROVAL FROM THE TOWN OF VINEYARD. THE TOWN OF VINEYARD CORPORATION CAN NOT BE HELD LIABLE FOR MISUSE OR CHANGES REGARDING THIS DOCUMENT.

REVISION

NO.	DESCRIPTION	BY	APR.	DATE
1	STANDARDS UPDATE	JMM	DEO	8/08/16
2				
3				
4				

VINEYARD STAY CONNECTED

TYPICAL CULINARY WATER CONNECTION

TOWN OF VINEYARD

STANDARD DRAWING NUMBER: 19
CAD DWG: V_STD_DWGS
PLOT SCALE: 1.000
DRAWN BY: JMM
DESIGN BY: CRW
CHECKED BY: DEO
ADOPTED DATE: SEPTEMBER 1, 2016

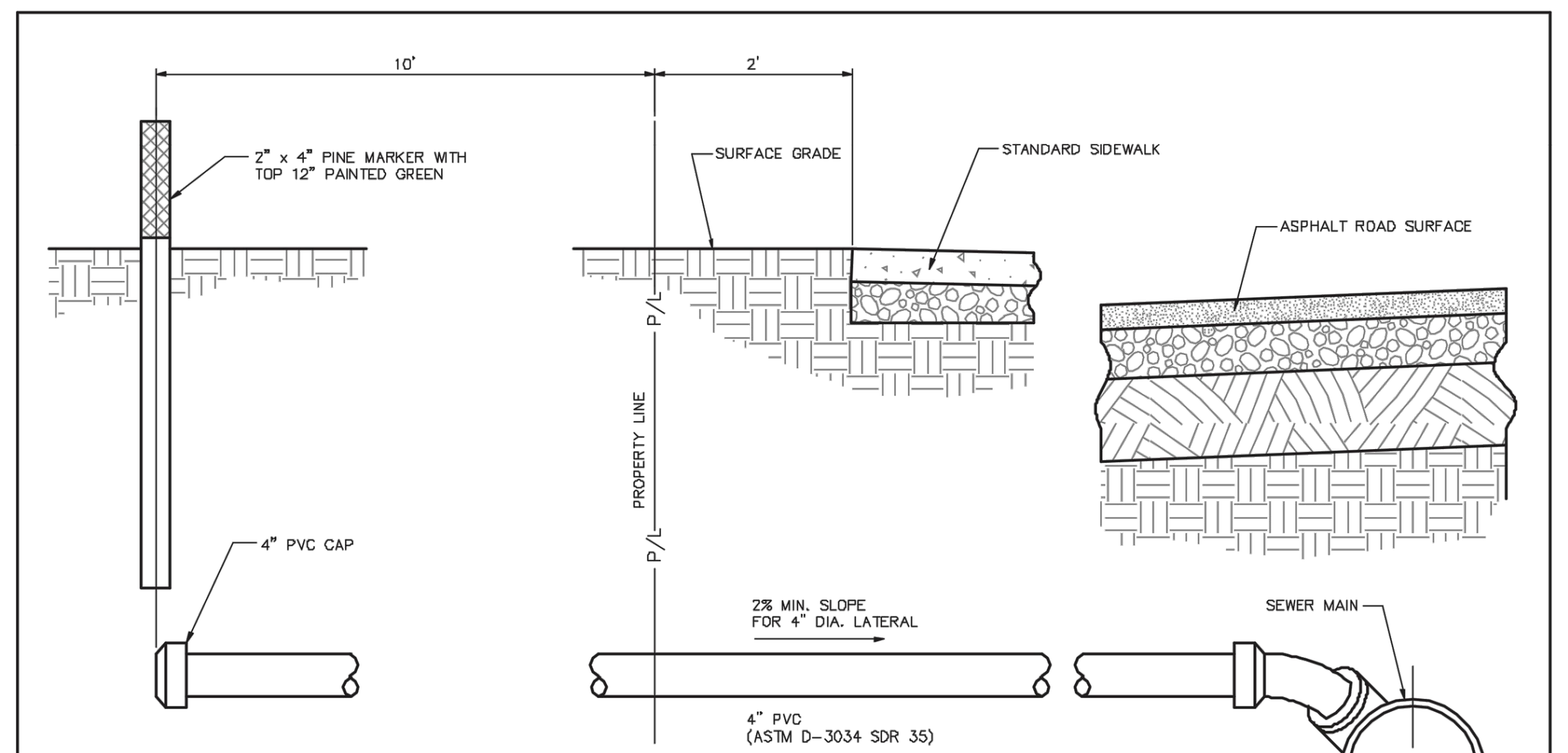

STUB FOR NEW CONSTRUCTION

NOTES FOR CONNECTING TO NEW SEWER MAIN:
1. CONNECTION TO MAIN SHALL BE BY WYE'S OR TEE'S INSTALLED AS PART OF THE SEWER MAIN CONSTRUCTION.
2. LOCATION OF STUB TO BE LOCATED PER APPROVED UTILITY PLAN.
3. SHOW CENTERLINE STATION OF THE LATERAL FROM THE NEAREST DOWNSTREAM MANHOLE. USE SAME STATIONING USED FOR SEWER MAIN.
4. TRAFFIC RATED CLEANOUT LID REQ'D IF LOCATED IN TRAFFIC AREAS.

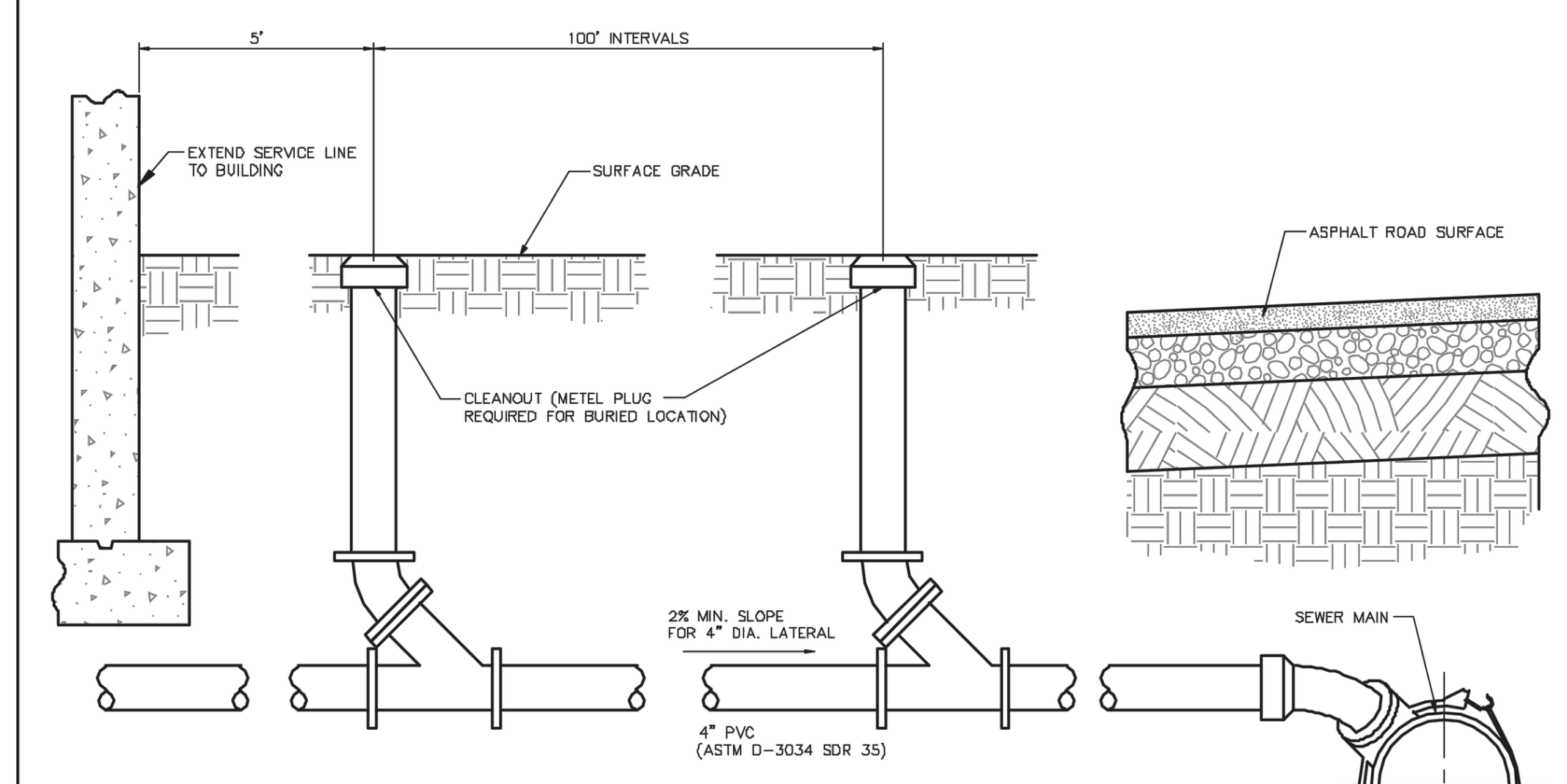

TIE TO EXISTING CONSTRUCTION

NOTES FOR CONNECTING TO EXISTING SEWER MAIN:
1. CONNECTION TO BE MADE IN PRESENCE OF PUBLIC WORKS INSPECTOR.
2. INSERTA-TEE OR EQUAL INSTALLED PER MANUFACTURER RECOMMENDATIONS.
3. TRAFFIC RATED CLEANOUT LID REQ'D IF LOCATED IN TRAFFIC AREAS.

JUB

STATEMENT OF USE
THIS DOCUMENT AND ANY ILLUSTRATIONS HEREON ARE PROVIDED AS STANDARD CONSTRUCTION DETAILS WITHIN THE TOWN OF VINEYARD. DEVEATION FROM THIS DOCUMENT REQUIRES APPROVAL FROM THE TOWN OF VINEYARD. THE TOWN OF VINEYARD CORPORATION CAN NOT BE HELD LIABLE FOR MISUSE OR CHANGES REGARDING THIS DOCUMENT.

REVISION

NO.	DESCRIPTION	BY	APR.	DATE
1	STANDARDS UPDATE	JMM	DEO	8/08/16
2				
3				
4				

VINEYARD STAY CONNECTED

TYPICAL SEWER LATERAL

TOWN OF VINEYARD

STANDARD DRAWING NUMBER: 20
CAD DWG: V_STD_DWGS
PLOT SCALE: 1.000
DRAWN BY: JMM
DESIGN BY: CRW
CHECKED BY: DEO
ADOPTED DATE: SEPTEMBER 1, 2016

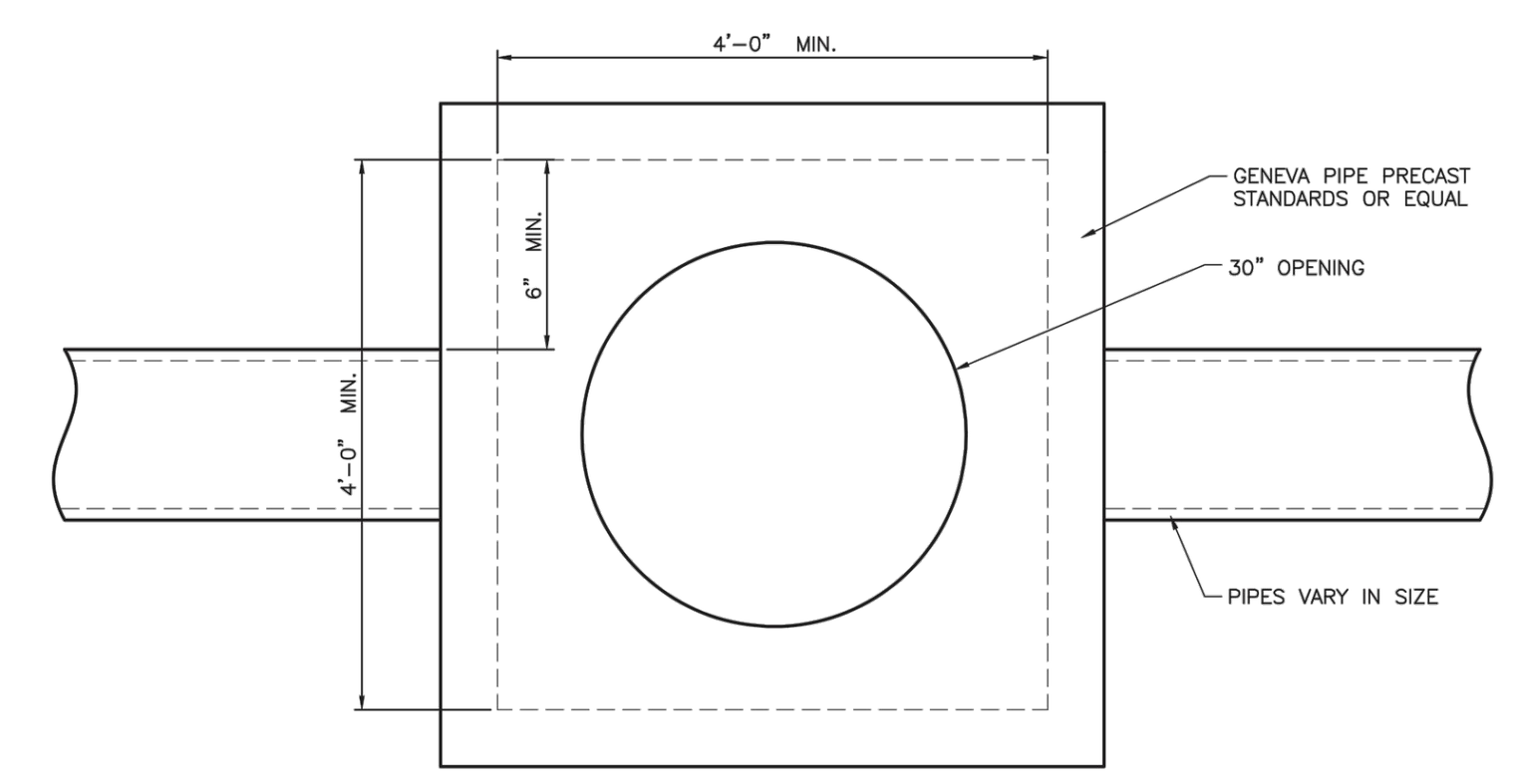

PLAN VIEW

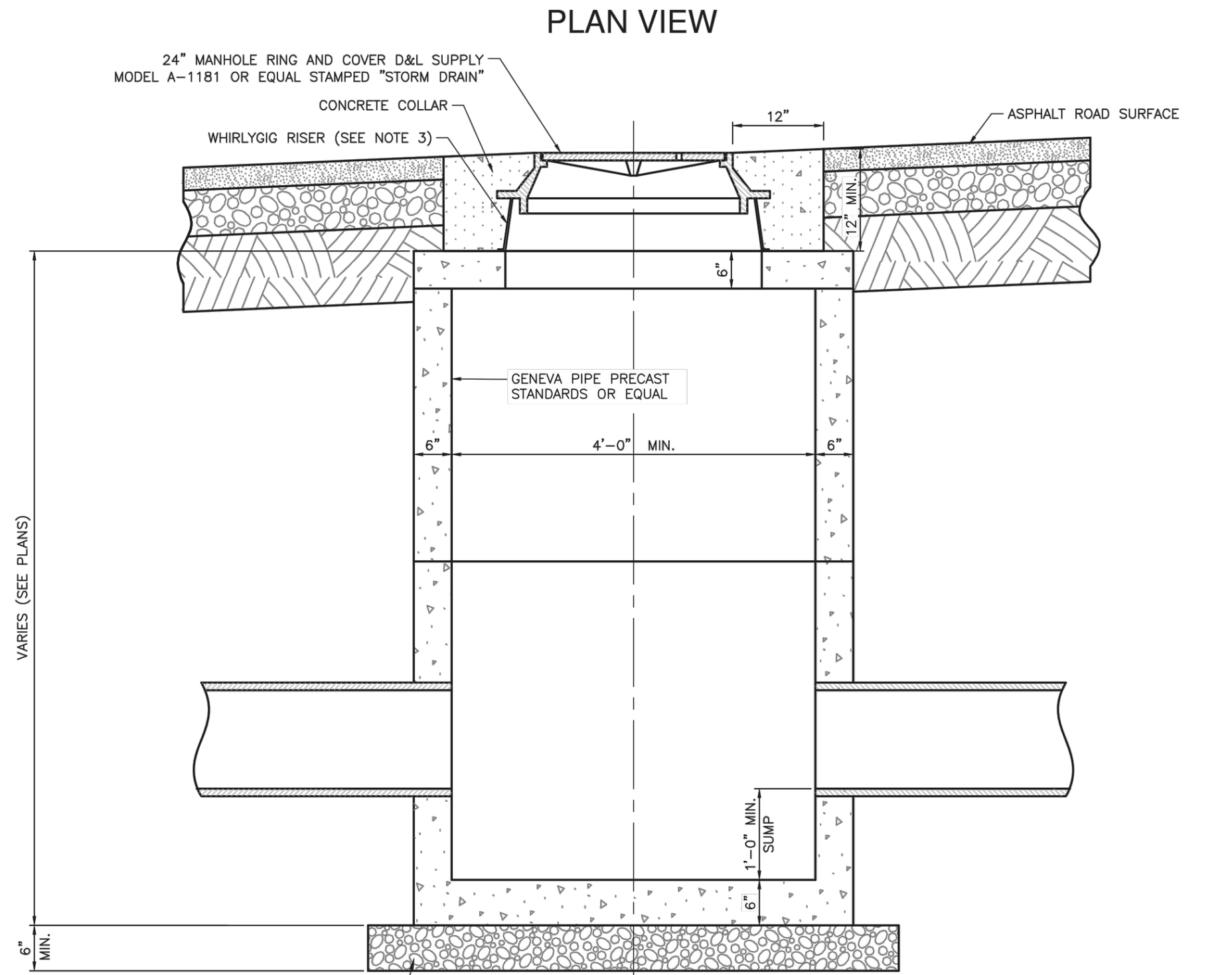

1½" MINUS MIN. GRAVEL FOUNDATION OUTSIDE SHAPE MAY BE IRREGULAR. MAXIMUM THICKNESS WILL DEPEND ON SPECIFIC SITE CONDITIONS.

ELEVATION SECTION

NOTES:
1. MANHOLE COVER TO BE A SOLID LID CONTAINING ONE PICK HOLE. SEE SPECIFICATION DIVISION 5 FOR COVER LABEL. D&L SUPPLY P/N A-1181 (OR EQUAL).
2. FLAT LIDS SHALL MEET H20 LIVE LOADING. NO FLAT RING AND COVERS WILL BE ALLOWED UNLESS APPROVED BY TOWN ENGINEER.
3. WHIRLYGIG RISER OR EQUAL SHALL BE USED INSTEAD OF GRADE RINGS TO ADJUST MANHOLE RING AND COVER TO GRADE.
4. 18" MAXIMUM WHIRLYGIG RISER HEIGHT.

JUB

STATEMENT OF USE
THIS DOCUMENT AND ANY ILLUSTRATIONS HEREON ARE PROVIDED AS STANDARD CONSTRUCTION DETAILS WITHIN THE TOWN OF VINEYARD. DEVEATION FROM THIS DOCUMENT REQUIRES APPROVAL FROM THE TOWN OF VINEYARD. THE TOWN OF VINEYARD CORPORATION CAN NOT BE HELD LIABLE FOR MISUSE OR CHANGES REGARDING THIS DOCUMENT.

REVISION

NO.	DESCRIPTION	BY	APR.	DATE
1	STANDARDS UPDATE	JMM	DEO	1/11/17
2				
3				
4				

VINEYARD STAY CONNECTED

STORM DRAIN JUNCTION BOX DETAIL

TOWN OF VINEYARD

STANDARD DRAWING NUMBER: 9A
CAD DWG: V_STD_DWGS
PLOT SCALE: 1.000
DRAWN BY: JMM
DESIGN BY: CRW
CHECKED BY: DEO
ADOPTED DATE: SEPTEMBER 1, 2016

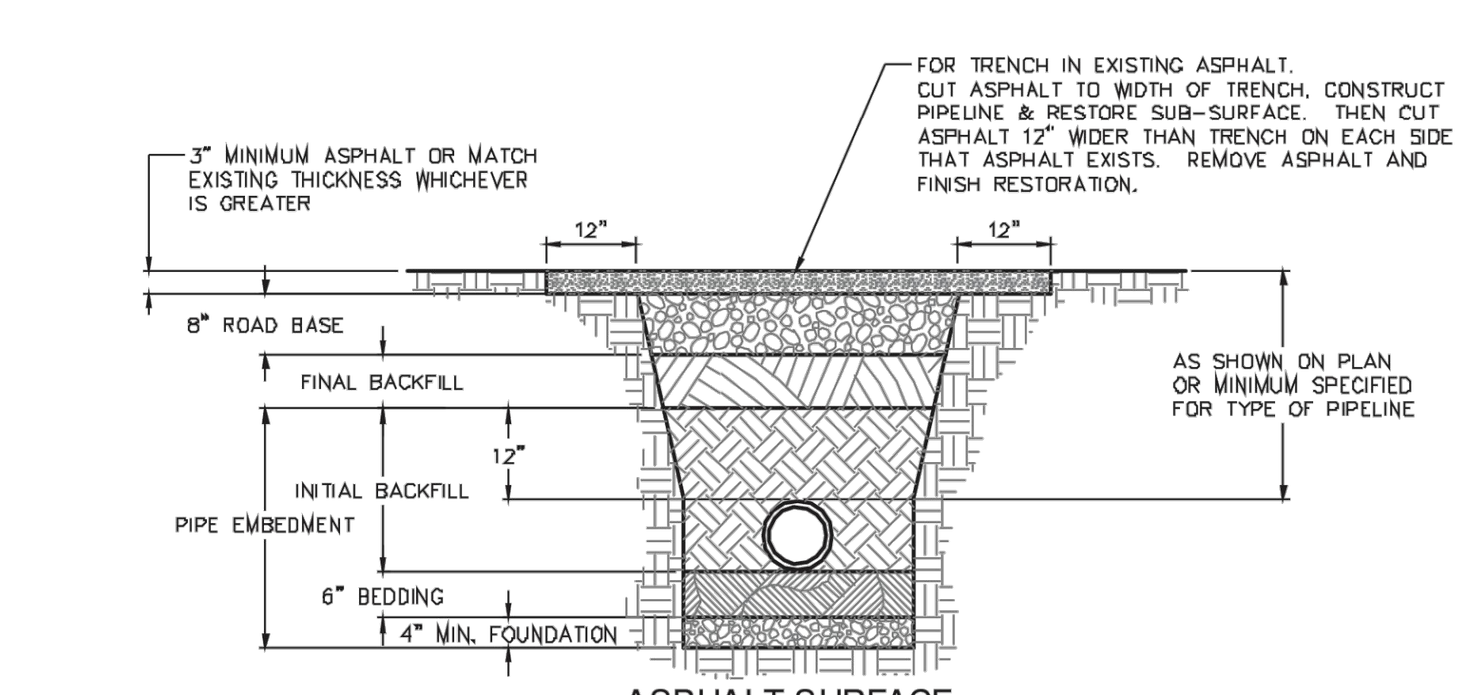

ASPHALT SURFACE

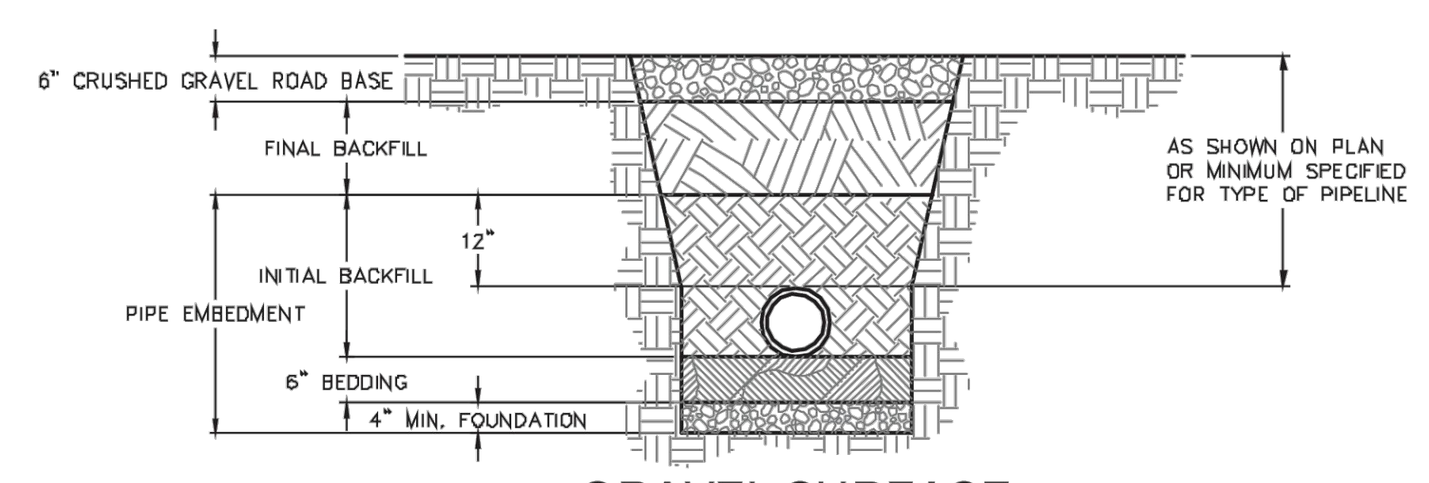

GRAVEL SURFACE

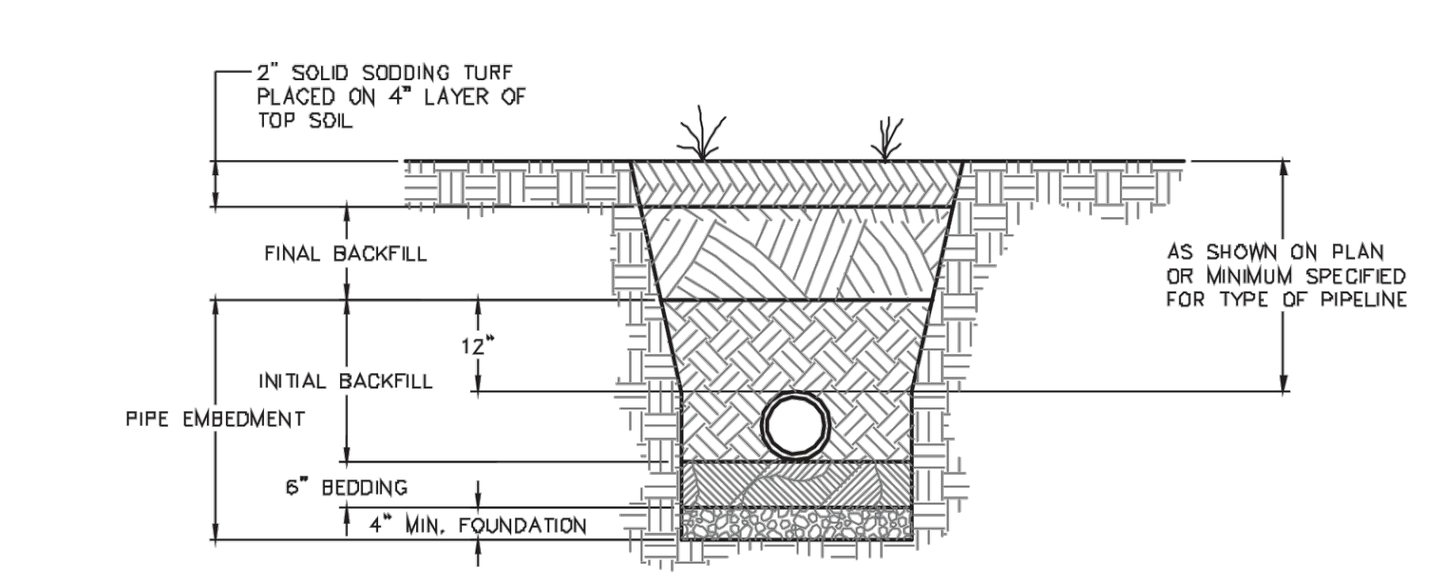

TURF SURFACE

NOTES:
1. SLOPE TRENCH TO MEET OSHA REQUIREMENTS (LATEST EDITION) OR USE TRENCH BOX.
2. FOUNDATION AND BEDDING MATERIAL AS REQUIRED.
3. INSTALL PIPELINES ON STABLE FOUNDATION WITH UNIFORM BEARING FOR FULL LENGTH OF BARREL, EXCAVATE IN BEDDING FOR ALL PIPE JOINTS.
4. NO PATCHES WITHIN EXISTING PATCHES.

JUB

STATEMENT OF USE
THIS DOCUMENT AND ANY ILLUSTRATIONS HEREON ARE PROVIDED AS STANDARD CONSTRUCTION DETAILS WITHIN THE TOWN OF VINEYARD. DEVEATION FROM THIS DOCUMENT REQUIRES APPROVAL FROM THE TOWN OF VINEYARD. THE TOWN OF VINEYARD CORPORATION CAN NOT BE HELD LIABLE FOR MISUSE OR CHANGES REGARDING THIS DOCUMENT.

REVISION

NO.	DESCRIPTION	BY	APR.	DATE
1	STANDARDS UPDATE	JMM	DEO	8/08/16
2				
3				
4				

VINEYARD STAY CONNECTED

TYPICAL TRENCH SECTION

TOWN OF VINEYARD

STANDARD DRAWING NUMBER: 13
CAD DWG: V_STD_DWGS
PLOT SCALE: 1.000
DRAWN BY: JMM
DESIGN BY: CRW
CHECKED BY: DEO
ADOPTED DATE: SEPTEMBER 1, 2016

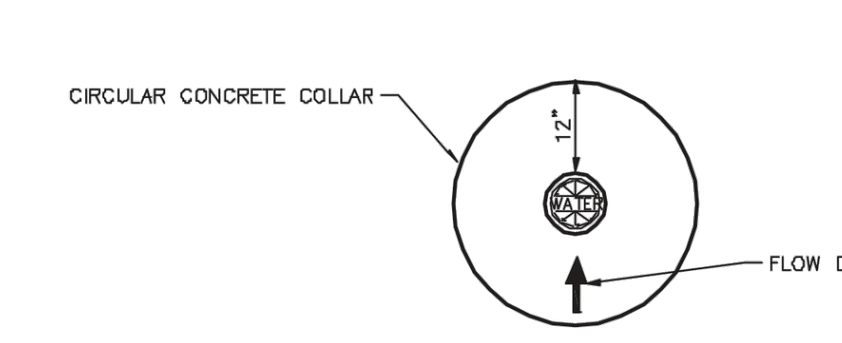

CULINARY WATER VALVE CONCRETE COLLAR

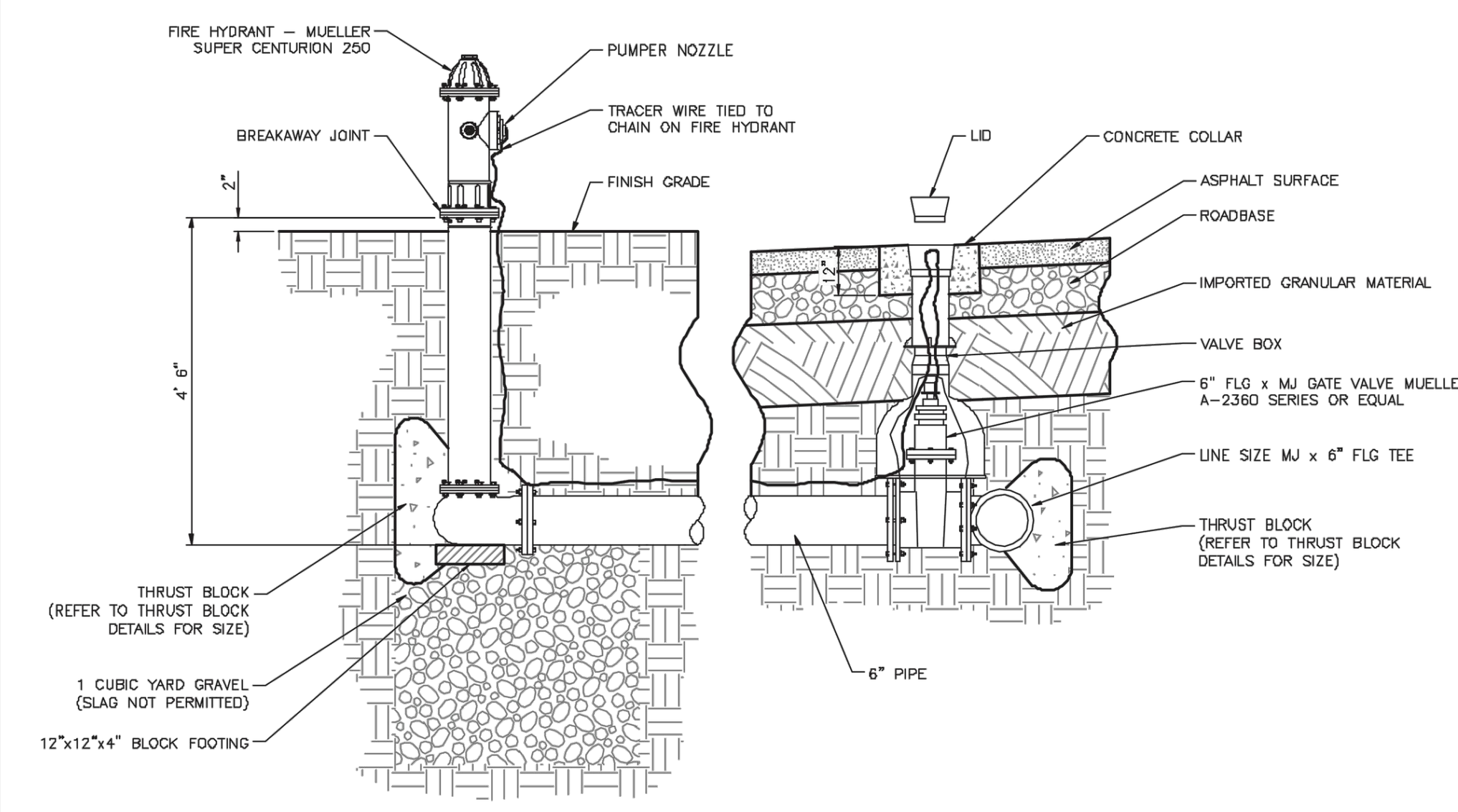

FIRE HYDRANT & WATER VALVE

NOTES:
1. BOLTS: APPLY ONE (1) COAT OF FM2 GREASE (FOOD GRADE) TO ALL EXPOSED SURFACES OF BOLTS AND TO ALL BOLT THREADS AFTER INSTALLATION OF PIPING, FITTINGS, VALVES, AND COUPLINGS.
2. VALVES, FITTINGS, CONNECTIONS, ETC.: ENCASE ALL BURIED DUCTILE IRON VALVES, FITTINGS, CONNECTIONS AND SPECIALTIES IN MINIMUM 8 MIL. BLACK POLYETHYLENE SHEETS IN ACCORDANCE WITH AWWA C-105. SECURE POLYETHYLENE SHEETS TO THE PIPE AS SPECIFIED ABOVE.
3. DUCTILE IRON PIPE: ENCASE BURIED DUCTILE IRON PIPE IN MINIMUM 8 MIL. POLYETHYLENE SHEETS IN ACCORDANCE WITH AWWA C105 IN ALL AREAS AND SOIL TYPES AS SHOWN ON THE PROJECT PLANS OR AS SPECIFIED BY THE ENGINEER.
4. NO RISER KITS SHALL BE INSTALLED ABOVE FINISHED GRADE.

JUB

STATEMENT OF USE
THIS DOCUMENT AND ANY ILLUSTRATIONS HEREON ARE PROVIDED AS STANDARD CONSTRUCTION DETAILS WITHIN THE TOWN OF VINEYARD. DEVEATION FROM THIS DOCUMENT REQUIRES APPROVAL FROM THE TOWN OF VINEYARD. THE TOWN OF VINEYARD CORPORATION CAN NOT BE HELD LIABLE FOR MISUSE OR CHANGES REGARDING THIS DOCUMENT.

REVISION

NO.	DESCRIPTION	BY	APR.	DATE
1	STANDARDS UPDATE	JMM	DEO	8/08/16
2				
3				
4				

VINEYARD STAY CONNECTED

FIRE HYDRANT AND WATER VALVE DETAIL

TOWN OF VINEYARD

STANDARD DRAWING NUMBER: 17
CAD DWG: V_STD_DWGS
PLOT SCALE: 1.000
DRAWN BY: JMM
DESIGN BY: CRW
CHECKED BY: DEO
ADOPTED DATE: SEPTEMBER 1, 2016

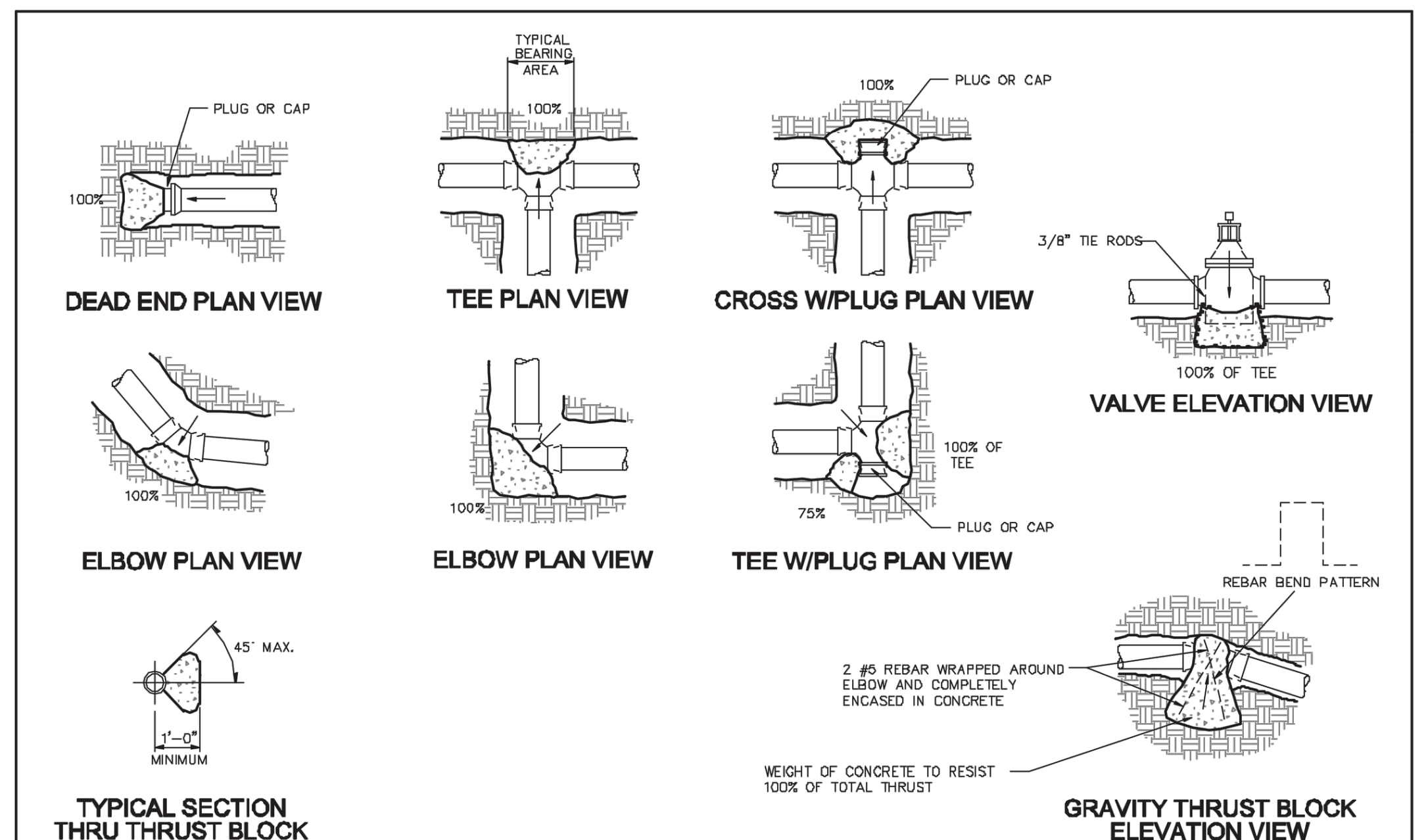

NOTES:
1. THE FIGURE (100%) AT THE THRUST BLOCK INDICATES PER CENT OF TOTAL THRUST TO BE APPLIED FOR BEARING AREA.
2. THE ARROW (———►) INDICATES THRUST DIRECTION.
3. CONCRETE FOR THRUST BLOCKS TO BE 3000 P.S.I. .
4. ALL MJ AND FLANGED FITTINGS TO BE WRAPPED WITH 8 MIL POLYETHYLENE PRIOR TO PLACING CONCRETE THRUST BLOCK
5. WHERE SUFFICIENT BEARING SURFACE IS NOT AVAILABLE FOR THRUST BLOCK, MEGALUG THRUST RESTRAINING GLANDS MAY BE USED. MEGALUG THRUST RESTRAINING GLANDS SHALL BE INSTALLED PER MANUFACTURER'S RECOMENDATION INCLUDING ANY JOINT RESTRAINT. ANY USE OF MEGALUG OR CHANGE TO THE THRUST BEARING CHART MUST BE REVIEWED BY THE ENGINEER.
6. MEGALUGS OR EQUAL REQ'D AT ALL FITTING TO PIPE JOINTS.

TABLE 1

USE WHEN LINE PRESSURE AND SOIL BEARING STRENGTH ARE KNOWN.

LINE PRESSURE: psi
TEST PRESSURE (sf = 1.5): psi
SOIL BEARING STRENGTH: psf
(SOIL BEARING STRENGTH DETERMINED FROM A GEOTECHNICAL INVESTIGATION.)

SIDE THRUST (lbs.) PER 1 PSI LINE PRESSURE

PIPE SIZE (")	PIPE AREA (sq. in.)	DEAD END OR TEE (lbs.)	90° BEND (lbs.)	45° BEND (lbs.)	22.5° BEND (lbs.)	11.25° BEND (lbs.)
4	14.39	22	31	17	9	5
6	31.17	49	69	37	19	10
8	56.88	86	121	66	34	17
10	86.92	131	185	100	51	26
12	124.29	187	264	143	73	37
14	168.33	253	358	194	99	50
16	219.56	330	466	253	129	65
18	277.59	417	589	319	163	82
20	342.41	514	727	394	201	101
24	490.09	736	1040	563	287	145
30	757.69	1137	1608	870	444	223

TABLE 2

USE WHEN LINE PRESSURE AND SOIL BEARING STRENGTH ARE NOT KNOWN.

LINE PRESSURE: 120 psi
TEST PRESSURE (sf = 1.5): 180 psi
SOIL BEARING STRENGTH: 1,500 psi

AREA OF BEARING REQUIRED (sq. ft.)

PIPE SIZE (")	PIPE AREA (sq. in.)	DEAD END OR TEE (lbs.)	90° BEND (lbs.)	45° BEND (lbs.)	22.5° BEND (lbs.)	11.25° BEND (lbs.)
4	14.39	1.7	2.4	1.3	0.7	0.3
6	31.17	3.9	5.5	3.0	1.5	0.8
8	56.88	6.8	9.7	5.2	2.7	1.3
10	86.92	10.4	14.8	8.0	4.1	2.0
12	124.29	14.9	21.1	11.4	5.8	2.9
14	168.33	20.2	28.6	15.5	7.9	4.0
16	219.56	26.3	37.3	20.2	10.3	5.2
18	277.59	33.3	47.1	25.5	13.0	6.5
20	342.41	41.1	58.1	31.4	16.0	8.1
24	490.09	58.8	83.2	45.0	22.0	11.6
30	757.69	90.9	128.6	69.6	35.5	17.8

EXAMPLE FOR TABLE 1:
8-INCH 90° BEND
LINE PRESSURE = 100 psi
FROM TABLE: THRUST PER 1 psi =121 lbs.
CALCULATE TOTAL THRUST: 100 psi x 121 lbs/psi = 12,100 lbs
SOIL BEARING STRENGTH = 2,000 psf
AREA OF BEARING REQUIRED FOR THRUST BLOCK IS 6.1 sq. ft. (12,100 lbs / 2,000 psf = 6.1 sf. ft.)

* PIPE AREA IS BASED ON LARGEST ACTUAL INSIDE DIAMETER OF DUCTILE IRON PIPE.

JUB

STATEMENT OF USE
THIS DOCUMENT AND ANY ILLUSTRATIONS HEREON ARE PROVIDED AS STANDARD CONSTRUCTION DETAILS WITHIN THE TOWN OF VINEYARD. DEVEATION FROM THIS DOCUMENT REQUIRES APPROVAL FROM THE TOWN OF VINEYARD. THE TOWN OF VINEYARD CORPORATION CAN NOT BE HELD LIABLE FOR MISUSE OR CHANGES REGARDING THIS DOCUMENT.

REVISION

NO.	DESCRIPTION	BY	APR.	DATE
1	STANDARDS UPDATE	JMM	DEO	8/08/16
2				
3				
4				

VINEYARD STAY CONNECTED

THRUST BLOCK DETAILS

TOWN OF VINEYARD

STANDARD DRAWING NUMBER: 18
CAD DWG: V_STD_DWGS
PLOT SCALE: 1.000
DRAWN BY: JMM
DESIGN BY: CRW
CHECKED BY: DEO
ADOPTED DATE: SEPTEMBER 1, 2016

bhd ARCHITECTS
www.bhdarchitects.com
Phone 801.571.0010
Fax 801.571.0303
Toll Free 888.571.0010
65 East Wadsworth Park Drive
Suite 205 Draper, Utah 84020

PROFESSIONAL ENGINEER
08-15-24
No. 11088925-2202
DANIEL J. CANNING
STATE OF UTAH

THE CHURCH OF JESUS CHRIST OF LATTER-DAY SAINTS

Springwater 9
Vineyard UT Springwater Stake

Approx. 542 South Geneva Road
Vineyard, Utah 84059

Date: 15 Aug 2024
BHD #: 2346
County Parcel: 39:228:0001
Plan Series: G300-MH-11
Owner #: 502-2004

Drawing Issue and Revision Schedule

#	Date	Description
1	15 Aug 2024	Bid Documents

Civil Details

C541

Printed: 15 Aug 2024 12:56 PM

PROPOSED LAYOUT		CONCEPTUAL ELEVATIONS:	
63	STORMTECH MC-3500 CHAMBERS	MAXIMUM ALLOWABLE GRADE (TOP OF PAVEMENT/UNPAVED):	12.50
12	STORMTECH MC-3500 END CAPS	MINIMUM ALLOWABLE GRADE (UNPAVED WITH TRAFFIC):	6.50
12	STONE ABOVE (in)	MINIMUM ALLOWABLE GRADE (UNPAVED NO TRAFFIC):	6.00
9	STONE BELOW (in)	MINIMUM ALLOWABLE GRADE (TOP OF RIGID CONCRETE PAVEMENT):	6.00
40	STONE VOID	MINIMUM ALLOWABLE GRADE (BASE OF FLEXIBLE PAVEMENT):	6.00
12466	INSTALLED SYSTEM VOLUME (CF) (PERIMETER STONE INCLUDED) (COVER STONE INCLUDED) (BASE STONE INCLUDED)	TOP OF STONE:	5.50
		TOP OF MC-3500 CHAMBER:	4.50
		24" ISOLATOR ROW PLUS INVERT:	0.92
		18" x 18" BOTTOM MANIFOLD INVERT:	0.92
3728	SYSTEM AREA (SF)	18" x 18" BOTTOM MANIFOLD INVERT:	0.90
372.9	SYSTEM PERIMETER (ft)	18" BOTTOM CONNECTION INVERT:	0.90
698	THERMOPLASTIC LINER (SY) (20% OVERAGE)	BOTTOM OF MC-3500 CHAMBER:	0.75
		UNDERDRAIN INVERT:	0.00
		BOTTOM OF STONE:	0.00

PART TYPE	ITEM ON LAYOUT	DESCRIPTION	*INVERT*	MAX FLOW
PREFABRICATED END CAP	A	24" BOTTOM CORED END CAP, PART#: MC3500IEPP24BC / TYP OF ALL 24" BOTTOM CONNECTIONS AND ISOLATOR PLUS ROWS	2.08"	
PREFABRICATED END CAP	B	18" BOTTOM CORED END CAP, PART#: MC3500IEPP18BC / TYP OF ALL 18" BOTTOM CONNECTIONS	1.77"	
LAMP	C	INSTALL FLAMP ON 24" ACCESS PIPE / PART#: MCFLAMP		
MANIFOLD	D	18" x 18" BOTTOM MANIFOLD, ADS N-12	1.77"	
MANIFOLD	E	18" x 18" BOTTOM MANIFOLD, ADS N-12	1.77"	
PIPE CONNECTION	F	18" BOTTOM CONNECTION	1.77"	
CONCRETE STRUCTURE	G	OCS (DESIGN BY ENGINEER / PROVIDED BY OTHERS)		8.0 CFS OUT
CONCRETE STRUCTURE W/WEIR	H	(DESIGN BY ENGINEER / PROVIDED BY OTHERS)		20.9 CFS IN
UNDERDRAIN	I	6" ADS N-12 DUAL WALL PERFORATED HDPE UNDERDRAIN		

*INVERT ABOVE BASE OF CHAMBER

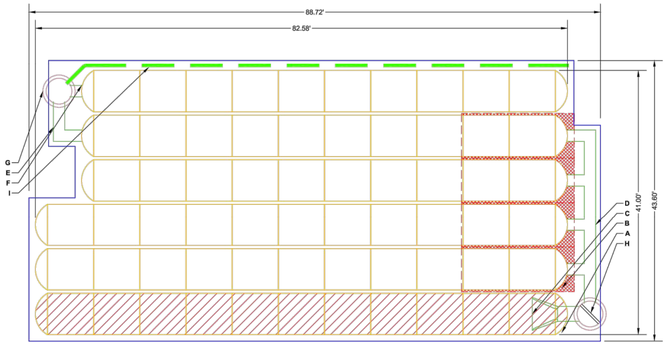

ISOLATOR ROW PLUS (SEE DETAIL)

PLACE MINIMUM 17.50' OF ADSPLUS125 WOVEN GEOTEXTILE OVER BEDDING STONE AND UNDERNEATH CHAMBER FEET FOR SCOUR PROTECTION AT ALL CHAMBER INLET ROWS

THERMOPLASTIC LINER (SEE TECH NOTE #6.50 PROVIDED BY OTHERS / DESIGN BY OTHERS)

NOTES

- MANIFOLD SIZE TO BE DETERMINED BY SITE DESIGN ENGINEER. SEE TECH NOTE #6.32 FOR MANIFOLD SIZING GUIDANCE.
- DUE TO THE ADAPTATION OF THIS CHAMBER SYSTEM TO SPECIFIC SITE AND DESIGN CONSTRAINTS, IT MAY BE NECESSARY TO CUT AND COUPLE ADDITIONAL PIPE TO STANDARD MANIFOLD COMPONENTS IN THE FIELD.
- THE SITE DESIGN ENGINEER MUST REVIEW ELEVATIONS AND IF NECESSARY ADJUST GRADING TO ENSURE THE CHAMBER COVER REQUIREMENTS ARE MET.
- THIS CHAMBER SYSTEM WAS DESIGNED WITHOUT SITE-SPECIFIC INFORMATION ON SOIL CONDITIONS OR BEARING CAPACITY. THE SITE DESIGN ENGINEER IS RESPONSIBLE FOR DETERMINING THE SUITABILITY OF THE SOIL AND PROVIDING THE BEARING CAPACITY OF THE INSITU SOILS. THE BASE STONE DEPTH MAY BE INCREASED OR DECREASED ONCE THIS INFORMATION IS PROVIDED.
- ADS DOES NOT DESIGN OR PROVIDE MEMBRANE LINER SYSTEMS FOR CISTERNS (RAINWATER HARVESTING). TO MINIMIZE THE LEAKAGE POTENTIAL OF LINER SYSTEMS, THE MEMBRANE LINER SYSTEM SHOULD BE DESIGNED BY A KNOWLEDGEABLE GEOTEXTILE PROFESSIONAL AND INSTALLED BY A QUALIFIED CONTRACTOR.
- **NOT FOR CONSTRUCTION:** THIS LAYOUT IS FOR DIMENSIONAL PURPOSES ONLY TO PROVE CONCEPT & THE REQUIRED STORAGE VOLUME CAN BE ACHIEVED ON SITE.

SPACE INTENTIONALLY LEFT BLANK

3 MC-3500 ISOLATOR ROW PLUS DETAIL

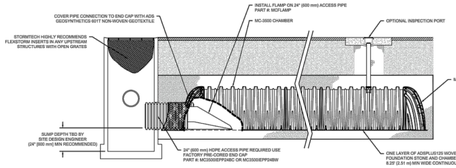

MC-3500 ISOLATOR ROW PLUS DETAIL
NTS

INSPECTION & MAINTENANCE

STEP 1) INSPECT ISOLATOR ROW PLUS FOR SEDIMENT
- A. INSPECTION PORTS (IF PRESENT)
  - A.1. REMOVE/OPEN LID ON NYLOPLAST INLINE DRAIN
  - A.2. REMOVE AND CLEAN FLEXSTORM FILTER IF INSTALLED
  - A.3. USING A FLASHLIGHT AND STADIA ROD, MEASURE DEPTH OF SEDIMENT AND RECORD ON MAINTENANCE LOG
  - A.4. LOWER A CAMERA INTO ISOLATOR ROW PLUS FOR VISUAL INSPECTION OF SEDIMENT LEVELS (OPTIONAL)
  - A.5. IF SEDIMENT IS AT, OR ABOVE, 3" (80 mm) PROCEED TO STEP 2. IF NOT, PROCEED TO STEP 3.
- B. ALL ISOLATOR PLUS ROWS
  - B.1. REMOVE COVER FROM STRUCTURE AT UPSTREAM END OF ISOLATOR ROW PLUS
  - B.2. USING A FLASHLIGHT, INSPECT DOWN THE ISOLATOR ROW PLUS THROUGH OUTLET PIPE
    - i) MIRRORS ON POLES OR CAMERAS MAY BE USED TO AVOID A CONFINED SPACE ENTRY
    - ii) FOLLOW OSHA REGULATIONS FOR CONFINED SPACE ENTRY IF ENTERING MANHOLE
  - B.3. IF SEDIMENT IS AT, OR ABOVE, 3" (80 mm) PROCEED TO STEP 2. IF NOT, PROCEED TO STEP 3.

STEP 2) CLEAN OUT ISOLATOR ROW PLUS USING THE JETVAC PROCESS
- A. A FIXED CULVERT CLEANING NOZZLE WITH REAR FACING SPREAD OF 45° (1.1 m) OR MORE IS PREFERRED
- B. APPLY MULTIPLE PASSES OF JETVAC UNTIL BACKFLUSH WATER IS CLEAN
- C. VACUUM STRUCTURE SUMP AS REQUIRED

STEP 3) REPLACE ALL COVERS, GRATES, FILTERS, AND LIDS; RECORD OBSERVATIONS AND ACTIONS.

STEP 4) INSPECT AND CLEAN BASINS AND MANHOLES UPSTREAM OF THE STORMTECH SYSTEM.

NOTES

1. INSPECT EVERY 6 MONTHS DURING THE FIRST YEAR OF OPERATION. ADJUST THE INSPECTION INTERVAL BASED ON PREVIOUS OBSERVATIONS OF SEDIMENT ACCUMULATION AND HIGH WATER ELEVATIONS.
2. CONDUCT JETTING AND VACTORING ANNUALLY OR WHEN INSPECTION SHOWS THAT MAINTENANCE IS NECESSARY.

SPACE INTENTIONALLY LEFT BLANK

5 MC-SERIES END CAP INSERTION DETAIL

MC-SERIES END CAP INSERTION DETAIL
NTS

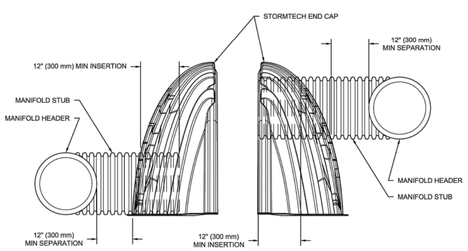

NOTE: MANIFOLD STUB MUST BE LAID HORIZONTAL FOR A PROPER FIT IN END CAP OPENING.

UNDERDRAIN DETAIL
NTS

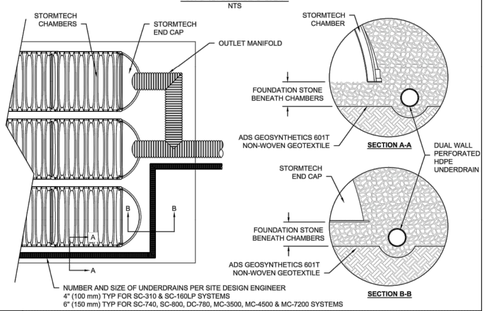

4 UNDERDRAIN DETAIL

SPACE INTENTIONALLY LEFT BLANK

MC-3500 TECHNICAL SPECIFICATION
NTS

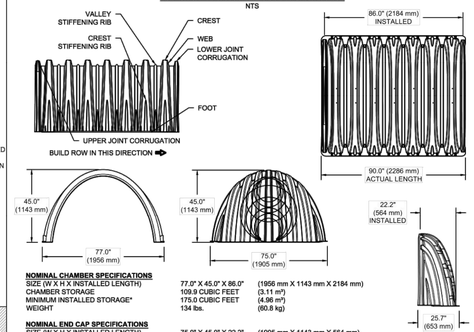

NOMINAL CHAMBER SPECIFICATIONS

SIZE (W X H X INSTALLED LENGTH)	77.0" X 45.0" X 86.0"	(1956 mm X 1143 mm X 2184 mm)
CHAMBER STORAGE	109.9 CUBIC FEET	(3.11 m³)
MINIMUM INSTALLED STORAGE*	175.0 CUBIC FEET	(4.96 m³)
WEIGHT	134 lbs.	(60.8 kg)

NOMINAL END CAP SPECIFICATIONS

SIZE (W X H X INSTALLED LENGTH)	75.0" X 45.0" X 22.2"	(1905 mm X 1143 mm X 564 mm)
END CAP STORAGE	14.9 CUBIC FEET	(0.42 m³)
MINIMUM INSTALLED STORAGE*	45.1 CUBIC FEET	(1.28 m³)
WEIGHT	49 lbs.	(22.2 kg)

*ASSUMES 12" (305 mm) STONE ABOVE, 9" (229 mm) STONE FOUNDATION, 6" SPACING BETWEEN CHAMBERS, 6" (152 mm) STONE PERIMETER IN FRONT OF END CAPS AND 40% STONE POROSITY

STUBS AT BOTTOM OF END CAP FOR PART NUMBERS ENDING WITH "B"
STUBS AT TOP OF END CAP FOR PART NUMBERS ENDING WITH "T"
END CAPS WITH A WELDED CROWN PLATE END WITH "C"
END CAPS WITH A PREFABRICATED WELDED STUB END WITH "W"

PART #	STUB	B	C
MC3500IEPP06T	6" (150 mm)	33.21" (844 mm)	---
MC3500IEPP06B		---	0.66" (17 mm)
MC3500IEPP08T	8" (200 mm)	31.16" (791 mm)	---
MC3500IEPP08B		---	0.81" (21 mm)
MC3500IEPP10T	10" (250 mm)	29.04" (738 mm)	---
MC3500IEPP10B		---	0.93" (24 mm)
MC3500IEPP12T	12" (300 mm)	26.36" (670 mm)	---
MC3500IEPP12B		---	1.35" (34 mm)
MC3500IEPP15T	15" (375 mm)	23.39" (594 mm)	---
MC3500IEPP15B		---	1.50" (38 mm)
MC3500IEPP18TC	18" (450 mm)	20.03" (509 mm)	---
MC3500IEPP18TW			
MC3500IEPP18BC		---	1.77" (45 mm)
MC3500IEPP18BW			
MC3500IEPP24TC	24" (600 mm)	14.48" (368 mm)	---
MC3500IEPP24TW			
MC3500IEPP24BC		---	2.06" (52 mm)
MC3500IEPP24BW			
MC3500IEPP30BC	30" (750 mm)	---	2.75" (70 mm)

NOTE: ALL DIMENSIONS ARE NOMINAL

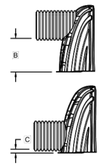

CUSTOM PRECORED INVERTS ARE AVAILABLE UPON REQUEST. INVENTORIED MANIFOLDS INCLUDE 12-24" (300-600 mm) SIZE ON SIZE AND 15-48" (375-1200 mm) ECCENTRIC MANIFOLDS. CUSTOM INVERT LOCATIONS ON THE MC-3500 END CAP CUT IN THE FIELD ARE NOT RECOMMENDED FOR PIPE SIZES GREATER THAN 10" (250 mm). THE INVERT LOCATION IN COLUMN 'B' ARE THE HIGHEST POSSIBLE FOR THE PIPE SIZE.

2 MC-3500 TECHNICAL SPECIFICATION

ACCEPTABLE FILL MATERIALS: STORMTECH MC-3500 CHAMBER SYSTEMS

	MATERIAL LOCATION	DESCRIPTION	AASHTO MATERIAL CLASSIFICATIONS	COMPACTION / DENSITY REQUIREMENT
D	**FINAL FILL:** FILL MATERIAL FOR LAYER 'D' STARTS FROM THE TOP OF THE 'C' LAYER TO THE BOTTOM OF FLEXIBLE PAVEMENT OR UNPAVED FINISHED GRADE ABOVE. NOTE THAT PAVEMENT SUBBASE MAY BE PART OF THE 'D' LAYER	ANY SOIL/ROCK MATERIALS, NATIVE SOILS, OR PER ENGINEER'S PLANS. CHECK PLANS FOR PAVEMENT SUBGRADE REQUIREMENTS.	N/A	PREPARE PER SITE DESIGN ENGINEER'S PLANS. PAVED INSTALLATIONS MAY HAVE STRINGENT MATERIAL AND PREPARATION REQUIREMENTS.
C	**INITIAL FILL:** FILL MATERIAL FOR LAYER 'C' STARTS FROM THE TOP OF THE EMBEDMENT STONE (18" LAYER) TO 24" (600 mm) ABOVE THE TOP OF THE CHAMBER. NOTE THAT PAVEMENT SUBBASE MAY BE A PART OF THE 'C' LAYER.	GRANULAR WELL-GRADED SOIL/AGGREGATE MIXTURES, <35% FINES OR PROCESSED AGGREGATE. MOST PAVEMENT SUBBASE MATERIALS CAN BE USED IN LIEU OF THIS LAYER.	AASHTO M145[1] A-1, A-2-4, A-3 OR AASHTO M43[1] 3, 357, 4, 467, 5, 56, 57, 6, 67, 68, 7, 78, 8, 89, 9, 10	BEGIN COMPACTIONS AFTER 24" (600 mm) OF MATERIAL OVER THE CHAMBERS IS REACHED. COMPACT ADDITIONAL LAYERS IN 12" (300 mm) MAX LIFTS TO A MIN. 95% PROCTOR DENSITY FOR WELL GRADED MATERIAL AND 95% RELATIVE DENSITY FOR PROCESSED AGGREGATE MATERIALS.
B	**EMBEDMENT STONE:** FILL SURROUNDING THE CHAMBERS FROM THE FOUNDATION STONE ('A' LAYER) TO THE 'C' LAYER ABOVE.	CLEAN, CRUSHED, ANGULAR STONE OR RECYCLED CONCRETE[5]	AASHTO M43[1] 3, 357, 4, 467, 5, 56, 57	NO COMPACTION REQUIRED.
A	**FOUNDATION STONE:** FILL BELOW CHAMBERS FROM THE SUBGRADE UP TO THE FOOT (BOTTOM) OF THE CHAMBER.	CLEAN, CRUSHED, ANGULAR STONE OR RECYCLED CONCRETE[5]	AASHTO M43[1] 3, 357, 4, 467, 5, 56, 57	PLATE COMPACT OR ROLL TO ACHIEVE A FLAT SURFACE.[2,3]

PLEASE NOTE:
1. THE LISTED AASHTO DESIGNATIONS ARE FOR GRADATIONS ONLY. THE STONE MUST ALSO BE CLEAN, CRUSHED, ANGULAR. FOR EXAMPLE, A SPECIFICATION FOR #4 STONE WOULD STATE: "CLEAN, CRUSHED, ANGULAR NO. 4 (AASHTO M43) STONE".
2. STORMTECH COMPACTION REQUIREMENTS ARE MET FOR 'A' LOCATION MATERIALS WHEN PLACED AND COMPACTED IN 9" (230 mm) (MAX) LIFTS USING TWO FULL COVERAGES WITH A VIBRATORY COMPACTOR.
3. WHERE INFILTRATION SURFACES MAY BE COMPROMISED BY COMPACTION, FOR STANDARD DESIGN LOAD CONDITIONS, A FLAT SURFACE MAY BE ACHIEVED BY RAKING OR DRAGGING WITHOUT COMPACTION EQUIPMENT. FOR SPECIAL LOAD DESIGNS, CONTACT STORMTECH FOR COMPACTION REQUIREMENTS.
4. ONCE LAYER 'C' IS PLACED, ANY SOIL/MATERIAL CAN BE PLACED IN LAYER 'D' UP TO THE FINISHED GRADE. MOST PAVEMENT SUBBASE SOILS CAN BE USED TO REPLACE THE MATERIAL REQUIREMENTS OF LAYER 'C' OR 'D' AT THE SITE DESIGN ENGINEER'S DISCRETION.
5. WHERE RECYCLED CONCRETE AGGREGATE IS USED IN LAYERS 'A' OR 'B' THE MATERIAL SHOULD ALSO MEET THE ACCEPTABILITY CRITERIA OUTLINED IN TECHNICAL NOTE 6.20 "RECYCLED CONCRETE STRUCTURAL BACKFILL".

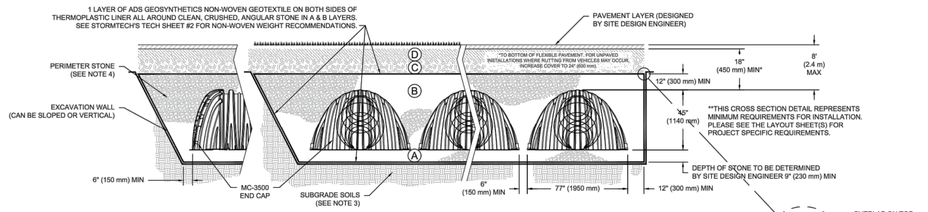

NOTES:
1. CHAMBERS SHALL MEET THE REQUIREMENTS OF ASTM F2418, "STANDARD SPECIFICATION FOR POLYPROPYLENE (PP) CORRUGATED WALL STORMWATER COLLECTION CHAMBERS" CHAMBER CLASSIFICATION 45x76 DESIGNATION SS.
2. MC-3500 CHAMBERS SHALL BE DESIGNED IN ACCORDANCE WITH ASTM F2787 "STANDARD PRACTICE FOR STRUCTURAL DESIGN OF THERMOPLASTIC CORRUGATED WALL STORMWATER COLLECTION CHAMBERS".
3. THE SITE DESIGN ENGINEER IS RESPONSIBLE FOR ASSESSING THE BEARING RESISTANCE (ALLOWABLE BEARING CAPACITY) OF THE SUBGRADE SOILS AND THE DEPTH OF FOUNDATION STONE WITH CONSIDERATION FOR THE RANGE OF EXPECTED SOIL MOISTURE CONDITIONS.
4. PERIMETER STONE MUST BE EXTENDED HORIZONTALLY TO THE EXCAVATION WALL FOR BOTH VERTICAL AND SLOPED EXCAVATION WALLS.
5. REQUIREMENTS FOR HANDLING AND INSTALLATION:
   - TO MAINTAIN THE WIDTH OF CHAMBERS DURING SHIPPING AND HANDLING, CHAMBERS SHALL HAVE INTEGRAL, INTERLOCKING STACKING LUGS.
   - TO ENSURE A SECURE JOINT DURING INSTALLATION AND BACKFILL, THE HEIGHT OF THE CHAMBER JOINT SHALL NOT BE LESS THAN 3".
   - TO ENSURE THE INTEGRITY OF THE ARCH SHAPE DURING INSTALLATION, a) THE ARCH STIFFNESS CONSTANT SHALL BE GREATER THAN OR EQUAL TO 450 LBS/FT/% THE ASC IS DEFINED IN SECTION 6.2.8 OF ASTM F2418. AND b) TO RESIST CHAMBER DEFORMATION DURING INSTALLATION AT ELEVATED TEMPERATURES (ABOVE 73° F / 23° C), CHAMBERS SHALL BE PRODUCED FROM REFLECTIVE GOLD OR YELLOW COLORS.

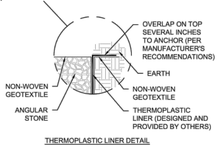

THERMOPLASTIC LINER DETAIL

1 MC-3500 CROSS SECTION DETAIL

SHEET 1 OF 1

bhd ARCHITECTS
www.bhdarchitects.com
Phone 801.571.0010
Fax 801.571.0303
Toll Free 888.571.0010
65 East Wadsworth Park Drive
Suite 205 Draper, Utah 84020

PROFESSIONAL ENGINEER 08-15-24 No. 11988925-2202 DANIEL J. CANNING STATE OF UTAH

DATE:
DRAWN: DC
CHECKED: N/A
PROJECT #:
REV:
NOT TO SCALE

THE CHURCH OF JESUS CHRIST OF LATTER-DAY SAINTS

SPRINGWATER LDS CHURCH
VINEYARD, UT, USA

StormTech® Chamber System
888-892-2894 | WWW.STORMTECH.COM

4640 TRUEMAN BLVD
HILLIARD, OH 43026
1-800-733-7473

ADS.

THIS DRAWING HAS BEEN PREPARED BASED ON INFORMATION PROVIDED TO ADS UNDER THE DIRECTION OF THE SITE DESIGN ENGINEER OR OTHER PROJECT REPRESENTATIVE. THE SITE DESIGN ENGINEER SHALL REVIEW THIS DRAWING PRIOR TO CONSTRUCTION. IT IS THE ULTIMATE RESPONSIBILITY OF THE SITE DESIGN ENGINEER TO ENSURE THAT THE PRODUCT(S) DEPICTED AND ALL ASSOCIATED DETAILS MEET ALL APPLICABLE LAWS, REGULATIONS, AND PROJECT REQUIREMENTS.

Springwater 9
Vineyard UT Springwater Stake
Approx. 542 South Geneva Road
Vineyard, Utah 84059

Owner #: 502-2004
Plan Series: C300-MH-11
County Parcel: 39:228:0001
BHD #: 2346
Date: 15 Aug 2024

Drawing Issue and Revision Schedule

#	Date	Description
1	15 Aug 2024	Bid Documents

Civil Details

C551

Printed: 15 Aug 2024 12:56 PM

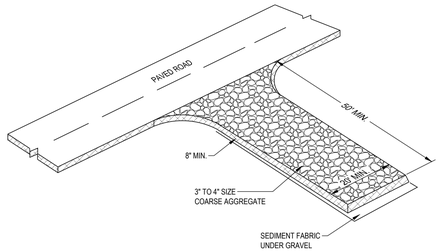

DESCRIPTION:
A STABILIZED PAD OF CRUSHED STONE LOCATED WHERE CONSTRUCTION TRAFFIC ENTERS OR LEAVES THE SITE FROM OR TO PAVED SURFACE.

APPLICATIONS:
AT ANY POINT OF INGRESS OR EGRESS AT A CONSTRUCTION SITE WHERE ADJACENT TRAVELED WAY IS PAVED. GENERALLY APPLIES TO SITES OVER 2 ACRES UNLESS SPECIAL CONDITIONS EXIST.

INSTALLATION/APPLICATION CRITERIA:
- CLEAR GRUB AREA AND GRAD TO PROVIDE MAXIMUM SLOPE OF 2%.
- COMPACT SUB GRADE AND PLACE FILTER FABRIC IF DESIRED (RECOMMENDED FOR ENTRANCES TO REMAIN FOR MORE THAN 3 MONTHS.
- PLACE COARSE AGGREGATE, 1 TO 2-1/2 INCHES IN SIZE, TO A MINIMUM DEPTH OF 8 INCHES.

LIMITATIONS:
- REQUIRES PERIODIC TOP DRESSING WITH ADDITIONAL STONES.
- SHOULD BE USED IN CONJUNCTION WITH STREET SWEEPING ON ADJACENT PUBLIC RIGHT-OF-WAY.

MAINTENANCE:
- INSPECT DAILY FOR LOSS OF GRAVEL OR SEDIMENT BUILDUP.
- INSPECT ADJACENT ROADWAY FOR SEDIMENT DEPOSIT AND CLEAN BY SWEEPING OR SHOVELING.
- REPAIR ENTRANCE AND REPLACE GRAVEL AS REQUIRED TO MAINTAIN CONTROL IN GOOD WORKING CONDITION.
- EXPAND STABILIZED AREA AS REQUIRED TO ACCOMMODATE TRAFFIC AND PREVENT EROSION AT DRIVEWAYS.

OBJECTIVES
- ※ HOUSEKEEPING PRACTICES
- □ CONTAIN WASTE
- □ MINIMIZE DISTURBED AREA
- □ STABILIZE DISTURBED AREA
- □ PROTECT SLOPES/CHANNELS
- ※ CONTROL SITE PERIMETER
- □ CONTROL INTERNAL EROSION

TARGETED POLLUTANTS
- ■ SEDIMENT
- □ NUTRIENTS
- □ TOXIC MATERIALS
- □ OIL & GREASE
- □ FLOATABLE MATERIALS
- □ OTHER WASTE

- ■ HIGH IMPACT
- ※ MEDIUM IMPACT
- □ LOW OR UNKNOWN IMPACT

IMPLEMENTATION REQUIREMENTS
- ■ CAPITAL COSTS
- ※ O & M COSTS
- ※ MAINTENANCE
- □ TRAINING

■ HIGH ※ MEDIUM □ LOW

STABILIZED CONSTRUCTION ENTRANCE C1
SCALE: N.T.S.

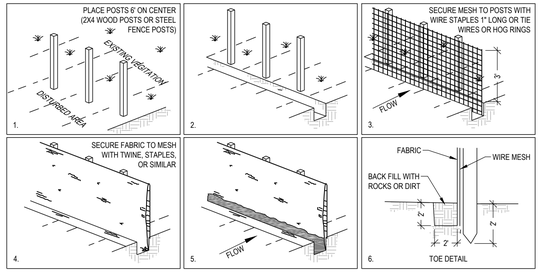

DESCRIPTION:
A TEMPORARY SEDIMENT BARRIER CONSISTING OF ENTRENCHED FILTER FABRIC STRETCHED ACROSS AND SECURED TO SUPPORTING POSTS.

APPLICATIONS:
- PERIMETER CONTROL: PLACER BARRIER AT DOWNGRADE LIMITS OF DISTURBANCE.
- SEDIMENT BARRIER: PLACE BARRIER AT TOE OF SLOPE OR SOIL STOCKPILE.
- PROTECTION OF EXISTING WATERWAYS: PLACE BARRIER AT TOP OF STREAM BANK
- INLET PROTECTION: PLACE FENCE SURROUNDING CATCH BASINS

INSTALLATION/APPLICATION CRITERIA:
- PLACE POSTS 6 FEET APART ON CENTER ALONG CONTOUR (OR USE PRE-ASSEMBLED UNIT) AND DRIVE 2 FEET MINIMUM INTO GROUND. EXCAVATE AN ANCHOR TRENCH IMMEDIATELY UPGRADIENT OF POSTS
- SECURE WIRE MESH (14 GAGE MIN. WITH 6 INCH OPENINGS) TO UPSLOPE SIDE OF POSTS. ATTACH WITH HEAVY DUTY 1 INCH LONG WIRE STAPLES, TIE WIRES OR HOG RINGS.
- CUT FABRIC TO REQUIRED WIDTH, UNROLL ALONG LENGTH OF BARRIER AND DRAPE OVER BARRIER. SECURE FABRIC TO MESH WITH TWINE, STAPLES, OR SIMILAR, WITH TRAILING EDGE EXTENDING INTO ANCHOR TRENCH.
- BACKFILL OVER FILTER FABRIC TO ANCHOR.

LIMITATIONS:
- RECOMMENDED MAXIMUM DRAINAGE AREA OF 0.5 ACRE PER 100 FEET OF FENCE.
- RECOMMENDED MAXIMUM UPGRADIENT SLOPE LENGTH OF 150 FEET.
- RECOMMENDED MAXIMUM UPHILL GRADE OF 2:1 (50%).
- RECOMMENDED MAXIMUM FLOW RATE OF 0.5 CFS.
- PONDING SHOULD NOT BE ALLOWED BEHIND FENCE.

MAINTENANCE:
- INSPECT IMMEDIATELY AFTER ANY RAINFALL AND AT LEAST DAILY DURING PROLONGED RAINFALL.
- LOOK FOR RUNOFF BYPASSING ENDS OF BARRIERS OR UNDERCUTTING BARRIERS.
- REPAIR OR REPLACE DAMAGED AREAS OF THE BARRIER AND REMOVE ACCUMULATED SEDIMENT.
- REANCHOR FENCE AS NECESSARY TO PREVENT SHORTCUTTING.
- REMOVE ACCUMULATED SEDIMENT WHEN IT REACHES 1/2 THE HEIGHT OF THE FENCE.

OBJECTIVES
- □ HOUSEKEEPING PRACTICES
- □ CONTAIN WASTE
- □ MINIMIZE DISTURBED AREA
- □ STABILIZE DISTURBED AREA
- □ PROTECT SLOPES/CHANNELS
- ※ CONTROL SITE PERIMETER
- ※ CONTROL INTERNAL EROSION

TARGETED POLLUTANTS
- ■ SEDIMENT
- □ NUTRIENTS
- □ TOXIC MATERIALS
- □ OIL & GREASE
- □ FLOATABLE MATERIALS
- □ OTHER WASTE

- ■ HIGH IMPACT
- ※ MEDIUM IMPACT
- □ LOW OR UNKNOWN IMPACT

IMPLEMENTATION REQUIREMENTS
- ※ CAPITAL COSTS
- ※ O & M COSTS
- ※ MAINTENANCE
- □ TRAINING

■ HIGH ※ MEDIUM □ LOW

SILT FENCE C3
SCALE: N.T.S.

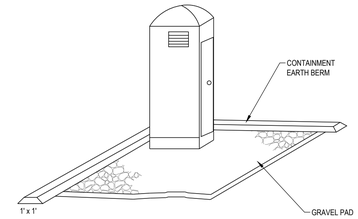

DESCRIPTION:
TEMPORARY ON-SITE SANITARY FACILITIES FOR CONSTRUCTION PERSONNEL.

APPLICATIONS:
- ALL SITES WITH NO PERMANENT SANITARY FACILITIES OR WHERE PERMANENT FACILITY IS TO FAR FROM ACTIVITIES.

INSTALLATION/APPLICATION CRITERIA:
- LOCATE PORTABLE TOILETS IN CONVENIENT LOCATIONS THROUGHOUT THE SITE.
- PREPARE LEVEL, GRAVEL SURFACE AND PROVIDE CLEAR ACCESS TO THE TOILETS FOR SERVICING AND FOR ON-SITE PERSONNEL.
- CONSTRUCT EARTH BERM PERIMETER (SEE EARTH BERM BARRIER INFORMATION SHEET), CONTROL FOR SPILL/PROTECTION LEAK.

LIMITATIONS:
- NO LIMITATIONS

MAINTENANCE:
- PORTABLE TOILETS SHOULD BE MAINTAINED IN GOOD WORKING ORDER BY LICENSED SERVICE WITH DAILY OBSERVATION FOR LEAK DETECTION.
- REGULAR WASTE COLLECTION SHOULD BE ARRANGED WITH LICENSED SERVICE.
- ALL WASTE SHOULD BE DEPOSITED IN SANITARY SEWER SYSTEM FOR TREATMENT WITH APPROPRIATE AGENCY APPROVAL.

OBJECTIVES
- □ HOUSEKEEPING PRACTICES
- ※ CONTAIN WASTE
- □ MINIMIZE DISTURBED AREA
- □ STABILIZE DISTURBED AREA
- □ PROTECT SLOPES/CHANNELS
- □ CONTROL SITE PERIMETER
- □ CONTROL INTERNAL EROSION

TARGETED POLLUTANTS
- □ SEDIMENT
- □ NUTRIENTS
- □ TOXIC MATERIALS
- □ OIL & GREASE
- □ FLOATABLE MATERIALS
- ■ OTHER WASTE

- ■ HIGH IMPACT
- ※ MEDIUM IMPACT
- □ LOW OR UNKNOWN IMPACT

IMPLEMENTATION REQUIREMENTS
- ※ CAPITAL COSTS
- ※ O & M COSTS
- ※ MAINTENANCE
- □ TRAINING

■ HIGH ※ MEDIUM □ LOW

PORTABLE TOILETS C5
SCALE: N.T.S.

bhd ARCHITECTS
www.bhdarchitects.com
Phone 801.571.0010
Fax 801.571.0303
Toll Free 888.571.0010
65 East Wadsworth Park Drive
Suite 205 Draper, Utah 84020

PROFESSIONAL ENGINEER
08-15-24
No. 11088925-2202
DANIEL J. CANNING
STATE OF UTAH

THE CHURCH OF JESUS CHRIST OF LATTER-DAY SAINTS

Springwater 9
Vineyard UT Springwater Stake
Approx. 542 South Geneva Road
Vineyard, Utah 84059

Owner #: 502-2004
Plan Series: C300-MH-11
County Parcel: 39:228:0001
BHD #: 2346
Date: 15 Aug 2024

Drawing Issue and Revision Schedule

#	Date	Description
1	15 Aug 2024	Bid Documents

Civil Details

C571

FILTERSOCK SPECIFICATION:

FILTREXX FILTERSOCK INSTALLATION AND MAINTENANCE

1.0 DESCRIPTION:
THIS WORK SHALL CONSIST OF FURNISHING, INSTALLING, MAINTAINING AND DISPERSING (IF NEEDED) A WATER PERMEABLE COMPOST FILTER SOCK (FILTREXX FILTERSOCK) TO CONTAIN SOIL EROSION AND SEDIMENT BY REMOVING SOIL PARTICLES FROM WATER MOVING OFF SITE INTO ADJACENT WATERWAYS OR STORM WATER DRAINAGE SYSTEMS. FILTERSOCKS WILL BE USED AS A FORM OF INLET PROTECTION FOR OPERATIONAL STORM DRAINAGE SYSTEMS.

2.0 COMPOST PRODUCTS USED TO FILL FILTREXX FILTERSOCKS
1. COMPOST: COMPOST USED FOR FILTREXX FILTERSOCKS SHALL BE WEED FREE AND DERIVED FROM A WELL-DECOMPOSED SOURCE OF ORGANIC MATTER. THE COMPOST SHALL BE PRODUCED USING AN AEROBIC COMPOSTING PROCESS MEETING CFR 503 REGULATIONS, INCLUDING TIME AND TEMPERATURE DATA INDICATING EFFECTIVE WEED SEED, PATHOGEN AND INSECT LARVAE KILL. THE COMPOST SHALL BE FREE OF ANY REFUSE, CONTAMINANTS OR OTHER MATERIALS TOXIC TO PLANT GROWTH. NON-COMPOSTED PRODUCTS WILL NOT BE ACCEPTED. TEST METHODS FOR THE ITEMS BELOW SHOULD FOLLOW USCC TMECC GUIDELINES FOR LABORATORY PROCEDURES:
   A. PH - 5.0-8.0 IN ACCORDANCE WITH TMECC 04.11-A, "ELECTROMETRIC PH DETERMINATIONS FOR COMPOST"
   B. PARTICLE SIZE - 99% PASSING A 1" SIEVE, 90% PASSING A _" SIEVE AND A MINIMUM OF 70% GREATER THAN THE 3/8" SIEVE. A TOTAL OF 98 % SHALL NOT EXCEED 3 INCHES IN LENGTH, IN ACCORDANCE WITH TMECC 02.02-B, "SAMPLE SIEVING FOR AGGREGATE SIZE CLASSIFICATION"
   C. MOISTURE CONTENT OF LESS THAN 60% IN ACCORDANCE WITH STANDARDIZED TEST METHODS FOR MOISTURE DETERMINATION.
   D. MATERIAL SHALL BE RELATIVELY FREE (<1% BY DRY WEIGHT) OF INERT OR FOREIGN MAN MADE MATERIALS. E. A SAMPLE SHALL BE SUBMITTED TO THE ENGINEER FOR APPROVAL PRIOR TO BEING USED AND MUST COMPLY WITH ALL LOCAL, STATE AND FEDERAL REGULATIONS.

3.0 CONSTRUCTION AND INSTALLATION OF FILTREXX FILTERSOCKS:
1. FILTREXX FILTERSOCKS WILL BE USED AS A FORM OF INLET PROTECTION ON CONSTRUCTION SITES WHICH REQUIRE PROTECTION AGAINST SEDIMENT LADEN WATER AFTER STORM DRAINS BECOME OPERATIONAL.
2. FILTREXX FILTERSOCKS WILL BE PLACED AT LOCATIONS INDICATED ON PLANS AS DIRECTED BY THE ENGINEER. FILTERSOCKS SHOULD BE INSTALLED IN A PATTERN THAT ALLOWS COMPLETE PROTECTION OF THE INLET AREA.
3. INSTALLATION OF FILTREXX FILTERSOCKS WILL ENSURE A MINIMAL OVERLAP OF AT LEAST ONE FOOT ON EITHER SIDE OF THE OPENING BEING PROTECTED. THE FILTERSOCKS WILL BE ANCHORED TO THE SOIL BEHIND THE CURB USING STAPLES, STAKES OR OTHER DEVICES CAPABLE OF HOLDING THE FILTERSOCK IN PLACE.
4. STANDARD SIZES OF FILTERSOCKS FOR INLET PROTECTION WILL BE 8" DIAMETER PRODUCTS. IN SEVERE FLOW SITUATIONS, LARGER FILTERSOCKS MAY BE RECOMMENDED BY THE ENGINEER.
5. FILTERSOCKS SHALL BE CONSTRUCTED OF A WOVEN MATERIAL AND FILLED WITH A COMPOST PRODUCT THAT PASSES THE CRITERIA LISTED IN SECTION 2.
6. IF THE FILTERSOCKS BECOME CLOGGED WITH DEBRIS AND SEDIMENT, THEY SHALL BE MAINTAINED SO AS TO ASSURE A PROPER DRAINAGE AND WATER FLOW INTO THE STORM DRAIN. IN SEVERE STORM EVENTS, OVERFLOW OF THE FILTERSOCK MAY BE ACCEPTABLE IN ORDER TO KEEP THE AREA FROM FLOODING.
7. THE FILTERSOCKS SHALL BE POSITIONED SO AS TO PROVIDE COMPLETE PHYSICAL BARRIER TO THE DRAIN ITSELF, ALLOWING SEDIMENT TO COLLECT ON THE OUTSIDE OF THE FILTERSOCKS. SEE ATTACHED SCHEMATIC FOR FILTREXX FILTERSOCK INSTALLATION.
8. FOR AREAS WHERE FILTERSOCKS ARE TO BE LEFT AS A PERMANENT PART OF THE LANDSCAPE, FILTERSOCKS MAY BE SEEDED DURING TIME OF MANUFACTURE TO CREATE A LIVING SOCK. FOR SEEDING OPTIONS, THE ENGINEER MAY SIMPLY REPLACE ALL LANGUAGE ABOVE WITH "LIVING FILTREXX FILTERSOCKS"

4.0 MAINTENANCE:
1. THE CONTRACTOR SHALL MAINTAIN FILTREXX FILTERSOCKS IN A FUNCTIONAL CONDITION AT ALL TIMES AND IT SHALL BE ROUTINELY INSPECTED.
2. WHERE THE FILTERSOCK REQUIRES REPAIR, IT WILL BE ROUTINELY REPAIRED.
3. THE CONTRACTOR SHALL REMOVE SEDIMENTS COLLECTED AT THE BASE OF THE FILTERSOCK WHEN THEY REACH 1/3 OF THE EXPOSED HEIGHT OF THE FILTERSOCK, OR AS DIRECTED BY THE ENGINEER.
4. THE FILTREXX FILTERSOCK WILL BE DISPERSED ON SITE WHEN NO LONGER REQUIRED, AS DETERMINED BY THE ENGINEER. THE NETTING MATERIAL WILL BE DISPOSED OF IN NORMAL TRASH CONTAINERS OR REMOVED BY THE CONTRACTOR.
5. REGULAR MAINTENANCE INCLUDES LIFTING THE FILTREXX FILTERSOCKS AND CLEANING UNDER THEM AS SEDIMENT COLLECTS.

5.0 METHOD OF MEASUREMENT:
BID ITEMS SHALL SHOW MEASUREMENT AS 'FILTREXX FILTERSOCK' PER LINEAR FOOT, INSTALLED OR PER INLET, AS SPECIFIED BY THE ENGINEER.

6.0 PERFORMANCE:
1. CONTRACTOR IS RESPONSIBLE FOR ESTABLISHING A WORKING EROSION CONTROL SYSTEM AND MAY, WITH APPROVAL OF THE ENGINEER, WORK OUTSIDE THE MINIMUM CONSTRUCTION REQUIREMENTS AS NEEDED.
2. WHERE THE FILTERSOCK DETERIORATES OR FAILS, IT WILL BE REPAIRED OR REPLACED WITH A MORE EFFECTIVE ALTERNATIVE.
3. CONTRACTOR IS REQUIRED TO BE A CERTIFIED FILTREXX INSTALLER AS DETERMINED BY FILTREXX INTERNATIONAL, LLC (440-926-8041 OR VISIT WEBSITE AT FILTREXX.COM). CERTIFICATION SHALL BE CONSIDERED CURRENT IF APPROPRIATE IDENTIFICATION IS SHOWN DURING TIME OF BID OR AT TIME OF APPLICATION.

7.0 APPLICATION GUIDELINES:
1. FILTREXX FILTERSOCKS SHALL EITHER BE MADE ON SITE OR DELIVERED TO THE JOBSITE USING A 3 MIL TUBULAR HDPE KNITTED MESH NETTING MATERIAL, FILLED WITH COMPOST PASSING THE ABOVE SPECIFICATIONS FOR COMPOST PRODUCTS AS OUTLINED IN 2.0.
2. FILTREXX FILTERSOCKS NETTING MATERIALS ARE AVAILABLE ONLY FROM FILTREXX INTERNATIONAL, LLC AND ARE THE ONLY CERTIFIED MESH MATERIALS ACCEPTED IN CREATING FILTREXX PRODUCTS ON SITE OR AS DELIVERED TO THE JOB SITE. STANDARD FILTREXX COLOR CODING SYSTEMS INCLUDE YELLOW AND BLACK STRIPED MESH NETTING WITH 3/8" MESH OPENINGS FOR INLET PROTECTION. OTHER COLORS ARE ONLY ACCEPTABLE AS APPROVED BY BOTH THE ENGINEER AND FILTREXX INTERNATIONAL, LLC.
3. CONTRACTOR IS REQUIRED TO BE A CERTIFIED FILTREXX INSTALLER AS DETERMINED BY FILTREXX INTERNATIONAL, LLC (440-926-8041 OR VISIT WEBSITE AT FILTREXX.COM). CERTIFICATION SHALL BE CONSIDERED CURRENT IF APPROPRIATE IDENTIFICATION IS SHOWN DURING TIME OF BID OR AT TIME OF APPLICATION.

8.0 AVAILABLE VENDORS FILTREXX FILTERSOCKS MAY BE PURCHASED FROM THE FOLLOWING CERTIFIED FILTREXX INSTALLERS:

WINDSWEPT ORGANIX INC.
WORK: 480-963-4638
FAX: 408-940-4261
850 SOUTH BOGLE AVE, SUITE 2
CHANDLER, AZ 85225

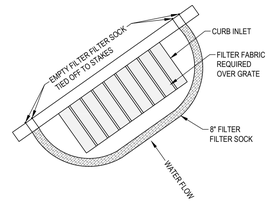

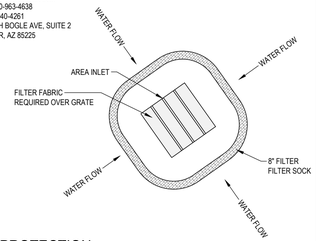

SEDIMENT BARRIER / FILTER SOCK PROTECTION A1
SCALE: N.T.S. © REPLENISH

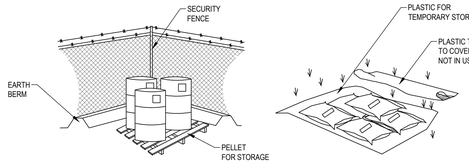

- CONTROLLED STORAGE LOCATION
- BERMED PERIMETER IMPOUNDMENT
- STORAGE OFF GROUND
- COVER WHEN NOT IN USE

DESCRIPTION:
CONTROLLED STORAGE OF ON-SITE MATERIALS.

APPLICATIONS:
- STORAGE OF HAZARDOUS, TOXIC, AND ALL CHEMICAL SUBSTANCES.
- ANY CONSTRUCTION SITE WITH OUTSIDE STORAGE OF MATERIALS.

INSTALLATION/APPLICATION CRITERIA:
- DESIGNATE A SECURED AREA WITH LIMITED ACCESS AS THE STORAGE LOCATION. ENSURE NO WATERWAYS OR DRAINAGE PATHS ARE NEARBY.
- CONSTRUCT COMPACTED EARTHEN BERM (SEE EARTH BERM BARRIER INFORMATION SHEET), OR SIMILAR PERIMETER CONTAINMENT AROUND STORAGE LOCATION FOR IMPOUNDMENT IN THE CASE OF SPILLS.
- ENSURE ALL ON-SITE PERSONNEL UTILIZE DESIGNATED STORAGE AREA. DO NOT STORE EXCESSIVE AMOUNTS OF MATERIAL THAT WILL NOT BE UTILIZED ON SITE.
- FOR ACTIVE USE OF MATERIAL AWAY FROM THE STORAGE AREA ENSURE MATERIALS ARE NOT SET DIRECTLY ON THE GROUND AND ARE COVERED WHEN NOT IN USE. PROTECT STORM DRAINAGE DURING USE.

LIMITATIONS:
- DOES NOT PREVENT CONTAMINATION DUE TO MISHANDLING OF PRODUCTS.
- SPILL PREVENTION AND RESPONSE PLAN STILL REQUIRED.
- ONLY EFFECTIVE IF MATERIALS ARE ACTIVELY STORED IN CONTROLLED LOCATION.

MAINTENANCE:
- INSPECT DAILY AND REPAIR ANY DAMAGE TO PERIMETER IMPOUNDMENT OR SECURITY FENCING.
- CHECK MATERIALS ARE BEING CORRECTLY STORED (I.E. STANDING UPRIGHT, IN LABELED CONTAINERS, TIGHTLY CAPPED) AND THAT NO MATERIALS ARE BEING STORED AWAY FROM THE DESIGNATED LOCATION.

OBJECTIVES
- ※ HOUSEKEEPING PRACTICES
- ※ CONTAIN WASTE
- □ MINIMIZE DISTURBED AREA
- □ STABILIZE DISTURBED AREA
- □ PROTECT SLOPES/CHANNELS
- □ CONTROL SITE PERIMETER
- □ CONTROL INTERNAL EROSION

TARGETED POLLUTANTS
- □ SEDIMENT
- □ NUTRIENTS
- ■ TOXIC MATERIALS
- □ OIL & GREASE
- □ FLOATABLE MATERIALS
- ※ OTHER WASTE

- ■ HIGH IMPACT
- ※ MEDIUM IMPACT
- □ LOW OR UNKNOWN IMPACT

IMPLEMENTATION REQUIREMENTS
- ※ CAPITAL COSTS
- ※ O & M COSTS
- ※ MAINTENANCE
- ■ TRAINING

■ HIGH ※ MEDIUM □ LOW

MATERIALS STORAGE A3
SCALE: N.T.S.

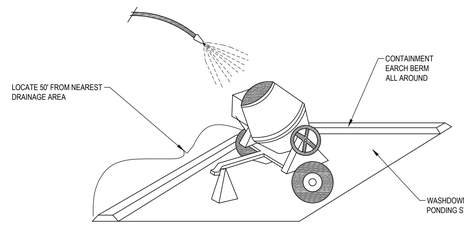

DESCRIPTION:
PREVENT OR REDUCE THE DISCHARGE OF POLLUTANTS TO STORM WATER FROM CONCRETE WASTE BY CONDUCTING WASHOUT OFF-SITE, PERFORMING ON-SITE WASHOUT IN A DESIGNATED AREA, AND TRAINING EMPLOYEES AND SUBCONTRACTORS.

APPLICATIONS:
- THIS TECHNIQUE IS APPLICABLE TO ALL TYPES OF SITES.

INSTALLATION/APPLICATION CRITERIA:
- STORE DRY AND WET MATERIALS UNDER COVER, AWAY FROM DRAINAGE AREAS.
- AVOID MIXING EXCESS AMOUNTS OF FRESH CONCRETE OR CEMENT ON-SITE.
- PERFORM WASHOUT OF CONCRETE TRUCKS OFF-SITE OR IN DESIGNATED AREAS ONLY.
- DO NOT WASH OUT CONCRETE TRUCKS INTO STORM DRAINS, OPEN DITCHES, STREETS, OR STREAMS.
- DO NOT ALLOW EXCESS CONCRETE TO BE DUMPED ON-SITE, EXCEPT IN DESIGNATED AREAS.
- WHEN WASHING CONCRETE TO REMOVE FINE PARTICLES AND EXPOSE THE AGGREGATE, AVOID CREATING RUNOFF BY DRAINING THE WATER WITHIN A BERMED OR LEVEL AREA (SEE EARTH BERM BARRIER INFORMATION SHEET.)
- TRAIN EMPLOYEES AND SUBCONTRACTORS IN PROPER CONCRETE WASTE MANAGEMENT.

LIMITATIONS:
- OFF-SITE WASHOUT OF CONCRETE WASTES MAY NOT ALWAYS BE POSSIBLE.

MAINTENANCE:
- INSPECT SUBCONTRACTORS T ENSURE THAT CONCRETE WASTES ARE BEING PROPERLY MANAGED.
- IF USING A TEMPORARY PIT, DISPOSE HARDENED CONCRETE ON A REGULAR BASIS.

OBJECTIVES
- □ HOUSEKEEPING PRACTICES
- ※ CONTAIN WASTE
- □ MINIMIZE DISTURBED AREA
- □ STABILIZE DISTURBED AREA
- □ PROTECT SLOPES/CHANNELS
- □ CONTROL SITE PERIMETER
- □ CONTROL INTERNAL EROSION

TARGETED POLLUTANTS
- □ SEDIMENT
- □ NUTRIENTS
- □ TOXIC MATERIALS
- □ OIL & GREASE
- □ FLOATABLE MATERIALS
- ※ OTHER WASTE

- ■ HIGH IMPACT
- ※ MEDIUM IMPACT
- □ LOW OR UNKNOWN IMPACT

IMPLEMENTATION REQUIREMENTS
- □ CAPITAL COSTS
- □ O & M COSTS
- ※ MAINTENANCE
- ※ TRAINING

■ HIGH ※ MEDIUM □ LOW

CONCRETE WASTE MANAGEMENT A5
SCALE: N.T.S.

Printed: 15 Aug 2024 12:56 PM

GENERAL NOTES

1.1 COMPLIANCE

1. ALL WORK TO CONFORM TO GOVERNING MUNICIPALITY'S STANDARDS, SPECIFICATIONS AND REQUIREMENTS.
2. ALL CONSTRUCTION AND MATERIALS SHALL BE IN ACCORDANCE WITH THESE CONTRACT DOCUMENTS AND THE MOST RECENT, ADOPTED EDITIONS OF THE FOLLOWING: INTERNATIONAL BUILDING CODE (IBC), THE INTERNATIONAL PLUMBING CODE, STATE DRINKING WATER REGULATIONS, APWA MANUAL OF STANDARD PLANS AND SPECIFICATIONS, ADA ACCESSIBILITY GUIDELINES.
3. ALL CONSTRUCTION SHALL BE AS SHOWN ON THESE PLANS. ANY REVISIONS MUST HAVE PRIOR WRITTEN APPROVAL.

1.2 PERMITTING AND INSPECTIONS

1. PRIOR TO STARTING CONSTRUCTION, THE CONTRACTOR SHALL BE RESPONSIBLE FOR MAKING SURE THAT ALL REQUIRED PERMITS AND APPROVALS HAVE BEEN OBTAINED. NO CONSTRUCTION OR FABRICATION SHALL BEGIN UNTIL THE CONTRACTOR HAS RECEIVED THOROUGHLY REVIEWED PLANS AND OTHER DOCUMENTS APPROVED BY ALL OF THE PERMITTING AUTHORITIES.
2. CONTRACTOR IS RESPONSIBLE FOR SCHEDULING AND NOTIFYING ARCHITECT/ENGINEER OR INSPECTING AUTHORITY 48 HOURS IN ADVANCE OF COVERING UP ANY PHASE OF CONSTRUCTION REQUIRING OBSERVATION.
3. ANY WORK IN THE PUBLIC RIGHT-OF-WAY WILL REQUIRE PERMITS FROM THE APPROPRIATE, CITY, COUNTY OR STATE AGENCY CONTROLLING THE ROAD AND WITH APPROPRIATE INSPECTIONS.

1.3 COORDINATION & VERIFICATION

1. ALL DIMENSIONS, GRADES & UTILITY DESIGNS SHOWN ON THE PLANS SHALL BE VERIFIED BY THE CONTRACTOR PRIOR TO CONSTRUCTION. CONTRACTOR SHALL NOTIFY ARCHITECT/ENGINEER OF ANY DISCREPANCIES PRIOR TO PROCEEDING WITH CONSTRUCTION FOR NECESSARY PLAN OR GRADE CHANGES. NO EXTRA COMPENSATION SHALL BE PAID TO THE CONTRACTOR FOR WORK HAVING TO BE REDONE DUE TO DIMENSIONS OR GRADES SHOWN INCORRECTLY ON THESE PLANS, IF NOT VERIFIED AND NOTIFICATION OF CONFLICTS HAVE NOT BEEN BROUGHT TO THE ATTENTION OF THE ARCHITECT/ENGINEER.
2. CONTRACTOR MUST VERIFY ALL EXISTING CONDITIONS BEFORE BIDDING AND BRING UP ANY QUESTIONS BEFOREHAND. NO ALLOWANCE WILL BE MADE FOR DISCREPANCIES OR OMISSIONS THAT CAN BE EASILY OBSERVED.
3. CONTRACTOR TO COORDINATE WITH ALL OTHER DISCIPLINES, INCLUDING BUT NOT LIMITED TO: LANDSCAPE PLANS, SITE ELECTRICAL SITE LIGHTING PLANS AND ELECTRICAL SERVICE TO THE BUILDING(S), MECHANICAL PLANS FOR LOCATION OF SERVICES TO THE BUILDING(S), INCLUDING FIRE PROTECTION, ARCHITECTURAL SITE PLAN FOR DIMENSIONS, ACCESSIBLE ROUTES, ETC., NOT SHOWN ON CIVIL PLANS.
4. CONTRACTOR IS TO COORDINATE LOCATION OF NEW TELEPHONE SERVICE, GAS SERVICE, CABLE, ETC. TO BUILDING WITH THE APPROPRIATE UTILITY COMPANY. FOR TELEPHONE, CONTRACTOR TO FURNISH CONDUIT, PLYWOOD BACKBOARD, AND GROUND WIRE, AS REQUIRED.

1.4 SAFETY AND PROTECTION

1. CONTRACTOR IS SOLELY RESPONSIBLE FOR THE MEANS AND METHODS OF CONSTRUCTION,
2. CONTRACTOR IS RESPONSIBLE FOR THE SAFETY OF THE PROJECT AND SHALL MEET ALL OSHA REQUIREMENTS.
3. CONTRACTOR IS RESPONSIBLE FOR CONFORMING TO LOCAL AND FEDERAL CODES GOVERNING SHORING AND BRACING OF EXCAVATIONS AND TRENCHES, AND FOR THE PROTECTION OR WORKERS AND PUBLIC.
4. CONTRACTOR SHALL TAKE ALL MEASURES NECESSARY TO PROTECT ALL EXISTING PUBLIC AND PRIVATE PROPERTY, ROADWAYS, AND UTILITY IMPROVEMENTS. DAMAGE TO EXISTING IMPROVEMENTS CAUSED BY THE CONTRACTOR MUST BE REPAIRED BY THE CONTRACTOR AT HIS/HER EXPENSE TO THE SATISFACTION OF THE OWNER OF SAID IMPROVEMENTS.
5. CONTRACTOR IS REQUIRED TO KEEP ALL CONSTRUCTION ACTIVITIES WITHIN THE APPROVED PROJECT LIMITS. THIS INCLUDES, BUT IS NOT LIMITED TO, VEHICLE AND EQUIPMENT STAGING, MATERIAL STORAGE AND LIMITS OF TRENCH EXCAVATION.
6. IT IS THE CONTRACTOR'S RESPONSIBILITY TO OBTAIN PERMISSION AND/OR EASEMENTS FROM THE APPROPRIATE GOVERNMENT AGENCY AND/OR INDIVIDUAL PROPERTY OWNER(S) FOR WORK OR STAGING OUTSIDE OF THE PROJECT LIMITS.
7. CONTRACTOR SHALL PROVIDE BARRICADES, SIGNS, FLASHERS, OTHER EQUIPMENT AND FLAG PERSONS NECESSARY TO INSURE THE SAFETY OF WORKERS AND VISITORS. ALL CONSTRUCTION SIGNING, BARRICADING, AND TRAFFIC DELINEATION SHALL CONFORM TO THE "MANUAL ON UNIFORM TRAFFIC CONTROL DEVICES", LATEST EDITION.
8. CONTRACTOR SHALL COMPLY WITH LOCAL NOISE ORDINANCE STANDARDS.
9. CONTRACTOR IS RESPONSIBLE FOR DUST CONTROL ACCORDING TO GOVERNING AGENCY STANDARDS.
10. CONTRACTOR SHALL TAKE ALL NECESSARY AND PROPER PRECAUTIONS TO PROTECT ADJACENT PROPERTIES FROM ANY AND ALL DAMAGE THAT MAY OCCUR FROM STORM WATER RUNOFF AND/OR DEPOSITION OF DEBRIS RESULTING FROM ANY AND ALL WORK IN CONNECTION WITH CONSTRUCTION. SUBMIT A STORM WATER POLLUTION PREVENTION PLAN, IF REQUIRED.
11. WORK IN PUBLIC STREETS, ONCE BEGUN, SHALL BE PROSECUTED TO COMPLETION WITHOUT DELAY AS TO PROVIDE MINIMUM INCONVENIENCE TO ADJACENT PROPERTY OWNERS AND TO THE TRAVELING PUBLIC.
12. CONTRACTOR SHALL PROVIDE ALL NECESSARY HORIZONTAL AND VERTICAL TRANSITIONS BETWEEN NEW CONSTRUCTION AND EXISTING SURFACES TO PROVIDE FOR PROPER DRAINAGE AND FOR INGRESS AND EGRESS TO NEW CONSTRUCTION.
13. NATURAL VEGETATION AND SOIL COVER SHALL NOT BE DISTURBED PRIOR TO ACTUAL CONSTRUCTION OF A REQUIRED FACILITY OR IMPROVEMENT. MASS CLEARING OF THE SITE IN ANTICIPATION OF CONSTRUCTION SHALL BE AVOIDED. CONSTRUCTION TRAFFIC SHALL BE LIMITED TO ONE APPROACH TO THE SITE. THE APPROACH SHALL BE DESIGNATED BY THE OWNER OR GOVERNING AGENCY.
14. THE CONTRACTOR SHALL TAKE REASONABLE MEASURE TO PROTECT EXISTING IMPROVEMENTS FROM DAMAGE AND ALL SUCH IMPROVEMENTS DAMAGED BY THE CONTRACTOR'S OPERATION SHALL BE REPAIRED OR RECONSTRUCTED TO THE ENGINEER/OWNER'S SATISFACTION AT THE EXPENSE OF THE CONTRACTOR.

1.5 GRADING / SOILS

1. CONTRACTOR SHALL SUBMIT A COMPACTION REPORT PREPARED BY A QUALIFIED REGISTERED SOILS ENGINEER, VERIFYING THAT ALL FILLED AREAS AND SUBGRADE AREAS WITH THE BUILDING PAD AREA AND AREAS TO BE PAVED, HAVE BEEN COMPACTED IN ACCORDANCE WITH THESE PLANS AND SPECIFICATIONS.
2. SITE CLEARING SHALL INCLUDE THE LOCATING AND REMOVAL OF ALL UNDERGROUND TANKS, PIPES, VALVES, ETC.
3. ALL EXISTING VALVES, MANHOLES, ETC. SHALL BE RAISED OR LOWERED TO GRADE AS REQUIRED.

1.6 UTILITIES

1. THE LOCATIONS OF UNDERGROUND FACILITIES SHOWN ON THESE PLANS ARE BASED ON FIELD SURVEYS AND LOCAL UTILITY COMPANY RECORDS. IT SHALL BE THE CONTRACTOR'S FULL RESPONSIBILITY TO CONTACT THE VARIOUS UTILITY COMPANIES EITHER DIRECT OR THROUGH BLUE STAKE TO LOCATE THEIR FACILITIES PRIOR TO STARTING CONSTRUCTION.
2. CONTRACTOR TO VERIFY BY POTHOLING BOTH THE VERTICAL AND HORIZONTAL LOCATION OF ALL EXISTING UTILITIES PRIOR TO INSTALLING ANY NEW LINES. NO ADDITIONAL COMPENSATION SHALL BE PAID TO THE CONTRACTOR FOR DAMAGE AND REPAIR TO THESE FACILITIES CAUSED BY HIS WORK FORCE.
3. CONTRACTOR MUST START AT LOW END OF ALL NEW GRAVITY UTILITY LINES. MECHANICAL SUB-CONTRACTOR MUST BE PROVIDED CIVIL SITE DRAWINGS FOR COORDINATION AND TO CHECK THE FLOW FROM THE LOWEST POINT IN BUILDING TO THE FIELD VERIFIED CONNECTION AT THE EXISTING MAIN. NO EXTRA COMPENSATION IS TO BE PAID TO THE CONTRACTOR FOR WORK HAVING TO BE REDONE DUE TO FAILURE TO COMPLY WITH THESE REQUIREMENTS.
4. CONTRACTOR IS TO VERIFY LOCATION, DEPTH, SIZE, TYPE, AND OUTSIDE DIAMETERS OF UTILITIES IN THE FIELD BY POTHOLING A MINIMUM OF 300 FEET AHEAD. PIPELINE CONSTRUCTION TO AVOID CONFLICTS WITH DESIGNED PIPELINE GRADE AND ALIGNMENT. EXISTING UTILITY INFORMATION SHOWN ON PLANS OR OBTAINED FROM UTILITY COMPANIES OR BLUE STAKED MUST BE ASSUMED AS APPROXIMATE, REQUIRING FIELD VERIFICATION.
5. CULINARY WATER AND FIRE SERVICE LINES TO BE CONSTRUCTED IN ACCORDANCE WITH LOCAL GOVERNING MUNICIPALITY STANDARDS AND SPECIFICATIONS.
6. SANITARY SEWER MAINS AND LATERALS TO BE CONSTRUCTED IN ACCORDANCE WITH LOCAL GOVERNING MUNICIPALITY SEWER DISTRICT STANDARDS AND SPECIFICATIONS.
7. STORM SEWER TO BE CONSTRUCTED IN ACCORDANCE WITH THE GOVERNING MUNICIPALITY STANDARDS AND SPECIFICATIONS.
8. ALL STORM DRAIN AND IRRIGATION CONDUITS SHALL BE INSTALLED WITH WATER TIGHT JOINTS AND CONNECTIONS.
9. ALL STORM DRAIN PIPE PENETRATIONS INTO BOXES SHALL BE CONSTRUCTED WITH WATER TIGHT SEALS ON THE OUTSIDE AND GROUTED SMOOTH WITH A NON-SHRINK GROUT ON THE INSIDE. CONDUITS SHALL BE CUT OFF FLUSH WITH THE INSIDE OF THE BOX.
10. NO CHANGE IN THE DESIGN OF UTILITIES AS SHOWN WILL BE MADE BY THE CONTRACTOR WITHOUT THE WRITTEN APPROVAL OF THE GOVERNING MUNICIPALITY, OR OTHER AUTHORITY HAVING JURISDICTION OVER THAT UTILITY.
11. ALL STORM DRAIN CONDUITS AND BOXES SHALL BE CLEAN AND FREE OF ROCKS, DIRT, AND CONSTRUCTION DEBRIS PRIOR TO FINAL INSPECTION.

1.8 SURVEY CONTROL

1. CONTRACTOR MUST PROVIDE A REGISTERED LAND SURVEYOR OR PERSONS UNDER THE SUPERVISION OF A REGISTERED LAND SURVEYOR TO SET STAKES FOR THE ALIGNMENT AND GRADE OF EACH MAIN AND/OR FACILITY AS SHOWN ON THE PLANS. THE STAKES SHALL BE MARKED WITH THE HORIZONTAL LOCATION (STATION) AND VERTICAL LOCATION (GRADE) WITH CUTS AND/OR FILLS TO THE APPROVED GRADE OF THE MAIN AND OR FACILITY AS SHOWN ON THE PLANS.
2. THE CONTRACTOR SHALL PROTECT ALL STAKES AND MARKERS FOR VERIFICATION PURPOSES.
3. CONTRACTOR WILL BE RESPONSIBLE FOR FURNISHING, MAINTAINING, OR RESTORING ALL MONUMENTS AND REFERENCE MARKS WITHIN THE PROJECT SITE.

1.9 AMERICAN DISABILITIES ACT

1. PEDESTRIAN / ADA ROUTES SHALL MEET THE FOLLOWING SPECIFICATIONS:
   *ROUTES SHALL HAVE A 2.00% (1:50) MAXIMUM CROSS SLOPE.
   *ROUTES SHALL HAVE A 5.00% (1:20) MAXIMUM RUNNING SLOPE.
   *RAMPS SHALL HAVE A 8.33% (1:12) MAXIMUM RUNNING SLOPE.
2. ADA PARKING STALLS AND ADJACENT ROUTES SHALL HAVE A 2.00% (1:50) MAXIMUM SURFACE SLOPE IN ANY DIRECTION.
3. THE CONTRACTOR SHALL ADHERE TO THE ABOVE SPECIFICATIONS. IN THE EVENT OF A DISCREPANCY IN THE CONSTRUCTION DOCUMENTS, THE CONTRACTOR SHALL NOTIFY THE ARCHITECT/ENGINEER PRIOR TO ANY CONSTRUCTION.

LEGEND

NEW	EXISTING		NEW	EXISTING	
		MONUMENT LINE			SECTION CORNER (FOUND)
		CENTER LINE			
		SUBJECT PROPERTY LINE			SECTION CORNER (NOT FOUND)
		ADJACENT PROPERTY LINE			
		EASEMENT LINE			STREET MONUMENT
		DITCH FLOWLINE			BRASS CAP MONUMENT
X	X	FENCE LINE			POWER POLE
ATMS	atms	ATMS CABLE			UTILITY POLE
TV	tv	CABLE TV LINE	GUY	GUY	GUY ANCHOR
C	c	COMMUNICATIONS LINE	TRANS	TRANS	POWER TRANSFORMER
FO	fo	FIBER-OPTIC CABLE			TRAFFIC SIGNAL CABINET
F	f	FIRE LINE			LIGHT POLE
IRR	irr	IRRIGATION LINE	TR	TR	TELEPHONE RISER
G	g	NATURAL GAS LINE	T	T	TELEPHONE MANHOLE
OHC	ohc	OVERHEAD COMMUNICATIONS			TRAFFIC SIGNAL BOX
OHP	ohp	OVERHEAD POWER LINE	W	W	WATER MANHOLE
OHT	oht	OVERHEAD TELEPHONE LINE			WATER VALVE
OHTV	ohtv	OVERHEAD TELEVISION LINE	WM	WM	WATER METER
P	p	POWER LINE			FIRE HYDRANT
P/C	p/c	POWER/COMMUNICATIONS LINE	S	S	SANITARY SEWER MANHOLE
P/T	p/t	POWER/TELEPHONE LINE	SSCO	SSCO	SANITARY SEWER CLEANOUT
P/T/C	p/t/c	POWER/TELE/COMM LINE	SD	SD	STORM DRAIN MANHOLE
RD	rd	ROOF DRAIN LINE			STORM DRAIN CURB INLET
SW	sw	SECONDARY WATER LINE			STORM DRAIN CATCH BASIN
S	s	SANITARY SEWER LINE	SD	SD	STORM DRAIN CLEANOUT
ST	st	STEAM LINE			STORM DRAIN COMBO BOX
SD	sd	STORM DRAIN LINE	MB	MB	MAILBOX
T	t	TELEPHONE LINE			SIGN
T/C	t/c	TELEPHONE/COMM LINE			FLOW DIRECTION
UD	ud	UNDERDRAIN	44.00 TOC	*44.00 EX TOC*	SPOT ELEVATION
UGC	ugc	UNDERGROUND COMMUNICATIONS			CONIFEROUS TREE
UGP	ugp	UNDERGROUND POWER LINE			
UGT	ugt	UNDERGROUND TELEPHONE LINE			DECIDUOUS TREE
UGTV	ugtv	UNDERGROUND TELEVISION			
W	w	WATER LINE			
T2	4572	CONTOUR LINE			
		CURB & GUTTER (STD)			
		CURB & GUTTER (OUTFALL)			
		CONCRETE PAVEMENT			
		STD. DUTY ASPHALT			
		HEAVY DUTY ASPHALT			

ABBREVIATIONS

AC	ACRE	E	EAST	GV	GAS VALVE	PP	POWER POLE
ADA	AMERICANS WITH DISABILITIES ACT	EB	ELECTRIC BOX	HDPE	HIGH DENSITY POLYETHYLENE	PRC	POINT OF REVERSE CURVE
ATMS	ADVANCED TRAFFIC MGMT. SYSTEM	EGL	ENERGY GRADE LINE	HG	HEADGATE	PRK	PARKING STRIPE
B&C	BAR & CAP	ELEV	ELEVATION	HGL	HYDRAULIC GRADE LINE	PCC	POINT OF CONNECTION
BC	BUILDING CORNER	EM	ELECTRIC METER	HP	HIGH POINT	PT	POINT OF TANGENCY
BLUE	BLUE STAKED ELECTRIC	EMH	ELECTRIC MANHOLE	HW	HEADWALL or HIGH WATER	PWR	POWER
BLUFO	BLUE STAKED FIBER OPTIC	EOA	EDGE OF ASPHALT	HWY	HIGHWAY	PVC	POLYVINYL CHLORIDE PIPE
BLUG	BLUE STAKED NATURAL GAS	EOC	EDGE OF CONCRETE	ICO	IRRIGATION CLEANOUT	R	RANGE
BLUIRR	BLUE STAKED IRRIGATION	EOG	EDGE OF GRAVEL	ICV	IRRIGATION CONTROL VALVE	RCP	REINFORCED CONCRETE PIPE
BLUSD	BLUE STAKED STORM DRAIN	EOL	EDGE OF LAWN	IE	INVERT ELEVATION	RD	ROOF DRAIN
BLUSS	BLUE STAKED SANITARY SEWER	EX or EXIST	EXISTING	IRR	IRRIGATION	REV	REVISION
BLUT	BLUE STAKED TELEPHONE	F	FIRE	LF	LINEAR FEET	ROW	RIGHT-OF-WAY
BLUW	BLUE STAKED WATER	FC	FOUNDATION CORNER	LIP	LIP OF GUTTER	RR	RAILROAD
BM	BENCHMARK	FD	FOUND	LP	LOW POINT or LIGHT POLE	S	SOUTH
BOB	BOTTOM OF BOX	FDC	FIRE DEPT. CONNECTION	MAX	MAXIMUM	SAD	SEE ARCHITECTURAL DRAWINGS
BOL	BOLLARD	FDMN	FOUND MONUMENT	MIN	MINIMUM	SD	STORM DRAIN
BOV	BLOW-OFF VALVE	FDSC	FOUND SECTION CORNER	MON	MONUMENT	SDCB	STORM DRAIN CATCH BASIN
BOW	BACK OF WALK	FFE	FINISHED FLOOR ELEVATION	MP	METAL PIPE	SDCO	STORM DRAIN CLEOUNOUT BOX
BW	BOTTOM OF WALL	FG	FINISHED GRADE	MW	MONITORING WELL	SDMH	STORM DRAIN MANHOLE
℄	CENTERLINE	FH	FIRE HYDRANT	N	NORTH	SEC	SECTION
CATV	CABLE TELEVISION	FL	FLOW LINE	NG	NATURAL GROUND	SPECS	SPECIFICATIONS
CBR	CONCRETE BARRIER	FNC	FENCE	NGRET	NG AT RETAINING WALL	SLB&M	SALT LAKE BASE & MERIDIAN
CC	CURB CUT	FNCCL	CHAIN LINK FENCE	NR	NAIL & RIBBON	SQ	SQUARE
COL	COLUMN	FNCIRN	IRON FENCE	NW	NAIL & WASHER	SQFT	SQUARE FEET
COMM	COMMUNICATIONS	FNCVYL	VINYL FENCE	NTS	NOT TO SCALE	SQYD	SQUARE YARD
CONC	CONCRETE	FNCWD	WOOD FENCE	OG	ORIGINAL GROUND	SS	SANITARY SEWER
CONST	CONSTRUCTION	FNCWR	WIRE FENCE	OH	OVERHANG	SSCO	SANITARY SEWER CLEANOUT
CMP	CORRUGATED METAL PIPE	FO	FIBER OPTIC	OHC	OVERHEAD COMMUNICATIONS	SSMH	SANITARY SEWER MANHOLE
CP	CONTROL POINT	FOW	FRONT OF WALK	OHP	OVERHEAD POWER	ST	STEAM
CTREE	CONIFEROUS TREE	FT	FEET	OHT	OVERHEAD TELEPHONE	STA	STATION
CUFT	CUBIC FOOT	G	NATURAL GAS	OHTV	OVERHEAD TELEVISION	STD	STANDARD
CUYD	CUBIC YARD	GAR	GARAGE	℘	PROPERTY LINE	STM	STORM
DEL	DELINEATOR	GB	GRADE BREAK	PB	POWER BOX	SYL	SOLID YELLOW LINE
DIA or Ø	DIAMETER	GL	GROUND LIGHT	PC	POINT OF CURVATURE	SWL	SOLID WHITE LINE
DIP	DUCTILE IRON PIPE	GM	GAS METER	PCC	POINT OF COMPOUND CURVE	T	TOWNSHIP
DTREE	DECIDUOUS TREE	GMH	GAS MANHOLE	PI	POINT OF INTERSECTION	TBC	TOP BACK OF CURB
DYL	DOUBLE YELLOW LINE	GUY	GUY WIRE	PM	PARKING METER	TELE	TELEPHONE
						TFC	TOP FACE OF CURB
						TL	TREE LINE
						TMH	TELEPHONE MANHOLE
						TOA	TOP OF ASPHALT
						TOC	TOP OF CONCRETE
						TOE	TOE OF SLOPE
						TOP	TOP OF SLOPE or TOP OF PIPE
						TOW	TOP OF WALK
						TR	TELEPHONE RISER
						TV	TELEVISION
						TW	TOP OF WALL
						TRANS	TRANSFORMER
						TSP	TRAFFIC SIGNAL POLE
						TSB	TRAFFIC SIGNAL BOX
						UD	UNDERDRAIN
						UGC	UNDERGROUND COMMUNICATIONS
						UGP	UNDERGROUND POWER
						UGT	UNDERGROUND TELEPHONE
						UGTV	UNDERGROUND TELEVISION
						U.N.O.	UNLESS NOTED OTHERWISE
						UP	UTILITY POLE
						VCP	VITRIFIED CLAY PIPE
						VP	VERTICAL PIPE
						W	WEST or WATER
						WM	WATER METER
						WMH	WATER MANHOLE
						WS	WATER SURFACE
						WTR	WATER
						WV	WATER VALVE
						WW	WATERWAY

bhd ARCHITECTS
www.bhdarchitects.com
Phone 801.571.0010
Fax 801.571.0303
Toll Free 888.571.0010
65 East Wadsworth Park Drive
Suite 205 Draper, Utah 84020

PROFESSIONAL ENGINEER
08-15-24
No. 14888925-2202
DANIEL J. CANNING
STATE OF UTAH

THE CHURCH OF JESUS CHRIST OF LATTER-DAY SAINTS

Springwater 9
Vineyard UT Springwater Stake

Approx. 540 South Geneva Road
Vineyard, Utah 84059

BHD #: 2346
County Parcel: 39-228:0001
Plan Series: G300-MH-11
Owner #: 502-2004
Date: 15 Aug 2024

Drawing Issue and Revision Schedule

#	Date	Description
1	15 Aug 2024	Bid Documents

Civil Notes

C601

Printed: 15 Aug 2024 12:55 PM

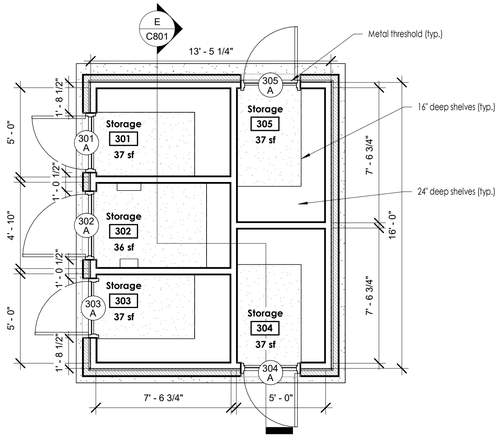

1 Floor Plan

Scale: 1/4" = 1'-0"

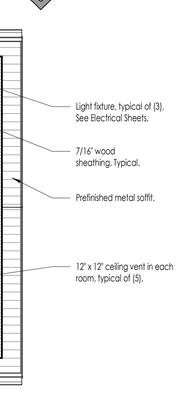

2 Ceiling Plan

Scale: 1/4" = 1'-0"

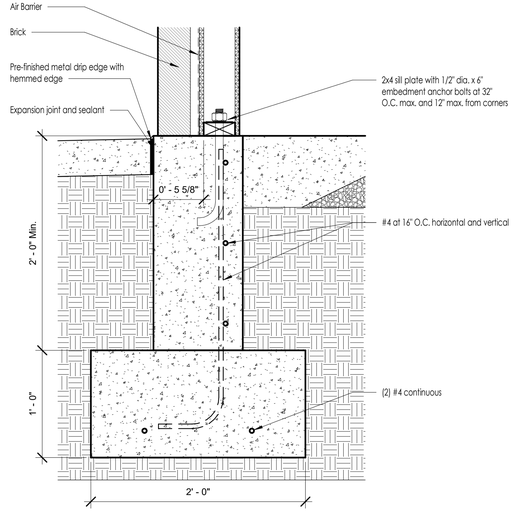

F Wall Base Detail

Scale: 1 1/2" = 1'-0"

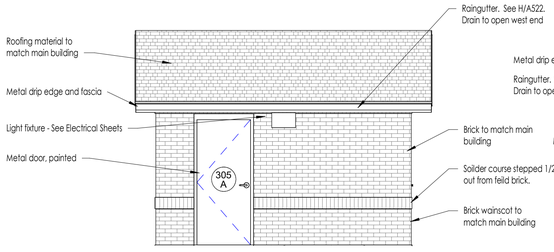

A Building Elevation

Scale: 1/4" = 1'-0"

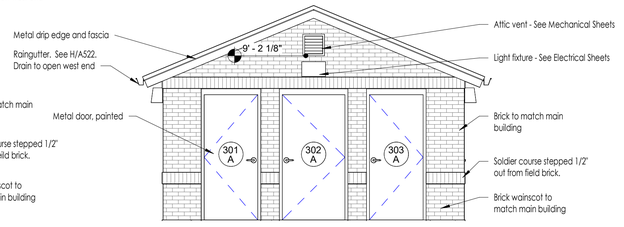

B Building Elevation

Scale: 1/4" = 1'-0"

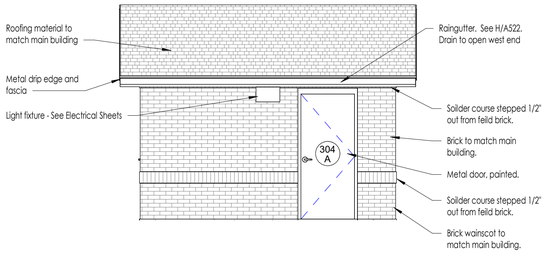

C Building Elevation

Scale: 1/4" = 1'-0"

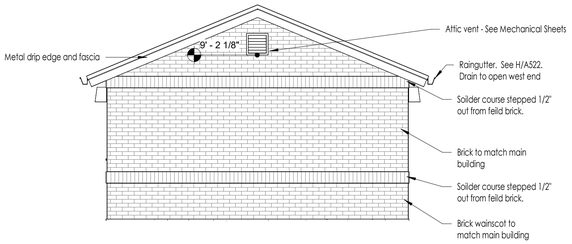

D Building Elevation

Scale: 1/4" = 1'-0"

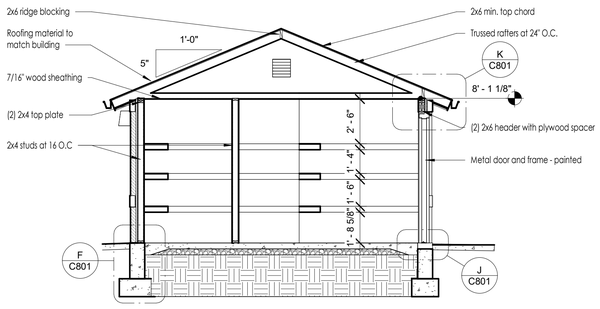

E Section

Scale: 1/4" = 1'-0"

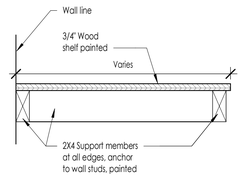

G Shelf Detail

Scale: 1 1/2" = 1'-0"

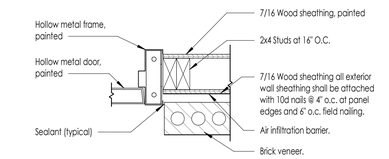

H Jamb Detail

Scale: 1 1/2" = 1'-0"

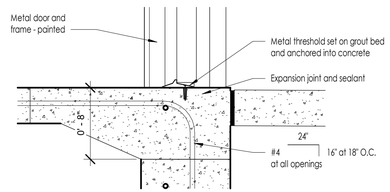

J Door Threshold Detail

Scale: 1 1/2" = 1'-0"

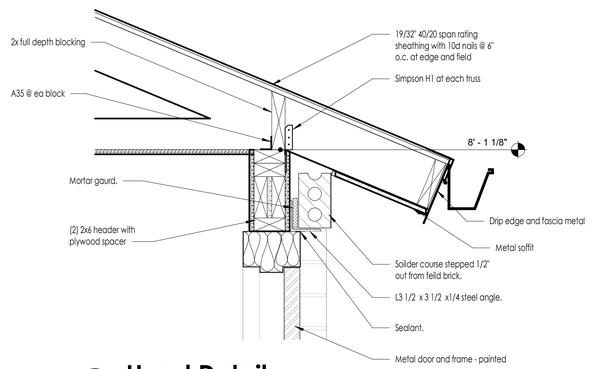

K Head Detail

Scale: 1 1/2" = 1'-0"

Code Analysis	
Building Code	IBC 2021
Occupancy	S-1
Construction Type	V-B ; Non-Sprinklered
Height	12'
Stories	1
Building Area	241 Gross SF
Occupant Load	241/300 = .80 = 1 Occupant
Building is Unconditioned - No Heating or Cooling	

bhd ARCHITECTS
www.bhdarchitects.com
Phone 801.571.0010
Fax 801.571.0303
Toll Free 888.571.0010
65 East Wadsworth Park Drive
Suite 205 Draper, Utah 84020

LICENSED ARCHITECT
Lafe Theadore Harris
15 Aug 2024
My 8878-0301
STATE OF UTAH

THE CHURCH OF JESUS CHRIST OF LATTER-DAY SAINTS

Springwater 9
Vineyard UT Springwater Stake

Approx. 542 South Geneva Road
Vineyard, Utah 84059

Date: 15 Aug 2024
BHD #: 2346
County Parcel: 39-228:0001
Plan Series: C300-MH-11
Owner #: 502-2004

Drawing Issue and Revision Schedule

#	Date	Description
1	15 Aug 2024	Bid Documents

Storage Building

C801

8/15/2024 9:51:51 AM

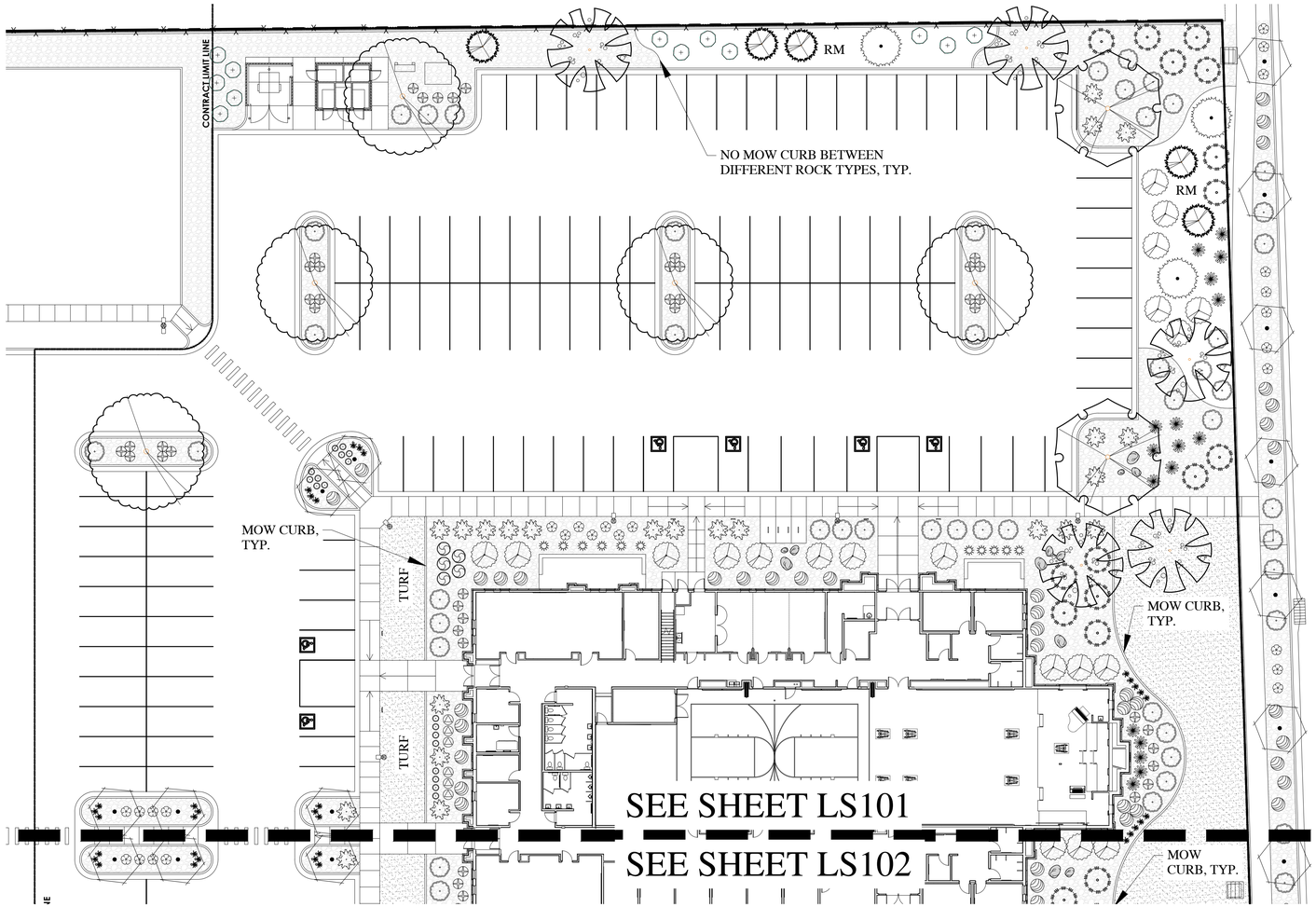

BROADLEAF DECIDUOUS LEGEND

SYMBOL	BOTANICAL NAME/COMMON NAME	QTY	SIZE
	ACER MIYABEI 'MORTON' STATE STREET STATE STREET MAPLE	8	2" CAL.
	CARPINUS CAROLINIANA 'RISING FIRE' RISING FIRE AMERICAN HORNBEAM	58	2" CAL.
	CERCIS CANADENSIS EASTERN REDBUD *	19	2" CAL.
		6	2" CAL.
	GLEDITSIA TRIACANTHOS 'IMPERIAL' IMPERIAL HONEYLOCUST		
		6	2" CAL.
	ZELKOVA SERRATA 'GREEN VASE' GREEN VASE ZELKOVA*	20	2" CAL.

CONIFER / EVERGREEN LEGEND

SYMBOL	BOTANICAL NAME/COMMON NAME	QTY	SIZE
	PICEA OMORIKA SERBIAN SPRUCE*	18	6-7' TALL
	PINUS NIGRA 'OREGON GREEN' OREGON GREEN PINE*	30	6-7' TALL

PERENNIAL LEGEND

SYMBOL	BOTANICAL NAME/COMMON NAME	QTY	SIZE
	HEMEROCALLIS 'STELLA D'ORO' STELLA D'ORO DAYLILY*	16	1 GAL.
	HEMEROCALLIS X 'ROSY RETURNS' ROSY RETURNS DAYLILY*	40	1 GAL.

GRASS LEGEND

SYMBOL	BOTANICAL NAME/COMMON NAME	QTY	SIZE
	CALAMAGROSTIS ACUTIFLORA 'KARL FOERSTER' FEATHER REED GRASS*	23	1 GAL.
	HELICTOTRICHON SEMPERVIRENS 'SAPPHIRE' BLUE OAT AVENA GRASS*	55	1 GAL.

SHRUB LEGEND

SYMBOL	BOTANICAL NAME/COMMON NAME	QTY	SIZE
	BUDDLEIA X 'FLUTTERBY PETITE' DWARF BUTTERFLY BUSH*	79	5 GAL.
	CERCOCARPUS INTRICATUS LITTLELEAF MOUNTAIN MAHOGANY*	12	5 GAL.
	FORSYTHIA X 'COURTASOL' GOLD TIDE FORSYTHIA	10	5 GAL.
	JUNIPERUS SABINA 'SCANDIA' SCANDIA JUNIPER*	40	5 GAL.
	PHYSOCARPUS OPULIFOLIUS 'LITTLE DEVIL' LITTLE DEVIL NINEBARK*	40	5 GAL.
	PINUS MUGO 'SLOWMOUND' SLOWMOUND MUGO PINE*	4	5 GAL.
	PRUNUS BESSEYI 'PAWNEE BUTTES' PAWNEE BUTTES SAND CHERRY*	92	5 GAL.
	RHUS AROMATICA 'GRO-LOW' GRO LOW SUMAC*	28	5 GAL.
	ROSA X 'WEKSCHNEEKOPPE' SNOW PAVEMENT RUGOSA SHRUB ROSES*	40	5 GAL.
	RIBES ALPINUM 'GREEN MOUND' GREEN MOUND CURRANT	63	5 GAL.
	SPIRAEA JAPONICA 'MAGIC CARPET' MAGIC CARPET SPIREA	6	5 GAL.
	SYMPHORICARPOS X CHENAULTII 'HANCOCK' HANCOCK CORALBERRY* (LOW-SPREADING)	31	5 GAL.

DESIGN CRITERIA

ECO-REGION	10.1 NORTHERN COLD DESERT
CLIMATE	U.S. HARDINESS ZONE 5
ZONING ORDINANCE	VINEYARD CITY
WATER AVAILABILITY	NA
SOIL TYPE	NA
SLOPES	SEE GRADING PLAN
WIND	SOUTH PREVAILING
SETBACKS/EASEMENTS	NA
MICROCLIMATES	NA
SOIL PH	NA
LAWN AREA	28% OF TOTAL LANDSCAPE (27,139 SQ. FT.)
UNDEVELOPED	NA
PROPERTY IRRIGATION SYSTEM	AUTOMATED SYSTEM WITH SMART CONTROLLER

LANDSCAPE DATA

TOTAL SITE AREA	415,178 SQ.FT.*		9.5 ACRES
TOTAL LANDSCAPE AREA	96,139 SQ.FT.*		23%
PLANTER AREA	69,000 SQ.FT.		72%
LAWN AREA	27,139 SQ.FT.		28%
TREES ON SITE	175**		
		TOTAL REQ'D = NA	PROVIDED = 175
		DECIDUOUS REQ'D = NA	PROVIDED = 127
		EVERGREEN REQ'D = NA	PROVIDED = 48
		SHRUBS REQ'D = NA	PROVIDED = 1,404
		DROUGHT TOLERANT REQ'D = NA	
ADDITIONAL INFO	NA	DROUGHT TOLERANT PROVIDED = 1,297 (92%)	

* PARK STRIP LANDSCAPE OF 5,826 SQ.FT. NOT INCLUDED IN THIS TOTAL
** TREE/PLANTING COUNT INCLUDES OREM 3RD BUILDING SECTION OF SITE

LANDSCAPE NOTES

1. STOCKPILED, SCREENED TOPSOIL TO BE IMPLEMENTED IN ALL PLANTING AREAS AT THE FOLLOWING DEPTHS: 12" IN ALL SHRUB BEDS, 5" IN ALL LAWN AREAS.
2. LAWN TO BE A DESERT SAGE BLUEGRASS BLEND (FROM CHANSHARE SOD) AND BE IMPLEMENTED AS SOD. REFER TO SOD LAYING NOTES FOR MORE INFORMATION.
3. 6" CONCRETE MOWCURB TO BE IMPLEMENTED BETWEEN ALL SHRUB BED AND LAWN AREAS AS SHOWN ON PLAN.
4. ROCK MULCH TO BE IMPLEMENTED IN ALL PLANTER BEDS AT DEPTHS NOTED IN LEGEND. ROCK MULCH TO BE CLEAN AND FREE OF DIRT AND DEBRIS, PLACED AT A UNIFORM DEPTH AND RAKED SMOOTH. INSTALL WEED BARRIER FABRIC UNDER ALL ROCK MULCH.
5. ALL TREES TO BE STAKED AT TIME OF PLANTING. SEE DETAILS FOR SPECIFICS. REMOVE STAKING WITHIN FIRST YEAR OR WHEN TREE IS ESTABLISHED.
6. NO LANDSCAPING OR OTHER OBSTRUCTION IN EXCESS OF 3' ABOVE FINISHED GRADE SHALL BE IMPLEMENTED IN CLEAR VIEW TRIANGLES.
7. MATERIAL QUANTITIES AND COUNTS ON LEGENDS AND NOTES ARE FOR CONVENIENCE ONLY. LANDSCAPE CONTRACTOR RESPONSIBLE TO VERIFY ALL COUNTS AND QUANTITIES ON PLANS.

SOD LAYING NOTES

1. LAY SOD WITHIN 24 HOURS OF BEING LIFTED.
2. LAY SOD IN ROWS WITH JOINTS STAGGERED. BUTT SECTIONS CLOSELY WITHOUT OVERLAPPING OR LEAVING GAPS BETWEEN SECTIONS. CUT OUT IRREGULAR OR THIN SECTIONS WITH A SHARP KNIFE.
3. LAY SOD FLUSH WITH ADJOINING EXISTING SODDED OR PAVED SURFACES.
4. AFTER SODDING HAS BEEN COMPLETED, ROLL HORIZONTAL SURFACE AREAS IN TWO DIRECTIONS PERPENDICULAR TO EACH OTHER WITH A 150 POUND SOD ROLLER. REPAIR AND RE-ROLL AREAS WITH DEPRESSIONS, LUMPS OR OTHER IRREGULARITIES. HEAVY ROLLING TO CORRECT IRREGULARITIES IN GRADE IS NOT PERMITTED.
5. WATER ALL SODDED AREAS IMMEDIATELY AFTER SOD LAYING TO OBTAIN MOISTURE PENETRATION THROUGH SOD INTO TOP 4" OF TOPSOIL.
6. PROVIDE ADEQUATE PROTECTION OF SODDED AREAS AGAINST TRESPASSING, EROSION AND DAMAGE OF ANY KIND. REMOVE THIS PROTECTION AFTER SODDED AREAS HAVE BEEN ACCEPTED BY THE OWNER.
7. REPLACE DAMAGED AREAS AT NO ADDITIONAL COST TO OWNER.

GROUNDCOVERS LEGEND

SYMBOL	BOTANICAL NAME/COMMON NAME	QTY	SIZE
	ROCK MULCH TO BE 3/4" - 1" SIZE 'SOUTHTOWN' CRUSHED ROCK FROM UTAH LANDSCAPE ROCK IN NEPHI, UTAH. IMPLEMENT IN AREA SHOWN AT A 3" DEPTH OVER WEED BARRIER FABRIC.	PER PLAN	PER PLAN
RM	ROCK MULCH TO BE 2" - 4" SIZE 'OAK CREEK PLUM' COBBLE ROCK FROM UTAH LANDSCAPE ROCK IN NEPHI, UTAH. IMPLEMENT IN AREA SHOWN AT A 6" DEPTH OVER WEED BARRIER FABRIC.	PER PLAN	PER PLAN
	DESERT SAGE BLUEGRASS FROM CHANSHARE SOD FARMS. INSTALL PER SOD LAYING NOTES	SOD ROLLS	SOD ROLLS
	DECORATIVE LANDSCAPE BOULDERS SIZE: 2', 3' AND 4' BOULDERS (MATCH/COMPLIMENT DECORATIVE ROCK MULCH IN PLANTING AREAS)	PER PLAN	PER PLAN

In Site
DESIGN GROUP
Landscape Architecture Land Planning
17 North 470 West American Fork, Utah 84003
801.756.5043 www.in-sitedesigngroup.com

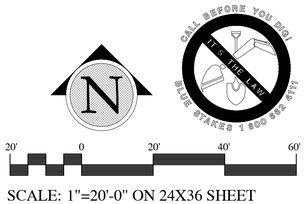

20' 0 20' 40' 60'

SCALE: 1"=20'-0" ON 24X36 SHEET

bhd ARCHITECTS
www.bhdarchitects.com
Phone 801.571.0010
Fax 801.571.0303
Toll Free 888.571.0010
65 East Wadsworth Park Drive
Suite 205 Draper, Utah 84020

LICENSED LANDSCAPE ARCHITECT # 4884514 Cory B. Whiting 8-15-2024 STATE OF UTAH

THE CHURCH OF JESUS CHRIST OF LATTER-DAY SAINTS

Springwater 9
Vineyard UT Springwater Stake
Approx. 540 South Geneva Road
Vineyard, Utah 84059

Date: 15 Aug 2024
BHD #: 2346
County Parcel: 39-228:0001
Plan Series: C300-MH-11
Owner #: 502-2004

Drawing Issue and Revision Schedule

#	Date	Description
1	15 Aug 2024	Bid Documents

LANDSCAPE PLAN

LS101

Printed: 14 Aug 2024 5:27 PM

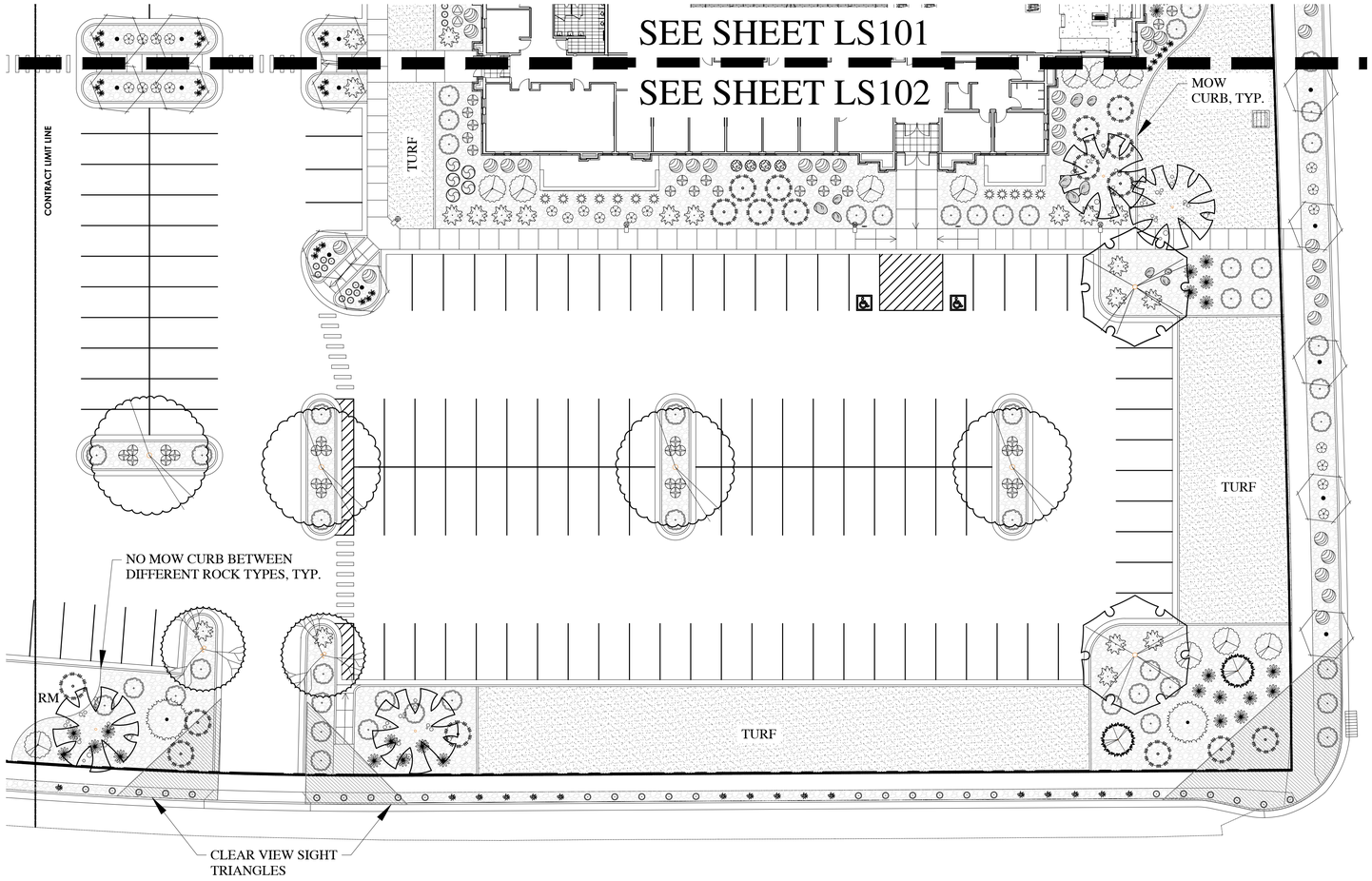

DESIGN CRITERIA

ECO-REGION	10.1 NORTHERN COLD DESERT
CLIMATE	U.S. HARDINESS ZONE 5
ZONING ORDINANCE	VINEYARD CITY
WATER AVAILABILITY	NA
SOIL TYPE	NA
SLOPES	SEE GRADING PLAN
WIND	SOUTH PREVAILING
SETBACKS/EASEMENTS	NA
MICROCLIMATES	NA
SOIL PH	NA
LAWN AREA	28% OF TOTAL LANDSCAPE (27,139 SQ. FT.)
UNDEVELOPED	NA
PROPERTY IRRIGATION SYSTEM	AUTOMATED SYSTEM WITH SMART CONTROLLER

LANDSCAPE DATA

TOTAL SITE AREA	415,178 SQ.FT.*		9.5 ACRES
TOTAL LANDSCAPE AREA	96,139 SQ.FT.*		23%
PLANTER AREA	69,000 SQ.FT.		72%
LAWN AREA	27,139 SQ.FT.		28%
TREES ON SITE	175**		
		TOTAL REQ'D = NA	PROVIDED = 175
		DECIDUOUS REQ'D = NA	PROVIDED = 127
		EVERGREEN REQ'D = NA	PROVIDED = 48
		SHRUBS REQ'D = NA	PROVIDED = 1,404
		DROUGHT TOLERANT REQ'D = NA	
ADDITIONAL INFO	NA	DROUGHT TOLERANT PROVIDED = 1,297 (92%)	

* PARK STRIP LANDSCAPE OF 5,826 SQ.FT. NOT INCLUDED IN THIS TOTAL
** TREE/PLANTING COUNT INCLUDES OREM 3RD BUILDING SECTION OF SITE

LANDSCAPE NOTES

1. STOCKPILED, SCREENED TOPSOIL TO BE IMPLEMENTED IN ALL PLANTING AREAS AT THE FOLLOWING DEPTHS: 12" IN ALL SHRUB BEDS, 5" IN ALL LAWN AREAS.
2. LAWN TO BE A DESERT SAGE BLUEGRASS BLEND (FROM CHANSHARE SOD) AND BE IMPLEMENTED AS SOD. REFER TO SOD LAYING NOTES FOR MORE INFORMATION.
3. 6" CONCRETE MOWCURB TO BE IMPLEMENTED BETWEEN ALL SHRUB BED AND LAWN AREAS AS SHOWN ON PLAN.
4. ROCK MULCH TO BE IMPLEMENTED IN ALL PLANTER BEDS AT DEPTHS NOTED IN LEGEND. ROCK MULCH TO BE CLEAN AND FREE OF DIRT AND DEBRIS, PLACED AT A UNIFORM DEPTH AND RAKED SMOOTH. INSTALL WEED BARRIER FABRIC UNDER ALL ROCK MULCH.
5. ALL TREES TO BE STAKED AT TIME OF PLANTING. SEE DETAILS FOR SPECIFICS. REMOVE STAKING WITHIN FIRST YEAR OR WHEN TREE IS ESTABLISHED.
6. NO LANDSCAPING OR OTHER OBSTRUCTION IN EXCESS OF 3' ABOVE FINISHED GRADE SHALL BE IMPLEMENTED IN CLEAR VIEW TRIANGLES.
7. MATERIAL QUANTITIES AND COUNTS ON LEGENDS AND NOTES ARE FOR CONVENIENCE ONLY. LANDSCAPE CONTRACTOR RESPONSIBLE TO VERIFY ALL COUNTS AND QUANTITIES ON PLANS.

SOD LAYING NOTES

1. LAY SOD WITHIN 24 HOURS OF BEING LIFTED.
2. LAY SOD IN ROWS WITH JOINTS STAGGERED. BUTT SECTIONS CLOSELY WITHOUT OVERLAPPING OR LEAVING GAPS BETWEEN SECTIONS. CUT OUT IRREGULAR OR THIN SECTIONS WITH A SHARP KNIFE.
3. LAY SOD FLUSH WITH ADJOINING EXISTING SODDED OR PAVED SURFACES.
4. AFTER SODDING HAS BEEN COMPLETED, ROLL HORIZONTAL SURFACE AREAS IN TWO DIRECTIONS PERPENDICULAR TO EACH OTHER WITH A 150 POUND SOD ROLLER. REPAIR AND RE-ROLL AREAS WITH DEPRESSIONS, LUMPS OR OTHER IRREGULARITIES. HEAVY ROLLING TO CORRECT IRREGULARITIES IN GRADE IS NOT PERMITTED.
5. WATER ALL SODDED AREAS IMMEDIATELY AFTER SOD LAYING TO OBTAIN MOISTURE PENETRATION THROUGH SOD INTO TOP 4" OF TOPSOIL.
6. PROVIDE ADEQUATE PROTECTION OF SODDED AREAS AGAINST TRESPASSING, EROSION AND DAMAGE OF ANY KIND. REMOVE THIS PROTECTION AFTER SODDED AREAS HAVE BEEN ACCEPTED BY THE OWNER.
7. REPLACE DAMAGED AREAS AT NO ADDITIONAL COST TO OWNER.

GROUNDCOVERS LEGEND

SYMBOL	BOTANICAL NAME/COMMON NAME	QTY	SIZE
	ROCK MULCH TO BE 3/4" - 1" SIZE 'SOUTHTOWN' CRUSHED ROCK FROM UTAH LANDSCAPE ROCK IN NEPHI, UTAH. IMPLEMENT IN AREA SHOWN AT A 3" DEPTH OVER WEED BARRIER FABRIC.	PER PLAN	PER PLAN
RM	ROCK MULCH TO BE 2" - 4" SIZE 'OAK CREEK PLUM' COBBLE ROCK FROM UTAH LANDSCAPE ROCK IN NEPHI, UTAH. IMPLEMENT IN AREA SHOWN AT A 6" DEPTH OVER WEED BARRIER FABRIC.	PER PLAN	PER PLAN
	DESERT SAGE BLUEGRASS FROM CHANSHARE SOD FARMS. INSTALL PER SOD LAYING NOTES	SOD ROLLS	SOD ROLLS
	DECORATIVE LANDSCAPE BOULDERS SIZE: 2', 3' AND 4' BOULDERS (MATCH/COMPLIMENT DECORATIVE ROCK MULCH IN PLANTING AREAS)	PER PLAN	PER PLAN

BROADLEAF DECIDUOUS LEGEND

SYMBOL	BOTANICAL NAME/COMMON NAME	QTY	SIZE
	ACER MIYABEI 'MORTON' STATE STREET STATE STREET MAPLE	8	2" CAL.
	CARPINUS CAROLINIANA 'RISING FIRE' RISING FIRE AMERICAN HORNBEAM	58	2" CAL.
	CERCIS CANADENSIS EASTERN REDBUD *	19	2" CAL.
		6	2" CAL.
	GLEDITSIA TRIACANTHOS 'IMPERIAL' IMPERIAL HONEYLOCUST	6	2" CAL.
	ZELKOVA SERRATA 'GREEN VASE' GREEN VASE ZELKOVA*	20	2" CAL.

CONIFER / EVERGREEN LEGEND

SYMBOL	BOTANICAL NAME/COMMON NAME	QTY	SIZE
	PICEA OMORIKA SERBIAN SPRUCE*	18	6-7' TALL
	PINUS NIGRA 'OREGON GREEN' OREGON GREEN PINE*	30	6-7' TALL

PERENNIAL LEGEND

SYMBOL	BOTANICAL NAME/COMMON NAME	QTY	SIZE
	HEMEROCALLIS 'STELLA D'ORO" STELLA D'ORO DAYLILY*	16	1 GAL.
	HEMEROCALLIS X 'ROSY RETURNS' ROSY RETURNS DAYLILY*	40	1 GAL.

GRASS LEGEND

SYMBOL	BOTANICAL NAME/COMMON NAME	QTY	SIZE
	CALAMAGROSTIS ACUTIFLORA 'KARL FOERSTER' FEATHER REED GRASS*	23	1 GAL.
	HELICTOTRICHON SEMPERVIRENS 'SAPPHIRE' BLUE OAT AVENA GRASS*	55	1 GAL.

SHRUB LEGEND

SYMBOL	BOTANICAL NAME/COMMON NAME	QTY	SIZE
	BUDDLEIA X 'FLUTTERBY PETITE' DWARF BUTTERFLY BUSH*	79	5 GAL.
	CERCOCARPUS INTRICATUS LITTLELEAF MOUNTAIN MAHOGANY*	12	5 GAL.
	FORSYTHIA X 'COURTASOL' GOLD TIDE FORSYTHIA	10	5 GAL.
	JUNIPERUS SABINA 'SCANDIA' SCANDIA JUNIPER*	40	5 GAL.
	PHYSOCARPUS OPULIFOLIUS 'LITTLE DEVIL' LITTLE DEVIL NINEBARK*	40	5 GAL.
	PINUS MUGO 'SLOWMOUND' SLOWMOUND MUGO PINE*	4	5 GAL.
	PRUNUS BESSEYI 'PAWNEE BUTTES' PAWNEE BUTTES SAND CHERRY*	92	5 GAL.
	RHUS AROMATICA 'GRO-LOW' GRO LOW SUMAC*	28	5 GAL.
	ROSA X 'WEKSCHNEEKOPPE' SNOW PAVEMENT RUGOSA SHRUB ROSES*	40	5 GAL.
	RIBES ALPINUM 'GREEN MOUND' GREEN MOUND CURRANT	63	5 GAL.
	SPIRAEA JAPONICA 'MAGIC CARPET' MAGIC CARPET SPIREA	6	5 GAL.
	SYMPHORICARPOS X CHENAULTII 'HANCOCK' HANCOCK CORALBERRY* (LOW-SPREADING)	31	5 GAL.

bhd ARCHITECTS
www.bhdarchitects.com
Phone 801.571.0010
Fax 801.571.0303
Toll Free 888.571.0010
65 East Wadsworth Park Drive
Suite 205 Draper, Utah 84020

LICENSED LANDSCAPE ARCHITECT # 4884514 Cory B. Whiting 8-15-2024 STATE OF UTAH

THE CHURCH OF JESUS CHRIST OF LATTER-DAY SAINTS

Springwater 9
Vineyard UT Springwater Stake
Approx. 542 South Geneva Road
Vineyard, Utah 84059

Owner #: 502-2004
Plan Series: G300-MH-1
County Parcel: 39-228:0001
BHD #: 2346
Date: 15 Aug 2024

Drawing Issue and Revision Schedule

#	Date	Description
1	15 Aug 2024	Bid Documents

In Site DESIGN GROUP
Landscape Architecture Land Planning
17 North 470 West American Fork, Utah 84003
801.756.5043 www.in-sitedesigngroup.com

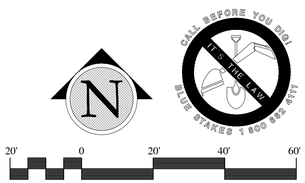

20' 0 20' 40' 60'

SCALE: 1"=20'-0" ON 24X36 SHEET

LANDSCAPE PLAN

LS102

Printed: 14 Aug 2024 5:27 PM

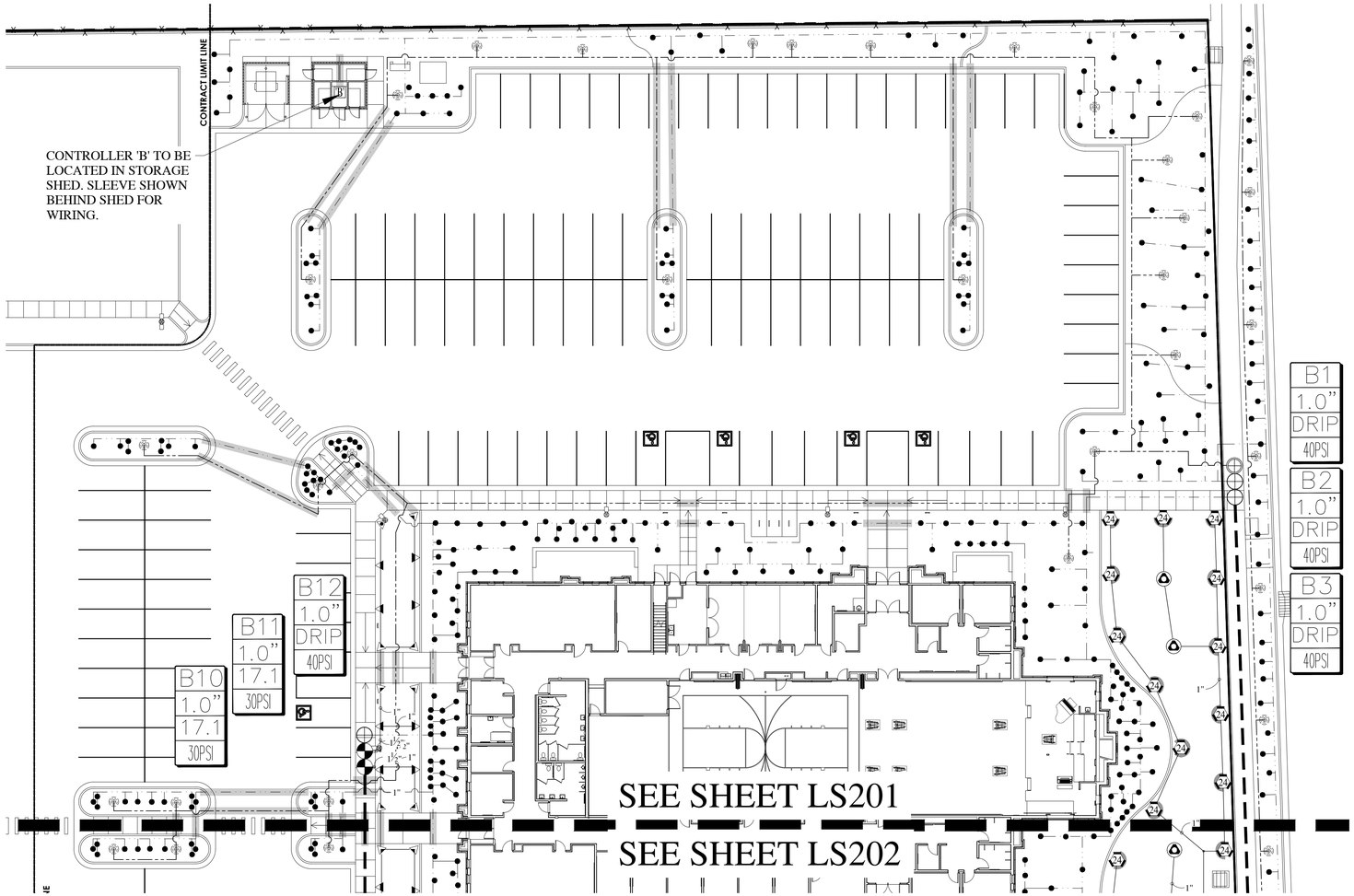

IRRIGATION NOTES

1. ALL WORK SHALL BE IN ACCORDANCE WITH APPLICABLE CITY AND/OR COUNTY CODES. THE CONTRACTOR SHALL APPLY AND PAY FOR ALL NECESSARY PERMITS.
2. CONTRACTOR SHALL HAVE ALL UTILITIES BLUE STAKED BEFORE DIGGING. ANY DAMAGE TO THE UTILITIES SHALL BE REPAIRED AT THE EXPENSE OF CONTRACTOR WITH NO EXTRA COST TO THE OWNER.
3. PROVIDE AN AS-BUILT, REPRODUCIBLE DRAWING TO OWNER SHOWING ALL DRAINS, HEADS, VALVES, AND PIPES. PROVIDE INSTRUCTIONS TO MAINTENANCE PERSONNEL FOR WINTERIZATION. SPRINKLER SYSTEM TO BE BLOWN OUT WITH AN AIR COMPRESSOR EACH FALL.
4. CONTRACTOR IS RESPONSIBLE FOR ENSURING ACCURATE COUNTS AND QUANTITIES OF ALL IRRIGATION MATERIALS FOR BIDDING AND INSTALLATION PURPOSES.
5. CONTRACTOR SHALL BUILD IRRIGATION SYSTEM WITH HEAD TO HEAD COVERAGE FOR ALL LAWN AREAS. HE-VAN AND/OR U-SERIES NOZZLES SHALL BE USED WHERE NECESSARY TO PROVIDED HEAD TO HEAD COVERAGE AND/OR TO MINIMIZE OVER SPRAY ONTO STREETS, SIDEWALKS AND/OR BUILDINGS.
6. LANDSCAPE CONTRACTOR (L.C.) SHALL PROVIDE AND INSTALL SLEEVES FOR ALL PIPES AND WIRES UNDER PAVEMENT AND SIDEWALKS. SLEEVES SHALL BE 2 SIZES LARGER THAN PIPE INSIDE. ALL WIRE SHALL BE IN SEPARATE SLEEVES (NOT SHOWN). PLACE JUNCTION BOXES WHERE NECESSARY TO MINIMIZE LONG RUNS OR AT DIRECTIONAL CHANGES AS NECESSARY.
7. ALL SLEEVES INSTALLED SHALL BE DUCT TAPED TO PREVENT DIRT OR OTHER DEBRIS ENTERING PIPE. ALL SLEEVES SHALL BE IDENTIFIED BY WOOD OR PVC STAKES AND BE SPRAY PAINTED WITH MARKING PAINT. REMOVE STAKES ONCE IRRIGATION SYSTEM IS COMPLETE.
8. MAIN LINE SHALL BE 1.5" (UNLESS OTHERWISE DIRECTED). LATERAL LINES SHALL BE NO SMALLER THAN 1". PIPES SHALL CARRY NO MORE THAN THE FOLLOWING: 1" PIPE MAX. 13 GPM, 1-1/2" PIPE MAX. 30 GPM. ADJUST LOCATION OF MAINLINE AND LATERAL LINES AS NECESSARY IN ORDER TO AVOID PLACING BOULDERS, TREES AND SHRUBS DIRECTLY OVER MAINLINE AND LATERAL LINES.
9. MAIN LINES SHALL BE 18" DEEP MIN. AND LATERAL LINES 12" DEEP MIN. NO ROCK GREATER THAN 3/4" DIAMETER SHALL BE ALLOWED IN TRENCHES.
10. PLACE PIPES, VALVE BOXES AND ALL OTHER SPRINKLER CONSTRUCTION IN LANDSCAPE AREAS. ALL PIPES SHALL BE ON PROPERTY OF OWNER. MODIFY LOCATION OF VALVE BOXES AS NECESSARY IN ORDER TO AVOID TREES AND SHRUBS PER PLANTING PLAN. USE GREEN BOXES IN LAWN AREAS. USE TAN BOXES IN BED AREAS.
11. LANDSCAPE ARCHITECT SHALL VISUALLY INSPECT ALL TRENCHES PRIOR TO BACKFILLING. CONTRACTOR SHALL GIVE LANDSCAPE ARCHITECT MIN. 72 HR. NOTICE BEFORE INSPECTION IS TO BE MADE. CONTRACTOR SHALL PRESSURE TEST MAINLINE FOR LEAKS PRIOR TO BACKFILLING.
12. ALL SPRINKLERS SHALL BE ADJUSTED ON-SITE AS NECESSARY TO AVOID ANY WATER SPRAYING ONTO STREETS, SIDEWALKS AND/OR BUILDINGS.
13. ACTUAL INSTALLATION OF IRRIGATION SYSTEM MAY VARY SOMEWHAT FROM PLANS. CONTRACTOR IS RESPONSIBLE TO MAKE NECESSARY ADJUSTMENTS TO ENSURE PROPER COVERAGE OF ALL LANDSCAPED AREAS.
14. LANDSCAPE CONTRACTOR SHALL MATCH PRECIPITATION RATES AS MUCH AS POSSIBLE FOR ALL LANDSCAPED AREAS.
15. INSTALL ALL HEADS 2" AWAY FROM ALL WALKS AND WALLS. VALVE BOXES SHALL BE INSTALLED SQUARED TO AND 6" MIN. AWAY FROM WALKS AND WALLS.
16. CONTRACTOR TO INSTALL NETAFIM TECHLINE CV TUBING ON-SURFACE DRIP LINE FOR TREES.
17. POWER TO CONTROLLER TO BE PROVIDED BY ELECTRICAL CONTRACTOR. OWNER TO SPECIFY EXACT LOCATION OF CONTROLLER. IF MOUNTED OUTSIDE, CONTROLLER TO BE MOUNTED IN WEATHERPROOF LOCKING WALL MOUNTED CABINET PER MANUFACTURERS INSTRUCTIONS. LANDSCAPE CONTRACTOR SHALL ENSURE THE CONTROLLER IS GROUNDED PER LOCAL CODE AND PER MANUFACTURER SPEC.
18. IF THE STATIC PRESSURE AT THE POINT OF CONNECTION EXCEEDS 100 PSI, INSTALL A BRASS PRESSURE REDUCER IN-LINE WITH THE RPZ PER MANUFACTURER SPECS. INSTALL THE RPZ AND PRESSURE REDUCER IN A LOCKING METAL CABINET. ADJUST PRESSURE AS REQUIRED FOR NORMAL OPERATION OF THE IRRIGATION SYSTEM.
19. VALVE CONTROL WIRING SHALL BE 14 GAUGE COPPER SINGLE STRAND WIRE. WIRE SHALL BE WHITE FOR COMMON AND COLOR FOR CONTROL.
20. INSTALL THE PRS-D OPTION FOR SPRAY VALVES IF THE STATIC PRESSURE AT SPRAY HEADS EXCEEDS 70 PSI. INSTALL THE PRS-D OPTION FOR ROTOR VALVES IF THE STATIC PRESSURE AT ROTOR EXCEEDS 75 PSI.

IRRIGATION LEGEND

SYMBOL	MANUFACTURER-MODEL NUMBER	PAT.	RD.	PSI	GPM Q	T	H	TT	TQ	F	DRIP GPH	DETAILS	REMARKS
●	RAINBIRD XB-PC	FULL	--	40	--	--	--	--	--	--	2.0	18	SEE LEGEND BELOW FOR
⊛	DRIPLINE: NETAFIM TLCV-09-12	FULL	--	40	--	--	--	--	--	--	.9/12"	15-17	ADDITIONAL INFORMATION.
▲	RAIN BIRD 1806-P45 POP-UP ROTARY 18	FULL	13' - 18'	45	.5	--	--	--	--	1.85	--	20-21	ADJUST NOZZLES AS
◆	RAIN BIRD 1806-P45 POP-UP ROTARY 24	Q,H,F	17' - 24'	45	.84	--	1.68	--	--	3.48	--	20-21	NEEDED TO KEEP WATER
▽	RAINBIRD 1806-PRS POP-UP W/15 SERIES NOZZLE	Q,T,H	15'	30	.92	1.23	1.85	--	--	--	--	20-21	OFF SIDEWALK, ASPHALT
▽	RAIN BIRD 5006-PL-R-SS 25 MPR SERIES NOZZLES	Q,H,F	25'	45	1.00	--	1.98	--	--	3.82	--	22-22	AND BUILDING.
▽	RAIN BIRD 5006-PL-R-SS 35 MPR SERIES NOZZLES	Q,H,F	35'	45	1.92	--	3.81	--	--	--	--	22-22	
'B'	CONTROLLER: WEATHERTRAK ET PRO3 (WTPRO3-C-12-CWM)											5-7	COORDINATE LOCATION WITH OWNER
◉	1" RAINBIRD QUICK COUPLER VALVE, MODEL 44-LRC											10	IN 10" RND. VALVE BOX
⊠	1-1/2" WILKENS 375B RPZ BACKFLOW PREVENTOR IN GUARDSHACK ENCLOSURE											4,11	IN STRONGBOX ENCLOSURE
⊕	REMOTE CONTROL VALVE: RAINBIRD PEB-PRS-D AUTOMATIC CONTROL VALVE; SIZE PER PLAN											13	JUMBO VALVE BOX
⊕	DRIP CONTROL ZONE KIT: RAINBIRD XCZ-100-PRB-COM PER PLANS											14	JUMBO VALVE BOX
⊕	DRIP CONTROL ZONE KIT: RAINBIRD XCZ-100-PRB-COM PER PLANS (FOR TREES)											14	JUMBO VALVE BOX
⋈	1-1/2" STOP & WASTE TO BE INSTALLED BY GENERAL CONTRACTOR. SEE CIVIL DRAWINGS.											4,11	BY GENERAL CONTRACTOR
⊙	HYDROMETER: NETAFIM LHM15TG1-MEL (WITH PE-39 FLOW SENSOR CABLE PER WEATHERTRAK SPECS.)											4,9,11	REFERENCE DETAILS
⊗	DRAIN VALVE: GRACO WELD TOP											5, 7	REFERENCE DETAILS
▬ ▬ ▬	MAINLINE: 1-1/2" SCH 40 PVC OR OTHERWISE NOTED.											1, 2	REFERENCE DETAILS
———	LATERAL LINE FOR ROTORS AND/OR SPRAYS: SCHEDULE 40 PVC											1, 2	REFERENCE DETAILS
- - - -	TREE DRIP LATERAL LINE (SIZE AS REQUIRED)											1,2,15,17-18	REFERENCE DETAILS
— · — · —	SHRUB DRIP LATERAL LINE (SIZE AS REQUIRED)											1,2,15,17-18	REFERENCE DETAILS
	SLEEVE (SIZE TO MIN. 2X DIA. OF PIPE WITHIN THE SLEEVE). ADD ADDITIONAL SLEEVES AS REQ.											3	REFERENCE DETAILS
NOT SHOWN	WIRE CHASE, SIZE TO BE TWICE THE DIA. OF THE WIRE BUNDLE WITHIN DOWN TO 1" DIA. MIN.											1,2	REFERENCE DETAILS
NOT SHOWN	14 GAUGE SOLID COPPER SINGLE STRAND WIRE.											1,2	REFERENCE DETAILS

DRIP EMITTER LEGEND

PLANT TYPE	EMITTER QTY	EMITTER TYPE
PERENNIALS/GRASSES	1	XB-20 (2GPH)
ALL SHRUBS	1	XB-20 (2GPH)
TREES IN PLANTER AREAS	1	XB-10 (1GPH)

NOTE:
1. EMITTERS LISTED ARE AVAILABLE FROM GPH AND RAINBIRD.
2. EMITTERS ARE NOT NECESSARY FOR TREES IN LAWN AREAS.
3. INSTALL NETAFIM TLCV IN ADDITION TO XB-10 EMITTERS PER DETAILS ON SHEET LS402.

VALVE ID TAG

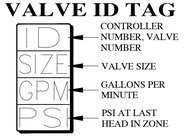

In Site DESIGN GROUP
Landscape Architecture Land Planning
17 North 470 West American Fork, Utah 84003
801.756.5043 www.in-sitedesigngroup.com

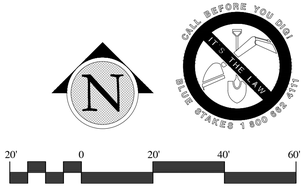

20' 0 20' 40' 60'

SCALE: 1"=20'-0" ON 24X36 SHEET

bhd ARCHITECTS
www.bhdarchitects.com
Phone 801.571.0010
Fax 801.571.0303
Toll Free 888.571.0010
65 East Wadsworth Park Drive
Suite 205 Draper, Utah 84020

LICENSED LANDSCAPE ARCHITECTS # 4884514 Cory B. Whiting 8-15-2024 STATE OF UTAH

THE CHURCH OF JESUS CHRIST OF LATTER-DAY SAINTS

Springwater 9
Vineyard UT Springwater Stake
Approx. 542 South Geneva Road
Vineyard, Utah 84059

Owner #: 502-2004
Plan Series: G300-MH-1-1
County Parcel: 39:228:0001
BHD #: 2346
Date: 15 Aug 2024

Drawing Issue and Revision Schedule

#	Date	Description
1	15 Aug 2024	Bid Documents

IRRIGATION PLAN

LS201

Printed: 14 Aug 2024 5:27 PM

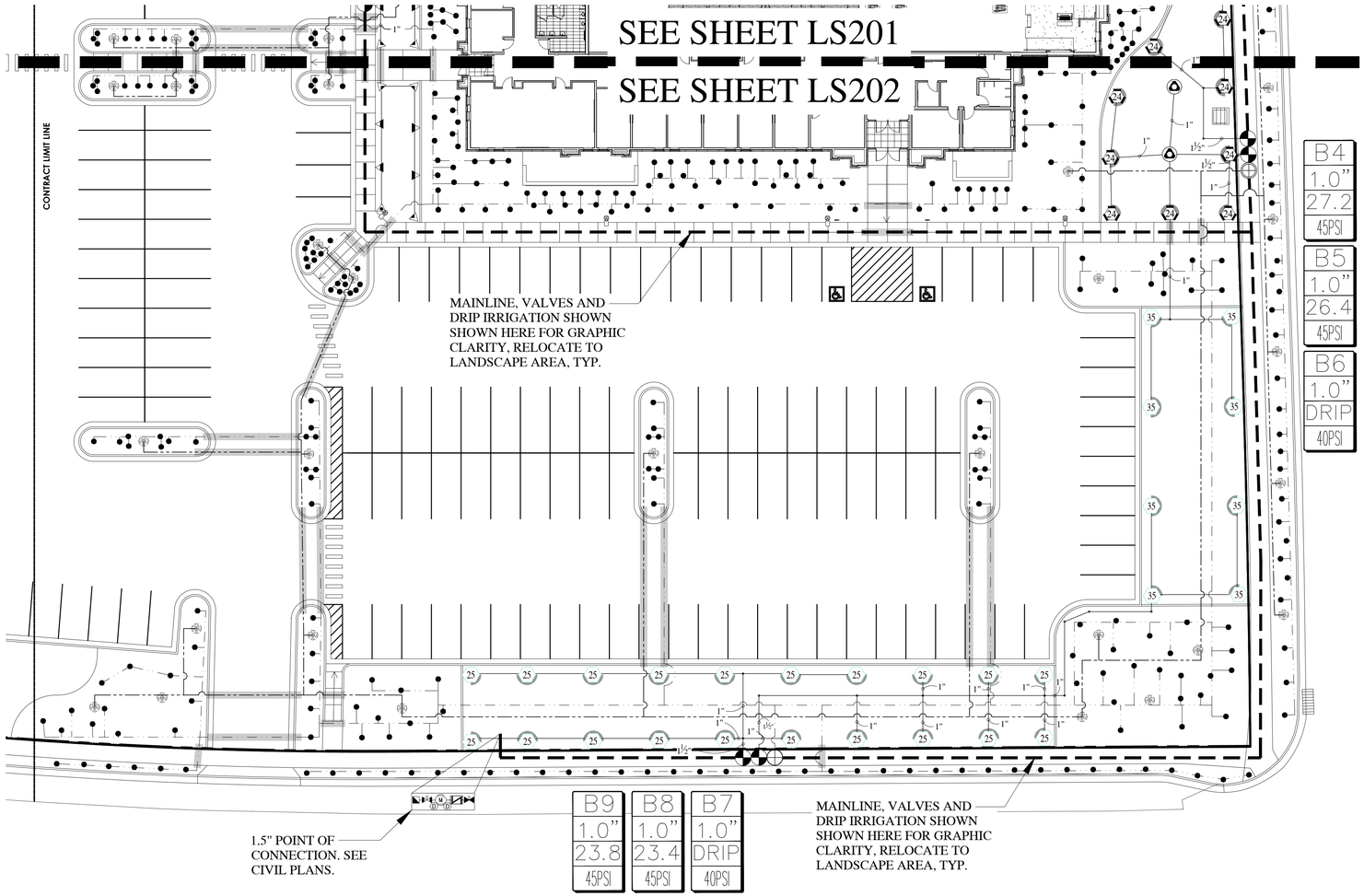

IRRIGATION NOTES

1. ALL WORK SHALL BE IN ACCORDANCE WITH APPLICABLE CITY AND/OR COUNTY CODES. THE CONTRACTOR SHALL APPLY AND PAY FOR ALL NECESSARY PERMITS.
2. CONTRACTOR SHALL HAVE ALL UTILITIES BLUE STAKED BEFORE DIGGING. ANY DAMAGE TO THE UTILITIES SHALL BE REPAIRED AT THE EXPENSE OF CONTRACTOR WITH NO EXTRA COST TO THE OWNER.
3. PROVIDE AN AS-BUILT, REPRODUCIBLE DRAWING TO OWNER SHOWING ALL DRAINS, HEADS, VALVES, AND PIPES. PROVIDE INSTRUCTIONS TO MAINTENANCE PERSONNEL FOR WINTERIZATION. SPRINKLER SYSTEM TO BE BLOWN OUT WITH AN AIR COMPRESSOR EACH FALL.
4. CONTRACTOR IS RESPONSIBLE FOR ENSURING ACCURATE COUNTS AND QUANTITIES OF ALL IRRIGATION MATERIALS FOR BIDDING AND INSTALLATION PURPOSES.
5. CONTRACTOR SHALL BUILD IRRIGATION SYSTEM WITH HEAD TO HEAD COVERAGE FOR ALL LAWN AREAS. HE-VAN AND/OR U-SERIES NOZZLES SHALL BE USED WHERE NECESSARY TO PROVIDED HEAD TO HEAD COVERAGE AND/OR TO MINIMIZE OVER SPRAY ONTO STREETS, SIDEWALKS AND/OR BUILDINGS.
6. LANDSCAPE CONTRACTOR (L.C.) SHALL PROVIDE AND INSTALL SLEEVES FOR ALL PIPES AND WIRES UNDER PAVEMENT AND SIDEWALKS. SLEEVES SHALL BE 2 SIZES LARGER THAN PIPE INSIDE. ALL WIRE SHALL BE IN SEPARATE SLEEVES (NOT SHOWN). PLACE JUNCTION BOXES WHERE NECESSARY TO MINIMIZE LONG RUNS OR AT DIRECTIONAL CHANGES AS NECESSARY.
7. ALL SLEEVES INSTALLED SHALL BE DUCT TAPED TO PREVENT DIRT OR OTHER DEBRIS ENTERING PIPE. ALL SLEEVES SHALL BE IDENTIFIED BY WOOD OR PVC STAKES AND BE SPRAY PAINTED WITH MARKING PAINT. REMOVE STAKES ONCE IRRIGATION SYSTEM IS COMPLETE.
8. MAIN LINE SHALL BE 1.5" (UNLESS OTHERWISE DIRECTED). LATERAL LINES SHALL BE NO SMALLER THAN 1". PIPES SHALL CARRY NO MORE THAN THE FOLLOWING: 1" PIPE MAX. 13 GPM, 1-1/2" PIPE MAX. 30 GPM. ADJUST LOCATION OF MAINLINE AND LATERAL LINES AS NECESSARY IN ORDER TO AVOID PLACING BOULDERS, TREES AND SHRUBS DIRECTLY OVER MAINLINE AND LATERAL LINES.
9. MAIN LINES SHALL BE 18" DEEP MIN. AND LATERAL LINES 12" DEEP MIN. NO ROCK GREATER THAN 3/4" DIAMETER SHALL BE ALLOWED IN TRENCHES.
10. PLACE PIPES, VALVE BOXES AND ALL OTHER SPRINKLER CONSTRUCTION IN LANDSCAPE AREAS. ALL PIPES SHALL BE ON PROPERTY OF OWNER. MODIFY LOCATION OF VALVE BOXES AS NECESSARY IN ORDER TO AVOID TREES AND SHRUBS PER PLANTING PLAN. USE GREEN BOXES IN LAWN AREAS. USE TAN BOXES IN BED AREAS.
11. LANDSCAPE ARCHITECT SHALL VISUALLY INSPECT ALL TRENCHES PRIOR TO BACKFILLING. CONTRACTOR SHALL GIVE LANDSCAPE ARCHITECT MIN. 72 HR. NOTICE BEFORE INSPECTION IS TO BE MADE. CONTRACTOR SHALL PRESSURE TEST MAINLINE FOR LEAKS PRIOR TO BACKFILLING.
12. ALL SPRINKLERS SHALL BE ADJUSTED ON-SITE AS NECESSARY TO AVOID ANY WATER SPRAYING ONTO STREETS, SIDEWALKS AND/OR BUILDINGS.
13. ACTUAL INSTALLATION OF IRRIGATION SYSTEM MAY VARY SOMEWHAT FROM PLANS. CONTRACTOR IS RESPONSIBLE TO MAKE NECESSARY ADJUSTMENTS TO ENSURE PROPER COVERAGE OF ALL LANDSCAPED AREAS.
14. LANDSCAPE CONTRACTOR SHALL MATCH PRECIPITATION RATES AS MUCH AS POSSIBLE FOR ALL LANDSCAPED AREAS.
15. INSTALL ALL HEADS 2" AWAY FROM ALL WALKS AND WALLS. VALVE BOXES SHALL BE INSTALLED SQUARED TO AND 6" MIN. AWAY FROM WALKS AND WALLS.
16. CONTRACTOR TO INSTALL NETAFIM TECHLINE CV TUBING ON-SURFACE DRIP LINE FOR TREES.
17. POWER TO CONTROLLER TO BE PROVIDED BY ELECTRICAL CONTRACTOR. OWNER TO SPECIFY EXACT LOCATION OF CONTROLLER. IF MOUNTED OUTSIDE, CONTROLLER TO BE MOUNTED IN WEATHERPROOF LOCKING WALL MOUNTED CABINET PER MANUFACTURERS INSTRUCTIONS. LANDSCAPE CONTRACTOR SHALL ENSURE THE CONTROLLER IS GROUNDED PER LOCAL CODE AND PER MANUFACTURER SPEC.
18. IF THE STATIC PRESSURE AT THE POINT OF CONNECTION EXCEEDS 100 PSI, INSTALL A BRASS PRESSURE REDUCER IN-LINE WITH THE RPZ PER MANUFACTURER SPECS. INSTALL THE RPZ AND PRESSURE REDUCER IN A LOCKING METAL CABINET. ADJUST PRESSURE AS REQUIRED FOR NORMAL OPERATION OF THE IRRIGATION SYSTEM.
19. VALVE CONTROL WIRING SHALL BE 14 GAUGE COPPER SINGLE STRAND WIRE. WIRE SHALL BE WHITE FOR COMMON AND COLOR FOR CONTROL.
20. INSTALL THE PRS-D OPTION FOR SPRAY VALVES IF THE STATIC PRESSURE AT SPRAY HEADS EXCEEDS 70 PSI. INSTALL THE PRS-D OPTION FOR ROTOR VALVES IF THE STATIC PRESSURE AT ROTOR EXCEEDS 75 PSI.

IRRIGATION LEGEND

SYMBOL	MANUFACTURER-MODEL NUMBER	PAT.	RD.	PSI	GPM Q	T	H	TT	TQ	F	DRIP GPH	DETAILS	REMARKS
●	RAINBIRD XB-PC	FULL	--	40	--	--	--	--	--	--	2.0	18	SEE LEGEND BELOW FOR
(RB)	DRIPLINE: NETAFIM TLCV-09-12	FULL	--	40	--	--	--	--	--	--	.9/12"	15-17	ADDITIONAL INFORMATION.
▲	RAIN BIRD 1806-P45 POP-UP ROTARY 18	FULL	13' - 18'	45	.5	--	--	--	--	1.85	--	20-21	ADJUST NOZZLES AS
▲ ▲ ▲	RAIN BIRD 1806-P45 POP-UP ROTARY 24	Q,H,F	17' - 24'	45	.84	--	1.68	--	--	3.48	--	20-21	NEEDED TO KEEP WATER
▽ ▽ ▽	RAINBIRD 1806-PRS POP-UP W/15 SERIES NOZZLE	Q,T,H	15'	30	.92	1.23	1.85	--	--	--	--	20-21	OFF SIDEWALK, ASPHALT
25 25 25	RAIN BIRD 5006-PL-R-SS 25 MPR SERIES NOZZLES	Q,H,F	25'	45	1.00	--	1.98	--	--	3.82	--	22-22	AND BUILDING.
35 35 35	RAIN BIRD 5006-PL-R-SS 35 MPR SERIES NOZZLES	Q,H,F	35'	45	1.92	--	3.81	--	--	--	--	22-22	
B	CONTROLLER: WEATHERTRAK ET PRO3 (WTPRO3-C-12-CWM)											5-7	COORDINATE LOCATION WITH OWNER
◉	1" RAINBIRD QUICK COUPLER VALVE, MODEL 44-LRC											10	IN 10" RND. VALVE BOX
⊠	1-1/2" WILKENS 375B RPZ BACKFLOW PREVENTOR IN GUARDSHACK ENCLOSURE.											4,11	IN STRONGBOX ENCLOSURE
⊕	REMOTE CONTROL VALVE: RAINBIRD PEB-PRS-D AUTOMATIC CONTROL VALVE; SIZE PER PLAN											13	JUMBO VALVE BOX
⊕	DRIP CONTROL ZONE KIT: RAINBIRD XCZ-100-PRB-COM PER PLANS											14	JUMBO VALVE BOX
⊕	DRIP CONTROL ZONE KIT: RAINBIRD XCZ-100-PRB-COM PER PLANS (FOR TREES)											14	JUMBO VALVE BOX
⋈	1-1/2" STOP & WASTE TO BE INSTALLED BY GENERAL CONTRACTOR, SEE CIVIL DRAWINGS.											4,11	BY GENERAL CONTRACTOR
⊙	HYDROMETER: NETAFIM LHM15TG1-MEL (WITH PE-39 FLOW SENSOR CABLE PER WEATHERTRAK SPECS.)											4,9,11	REFERENCE DETAILS
⊗	DRAIN VALVE: GRACO WELD TOP											5, 7	REFERENCE DETAILS
▬ ▬ ▬	MAINLINE: 1-1/2" SCH 40 PVC OR OTHERWISE NOTED.											1, 2	REFERENCE DETAILS
———	LATERAL LINE FOR ROTORS AND/OR SPRAYS: SCHEDULE 40 PVC											1, 2	REFERENCE DETAILS
- - - -	TREE DRIP LATERAL LINE (SIZE AS REQUIRED)											1,2,15,17-18	REFERENCE DETAILS
— — —	SHRUB DRIP LATERAL LINE (SIZE AS REQUIRED)											1,2,15,17-18	REFERENCE DETAILS
	SLEEVE (SIZE TO MIN. 2X DIA. OF PIPE WITHIN THE SLEEVE). ADD ADDITIONAL SLEEVES AS REQ.											3	REFERENCE DETAILS
NOT SHOWN	WIRE CHASE. SIZE TO BE TWICE THE DIA. OF THE WIRE BUNDLE WITHIN DOWN TO 1" DIA. MIN.											1,2	REFERENCE DETAILS
NOT SHOWN	14 GAUGE SOLID COPPER SINGLE STRAND WIRE.											1,2	REFERENCE DETAILS

DRIP EMITTER LEGEND

PLANT TYPE	EMITTER QTY	EMITTER TYPE
PERENNIALS/GRASSES	1	XB-20 (2GPH)
ALL SHRUBS	1	XB-20 (2GPH)
TREES IN PLANTER AREAS	1	XB-10 (1GPH)

NOTE:
1. EMITTERS LISTED ARE AVAILABLE FROM GPH AND RAINBIRD.
2. EMITTERS ARE NOT NECESSARY FOR TREES IN LAWN AREAS.
3. INSTALL NETAFIM TLCV IN ADDITION TO XB-10 EMITTERS PER DETAILS ON SHEET LS402.

VALVE ID TAG

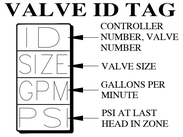

In Site DESIGN GROUP
Landscape Architecture Land Planning
17 North 470 West American Fork, Utah 84003
801.756.5043 www.in-sitedesigngroup.com

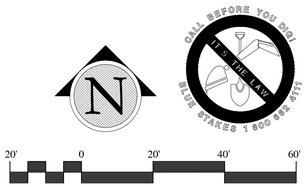

20' 0 20' 40' 60'

SCALE: 1"=20'-0" ON 24X36 SHEET

bhd ARCHITECTS
www.bhdarchitects.com
Phone 801.571.0010
Fax 801.571.0303
Toll Free 888.571.0010
65 East Wadsworth Park Drive
Suite 205 Draper, Utah 84020

LICENSED LANDSCAPE ARCHITECT # 4884514 Cory B. Whiting 8-15-2024 STATE OF UTAH

THE CHURCH OF JESUS CHRIST OF LATTER-DAY SAINTS

Springwater 9
Vineyard UT Springwater Stake
Approx. 542 South Geneva Road
Vineyard, Utah 84059

Owner #: 502-2004
Plan Series: G300-MH-11
County Parcel: 39-228:0001
BHD #: 2346
Date: 15 Aug 2024

Drawing Issue and Revision Schedule

#	Date	Description
1	15 Aug 2024	Bid Documents

IRRIGATION PLAN

LS202

Printed: 14 Aug 2024 5:27 PM

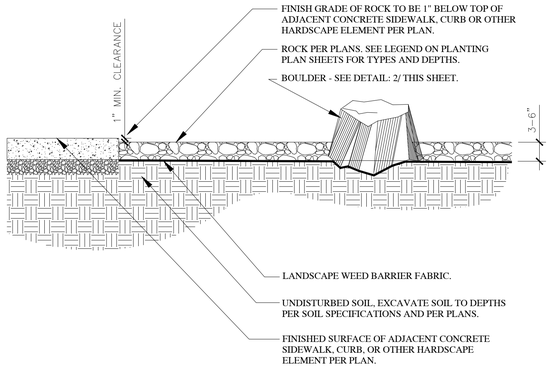

NOTES:
1. ROCK SHALL BE SCREENED & DOUBLE WASHED AND BE FREE OF DEBRIS PRIOR TO INSTALLATION. IF ROCK SUPPLIER DOES NOT HAVE A WASH PLANT, THE LANDSCAPE CONTRACTOR SHALL STILL BE RESPONSIBLE FOR DOUBLE WASHING ALL ROCK AND BOULDERS PRIOR TO INSTALLATION.
2. INSTALL PRE-EMERGENT HERBICIDE TO THE TOP OF THE FABRIC AFTER INSTALLING PLANTS AND PRIOR TO INSTALLING MULCH. AFTER INSTALLATION OF THE MULCH THE CONTRACTOR SHALL EVENLY BROADCAST A SECOND APPLICATION OF SLOW-RELEASE PRE-EMERGENT HERBICIDE. APPLY PRE-EMERGENT HERBICIDE PER MANUFACTURERS RECOMMENDATIONS.
3. KEEP TOP OF ROCK 1"-1½" BELOW ADJACENT WALKS AND CURBS. DO NOT ALLOW ROCK TO TOUCH THE TRUNK OF ANY PLANT. INSTALL ROCK AFTER INSTALLATION OF WEED BARRIER FABRIC AND PLANT MATERIAL.
4. CONTRACTOR TO ENSURE THAT TOP OF WEED BARRIER FABRIC IS FREE OF SOILS AND DEBRIS PRIOR TO PLACING ROCK.
5. SEE LANDSCAPE PLANS FOR ROCK TYPE AND DEPTH.

WEED FABRIC NOTE:
INSTALL 6" SOIL STAPLE IN WEED BARRIER FABRIC AT 5' O.C. TRIANGULAR SPACING. INSTALL 6" SOIL STAPLE AT 12" O.C. ALONG ALL WEED BARRIER FABRIC SEAMS. OVERLAP FABRIC MIN. OF 6" AT ALL SEAMS AS SHOWN BELOW. INSTALL SOIL STAPLE 6' O.C. ALONG EDGES & 2 AT EACH CORNER.

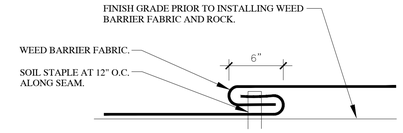

1 ROCK AND WEED BARRIER FABRIC WITH BOULDER
SCALE: NTS

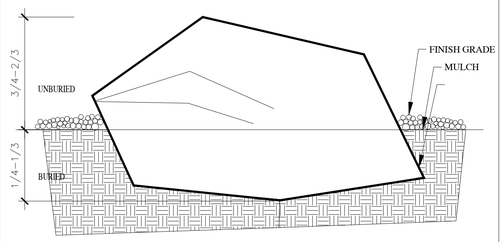

2 BOULDER PLACEMENT DETAIL
SCALE: NTS

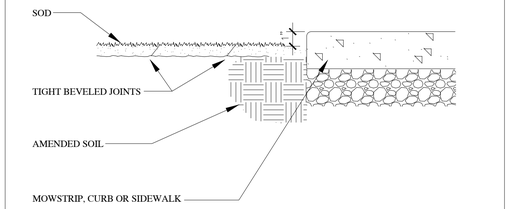

3 SOD INSTALLATION
SCALE: NTS

NOTES:
1. MOWSTRIP TO BE CAST-IN-PLACE AND POURED USING TYPICAL WEIGHT STRUCTURAL CONCRETE.
2. CONTRACTOR TO ENSURE POSITIVE DRAINAGE AROUND MOWSTRIPS-DO NOT CREATE A DAM EFFECT WITH PLACEMENT OF MOWSTRIP.
3. MAXIMUM 1/2" WIDTH VARIATION.
4. PRECISELY FOLLOW LAYOUT AS SHOWN ON MOWSTRIP/EDGING PLAN.

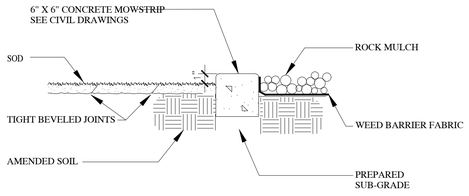

4 CONCRETE MOWSTRIP
SCALE: NTS

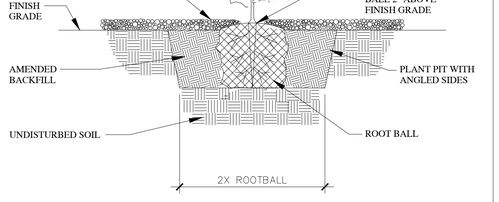

5 SHRUB PLANTING
SCALE: NTS

NOTE:
DO NOT USE ROCK MULCH IN LAWN AREAS.

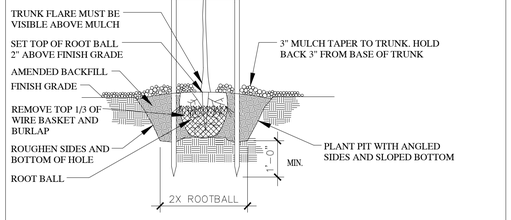

6 TREE PLANTING AND STAKING
SCALE: NTS

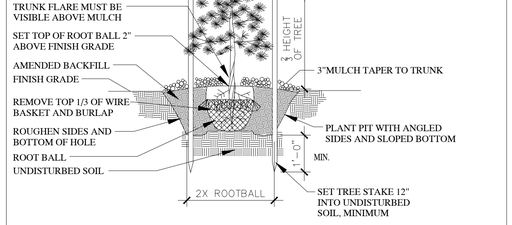

7 CONIFER PLANTING AND STAKING
SCALE: NTS

bhd ARCHITECTS
www.bhdarchitects.com
Phone 801.571.0010
Fax 801.571.0303
Toll Free 888.571.0010
65 East Wadsworth Park Drive
Suite 205 Draper, Utah 84020

LICENSED LANDSCAPE ARCHITECT # 4884514 Cory B. Whiting 8-15-2024 STATE OF UTAH

THE CHURCH OF JESUS CHRIST OF LATTER-DAY SAINTS

Springwater 9
Vineyard UT Springwater Stake
Approx. 542 South Geneva Road
Vineyard, Utah 84059

Date: 15 Aug 2024
BHD #: 2346
County Parcel: 39-228-0001
Plan Series: G300-MH-11
Owner #: 502-2004

Drawing Issue and Revision Schedule

#	Date	Description
1	15 Aug 2024	Bid Documents

LANDSCAPE DETAILS

LS301

In Site DESIGN GROUP
Landscape Architecture Land Planning
17 North 470 West American Fork, Utah 84003
801.756.5043 www.in-sitedesigngroup.com

Printed: 14 Aug 2024 5:27 PM

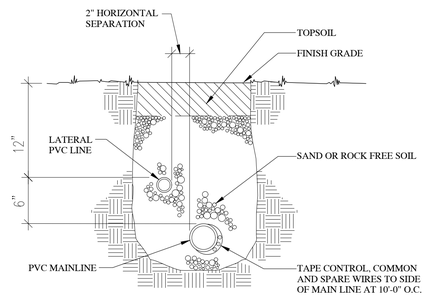

1 TRENCH SECTION - CONVENTIONAL WIRE SYS.

SCALE: NTS

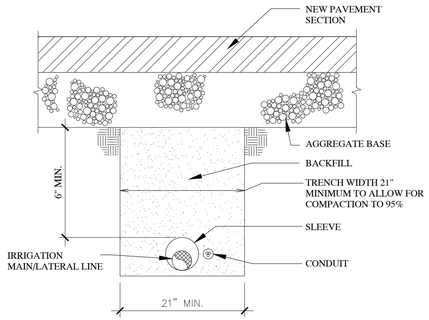

2 MISC. PIPE TRENCH: NEW PAVEMENT AREAS

SCALE: NTS

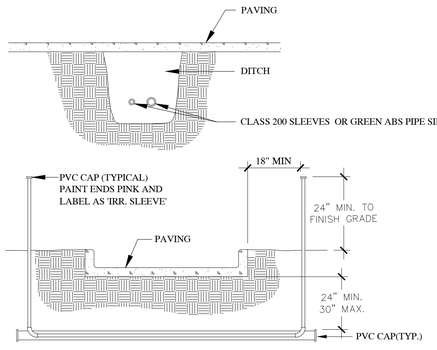

NOTE:
1. WHERE THERE IS MORE THAN ONE SLEEVE, EXTEND THE SMALLER SLEEVE TO 24-INCHES MINIMUM ABOVE FINISH GRADE.
2. ALL SLEEVES INSTALLED SHALL BE DUCT TAPED TO PREVENT DIRT OR OTHER DEBRIS ENTERING PIPE. ALL SLEEVES SHALL BE IDENTIFIED BY WOOD OR PVC STAKES AND BE SPRAY PAINTED WITH MARKING PAINT. REMOVE STAKES ONCE IRRIGATION SYSTEM IS COMPLETE.

3 SLEEVING

SCALE: NTS

NOTE:
INSTALL ISOLATION VALVE AFTER THE HYDROMETER AND BEFORE THE QUICK COUPLER. THE HYDROMETER IS TO BE DRAINED MANUALLY.

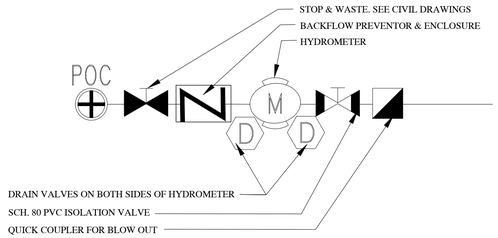

4 POC W/BACKFLOW SCHEMATIC LAYOUT

SCALE: NTS

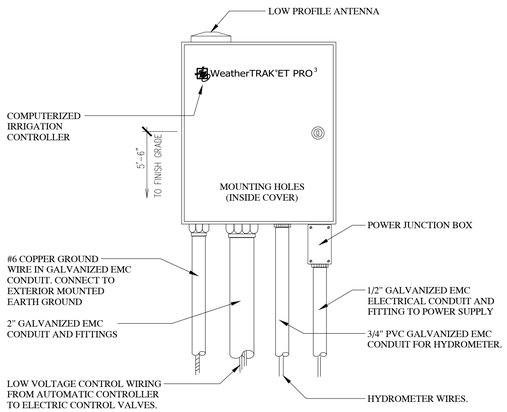

5 SMART CONTROLLER - WEATHER TRAK

SCALE: NTS

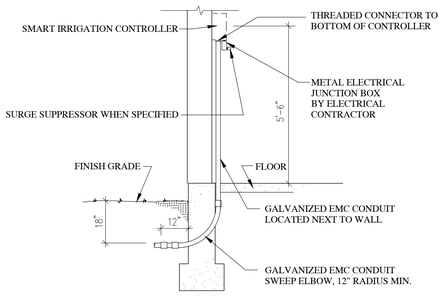

6 IRRIGATION CONTROLLER - INTERIOR MOUNT

SCALE: NTS

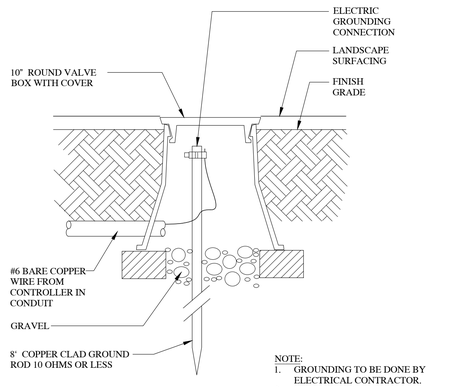

NOTE:
1. GROUNDING TO BE DONE BY ELECTRICAL CONTRACTOR.
2. SEE ELECTRICAL PLANS.

7 LIGHTNING GROUNDING ROD

SCALE: NTS

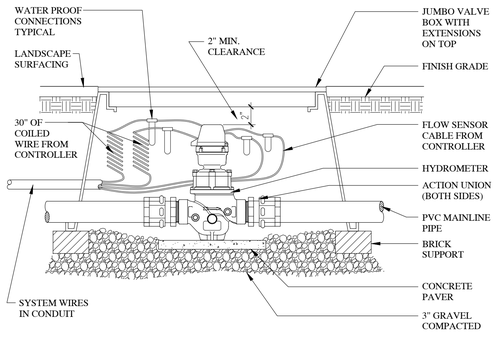

8 HYDROMETER

SCALE: NTS

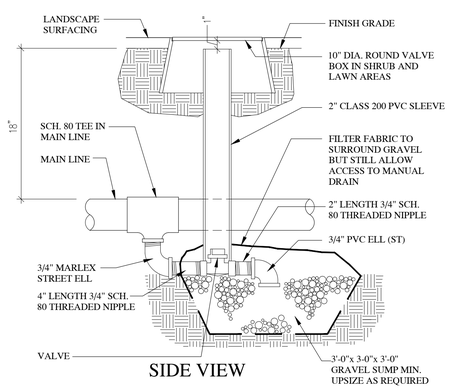

NOTE:
- DRAIN INTO CENTER OF GRAVEL SUMP
- USE AT EVERY LOW SPOT ON MAINLINE

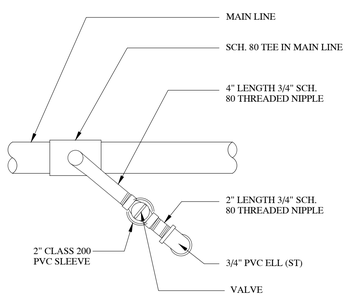

9 MAINLINE MANUAL DRAIN VALVE

SCALE: NTS

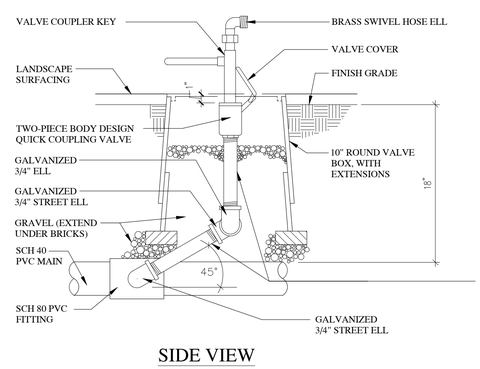

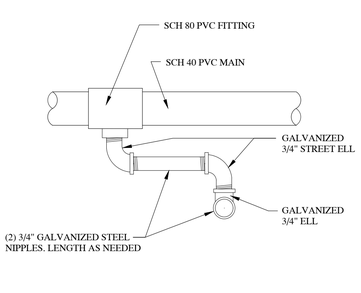

10 QUICK COUPLING VALVE

SCALE: NTS

bhd ARCHITECTS
www.bhdarchitects.com
Phone 801.571.0010
Fax 801.571.0303
Toll Free 888.571.0010
65 East Wadsworth Park Drive
Suite 205 Draper, Utah 84020

LICENSED LANDSCAPE ARCHITECT # 4884514 Cory B. Whiting 8-15-2024 STATE OF UTAH

THE CHURCH OF JESUS CHRIST OF LATTER-DAY SAINTS

Springwater 9
Vineyard UT Springwater Stake

Approx. 540 South Geneva Road
Vineyard, Utah 84059

BHD #: 2346
Date: 15 Aug 2024
County Parcel: 39:228:0001
Plan Series: G300-MH-11
Owner #: 502-2004

Drawing Issue and Revision Schedule

#	Date	Description
1	15 Aug 2024	Bid Documents

IRRIGATION DETAILS

LS401

In Site DESIGN GROUP
Landscape Architecture Land Planning
17 North 470 West American Fork, Utah 84003
801.756.5043 www.in-sitedesigngroup.com

Printed: 14 Aug 2024 5:27 P.M.

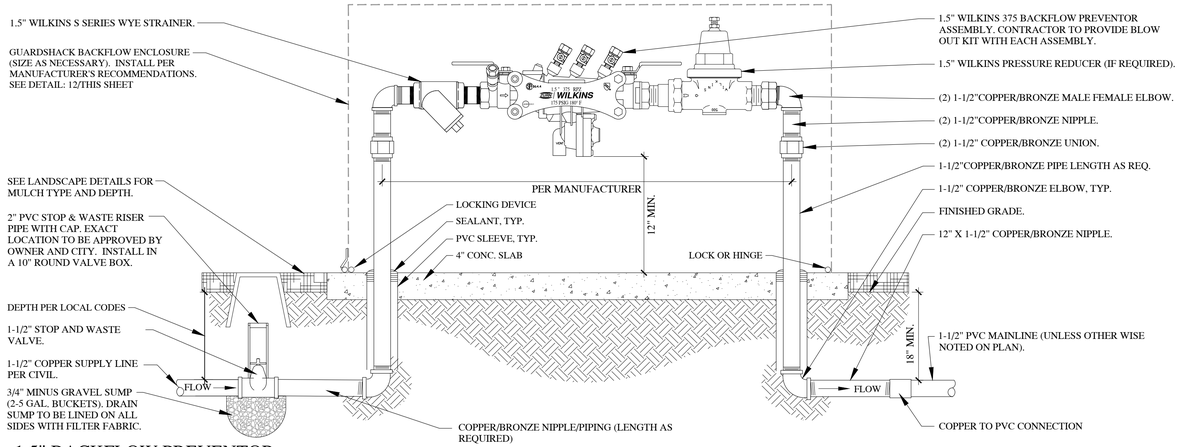

11 1.5" BACKFLOW PREVENTOR

SCALE: NTS

BACKFLOW PREVENTOR NOTES:

1. EQUIPMENT TO BE INSTALLED AT A MINIMUM OF 24" FROM ANY STRUCTURES OR HARDSCAPING.
2. WHEN UNIT IS NEXT TO STRUCTURE (i.e. WALL BUILDING, ETC.) MOUNT TEST COCKS ON SIDE AWAY FROM STRUCTURE.
3. PROVIDE OWNER WITH COMPLETE WRITTEN INSTRUCTIONS ON HOW TO DRAIN ENTIRE BACKFLOW UNIT TO PREVENT FREEZING. CONTRACTOR TO PROVIDE BLOW OUT KIT FROM MANUFACTURER.
4. CONTRACTOR SHALL PROVIDE ALL MATERIALS NECESSARY FOR PROPER RPZ INSTALLATION.
5. RPZ TO BE WINTERIZED AS NECESSARY TO PREVENT FREEZING. INSULATION IS REQUIRED TO PREVENT RPZ FROM FREEZING TEMPERATURES BEFORE SYSTEM IS BLOWN OUT FOR THE SEASON. CONTRACTOR SHALL INSTALL INSULATION BLANKET FOR RPZ.
6. WHERE CORROSION IS POSSIBLE, USE A DIELECTRIC UNION WHEREVER A COPPER-BASED METAL (COPPER, BRASS, BRONZE) IS JOINED TO AN IRON-BASED METAL (IRON, GALVANIZED STEEL, STAINLESS STEEL).
7. CONTRACTOR SHALL TEST WATER SUPPLY TO ENSURE THERE IS AT LEAST 90 PSI AND 23 GPM AVAILABLE AT THE POC PRIOR TO BEGINNING WORK ON THE SYSTEM.
8. PROVIDE DEDUCTIVE BID ALTERNATE TO REDUCE BACKFLOW, PRESSURE REDUCER AND Y STRAINER 1" VS. 1-1/2" WITH ASSOCIATED REDUCER FITTINGS.

NOTES:
1. VALVE BOX TO REST ON (4) CMU BLOCKS (ONE FOR EACH SIDE).
2. CLUSTERED VALVE BOXES MAY SHARE A CMU BLOCK.

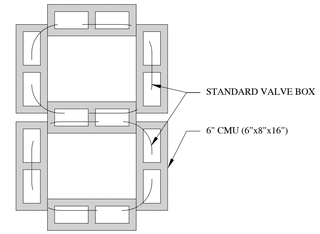

12 CMU PLACEMENT

SCALE: NTS

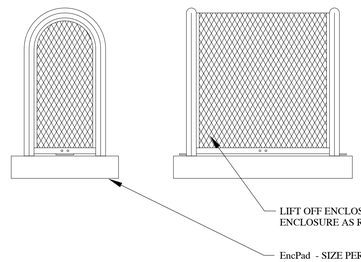

GUARDSHACK GENERAL SPECIFICATIONS

1. ALL PIPE SHALL BE 1 ¼" SCHEDULE 40 A.S.T.M. A-53 GRADE A- ELECTRIC WELD PIPE.
2. ANGLE IRON SHALL BE 1" X 1" X ⅛" STEEL.
3. EXPANDED METAL SHALL BE ½" SPACING X # 13 GA. FLATTENED DIAMOND PATTERN STEEL.
4. THERE SHALL BE NO EXPOSED ENDS OF EXPANDED METAL ON THE OUTSIDE OF THE ENCLOSURE.
5. WELDING SHALL BE A MINIMUM OF ¼" LONG WELDS ON 4" SPACING.
6. STANDARD MOUNTING BRACKETS SHALL BE WELDED ON EACH END OF LIFT OFF ENCLOSURES.
7. ONE BRACKET ON HINGED UNITS SHALL BE WELDED ON END OPPOSITE HINGES.
8. HARDWARE KITS PROVIDED FOR MOUNTING ENCLOSURES.
9. ALL HARDWARE SHALL BE SECURELY ATTACHED TO ENCLOSURES.
10. ALL ENCLOSURES SHALL WITHSTAND A MINIMUM OF 200 LBS. PER SQUARE FOOT WITHOUT ANY PERMANENT DEFLECTION OR DISTORTION.
11. 3/8" SPACING BETWEEN ANGLE IRON FRAMEWORK OF ENCLOSURE AND SLAB TO PREVENT RUSTING. ONLY PIPE ENDS TO TOUCH SLAB.

POWDER COATED UNITS

PRE-POWDERCOAT TREATMENT PROCESS
CLEAN GUARDSHACK UNIT WITH A S-44 ALKALINE CLEANER, OVERFLOW RINSE, APPLY AN AC-8115 IRON PHOSPHATE TREATMENT, OVERFLOW RINSE AND FINISH WITH A #198 SEALER RINSE TO PREVENT RUSTING AND IMPROVE ADHESION.

POWDER COAT TREATMENT PROCESS
UNITS SHALL BE PREHEATED AND COATED BY ELECTROSTATIC APPLICATION OF 2.0 TO 3.5 MIL THICKNESS ON ALL SURFACES. POWDER SHALL BE RAL 1019 WOODLANDS TAN OR TCI 8810-6058 FOREST GREEN OR APPROVED EQUAL IMPACT RESISTANCE FINISH 160 INCH POUNDS DIRECT 160 INCH POUNDS REVERSE, PER ASTM D-2794 SPECS. GLOSS FINISH >85, PER ASTM D-523. ADHESION TO BE RATED EXCELLENT WHEN TESTED TO ASTM D-3359 STANDARDS.

NOTE:
1. ENCLOSURE IS AVAILABLE THROUGH:
   BPDI-GUARDSHACK ENCLOSURES
   3831 E. GROVE STREET
   PHOENIX, ARIZONA 85040
   (602) 426-1002
2. CONTRACTOR TO PROVIDE A LOCK TO OWNER UPON INSTALLATION.
3. REFERENCE RPZ DETAIL FOR BACKFLOW INSTALLATION.
4. UPSIZE ENCLOSURE IF NECESSARY.
5. OWNER TO DETERMINE POWDER COAT COLOR PRIOR TO ORDERING UNIT.

13 STANDARD GUARD SHACK ENCLOSURE

SCALE: NTS

NOTES:
1. LIMIT 1 VALVE PER BOX.
2. 10" MIN. LATERAL LINE DEPTH AT VALVE BOX, 12" MIN. LATERAL LINE DEPTH EVERYWHERE ELSE.
3. PROVIDE MIN. 2" CLEARANCE BETWEEN WIRE AND CMU BLOCK.

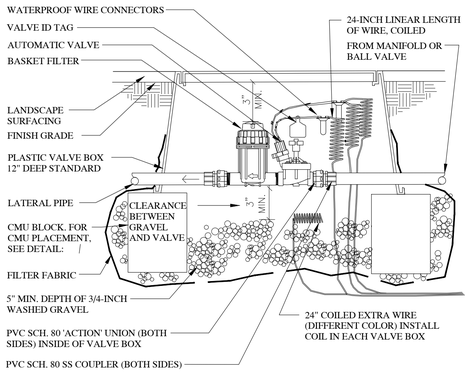

14 DRIP VALVE SECTION - CONVENTIONAL WIRE

SCALE: NTS

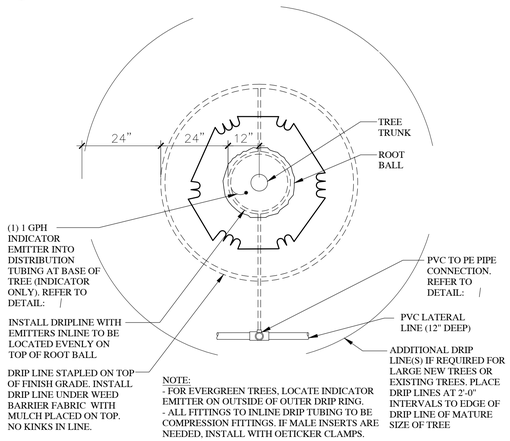

NOTE:
- FOR EVERGREEN TREES, LOCATE INDICATOR EMITTER ON OUTSIDE OF OUTER DRIP RING.
- ALL FITTINGS TO INLINE DRIP TUBING TO BE COMPRESSION FITTINGS. IF MALE INSERTS ARE NEEDED, INSTALL WITH OETICKER CLAMPS.

15 TREE DRIP - PLAN VIEW (PLANTER AREAS)

SCALE: NTS

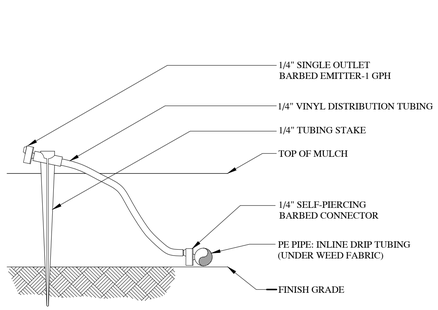

NOTE:
1. CONNECT EMITTER DIRECTLY INTO IN-LINE DRIP TUBING.
2. THIS IS AN INDICATOR ONLY EMITTER TO BE USED AT EACH TREE RING AND AREA WHERE IN-LINE TUBING IS INSTALLED.
3. 1/4" TUBING LENGTH: MINIMUM 14", MAXIMUM 24".
4. REFER TO DETAIL 15 ON THIS SHEET.

16 INDICATOR EMITTER

SCALE: NTS

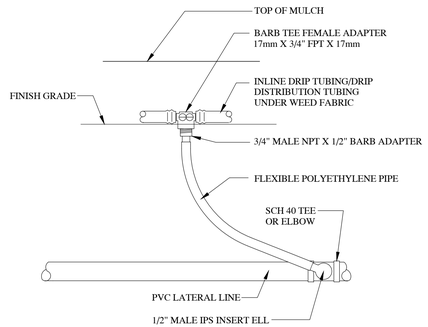

NOTES:
1. USE AT TREE RINGS ONLY.
2. LIMIT 1 VALVE PER BOX.
3. 10" MIN. LATERAL LINE DEPTH AT VALVE BOX, 12" MIN. LATERAL LINE DEPTH EVERYWHERE ELSE.
4. PROVIDE MIN. 2" CLEARANCE BETWEEN CONDUIT AND CMU BLOCK.

17 PVC TO BE PIPE CONNECTION

SCALE: NTS

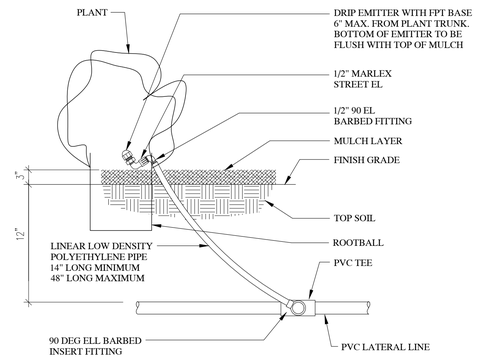

NOTE: LOCATE EMITTER ON BLDG OR FENCE SIDE OF PLANT.

18 DRIP EMITTER INSTALLATION

SCALE: NTS

bhd ARCHITECTS
www.bhdarchitects.com
Phone 801.571.0010
Fax 801.571.0303
Toll Free 888.571.0010
65 East Wadsworth Park Drive
Suite 205 Draper, Utah 84020

LICENSED LANDSCAPE ARCHITECT # 4884514 Cory B. Whiting 8-15-2024 STATE OF UTAH

THE CHURCH OF JESUS CHRIST OF LATTER-DAY SAINTS

Springwater 9
Vineyard UT Springwater Stake
Approx. 540 South Geneva Road
Vineyard, Utah 84059

BHD #: 2346
Date: 15 Aug 2024
County Parcel: 39:228:0001
Plan Series: G300-MH-11
Owner #: 502-2004

Drawing Issue and Revision Schedule

#	Date	Description
1	15 Aug 2024	Bid Documents

IRRIGATION DETAILS

LS402

In Site DESIGN GROUP
Landscape Architecture Land Planning
17 North 470 West American Fork, Utah 84003
801.756.5043 www.in-sitedesigngroup.com

Printed: 14 Aug 2024 5:27 PM

NOTES:
1. LIMIT 1 VALVE PER BOX.
2. 10" MIN. LATERAL LINE DEPTH AT VALVE BOX, 12" MIN. LATERAL LINE DEPTH EVERYWHERE ELSE.
3. PROVIDE MIN. 2" CLEARANCE BETWEEN WIRE AND CMU BLOCK.
4. FOR MANIFOLD AND VALVE ASSEMBLY, SEE DETAIL:

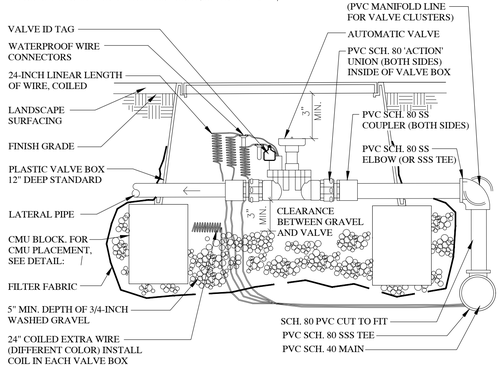

19 AUTOMATIC VALVE - CONVENTIONAL WIRE
SCALE: NTS

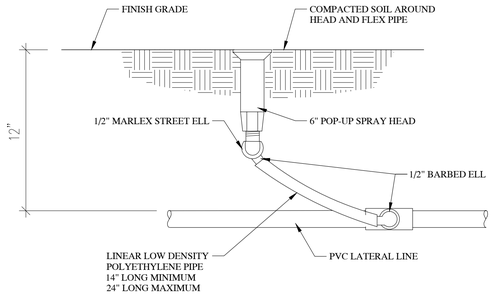

20 SPRAY AND ROTARY HEAD ASSEMBLY
SCALE: NTS

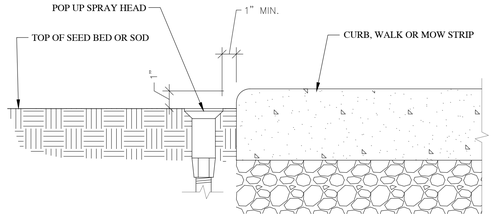

21 SPRAY HEAD OR ROTOR NEXT TO CURB / WALK
SCALE: NTS

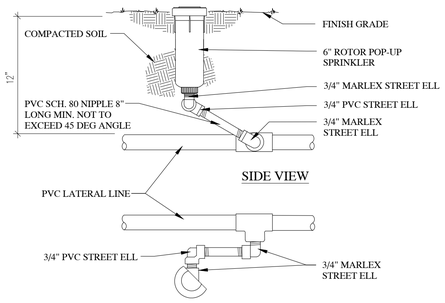

22 ROTOR POP-UP HEAD
SCALE: NTS

In Site DESIGN GROUP
Landscape Architecture Land Planning
17 North 470 West American Fork, Utah 84003
801.756.5043 www.in-sitedesigngroup.com

bhd ARCHITECTS
www.bhdarchitects.com
Phone 801.571.0010
Fax 801.571.0303
Toll Free 888.571.0010
65 East Wadsworth Park Drive
Suite 205 Draper, Utah 84020

LICENSED LANDSCAPE ARCHITECT
4884514
Cory B. Whiting
8-15-2024
STATE OF UTAH

THE CHURCH OF JESUS CHRIST OF LATTER-DAY SAINTS

Springwater 9
Vineyard UT Springwater Stake

Approx. 542 South Geneva Road
Vineyard, Utah 84059

Date: 15 Aug 2024
BHD #: 2346
County Parcel: 39:228:0001
Plan Series: G300-MH-11
Owner #: 502-2004

Drawing Issue and Revision Schedule

#	Date	Description
1	15 Aug 2024	Bid Documents

IRRIGATION DETAILS

LS403

Printed: 14 Aug 2024 5:27 PM

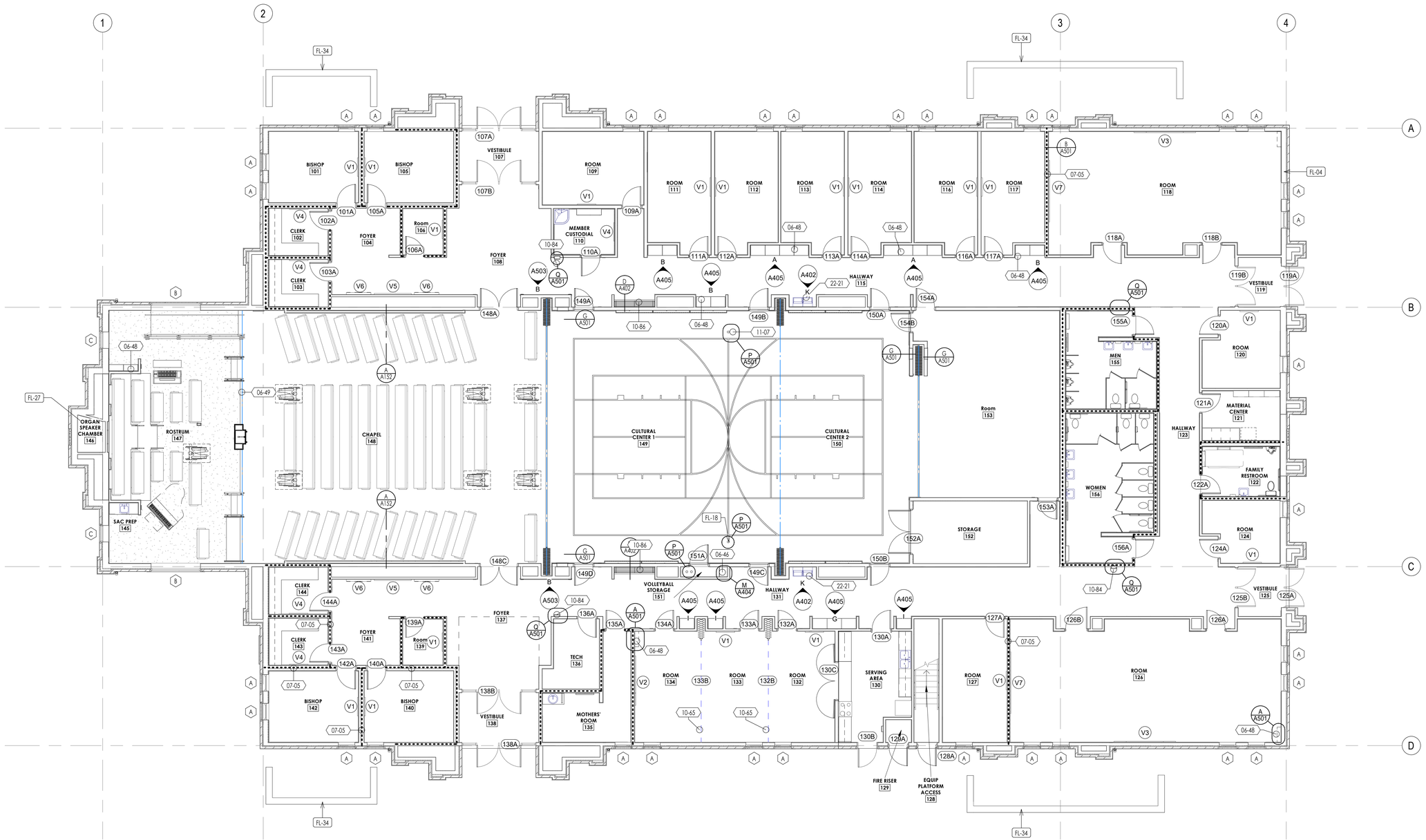

MAIN FLOOR PLAN

1/8" = 1'-0"

A101

KEYNOTES

XX-XX — KEYNOTE MATERIAL

MATERIAL / SPECIFICATION KEYNOTES

06-46	SHELVING, SEE DETAILS
06-48	WOOD VENEER FACED ARCHITECTURAL CABINETS, SEE DETAILS & SPECIFICATION
06-49	ROSTRUM CASEWORK, SEE DETAILS & SPECIFICATION
07-05	BLANKET SOUND INSULATION
10-65	FOLDING ACCORDION DOOR, SEE DETAILS & SPECIFICATION
10-84	FIRE PROTECTION CABINET, SEE SPECIFICATION
10-86	HAT & COAT RACK, SEE SPECIFICATION
11-07	VOLLEYBALL POST HOLE, SEE DETAILS & SPECIFICATIONS
22-21	ELECTRICAL WATER COOLER, SEE PLUMBING DRAWINGS & SPECIFICATION

FP-XX — KEYNOTE INSTRUCTION

INSTRUCTIONAL KEYNOTES

FL-04	SEE ARCHITECTURAL WALL TYPES PLAN FOR ALL WALL TYPES
FL-18	VOLLEYBALL POST SLEEVE, SEE DETAILS
FL-27	ORGAN LOFT SPEAKER, SEE A/V DRAWINGS
FL-34	MECHANICAL ENCLOSURE WALL, SEE CIVIL & MECHANICAL DRAWINGS

FLOOR PLAN GENERAL NOTES

1. SEE SHEET A103 FOR DIMENSIONS.
2. SEE SHEET A111, A112 & A113 FOR WALL TYPES
3. INSULATE ATTIC SPACE ABOVE AND INTERIOR WALLS AROUND ENTRY 107, 119, 125 AND 138.
4. PROVIDE SOLID BLOCKING IN THE WALLS AT ALL DOOR STOPS, VISUAL DISPLAY BOARDS, TOILET COMPARTMENTS, LAVATORY SUPPORTS, WALL HUNG CABINETS, AND AT ALL OTHER EQUIPMENT AND ACCESSORY LOCATIONS.
5. FOR ELEVATIONS OF VISUAL DISPLAY BOARDS, SEE SHEET F103.
6. VAPOR RETARDER UNDER CONCRETE SLAB - SEE STRUCTURAL.
7. FOR LOCATION OF RETURN AIR DUCT IN STUD WALLS, SEE MECHANICAL DRAWINGS.
8. PROVIDE A 2x FIRE BLOCKING IN ALL WALLS AT CEILING AND FLOOR LEVELS.
9. ALL WALLS EXCEEDING 10 FEET IN HEIGHT, PROVIDE 2x FIRE BLOCKING NOT TO EXCEED 10'-0" O.C. VERTICALLY.
10. FOR DOOR SCHEDULES, SEE SHEET A601.
11. SEE CIVIL SHEETS FOR CONTINUATION OF CONCRETE SIDEWALK AT ENTRIES AND ALL OTHER SITE CONCRETE.
12. GRID LIINES ARE TO BE TO FACE OF STUD UNLESS NOTED OTHERWISE.
13. IF AHJ REQUIRES A "KNOX BOX, ARCHITECT WILL INDICATE THE LOCATION PER THE AHJ'S REQUIREMENT. IF NOT REQUIRED, REMOVE REFERENCES TO A "KNOX" BOX AND DO NOT PROVIDE ONE.
14. LIGHT COVE AND SLOPED WALL, SEE A/A152.

bhd ARCHITECTS
www.bhdarchitects.com
Phone 801.571.0010
Fax 801.571.0303
Toll Free 888.571.0010
65 East Wadsworth Park Drive
Suite 205 Draper, Utah 84020

LICENSED ARCHITECT
Lafe Theadore Harris
15 Aug 2024
#332878-0301
STATE OF UTAH

THE CHURCH OF JESUS CHRIST OF LATTER-DAY SAINTS

Springwater 9
Vineyard UT Springwater Stake

Approx. 542 South Geneva Road
Vineyard, Utah 84059

BHD #: 2346
County Parcel: 39-228-0001
Plan Series: G300-MH-11
Owner #: 502-2004
Date: 15 Aug 2024

Drawing Issue and Revision Schedule

#	Date	Description

MAIN FLOOR PLAN

A101

8/15/2024 1:05:41 PM

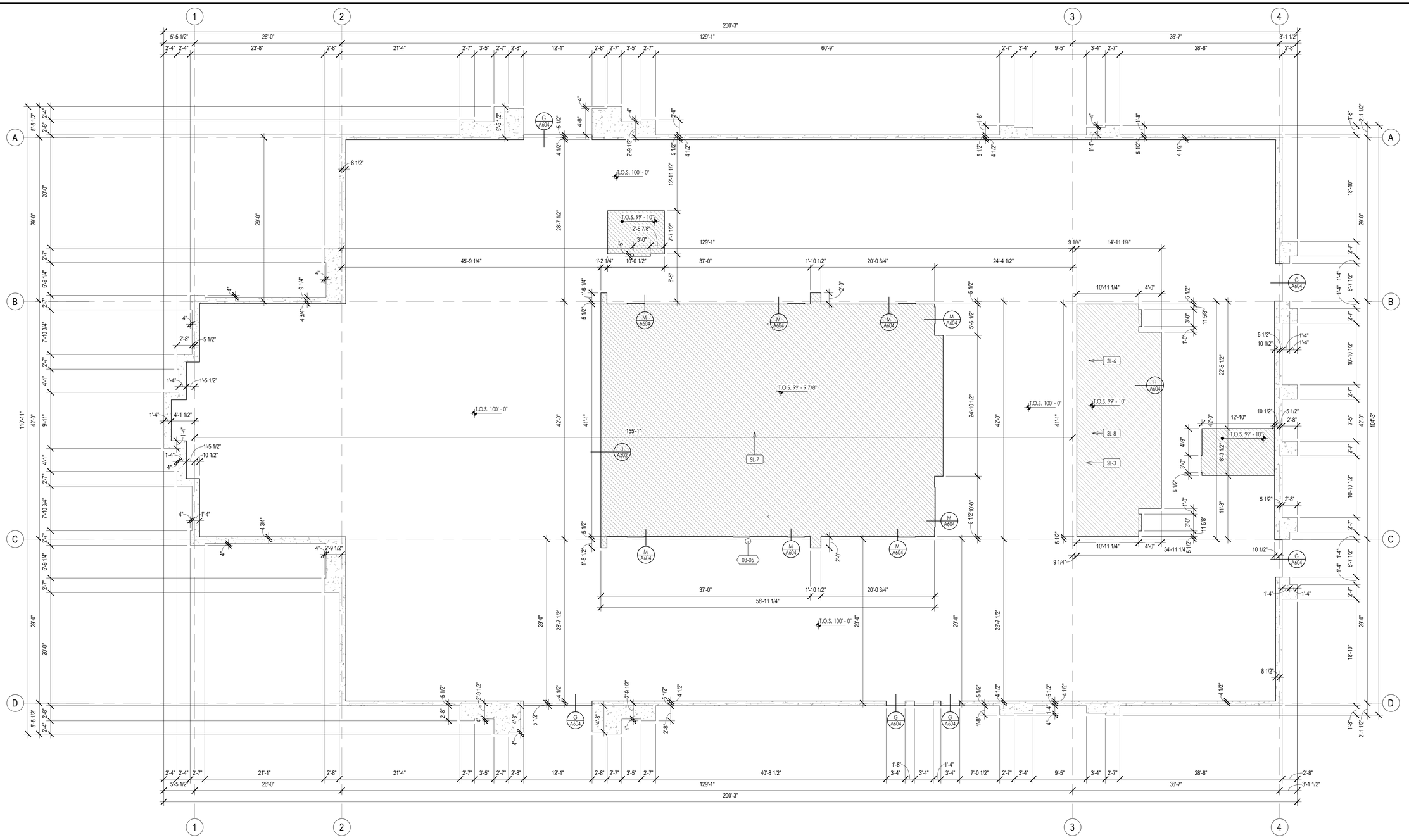

MAIN FLOOR SLAB PLAN

1/8" = 1'-0"

1 / A102

KEYNOTES

XX-XX — KEYNOTE MATERIAL

MATERIAL / SPECIFICATION KEYNOTES

03-05	CAST IN PLACE FOOTINGS, SEE STRUCTURAL DRAWINGS & SPECIFICATIONS

FP-XX — KEYNOTE INSTRUCTION

INSTRUCTIONAL KEYNOTES

SL-3	CONTRACTOR TO COORDINATE LOCATION OF DRAINS IN RESTROOMS, SETTING BED TO PROVIDE SLOPE AT DRAINS
SL-6	PROVIDE BLOCKOUT IN STRUCTURAL SLAB FOR PLUMBING, COORDINATE WITH PLUMBING DRAWINGS
SL-7	RECESS SLAB AS SHOWN FOR ATHLETIC FLOOR, SEE DETAILS
SL-8	RECESS SLAB AS SHOWN FOR TILE FLOOR, SEE DETAILS

SLAB PLAN GENERAL NOTES

RECESSED SLAB

bhd ARCHITECTS
www.bhdarchitects.com
Phone 801.571.0010
Fax 801.571.0303
Toll Free 888.571.0010
65 East Wadsworth Park Drive
Suite 205 Draper, Utah 84020

LICENSED ARCHITECT
Lafe Theadore Harris
15 Aug 2024
(5526878-0301)
STATE OF UTAH

THE CHURCH OF JESUS CHRIST OF LATTER-DAY SAINTS

Springwater 9
Vineyard UT Springwater Stake

Approx. 542 South Geneva Road
Vineyard, Utah 84059

Owner #: 502-2004
Plan Series: G300-MH-11
County Parcel: 39-228-0001
BHD #: 2346
Date: 15 Aug 2024

Drawing Issue and Revision Schedule

#	Date	Description

ARCHITECTURAL SLAB PLAN

A102

8/15/2024 1:05:42 PM

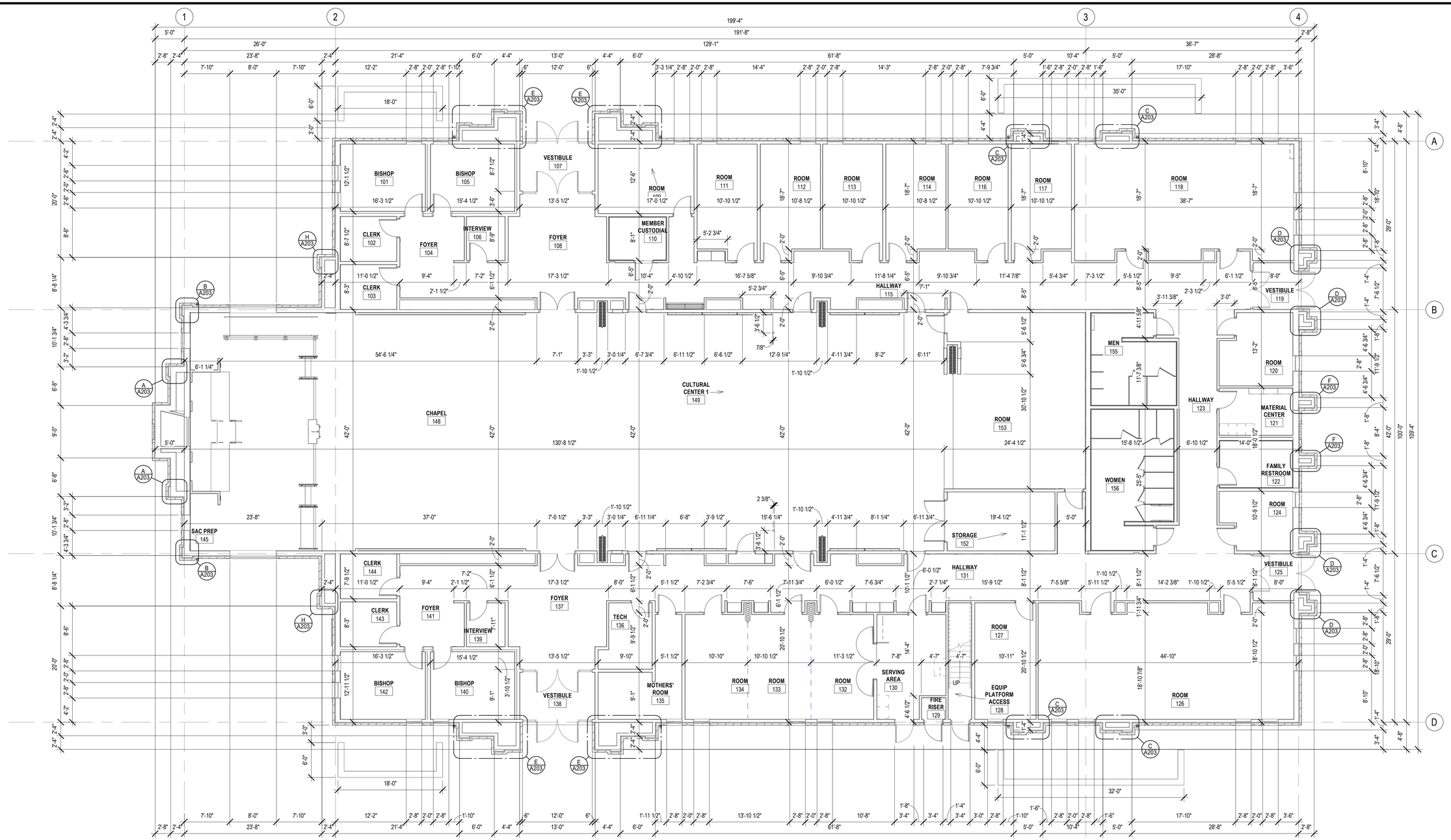

MAIN FLOOR DIMENSION PLAN

1/8" = 1'-0"

1 / A103

DIMENSION PLAN GENERAL NOTES

1. DIMENSIONS ARE FROM FACE OF STUD UNLESS NOTED OTHERWISE.
2. SEE SHEETS A111 & A112 FOR WALL TYPES.
3. FOR LOCATION OF RETURN AIR DUCTS IN STUD WALLS SEE MECHANICAL DRAWINGS.

bhd ARCHITECTS
www.bhdarchitects.com
Phone 801.571.0010
Fax 801.571.0303
Toll Free 888.571.0010
65 East Wadsworth Park Drive
Suite 205 Draper, Utah 84020

LICENSED ARCHITECT
Lafe Theadore Harris
15 Aug 2024
(5278878-0301)
STATE OF UTAH

THE CHURCH OF JESUS CHRIST OF LATTER-DAY SAINTS

Springwater 9
Vineyard UT Springwater Stake

Approx. 540 South Geneva Road
Vineyard, Utah 84059

Owner #: 502-2004
Plan Series: G300-MH-11
County Parcel: 39-228:0001
BHD #: 2346
Date: 15 Aug 2024

Drawing Issue and Revision Schedule

#	Date	Description

MAIN FLOOR DIMENSION PLAN

A103

8/15/2024 1:05:45 PM

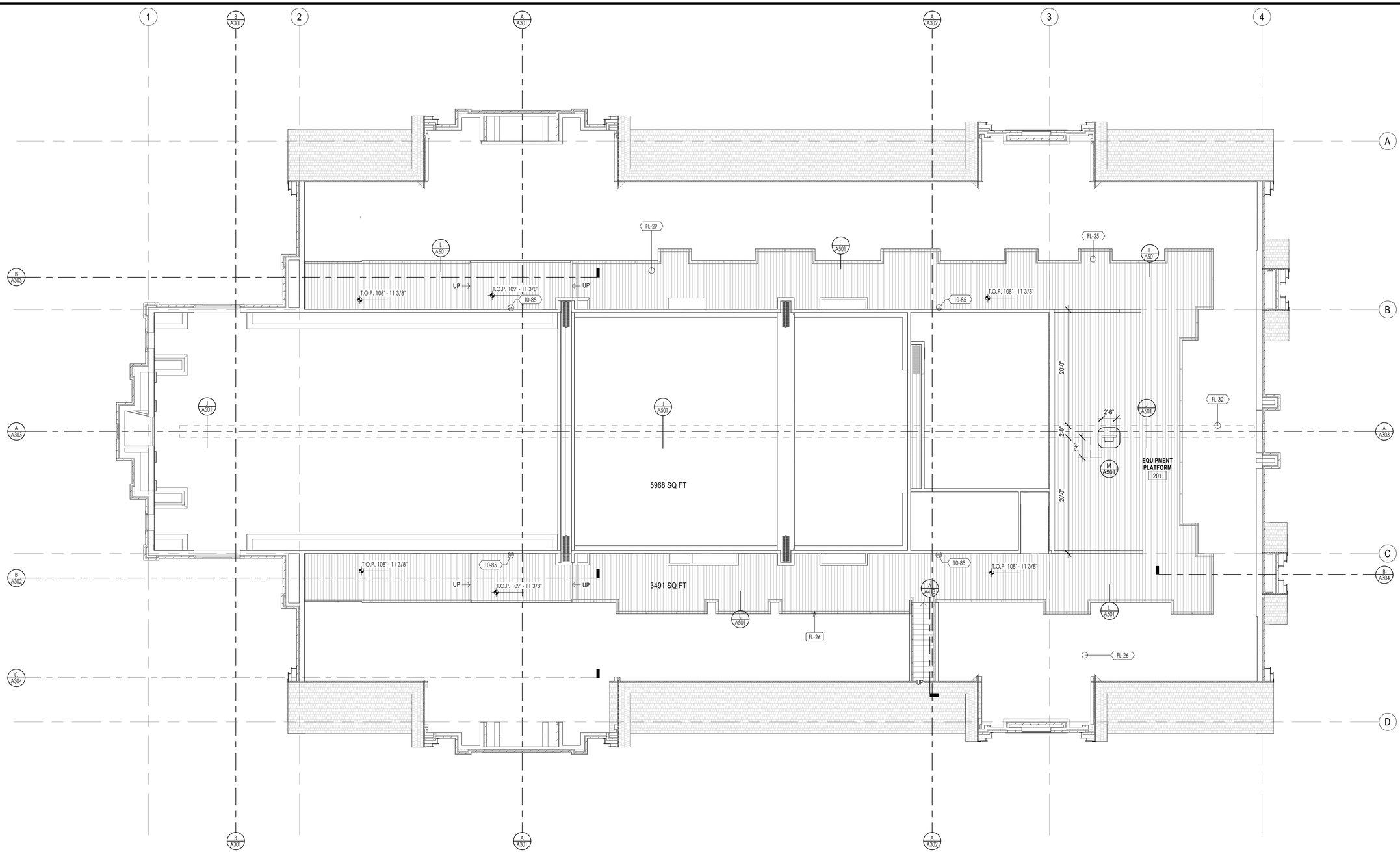

EQUIPMENT PLATFORM
1/8" = 1'-0"
1 / A104

KEYNOTES

XX-XX — KEYNOTE MATERIAL

MATERIAL / SPECIFICATION KEYNOTES

10-85	FIRE EXTINGUISHER, SEE SPECIFICATION

FP-XX — KEYNOTE INSTRUCTION

INSTRUCTIONAL KEYNOTES

FL-25	3/4" PLYWOOD SHEATHING AT EQUIPMENT PLATFORM FLOOR, TYPICAL
FL-26	INSTALL SAFETY GUARDRAIL & HANDRAIL IN LOFT EXCEPT WHERE PROTECTED BY MECH. DUCTWORK. SEE DETAILS
FL-29	SEE MECHANICAL DRAWINGS FOR MECHANICAL EQUIPMENT LAYOUT
FL-32	CATWALK FOR ATTIC ACCESS, SEE DETAILS

EQUIPMENT PLAN GENERAL NOTES

1. SEE SHEET A105 FOR MAIN FLOOR PLAN WALL TYPES.
2. SEE SHEETS A111 & A112 FOR WALL DESCRIPTIONS.
3. INSTALL ATTIC GUARDRAIL AS NEEDED EXCEPT WHERE DUCT WORK OCCURS.
4. PLATFORM AREA CALCULATION: 5968 SQ FT *2/3 = 3979 SQ FT
   PLATFORM AREA = 3491SQ FT 3491 SQ FT < 3979 SQ FT

bhd ARCHITECTS
www.bhdarchitects.com
Phone 801.571.0010
Fax 801.571.0303
Toll Free 888.571.0010
65 East Wadsworth Park Drive
Suite 205 Draper, Utah 84020

LICENSED ARCHITECT
Lafe Theadore Harris
15 Aug 2024
#7878-0301
STATE OF UTAH

THE CHURCH OF JESUS CHRIST OF LATTER-DAY SAINTS

Springwater 9
Vineyard UT Springwater Stake
Approx. 542 South Geneva Road
Vineyard, Utah 84059

BHD #: 2346
County Parcel: 39:228:0001
Plan Series: G300-MH-11
Owner #: 502-2004
Date: 15 Aug 2024

Drawing Issue and Revision Schedule

#	Date	Description

EQUIPMENT PLATFORM PLAN

A104

8/15/2024 1:05:47 PM

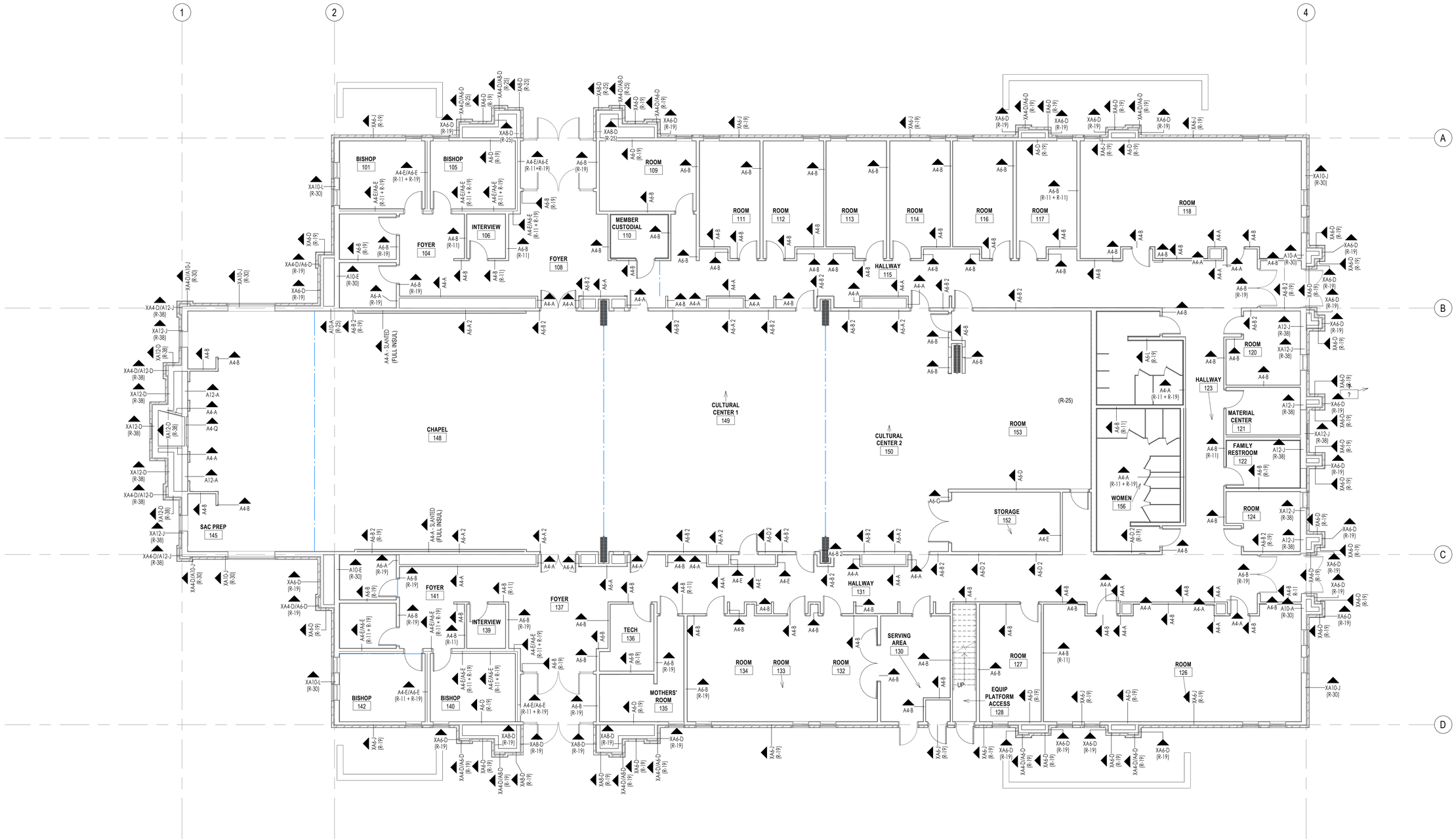

MAIN FLOOR WALL TYPES

1/8" = 1'-0"

1 / A105

WALL TYPES FLOOR PLAN GENERAL NOTES

1. SEE SHEETS A111, A112 & A113 FOR WALL DESCRIPTIONS.

bhd ARCHITECTS
www.bhdarchitects.com
Phone 801.571.0010
Fax 801.571.0303
Toll Free 888.571.0010
65 East Wadsworth Park Drive
Suite 205 Draper, Utah 84020

LICENSED ARCHITECT
Lafe Theadore Harris
15 Aug 2024
No. 8878-0301
STATE OF UTAH

THE CHURCH OF JESUS CHRIST OF LATTER-DAY SAINTS

Springwater 9
Vineyard UT Springwater Stake

Approx. 542 South Geneva Road
Vineyard, Utah 84059

BHD #: 2346
County Parcel: 39:228:0001
Plan Series: G300-MH-11
Owner #: 502-2004
Date: 15 Aug 2024

Drawing Issue and Revision Schedule

#	Date	Description

MAIN FLOOR WALL TYPES PLAN

A105

8/15/2024 1:05:52 PM

WALL TYPE: XA12-D

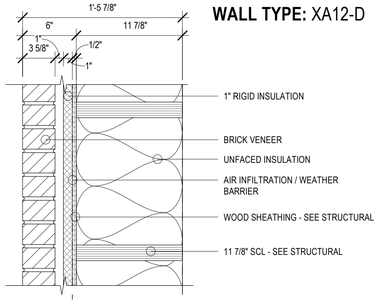

XA12-D WALL TYPE — A111
1 1/2" = 1'-0"

WALL TYPE: XA12-J

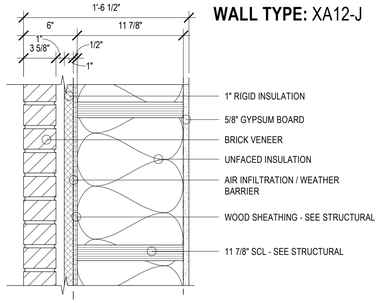

XA12-J WALL TYPE — B A111
1 1/2" = 1'-0"

WALL TYPE: XA12-P

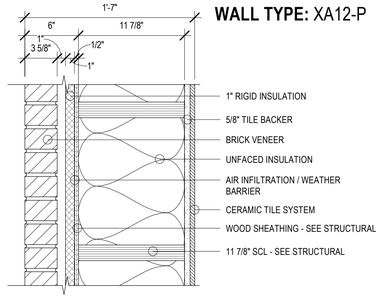

XA12-P WALL TYPE — C A111
1 1/2" = 1'-0"

WALL TYPE: XA10-D

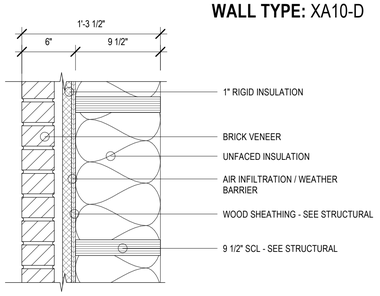

XA10-D WALL TYPE — D A111
1 1/2" = 1'-0"

WALL TYPE: XA10-J

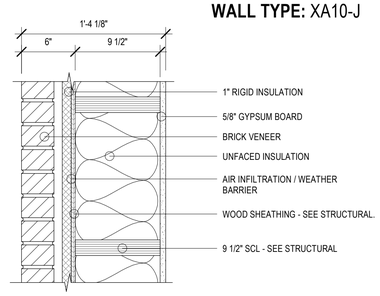

XA10-J WALL TYPE — E A111
1 1/2" = 1'-0"

WALL TYPE: XA10-L

XA10-L WALL TYPE — F A111
1 1/2" = 1'-0"

WALL TYPE: XA8-D

XA8-D WALL TYPE — G A111
1 1/2" = 1'-0"

WALL TYPE: XA6-D

XA6-D WALL TYPE — H A111
1 1/2" = 1'-0"

WALL TYPE: XA6-J

XA6-J WALL TYPE — J A111
1 1/2" = 1'-0"

WALL TYPE: XA4-D/A12-J

XA4-D/A12-J WALL TYPE — K A111
1 1/2" = 1'-0"

WALL TYPE: XA4-D/A12-D

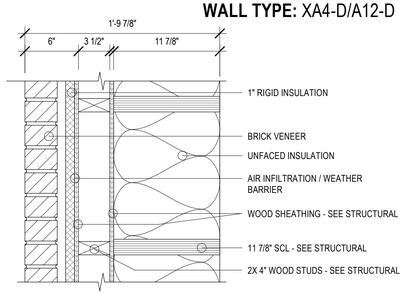

XA4-D/A12-D WALL TYPE — L A111
1 1/2" = 1'-0"

WALL TYPE: XA4-D/A10-J

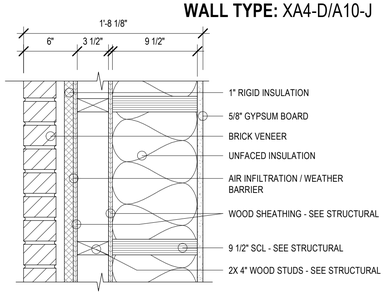

XA4-D/A10-J WALL TYPE — M A111
1 1/2" = 1'-0"

WALL TYPE: XA4-D/A8-D

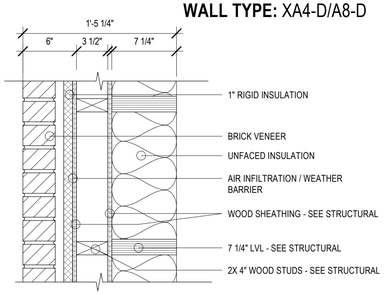

XA4-D/A8-D WALL TYPE — N A111
1 1/2" = 1'-0"

WALL TYPE: XA4-D/A6-D

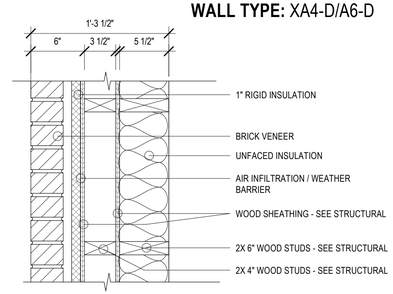

XA4-D/A6-D WALL TYPE — P A111
1 1/2" = 1'-0"

bhd ARCHITECTS
www.bhdarchitects.com
Phone 801.571.0010
Fax 801.571.0303
Toll Free 888.571.0010
65 East Wadsworth Park Drive
Suite 205 Draper, Utah 84020

LICENSED ARCHITECT
Lafe Theadore Harris
15 Aug 2024
(Sig.8878.0301)
STATE OF UTAH

THE CHURCH OF JESUS CHRIST OF LATTER-DAY SAINTS

Springwater 9
Vineyard UT Springwater Stake

Approx. 542 South Geneva Road
Vineyard, Utah 84059

Owner #: 502.2004
Plan Series: G300-MH-11
County Parcel: 39:228:0001
BHD #: 2346
Date: 15 Aug 2024

Drawing Issue and Revision Schedule

#	Date	Description

WALL TYPES

A111

8/15/2024 1:05:53 PM

WALL TYPE: A12-A

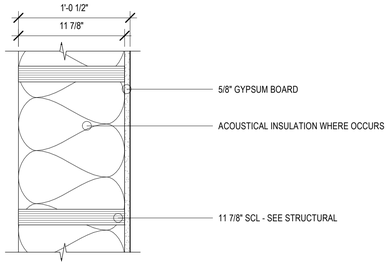

A12-A WALL TYPE — A112
1 1/2" = 1'-0"

WALL TYPE: A12-J

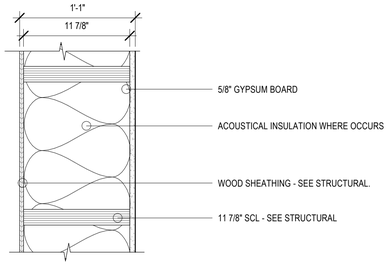

A12-J WALL TYPE — B — A112
1 1/2" = 1'-0"

WALL TYPE: A12-P

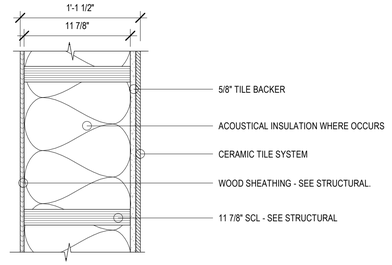

A12-P WALL TYPE — C — A112
1 1/2" = 1'-0"

WALL TYPE: A10-A

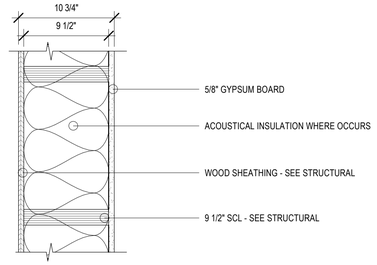

A10-A WALL TYPE — D — A112
1 1/2" = 1'-0"

WALL TYPE: A10-E

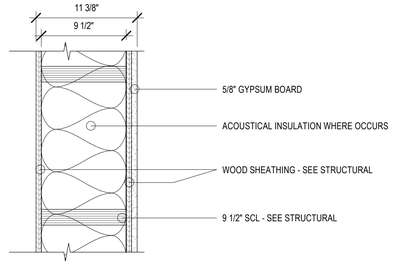

A10-E WALL TYPE — E — A112
1 1/2" = 1'-0"

WALL TYPE: A10-M

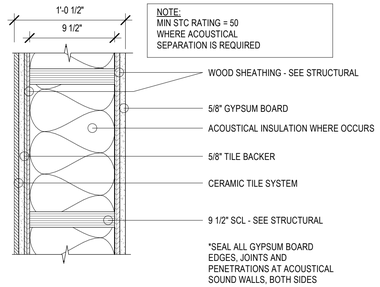

A10-M WALL TYPE — F — A112
1 1/2" = 1'-0"

WALL TYPE: A10-M2

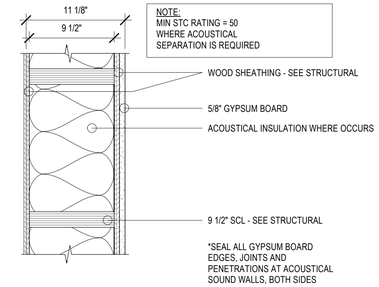

A10-M2 WALL TYPE — G — A112
1 1/2" = 1'-0"

WALL TYPE: A6-A

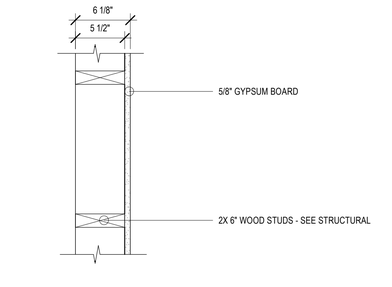

A6-A WALL TYPE — H — A112
1 1/2" = 1'-0"

WALL TYPE: A6-A 2

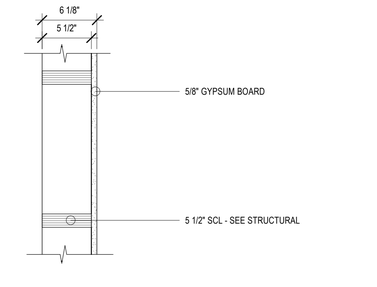

A6-A 2 WALL TYPE — J — A112
1 1/2" = 1'-0"

WALL TYPE: A6-B

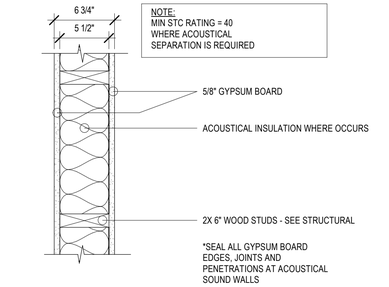

A6-B WALL TYPE — K — A112
1 1/2" = 1'-0"

WALL TYPE: A6-B 2

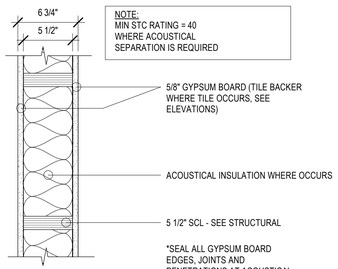

A6-B 2 WALL TYPE — L — A112
1 1/2" = 1'-0"

WALL TYPE: A6-C

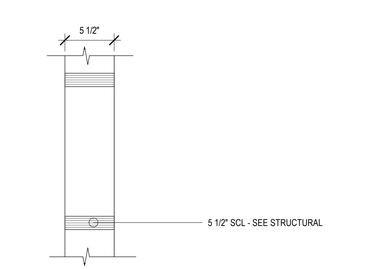

A6-C WALL TYPE — M — A112
1 1/2" = 1'-0"

WALL TYPE: A6-D

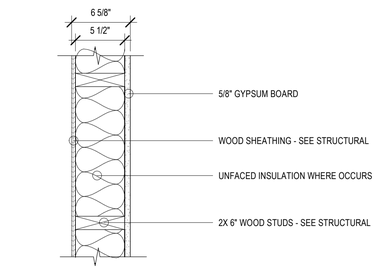

A6-D WALL TYPE — N — A112
1 1/2" = 1'-0"

WALL TYPE: A6-D 2

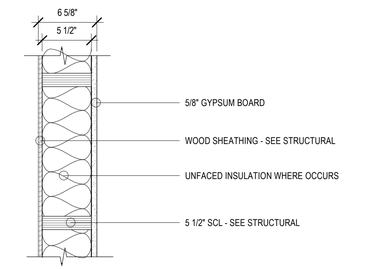

A6-D 2 WALL TYPE — P — A112
1 1/2" = 1'-0"

WALL TYPE: A6-G

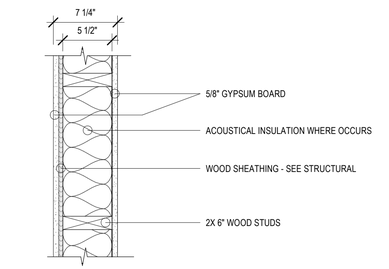

A6-G WALL TYPE — Q — A112
1 1/2" = 1'-0"

WALL TYPE: A6-H

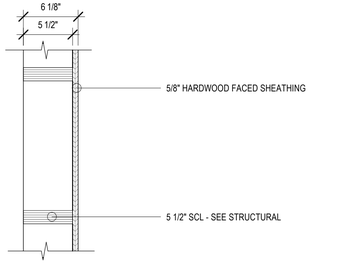

A6-H WALL TYPE — R — A112
1 1/2" = 1'-0"

WALL TYPE: A6-K

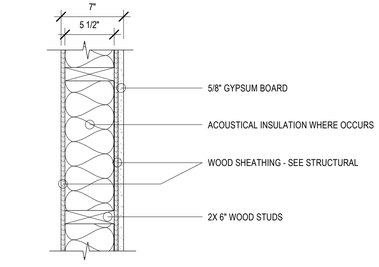

A6-K WALL TYPE — S — A112
1 1/2" = 1'-0"

WALL TYPE: A6-L

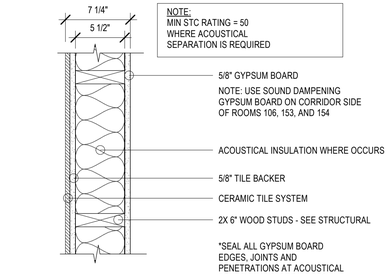

A6-L WALL TYPE — T — A112
1 1/2" = 1'-0"

WALL TYPE: A6-L 2

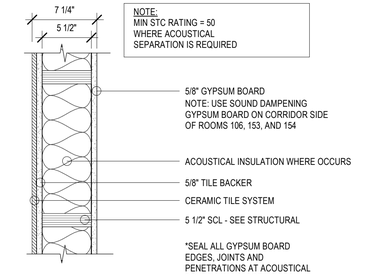

A6-L 2 WALL TYPE — U — A112
1 1/2" = 1'-0"

WALL TYPE: A6-P

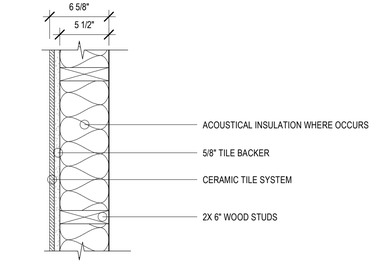

A6-P WALL TYPE — V — A112
1 1/2" = 1'-0"

bhd ARCHITECTS
www.bhdarchitects.com
Phone 801.571.0010
Fax 801.571.0303
Toll Free 888.571.0010
65 East Wadsworth Park Drive
Suite 205 Draper, Utah 84020

LICENSED ARCHITECT
Lafe Theadore Harris
15 Aug 2024
(6278-0301)
STATE OF UTAH

THE CHURCH OF JESUS CHRIST OF LATTER-DAY SAINTS

Springwater 9
Vineyard UT Springwater Stake

Approx. 542 South Geneva Road
Vineyard, Utah 84059

Owner #: 502-2004
Plan Series: G300-MH-11
County Parcel: 39-228-0001
BHD #: 2346
Date: 15 Aug 2024

Drawing Issue and Revision Schedule

#	Date	Description

WALL TYPES

A112

8/15/2024 1:05:55 PM

WALL TYPE: A4-A

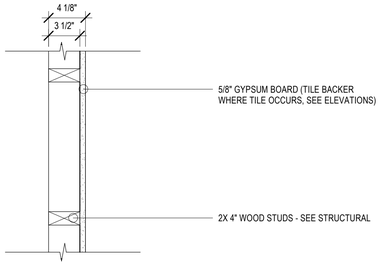

A4-A WALL TYPE — A / A113
1 1/2" = 1'-0"

WALL TYPE: A4-A - SLANTED

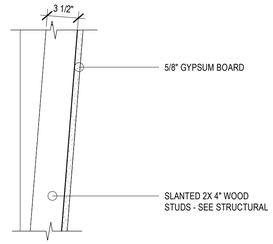

A4-A - SLANTED WALL TYPE — B / A113
1 1/2" = 1'-0"

WALL TYPE: A4-B

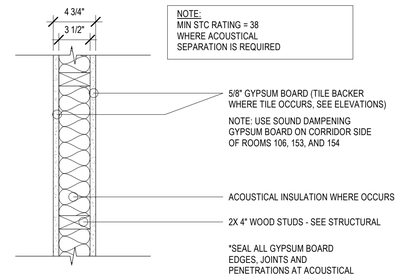

A4-B WALL TYPE — C / A113
1 1/2" = 1'-0"

WALL TYPE: A4-D

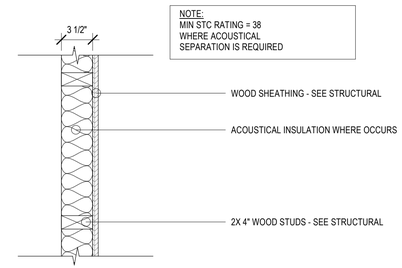

A4-D WALL TYPE — D / A113
1 1/2" = 1'-0"

WALL TYPE: A4-E

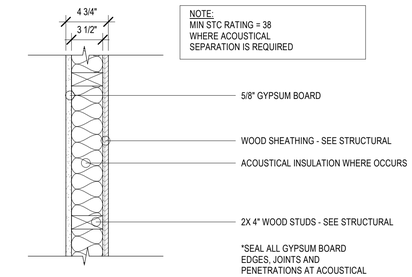

A4-E WALL TYPE — E / A113
1 1/2" = 1'-0"

WALL TYPE: A4-E/A6-E

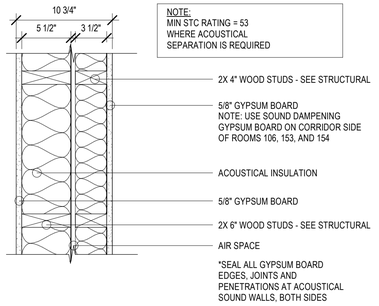

A4-E/A6-E WALL TYPE — F / A113
1 1/2" = 1'-0"

WALL TYPE: A4-E/A6-E 2

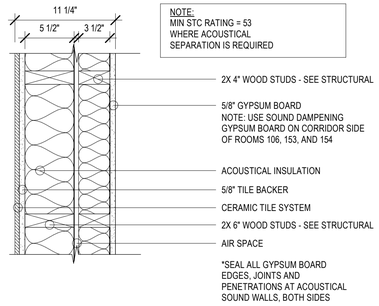

A4-E/A6-E 2 WALL TYPE — G / A113
1 1/2" = 1'-0"

WALL TYPE: A4-L

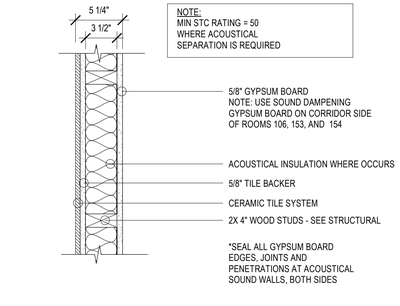

A4-L WALL TYPE — H / A113
1 1/2" = 1'-0"

WALL TYPE: A4-Q

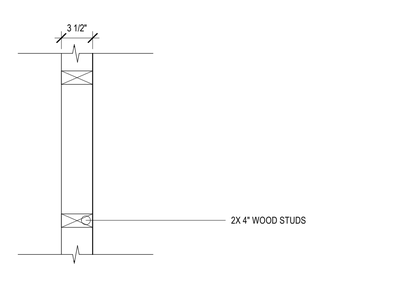

A4-Q WALL TYPE — J / A113
1 1/2" = 1'-0"

bhd ARCHITECTS
www.bhdarchitects.com
Phone 801.571.0010
Fax 801.571.0303
Toll Free 888.571.0010
65 East Wadsworth Park Drive
Suite 205 Draper, Utah 84020

LICENSED ARCHITECT
Lafe Theadore Harris
15 Aug 2024
No. 8878-0301
STATE OF UTAH

THE CHURCH OF JESUS CHRIST OF LATTER-DAY SAINTS

Springwater 9
Vineyard UT Springwater Stake

Approx. 542 South Geneva Road
Vineyard, Utah 84059

Date: 15 Aug 2024
BHD #: 2346
County Parcel: 39-228-0001
Plan Series: G300-MH-11
Owner #: 502-2004

Drawing Issue and Revision Schedule

#	Date	Description

WALL TYPES

A113

8/15/2024 1:05:56 PM

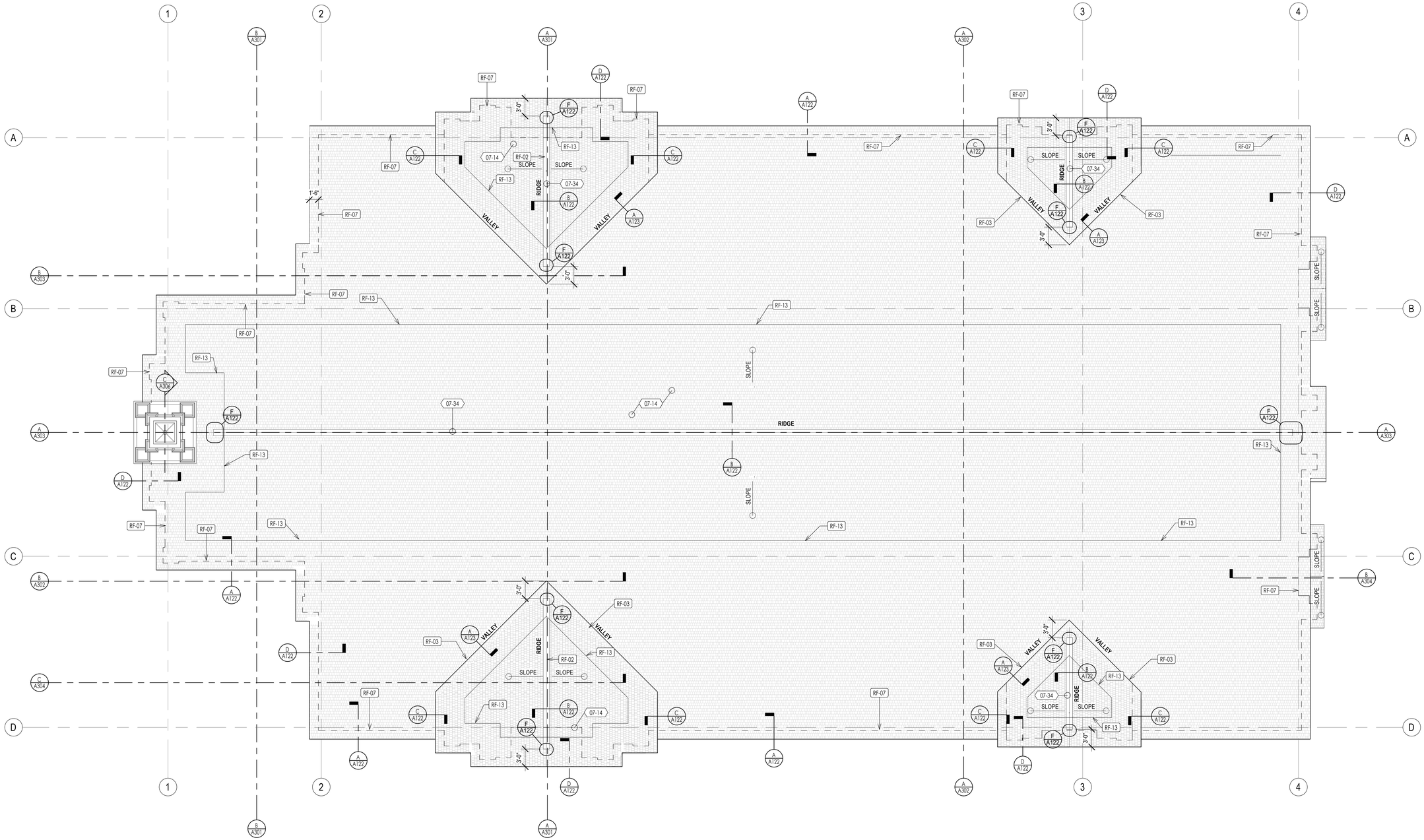

KEYNOTES

XX-XX — KEYNOTE MATERIAL

MATERIAL / SPECIFICATION KEYNOTES

07-14	COMPOSITE ASPHALT SHINGLES, SEE DETAILS & SPECIFICATIONS
07-34	ROOF RELIEF VENTS, SEE DETAILS & SPECIFICATION

FP-XX — KEYNOTE INSTRUCTION

INSTRUCTIONAL KEYNOTES

RF-02	TYPICAL RIDGE VENT, SEE DETAILS
RF-03	VALLEY FLASHING, SEE DETAILS
RF-07	LINE OF WALL BELOW ROOF, SEE OVERALL AND ENLARGED PLANS
RF-13	LINE OF SECONDARY UNDERLAYMENT

ROOF PLAN GENERAL NOTES

1. COORDINATE LOCATIONS OF ROOF PENETRATIONS WITH THE MECHANICAL SYSTEM.
2. CONTRACTOR TO PAINT VENTS AND COMBUSTION PIPING TO MATCH ROOFING COLOR. SEE SPECIFICATIONS.

ROOF PLAN
1/8" = 1'-0"
1 A121

bhd ARCHITECTS
www.bhdarchitects.com
Phone 801.571.0010
Fax 801.571.0303
Toll Free 888.571.0010
65 East Wadsworth Park Drive
Suite 205 Draper, Utah 84020

LICENSED ARCHITECT
Lafe Theadore Harris
15 Aug 2024
#5278878-0301
STATE OF UTAH

THE CHURCH OF JESUS CHRIST OF LATTER-DAY SAINTS

Springwater 9
Vineyard UT Springwater Stake
Approx. 542 South Geneva Road
Vineyard, Utah 84059

BHD #: 2346
County Parcel: 39:228:0001
Plan Series: G300-MH-11
Owner #: 502-2004
Date: 15 Aug 2024

Drawing Issue and Revision Schedule

#	Date	Description

ROOF PLAN

A121

8/15/2024 1:05:58 PM

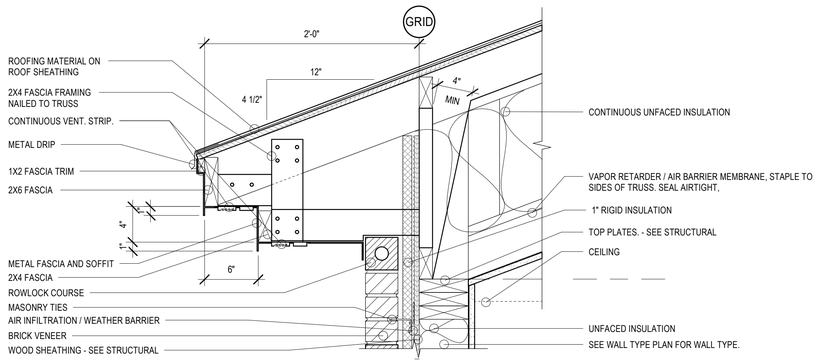

ROOF - FASCIA - TYPICAL CONDITION

1 1/2" = 1'-0"

A / A122

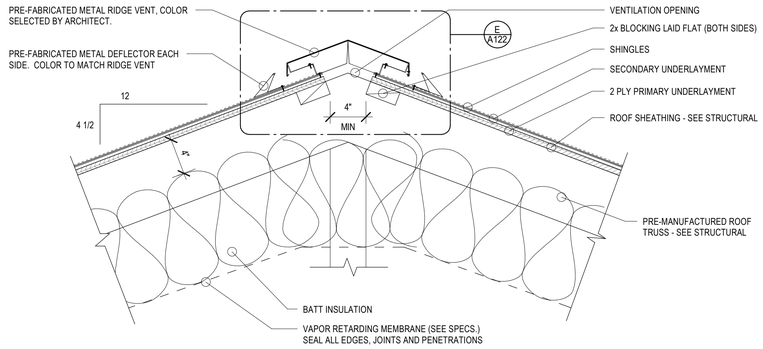

ROOF - RIDGE SECTION

1 1/2" = 1'-0"

B / A122

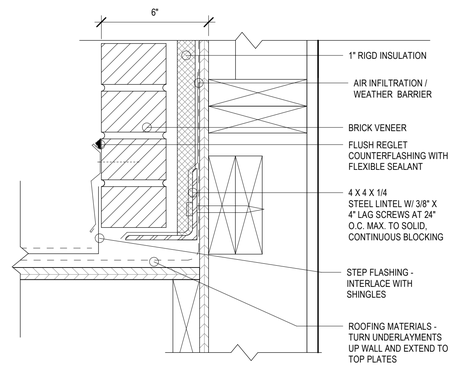

ROOF - WALL SECTION

3" = 1'-0"

C / A122

ROOF - FASCIA DETAIL @ RAKE

1 1/2" = 1'-0"

D / A122

ROOF - RIDGE VENT ENLARGED

3" = 1'-0"

E / A122

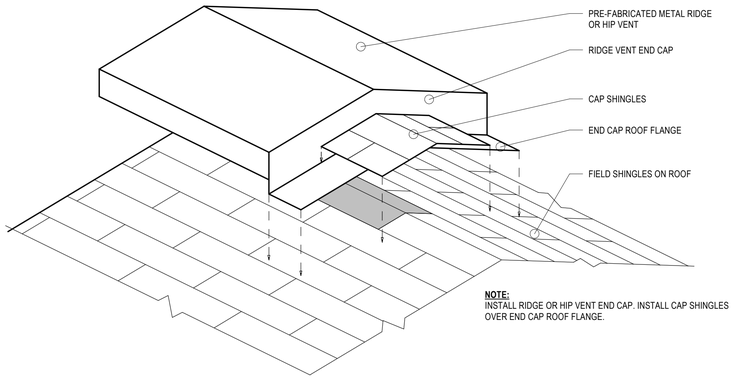

ROOF - RIDGE VENT END DETAIL

1 1/2" = 1'-0"

F / A122

bhd ARCHITECTS
www.bhdarchitects.com
Phone 801.571.0010
Fax 801.571.0303
Toll Free 888.571.0010
65 East Wadsworth Park Drive
Suite 205 Draper, Utah 84020

LICENSED ARCHITECT
Lafe Theadore Harris
15 Aug 2024
(6278878-0301)
STATE OF UTAH

THE CHURCH OF JESUS CHRIST OF LATTER-DAY SAINTS

Springwater 9
Vineyard UT Springwater Stake

Approx. 542 South Geneva Road
Vineyard, Utah 84059

Date: 15 Aug 2024
BHD #: 2346
County Parcel: 39-228-0001
Plan Series: G300-MH-11
Owner #: 502-2004

Drawing Issue and Revision Schedule

#	Date	Description

ROOF DETAILS

A122

8/15/2024 1:05:59 PM

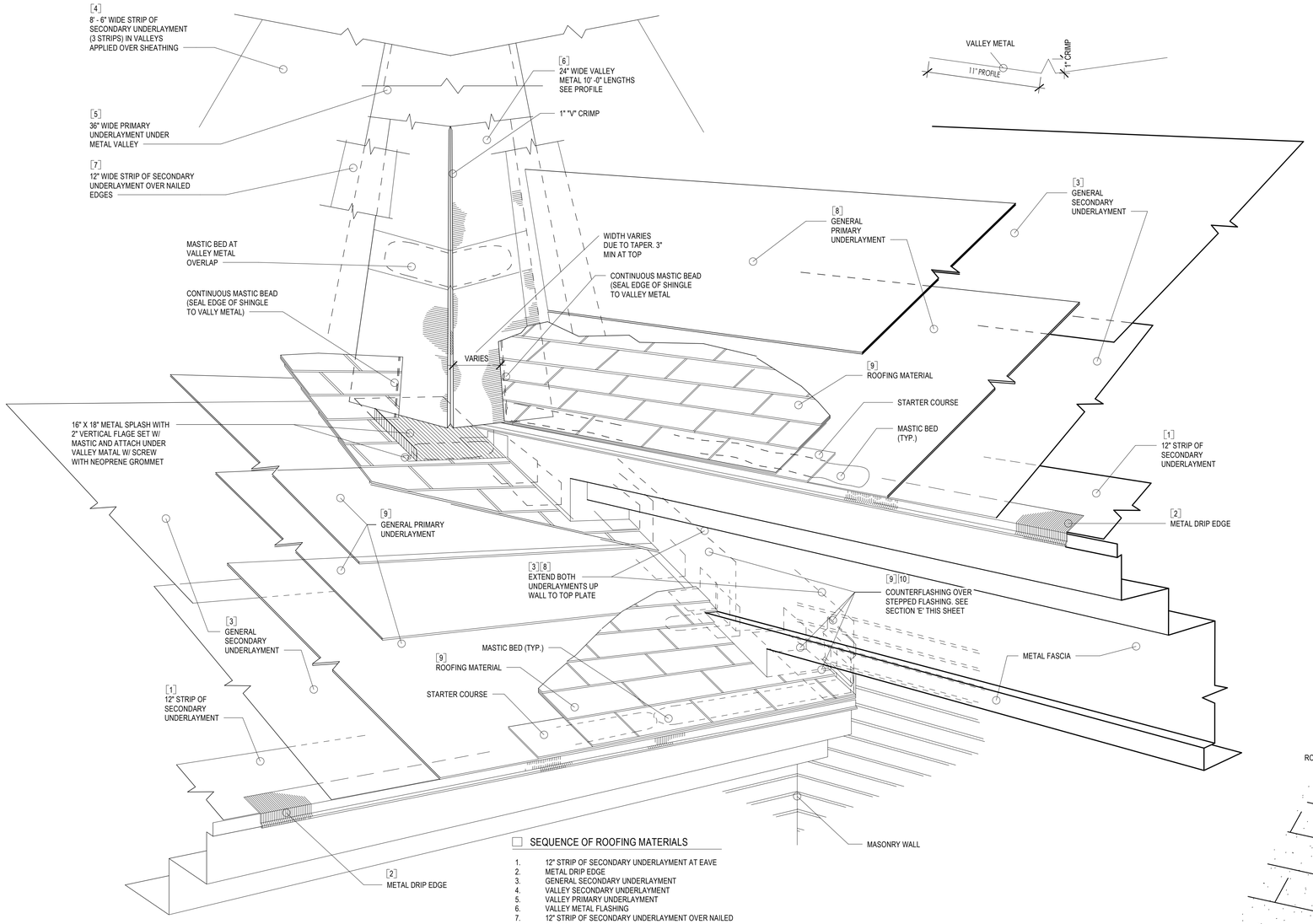

SEQUENCE OF ROOFING MATERIALS

1. 12" STRIP OF SECONDARY UNDERLAYMENT AT EAVE
2. METAL DRIP EDGE
3. GENERAL SECONDARY UNDERLAYMENT
4. VALLEY SECONDARY UNDERLAYMENT
5. VALLEY PRIMARY UNDERLAYMENT
6. VALLEY METAL FLASHING
7. 12" STRIP OF SECONDARY UNDERLAYMENT OVER NAILED EDGES
8. GENERAL PRIMARY UNDERLAYMENT
9. FIBERGLASS SHINGLES, STEP FLASHINGS
10. COUNTER FLASHINGS

ROOF - VALLEY FLASHING DETAIL (A / A123)
1 1/2" = 1'-0"

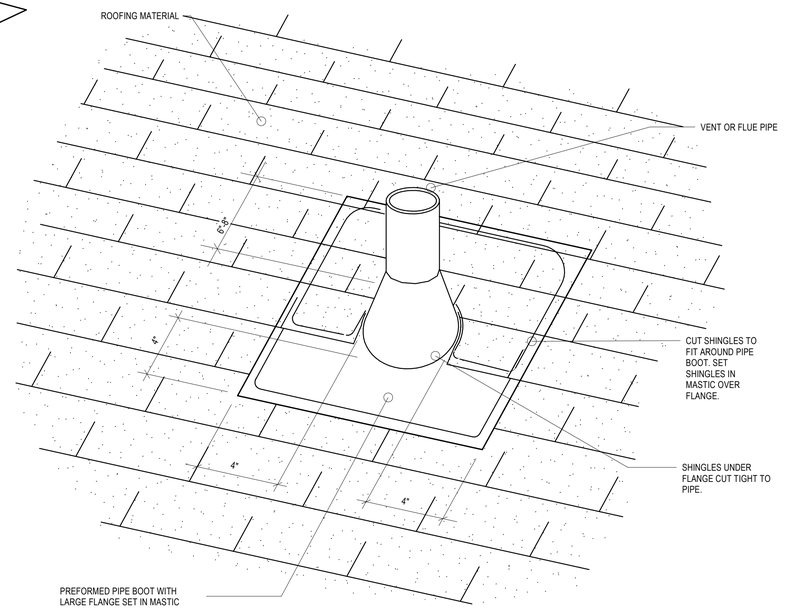

ROOF - PIPE BOOT FLANGE DETAIL (B / A123)
3/8" = 1'-0"

bhd ARCHITECTS
www.bhdarchitects.com
Phone 801.571.0010
Fax 801.571.0303
Toll Free 888.571.0010
65 East Wadsworth Park Drive
Suite 205 Draper, Utah 84020

LICENSED ARCHITECT — Lafe Theadore Harris — 15 Aug 2024 — 6278-0301 — STATE OF UTAH

THE CHURCH OF JESUS CHRIST OF LATTER-DAY SAINTS

Springwater 9
Vineyard UT Springwater Stake

Approx. 542 South Geneva Road
Vineyard, Utah 84059

Owner #: 502-2004
Plan Series: G300-MH-11
County Parcel: 39-228:0001
BHD #: 2346
Date: 15 Aug 2024

Drawing Issue and Revision Schedule

#	Date	Description

ROOF DETAILS

A123

8/15/2024 1:06:00 PM

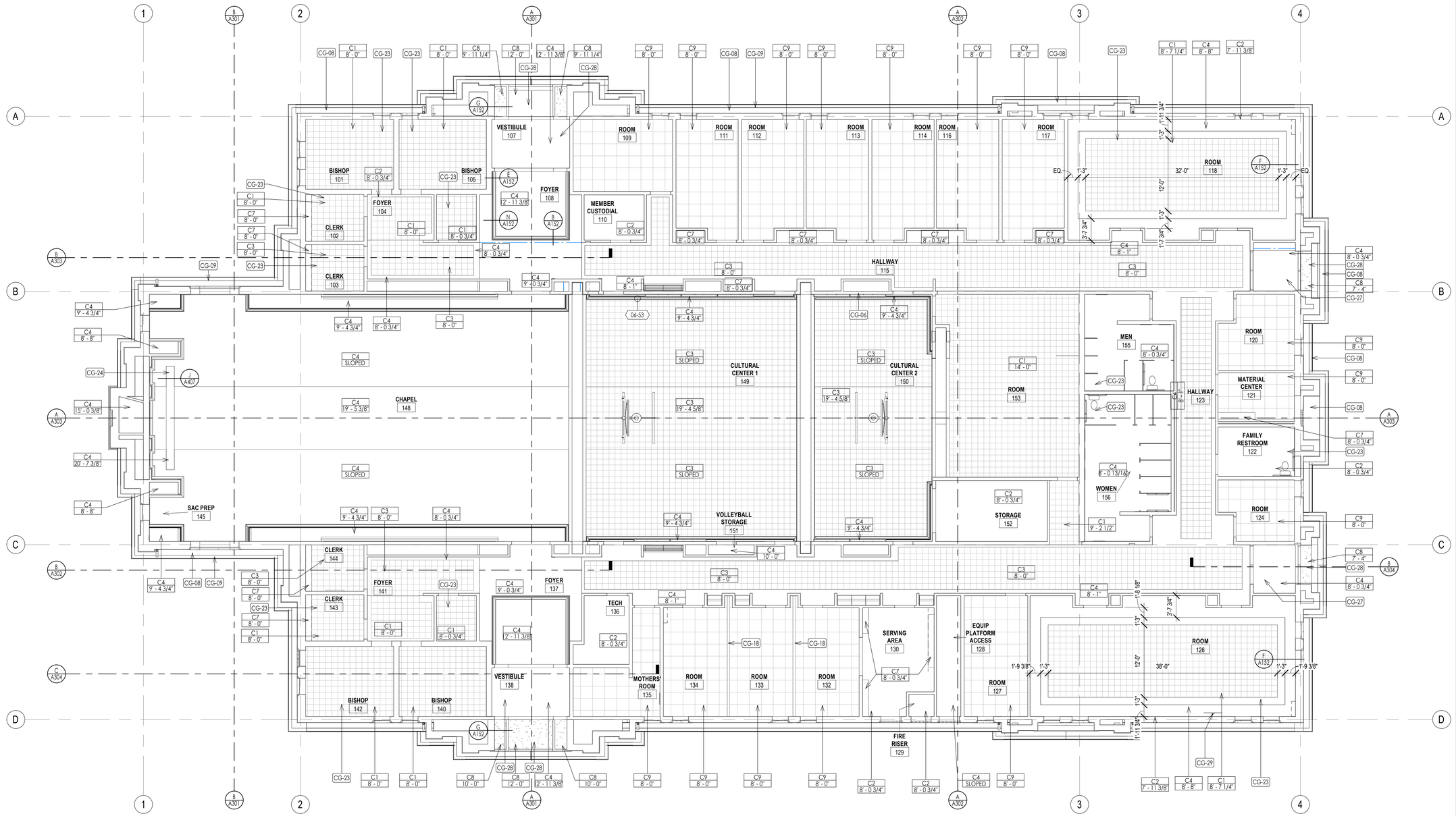

MAIN LEVEL REFLECTED CEILING PLAN

1/8" = 1'-0"

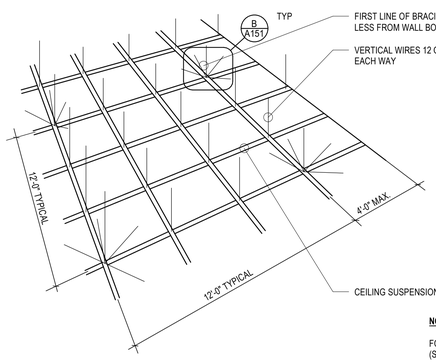

NOTES:

1. SPLAY WIRE BRACING AND COMPRESSION POSTS/STRUTS ARE ONLY REQUIRED IN SEISMIC DESIGN CATEGORIES D, E, AND F.
2. AREAS SMALLER THAN 1,000 SF AND WITH WALLS ON FOUR SIDES EXTENDING TO THE STRUCTURE NEED NOT HAVE SPLAY WIRE REINFORCING. BOUNDARY WALLS MUST BE BRACED TOP AND BOTTOM INDEPENDENT OF CEILING TO QUALIFY.
3. SEISMIC CLIP IS REQUIRED IN SEISMIC DESIGN CATEGORIES D, E, AND F.
4. USE 7/8" WALL MOULDING IN SEISMIC DESIGN CATEGORIES D, E, AND F. ATTACH TEES/RUNNERS TO WALL WITH SEISMIC CLIPS.

NOTE:

FOR METAL ACOUSTICAL SUSPENSION ASSEMLIES (SIMILAR FOR METAL SUSPENSION SYSTEM: GYPSUM BOARD)

CEILING SUSPENSION DETAIL

1 1/2" = 1'-0"

A / A151

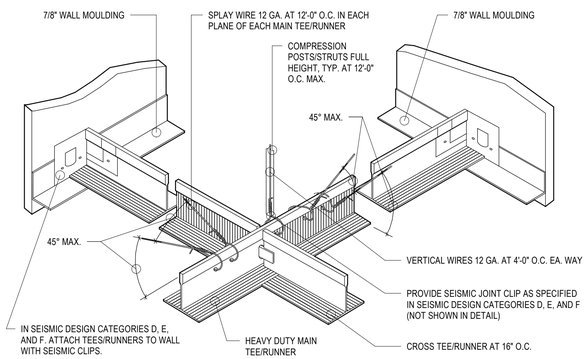

CEILING SUSPENSION DETAIL

1 1/2" = 1'-0"

B / A151

REFLECTED CEILING PLAN - FINISH SCHEDULE

CEILING TYPE / HEIGHT — C1 / 1' - 0"

CEILING TYPE / REFER TO SECTION — C1 / SLOPE

C1. CEILING SUSPENSION SYSTEM WITH GYPSUM BOARD AND ACOUSTICAL TILE
C2. CEILING SUSPENSION SYSTEM WITH GYPSUM BOARD - PAINTED
C3. ACOUSTICAL TILE ON GYPSUM BOARD
C4. GYPSUM BOARD - PAINTED
C5. METAL SOFFIT - SEE A/A122
C6. CONTINUOUS VENT STRIP
C7. WOOD FURRED DOWN OVER CABINETS - SEE A/A407
C8. EXTERIOR STUCCO SYSTEM SOFFIT
C9. SUSPENDED CEILING TILE 2' X 2'. PROVIDE SOUND ATTENUATION BLANKETS ABOVE CEILING GRID.

KEYNOTES

XX-XX — KEYNOTE MATERIAL

MATERIAL / SPECIFICATION KEYNOTES

06-53	HARDWOOD TRIM, SEE DETAILS & SPECIFICATION

CEILING PLAN GENERAL NOTES

1. WALL MOUNTED LIGHT FIXTURES THAT OCCUR BELOW CEILING LINE ARE NOT SHOWN.
2. MOUNTING OF SPEAKERS: CORRIDOR - SEE Q/A152.
3. PROVIDE SEISMIC BRACING AT ALL CEILING SUSPENSION SYSTEMS.
4. AT CORRIDORS, ACOUSTICAL CEILING TILE IS TO BE 6 TILES ACROSS WITH A BORDER OF GYPSUM BOARD AS SHOWN ON DRAWINGS.
5. FOR SUSPENSION CEILING SYSTEM DETAILS, SEE A/A151 & B/A151.
6. COORDINATE GRILLE LOCATION WITH MECHANICAL DRAWINGS.
7. ALL CEILING HEIGHTS REFERENCED FINISH FLOOR 100'-0"

FP-XX — KEYNOTE INSTRUCTION

INSTRUCTIONAL KEYNOTES

CG-06	CEILING SOFFIT W/ GYPSUM BOARD & HARDWOOD TRIM, COORD. W. DETAILS & PAINT AS SELECTED
CG-08	EXT. METAL SOFFIT, COLOR AS SEL. BY ARCHITECT. SEE DETAILS
CG-09	CONTINIOUS VENT STRIP, SEE DETAILS
CG-18	FOLDING PARTITION & TRACK, SEE DETAILS & SPECIFICATIONS
CG-23	INSULATE THE ROOM CEILING ABOVE FOR SOUND CONTROL (R-19)
CG-24	DROP DOWN PROJECTION SCREEN, SEE DETAILS & SPECIFICATIONS
CG-27	INSULATE ABOVE CEILING FOR FREEZE PREVENTION (R-19)
CG-28	INSULATE AND TOTALLY FILL VOID UP TO ROOF FOR FREEZE AND FIRE PROTECTION
CG-29	WALL/CEILING MOUNT TV - COORDINATE WITH PROJECT MANAGER FOR PREFERRED MOUNTING METHOD. COORDINATE POWER ACCORDINGLY.

bhd ARCHITECTS
www.bhdarchitects.com
Phone 801.571.0010
Fax 801.571.0303
Toll Free 888.571.0010
65 East Wadsworth Park Drive
Suite 205 Draper, Utah 84020

LICENSED ARCHITECT
Lafe Theadore Harris
15 Aug 2024
(Rx.) 8878-0301
STATE OF UTAH

THE CHURCH OF JESUS CHRIST OF LATTER-DAY SAINTS

Springwater 9
Vineyard UT Springwater Stake
Approx. 542 South Geneva Road
Vineyard, Utah 84059

Owner #: 502-2004
Plan Series: G300-MH-11
County Parcel: 39-228:0001
BHD #: 2346
Date: 15 Aug 2024

Drawing Issue and Revision Schedule

#	Date	Description

REFLECTED CEILING PLAN

A151

8/15/2024 1:06:04 P.M.

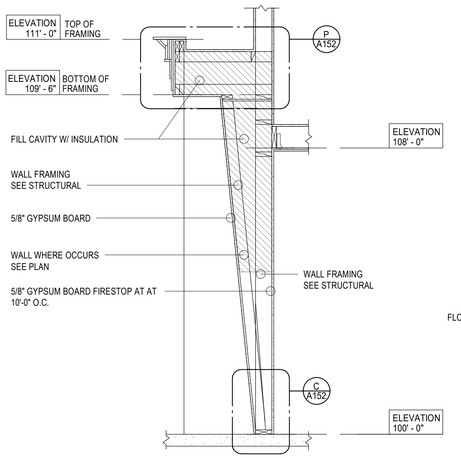

SLANT WALL SECTION

1/2" = 1'-0"

A A152

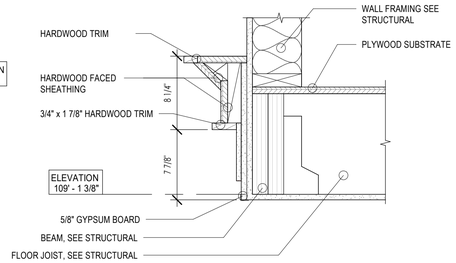

TRIM DETAIL - EQUIPMENT PLATFORM

1 1/2" = 1'-0"

B A152

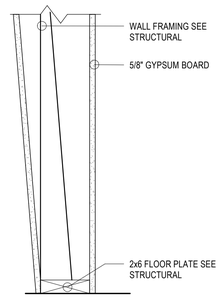

SLANT WALL FRAMING DETAIL

1 1/2" = 1'-0"

C A152

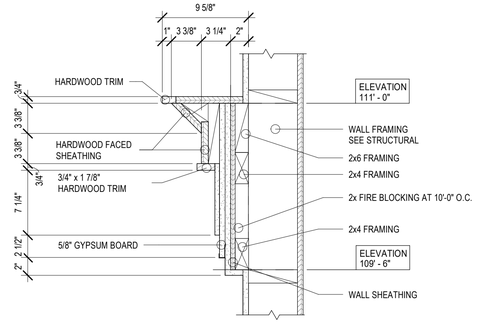

TRIM DETAIL - CULTURAL HALL

1 1/2" = 1'-0"

D A152

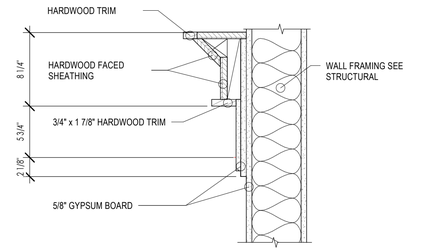

TRIM DETAIL - FOYER

1 1/2" = 1'-0"

E A152

ROOF FRAMING DETAIL

1 1/2" = 1'-0"

F A152

SOFFIT DETAIL AT ENTRY

1 1/2" = 1'-0"

G A152

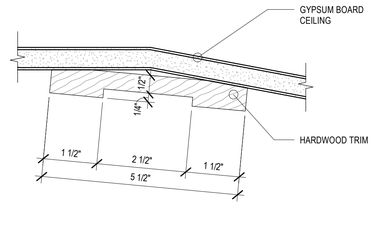

TRIM DETAIL

6" = 1'-0"

H A152

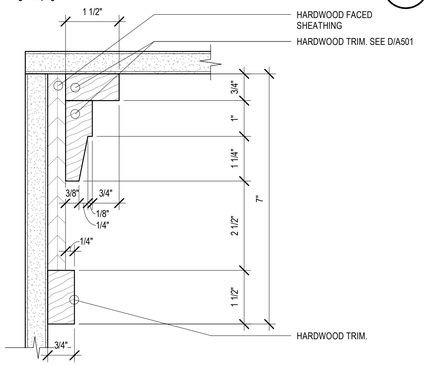

CEILING TRIM DETAIL

6" = 1'-0"

K A152

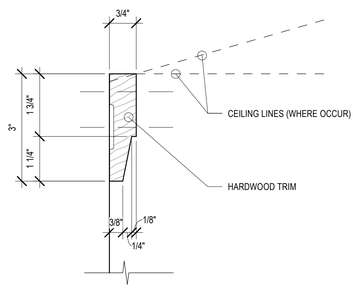

CROWN MOULDING

6" = 1'-0"

L A152

ENLARGED SOFFIT DETAIL AT ENTRY

3" = 1'-0"

M A152

LIGHT COVE - FOYER

1 1/2" = 1'-0"

N A152

COVE DETAIL

1 1/2" = 1'-0"

P A152

4" SPEAKER ENCLOSURE DETAIL

3" = 1'-0"

Q A152

bhd ARCHITECTS
www.bhdarchitects.com
Phone 801.571.0010
Fax 801.571.0303
Toll Free 888.571.0010
65 East Wadsworth Park Drive
Suite 205 Draper, Utah 84020

LICENSED ARCHITECT Lafe Theadore Harris 15 Aug 2024 (8878-0301) STATE OF UTAH

THE CHURCH OF JESUS CHRIST OF LATTER-DAY SAINTS

Springwater 9
Vineyard UT Springwater Stake

Approx. 542 South Geneva Road
Vineyard, Utah 84059

Owner #: 502-2004
Plan Series: G300-MH-11
County Parcel: 39-228-0001
BHD #: 2346
Date: 15 Aug 2024

Drawing Issue and Revision Schedule

#	Description	Date

LIGHT COVE AND CEILING TRIM DETAILS

A152

8/15/2024 1:04:06 PM

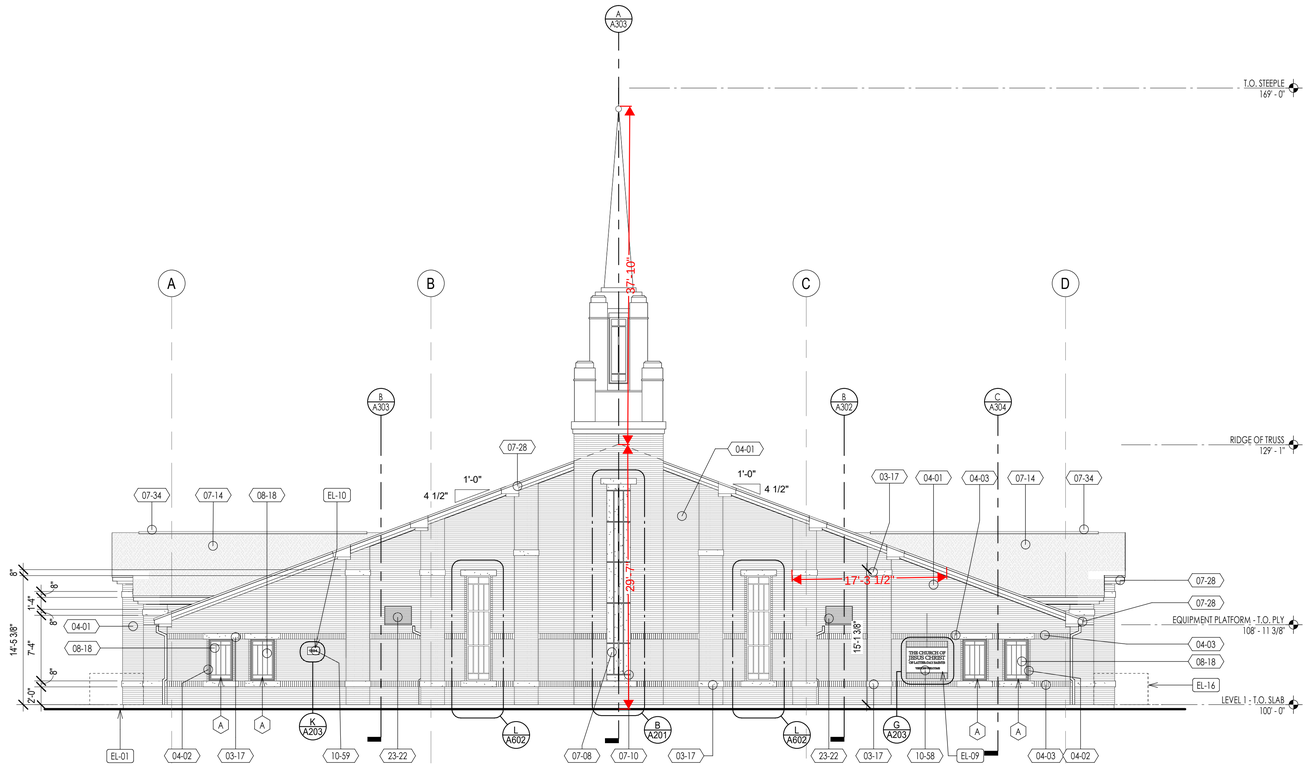

FRONT ELEVATION

1/8" = 1'-0"

A201

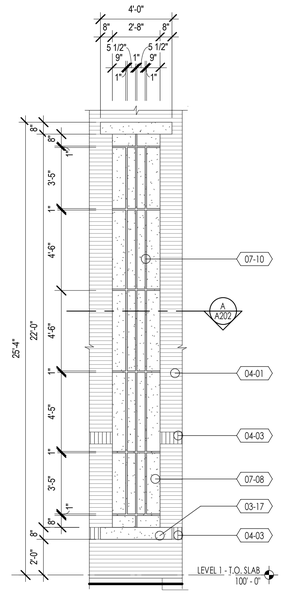

EIFS DETAIL TYPE 1

1/4" = 1'-0"

B A201

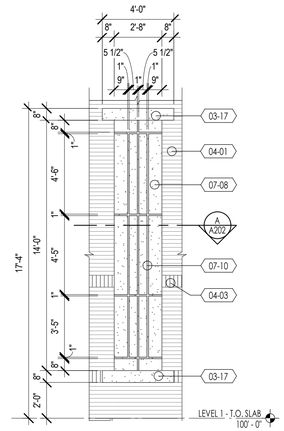

EIFS DETAIL TYPE 2

1/4" = 1'-0"

C A201

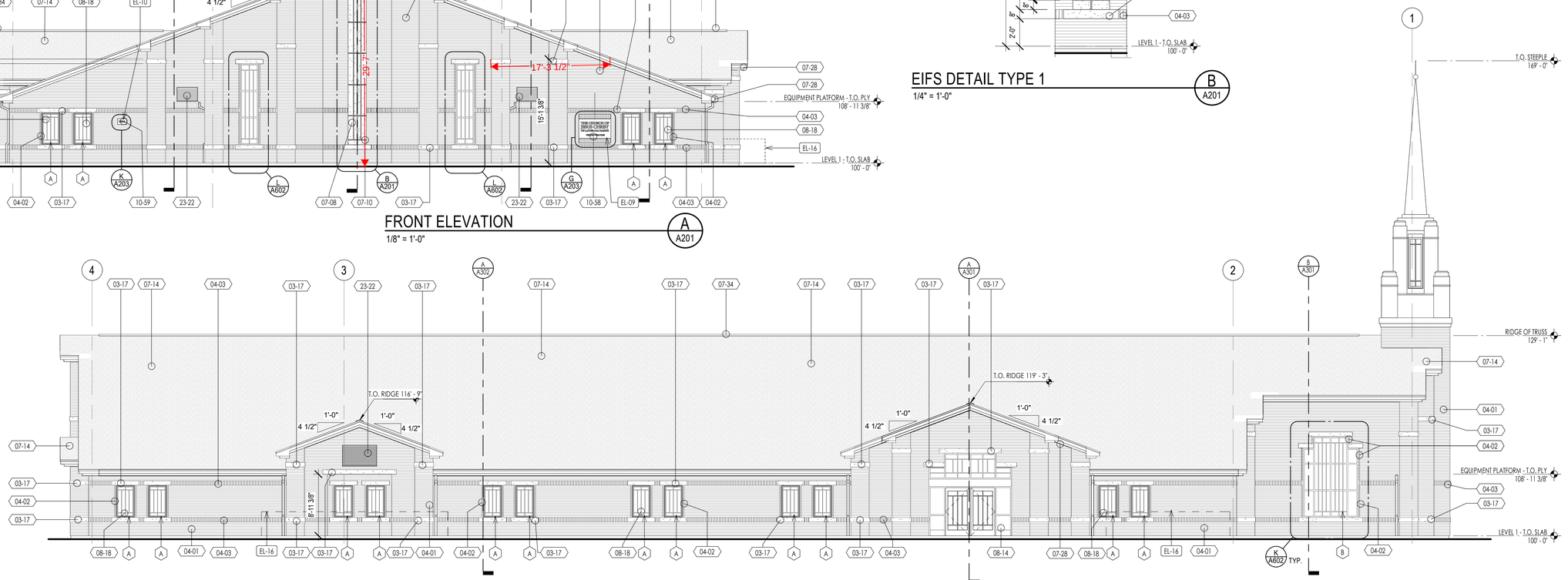

LEFT ELEVATION

1/8" = 1'-0"

D A201

KEYNOTES

XX-XX — KEYNOTE MATERIAL

FP-XX — KEYNOTE INSTRUCTION

MATERIAL / SPECIFICATION KEYNOTES

03-17	ARCHITECTURAL PRE-CAST CONCRETE, SEE DETAILS & SPECIFICATIONS
04-01	BRICK VENEER MASONRY, RUNNING BOND, SEE DETAILS & SPECIFICATIONS
04-02	BRICK VENEER MASONRY, STACK BOND, SEE DETAILS & SPECIFICATIONS
04-03	BRICK VENEER MASONRY, SOLDIER COURSE, SEE DETAILS & SPECIFICATIONS
07-08	WATER-MANAGED EIFS EXTERIOR WALL FINISH SYSTEM, SEE DETAILS & SPECIFICATIONS
07-10	WATER-MANAGED EIFS ARCHITECTUAL SCORING JOINT, SEE DETAILS & SPECIFICATIONS
07-14	COMPOSITE ASPHALT SHINGLES, SEE DETAILS & SPECIFICATIONS
07-28	METAL SOFFIT PANELS & TRIM, SEE DETAILS & SPECIFICATION
07-34	ROOF RELIEF VENTS, SEE DETAILS & SPECIFICATION
08-14	EXTERIOR & INTERIOR ALUMINIUM STOREFRONT ENTRANCES, SEE SCHEDULE & SPECIFICATION
08-18	VINYL FRAMED FIXED WINDOWS, SEE SCHEDULE, DETAILS & SPECIFICATIONS
10-58	ENGRAVED STONE LDS PANEL SIGN, SEE DETAILS & SPECIFICATION
10-59	ENGRAVED ADDRESS STONE SIGN, SEE DETAILS & SPECIFICATION
23-22	HVAC ALUMINIUM LOUVER, SEE MECHANICAL SPECS

INSTRUCTIONAL KEYNOTES

EL-01	VERIFY THAT ALL GRADE SLOPES AWAY FROM BUILDING. SLOPE SHALL BE 6" SLOPE IN FIRST 10'-0"
EL-09	STONE MEETINGHOUSE SIGN MOUNTED ON LEFT OR RIGHT AS SELECTED BY ARCHITECT. SEE DETAILS
EL-10	BUILDING ADDRESS SIGN. MOUNT AT LOCAITON AS SELECTED BY ARCHITECT AND VISIBLE FROM THE STREET. SEE DETAILS
EL-16	MECHANICAL ENCLOSURE WALL (SHOWN DASHED FOR CLARITY). SEE CIVIL & MECHANICAL DRAWINGS

bhd ARCHITECTS
www.bhdarchitects.com
Phone 801.571.0010
Fax 801.571.0303
Toll Free 888.571.0010
65 East Wadsworth Park Drive
Suite 205 Draper, Utah 84020

LICENSED ARCHITECT
Lafe Theadore Harris
15 Aug 2024
No. 8878-0301
STATE OF UTAH

THE CHURCH OF JESUS CHRIST OF LATTER-DAY SAINTS

Springwater 9
Vineyard UT Springwater Stake

Approx. 540 South Geneva Road
Vineyard, Utah 84059

Owner #: 502-2004
Plan Series: G300-MH-11
County Parcel: 39:228:0001
BHD #: 2346
Date: 15 Aug 2024

Drawing Issue and Revision Schedule

#	Date	Description

BUILDING ELEVATIONS

A201

8/15/2024 1:06:16 PM

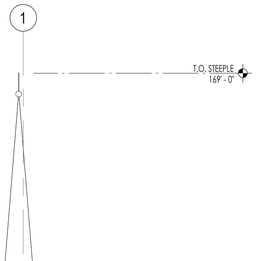

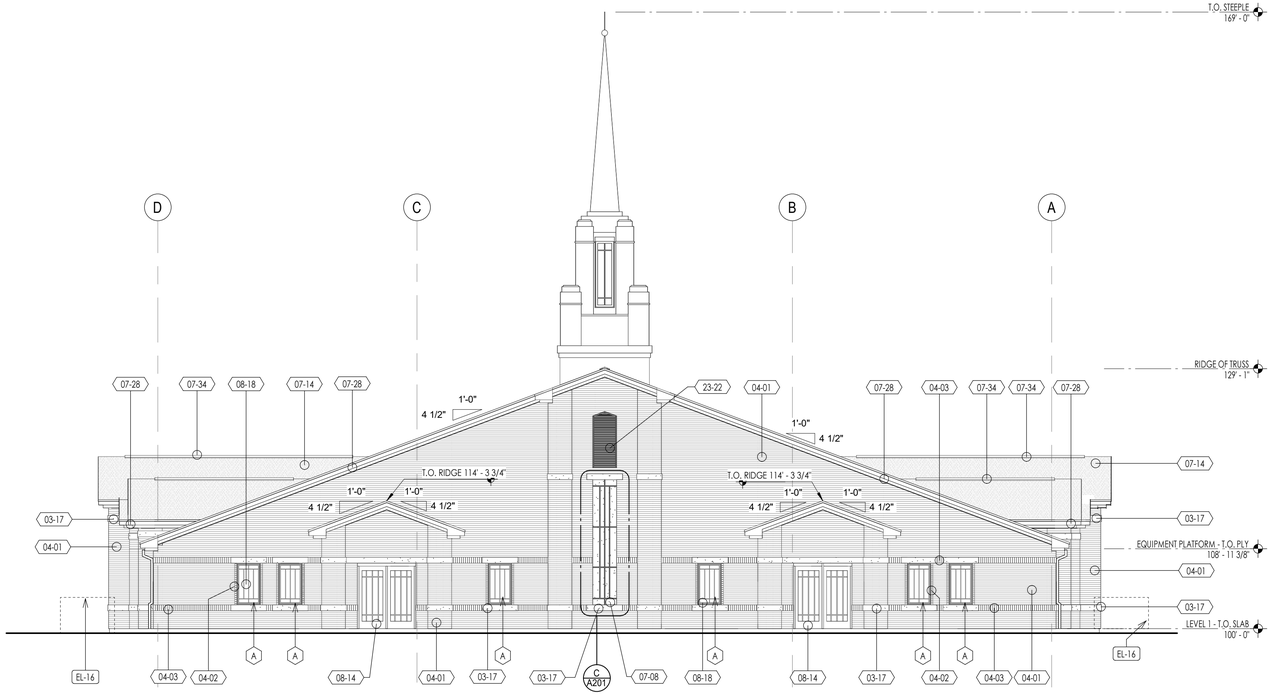

REAR ELEVATION

1/8" = 1'-0" — B A202

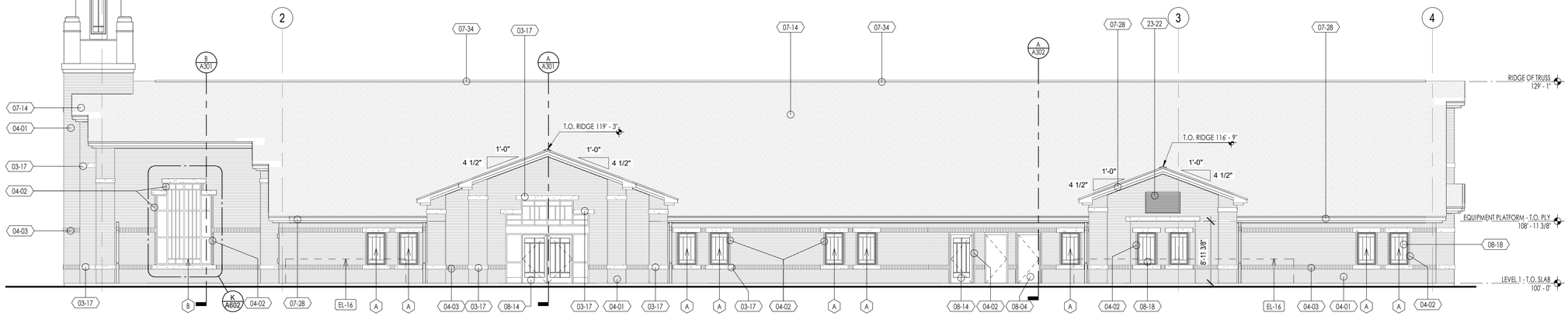

RIGHT ELEVATION

1/8" = 1'-0" — D A202

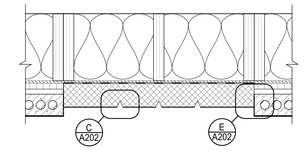

EIFS - SECTION

1" = 1'-0" — A A202

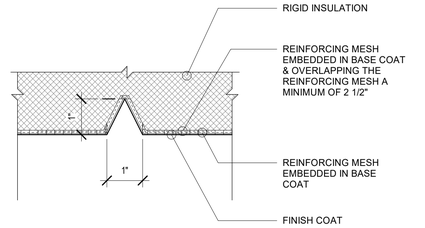

EIFS - ENLARGED REVEAL DETAIL

6" = 1'-0" — C A202

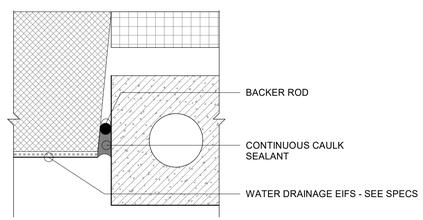

EIFS - ENLARGED EDGE DETAIL

6" = 1'-0" — E A202

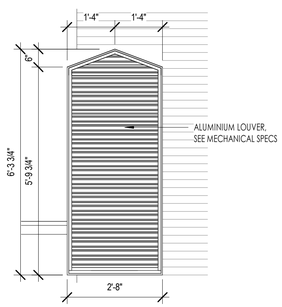

ALUMINIUM LOUVER DETAIL

1/2" = 1'-0" — F A202

KEYNOTES

XX-XX — KEYNOTE MATERIAL

MATERIAL / SPECIFICATION KEYNOTES

03-17	ARCHITECTURAL PRE-CAST CONCRETE, SEE DETAILS & SPECIFICATIONS
04-01	BRICK VENEER MASONRY, RUNNING BOND, SEE DETAILS & SPECIFICATIONS
04-02	BRICK VENEER MASONRY, STACK BOND, SEE DETAILS & SPECIFICATIONS
04-03	BRICK VENEER MASONRY, SOLDIER COURSE, SEE DETAILS & SPECIFICATIONS
07-08	WATER-MANAGED EIFS EXTERIOR WALL FINISH SYSTEM, SEE DETAILS & SPECIFICATIONS
07-14	COMPOSITE ASPHALT SHINGLES, SEE DETAILS & SPECIFICATIONS
07-28	METAL SOFFIT PANELS & TRIM, SEE DETAILS & SPECIFICATION
07-34	ROOF RELIEF VENTS, SEE DETAILS & SPECIFICATION
08-04	EXTERIOR HOLLOW METAL INSULATED DOOR FRAME, SEE SCHEDULE & SPECIFICATION
08-14	EXTERIOR & INTERIOR ALUMINIUM STOREFRONT ENTRANCES, SEE SCHEDULE & SPECIFICATION
08-18	VINYL FRAMED FIXED WINDOWS, SEE SCHEDULE, DETAILS & SPECIFICATIONS
23-22	HVAC ALUMINIUM LOUVER, SEE MECHANICAL SPECS

FP-XX — KEYNOTE INSTRUCTION

INSTRUCTIONAL KEYNOTES

EL-16	MECHANICAL ENCLOSURE WALL (SHOWN DASHED FOR CLARITY). SEE CIVIL & MECHANICAL DRAWINGS

bhd ARCHITECTS
www.bhdarchitects.com
Phone 801.571.0010
Fax 801.571.0303
Toll Free 888.571.0010
65 East Wadsworth Park Drive
Suite 205 Draper, Utah 84020

LICENSED ARCHITECT
Lafe Theadore Harris
15 Aug 2024
#6878-0301
STATE OF UTAH

THE CHURCH OF JESUS CHRIST OF LATTER-DAY SAINTS

Springwater 9
Vineyard UT Springwater Stake

Approx. 542 South Geneva Road
Vineyard, Utah 84059

Owner #: 502-2004
Plan Series: G300-MH-11
County Parcel: 39-228-0001
BHD #: 2346
Date: 15 Aug 2024

Drawing Issue and Revision Schedule

#	Date	Description

BUILDING ELEVATIONS

A202

8/15/2024 1:04:22 PM

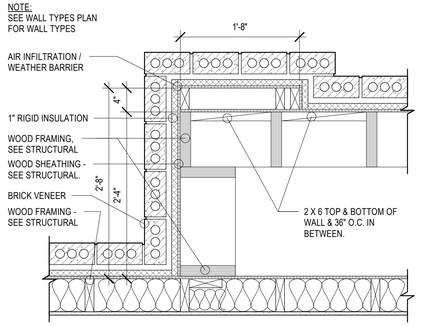

PILASTER DETAIL — A / A203
1" = 1'-0"

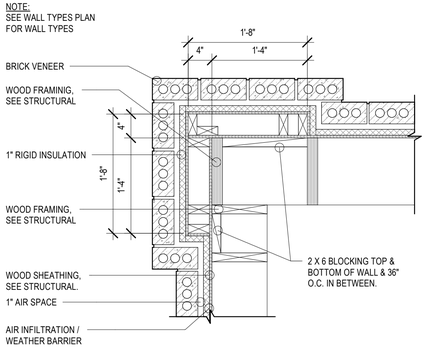

PILASTER DETAIL — B / A203
1" = 1'-0"

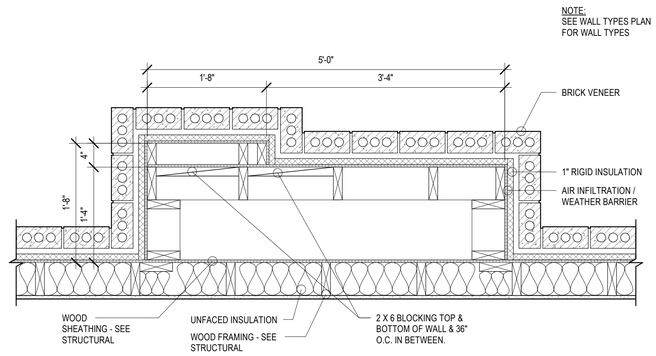

PILASTER DETAIL — C / A203
1" = 1'-0"

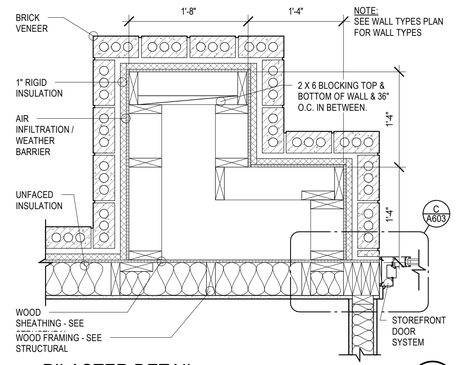

PILASTER DETAIL — D / A203
1" = 1'-0"

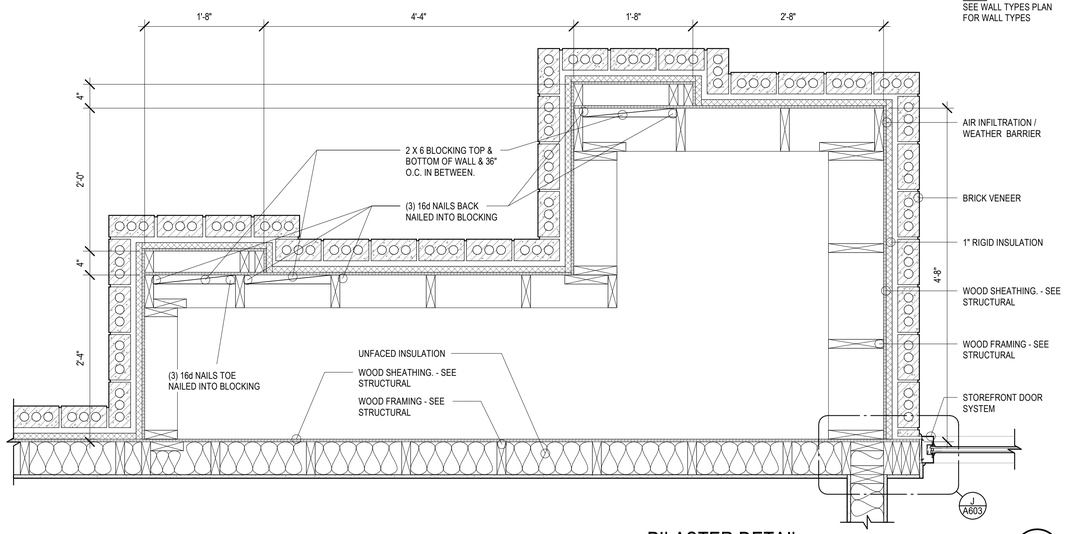

PILASTER DETAIL — E / A203
1" = 1'-0"

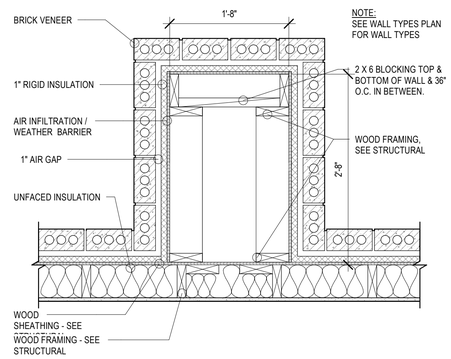

PILASTER DETAIL — F / A203
1" = 1'-0"

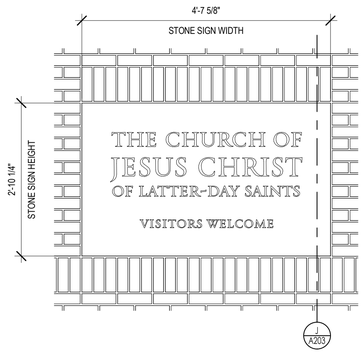

MEETING HOUSE STONE SIGN — G / A203
3/4" = 1'-0"

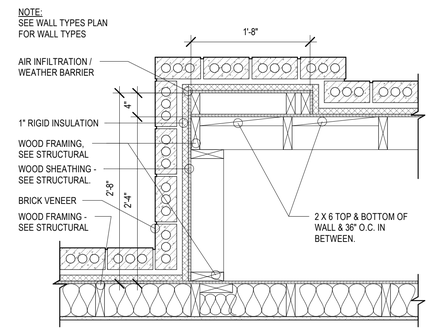

PILASTER DETAIL — H / A203
1" = 1'-0"

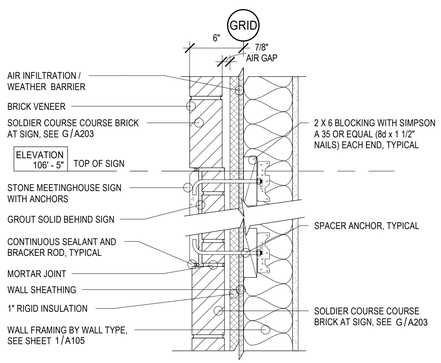

STONE SIGN DETAIL — J / A203
1 1/2" = 1'-0"

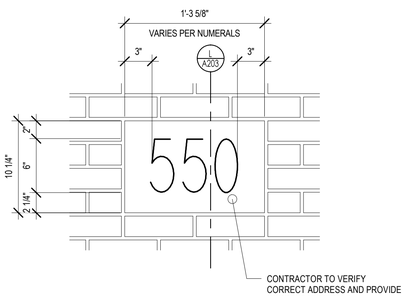

MEETINGHOUSE ADDRESS SIGN — K / A203
1 1/2" = 1'-0"

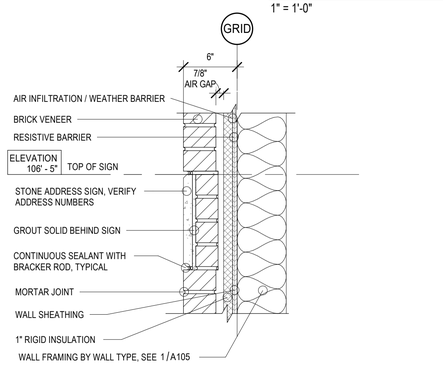

ADDRESS SIGN DETAIL — L / A203
1 1/2" = 1'-0"

bhd ARCHITECTS
www.bhdarchitects.com
Phone 801.571.0010
Fax 801.571.0303
Toll Free 888.571.0010
65 East Wadsworth Park Drive
Suite 205 Draper, Utah 84020

LICENSED ARCHITECT — Lafe Theadore Harris — 15 Aug 2024 — 6278878-0301 — STATE OF UTAH

THE CHURCH OF JESUS CHRIST OF LATTER-DAY SAINTS

Springwater 9
Vineyard UT Springwater Stake
Approx. 542 South Geneva Road
Vineyard, Utah 84059

BHD #: 2346
Owner #: 502-2004
Plan Series: G300-MH-11
County Parcel: 39-228-0001
Date: 15 Aug 2024

Drawing Issue and Revision Schedule

#	Date	Description

EXTERIOR PLAN DETAILS

A203

8/15/2024 1:04:24 PM

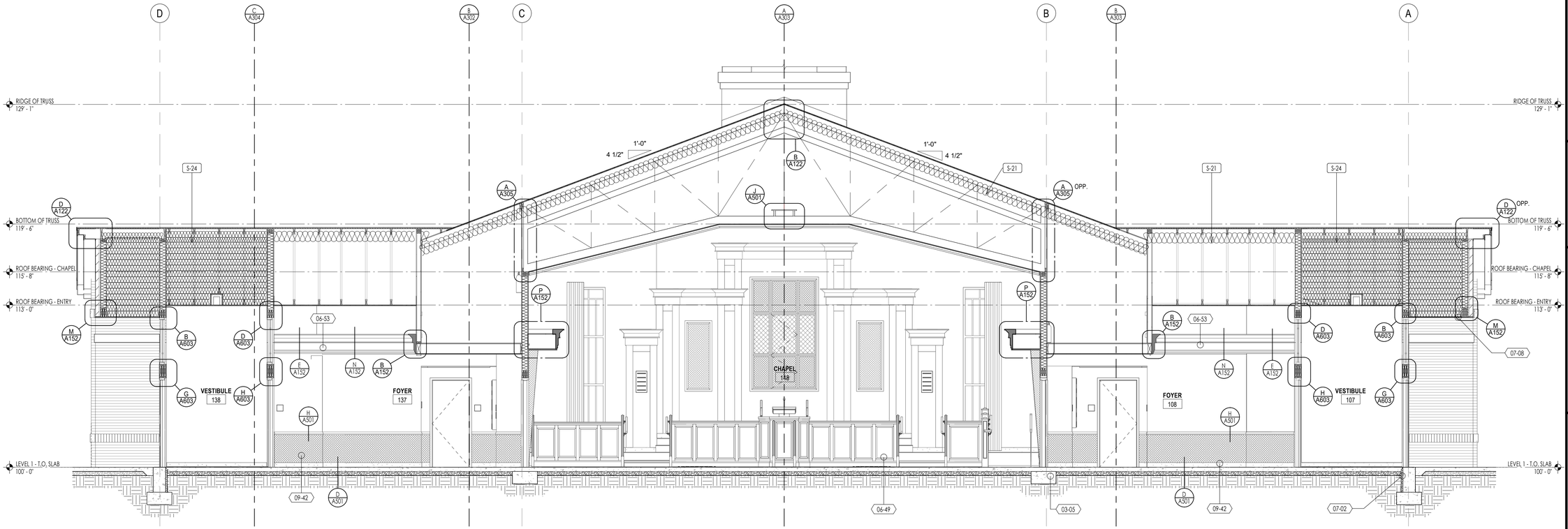

BUILDING SECTION

1/4" = 1'-0"

A A301

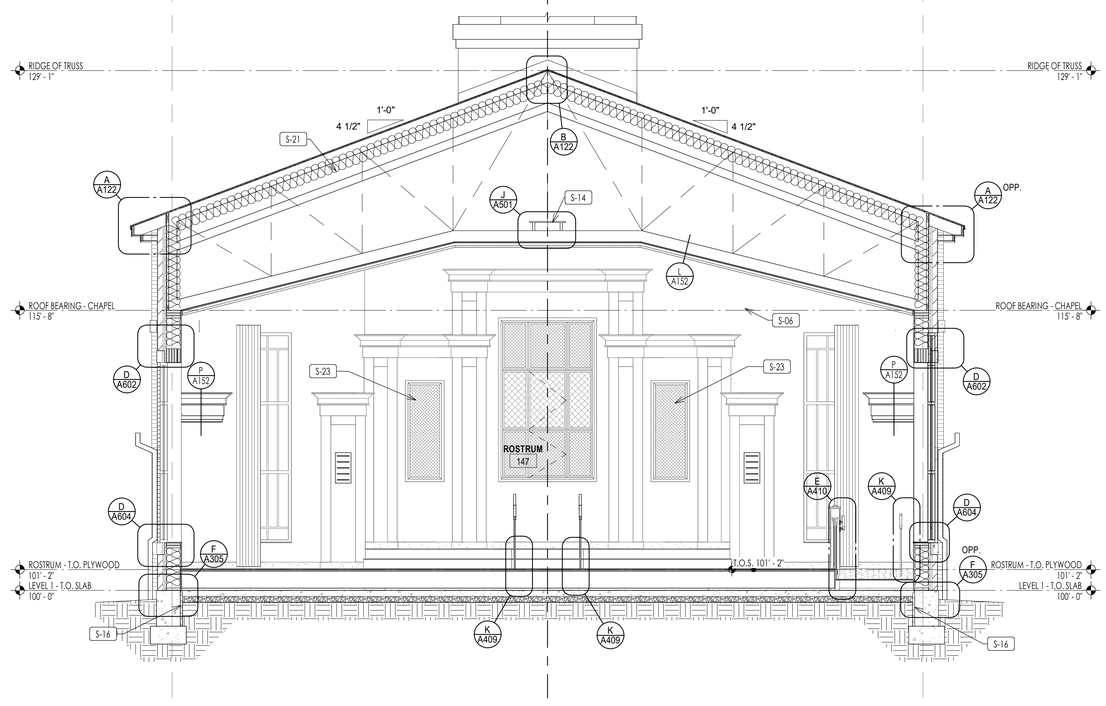

BUILDING SECTION

1/4" = 1'-0"

B A301

KEYNOTES

XX-XX — KEYNOTE MATERIAL

MATERIAL / SPECIFICATION KEYNOTES

03-05	CAST IN PLACE FOOTINGS, SEE STRUCTURAL DRAWINGS & SPECIFICATIONS
06-49	ROSTRUM CASEWORK, SEE DETAILS & SPECIFICATION
06-53	HARDWOOD TRIM, SEE DETAILS & SPECIFICATION
07-02	PERIMETER RIGID BOARD INSULATION UNDER SLABS-ON-GRADE, SEE SCHEDULE, DETAILS, & SPECIFICATION
07-08	WATER-MANAGED EIFS EXTERIOR WALL FINISH SYSTEM, SEE DETAILS & SPECIFICATIONS
09-42	SISAL WALL COVERING AS SELECTED, SEE FINISH SCHEDULE/ SPECIFICATION

FP-XX — KEYNOTE INSTRUCTION

INSTRUCTIONAL KEYNOTES

S-06	ELECTRICAL EQUIPMENT/FIXTURES, SEE ELECTRICAL DRAWINGS
S-14	CATWALK, SEE DETAILS
S-16	3" RIGID INSULATION AT INTERIOR FACE OF CONCRETE FROM TOP OF SLAB TO TOP OF FOOTING
S-21	VAPOR RETARDER/ AIR BARRIER MEMBRANE, STAPLE TO SIDES OF TRUSS. SEAL AIRTIGHT, SEE E/A303
S-23	WALL COVERING B
S-24	FILL ATTIC SPACE WITH UNFACED INSULATION AS SHOWN, COORDINATE WITH MECHANICAL

bhd ARCHITECTS
www.bhdarchitects.com
Phone 801.571.0010
Fax 801.571.0303
Toll Free 888.571.0010
65 East Wadsworth Park Drive
Suite 205 Draper, Utah 84020

LICENSED ARCHITECT Lafe Theadore Harris 15 Aug 2024 6578-0301 STATE OF UTAH

THE CHURCH OF JESUS CHRIST OF LATTER-DAY SAINTS

Springwater 9
Vineyard UT Springwater Stake

Approx. 542 South Geneva Road
Vineyard, Utah 84059

BHD #: 2346
County Parcel: 39-228-0001
Plan Series: G300-MH-11
Owner #: 502-2004
Date: 15 Aug 2024

Drawing Issue and Revision Schedule

#	Date	Description

BUILDING SECTIONS

A301

8/15/2024 1:06:27 PM

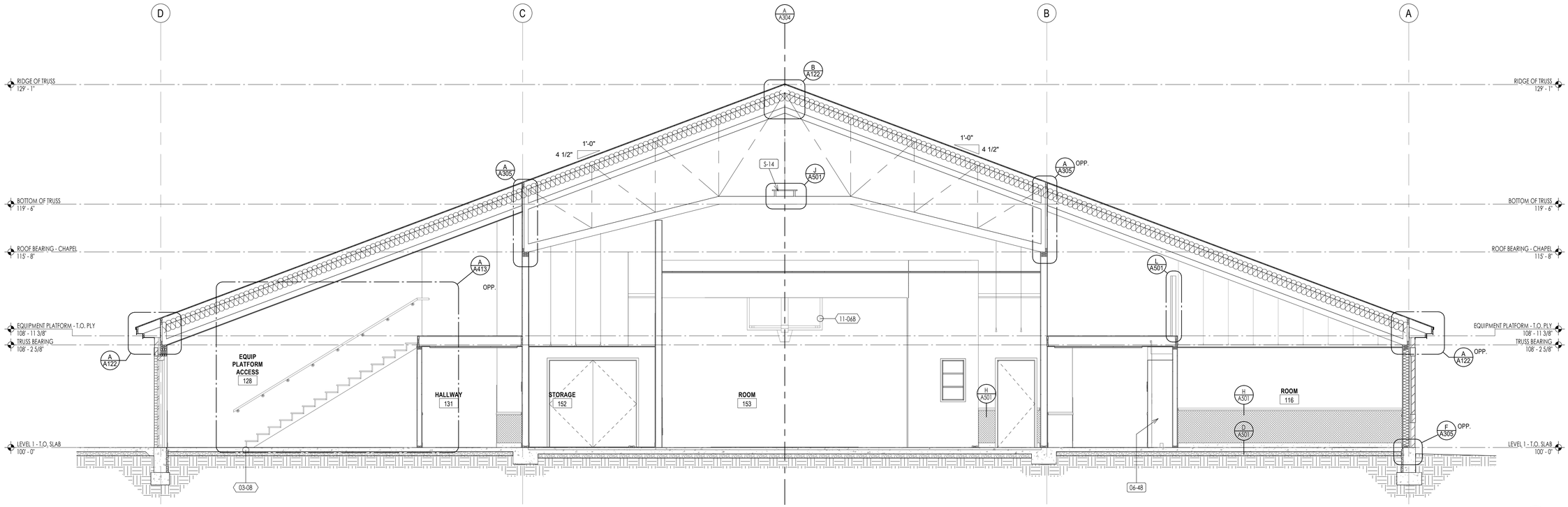

BUILDING SECTION

1/4" = 1'-0"

A302

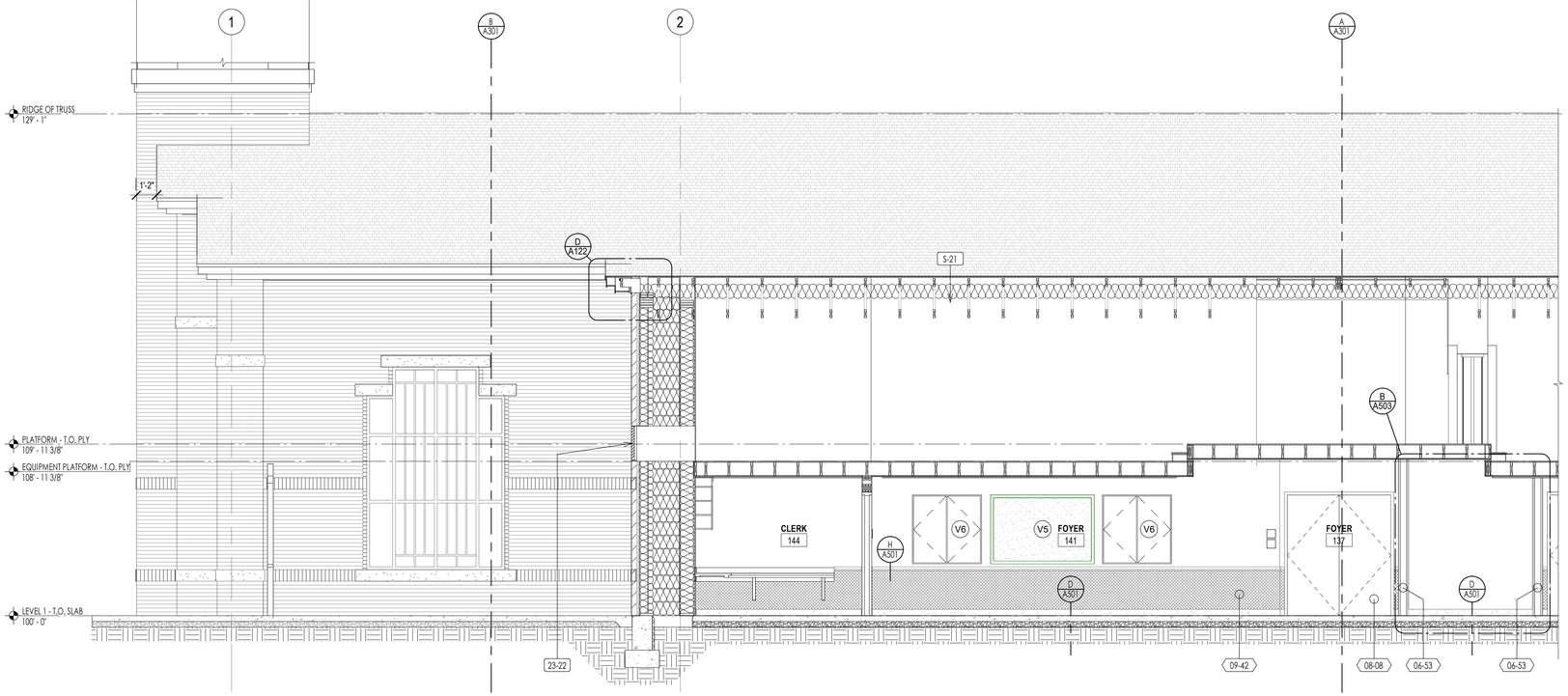

BUILDING SECTION

1/4" = 1'-0"

B A302

KEYNOTES

XX-XX — KEYNOTE MATERIAL

MATERIAL / SPECIFICATION KEYNOTES

03-08	CAST IN PLACE INTERIOR CONCRETE SLABS, SEE STRUCTURAL DRAWINGS & SPECIFICATIONS
06-48	WOOD VENEER FACED ARCHITECTURAL CABINETS, SEE DETAILS & SPECIFICATION
06-53	HARDWOOD TRIM, SEE DETAILS & SPECIFICATION
08-08	INTERIOR SOLID CORE FLUSH WOOD DOORS, FACTORY FINISHED, SEE SCHEDULE & SPECIFICATION
09-42	SISAL WALL COVERING AS SELECTED, SEE FINISH SCHEDULE/ SPECIFICATION
11-06B	ELECTRICALLY OPERATED FOLDING BASKETBALL STANDARD, OPTION '2', SEE DETAILS & SPECIFICATIONS
23-22	HVAC ALUMINIUM LOUVER, SEE MECHANICAL SPECS

FP-XX — KEYNOTE INSTRUCTION

INSTRUCTIONAL KEYNOTES

S-14	CATWALK, SEE DETAILS
S-21	VAPOR RETARDER/ AIR BARRIER MEMBRANE, STAPLE TO SIDES OF TRUSS. SEAL AIRTIGHT, SEE E/A303

bhd ARCHITECTS
www.bhdarchitects.com
Phone 801.571.0010
Fax 801.571.0303
Toll Free 888.571.0010
65 East Wadsworth Park Drive
Suite 205 Draper, Utah 84020

LICENSED ARCHITECT
Lafe Theadore Harris
15 Aug 2024
No. 8878-0301
STATE OF UTAH

THE CHURCH OF JESUS CHRIST OF LATTER-DAY SAINTS

Springwater 9
Vineyard UT Springwater Stake

Approx. 542 South Geneva Road
Vineyard, Utah 84059

BHD #: 2346
County Parcel: 39:228:0001
Plan Series: G300-MH-11
Owner #: 502-2004
Date: 15 Aug 2024

Drawing Issue and Revision Schedule

#	Date	Description

BUILDING SECTIONS

A302

8/15/2024 1:06:29 PM

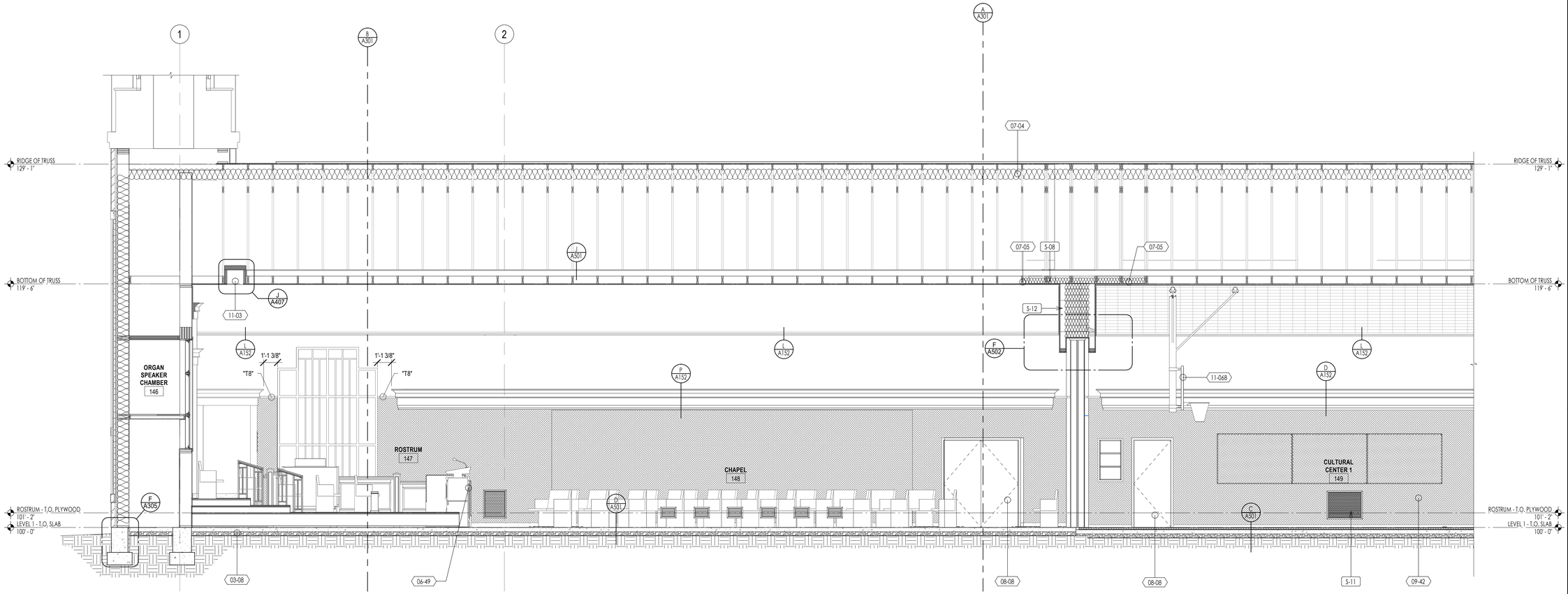

BUILDING SECTION
1/4" = 1'-0"
A303

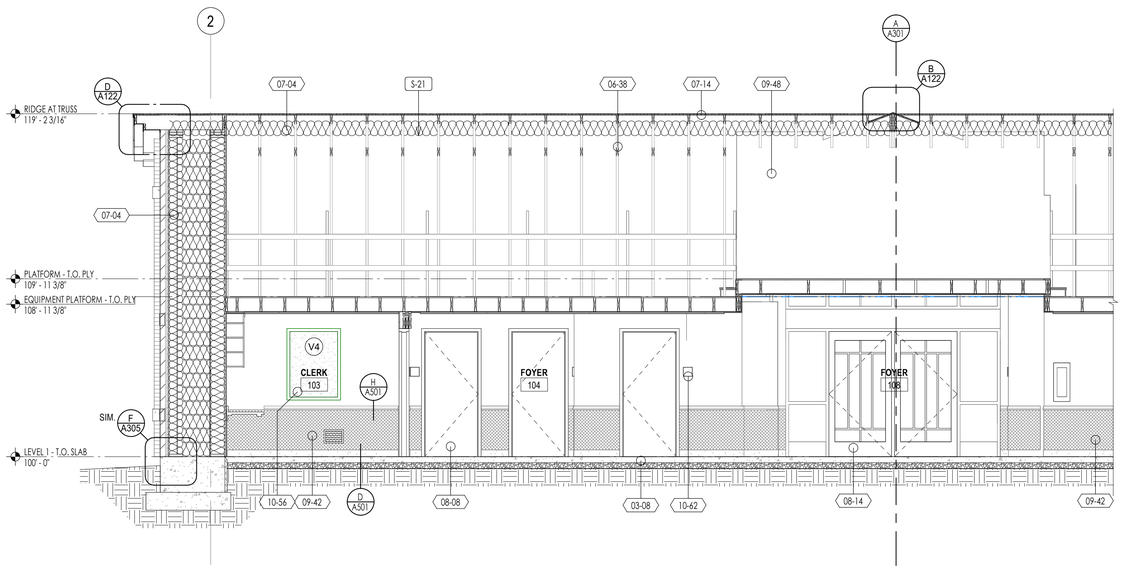

BUILDING SECTION
1/4" = 1'-0"
B
A303

KEYNOTE INSTRUCTION	
INSTRUCTIONAL KEYNOTES	
S-08	FILL FOLDING PARTITION HEADER WITH INSULATION. EXTENT ON BOTH SIDES OF HEADER FOR 4'-0"
S-11	MECHANICAL LOUVER, PAINT WALL BEHIND LOUVER BLACK, TYPICAL
S-12	FILL WITH INSULATION, SEE SPECIFICATIONS
S-21	VAPOR RETARDER/ AIR BARRIER MEMBRANE, STAPLE TO SIDES OF TRUSS. SEAL AIRTIGHT, SEE E/A303

KEYNOTES

XX-XX — KEYNOTE MATERIAL

MATERIAL / SPECIFICATION KEYNOTES

03-08	CAST IN PLACE INTERIOR CONCRETE SLABS, SEE STRUCTURAL DRAWINGS & SPECIFICATIONS
06-38	PRE-ENGINEERED ROOF TRUSSES, SEE STRUCTURAL DRAWINGS
06-49	ROSTRUM CASEWORK, SEE DETAILS & SPECIFICATION
07-04	BLANKET THERMAL INSULATION, SEE SCHEDULE, DETAILS, & SPECIFICATION
07-05	BLANKET SOUND INSULATION
07-14	COMPOSITE ASPHALT SHINGLES, SEE DETAILS & SPECIFICATIONS
08-08	INTERIOR SOLID CORE FLUSH WOOD DOORS, FACTORY FINISHED, SEE SCHEDULE & SPECIFICATION
08-14	EXTERIOR & INTERIOR ALUMINIUM STOREFRONT ENTRANCES, SEE SCHEDULE & SPECIFICATION
09-42	SISAL WALL COVERING AS SELECTED, SEE FINISH SCHEDULE/ SPECIFICATION
09-48	INTERIOR PAINTED GYPSUM BOARD, SEE PAINT SCHEDULE/ SPECIFICATION
10-56	FIXED TACKBOARDS, SEE SPECIFICATION
10-62	ROOM SIGNAGE, SEE DETAILS & SPECIFICATION
11-03	ELECTRICALLY OPERATED PROJECTION SCREEN, SEE DETAILS & SPECIFICATION
11-06B	ELECTRICALLY OPERATED FOLDING BASKETBALL STANDARD, OPTION '2', SEE DETAILS & SPECIFICATIONS

bhd ARCHITECTS
www.bhdarchitects.com
Phone 801.571.0010
Fax 801.571.0303
Toll Free 888.571.0010
65 East Wadsworth Park Drive
Suite 205 Draper, Utah 84020

LICENSED ARCHITECT
Lafe Theadore Harris
15 Aug 2024
#6278-0301
STATE OF UTAH

THE CHURCH OF
JESUS CHRIST
OF LATTER-DAY SAINTS

Springwater 9
Vineyard UT Springwater Stake

Approx. 542 South Geneva Road
Vineyard, Utah 84059

Owner #: 502-2004
Plan Series: G300-MH-11
County Parcel: 39-228-0001
BHD #: 2346
Date: 15 Aug 2024

Drawing Issue and Revision Schedule

#	Date	Description

BUILDING SECTIONS

A303

8/15/2024 1:06:32 PM

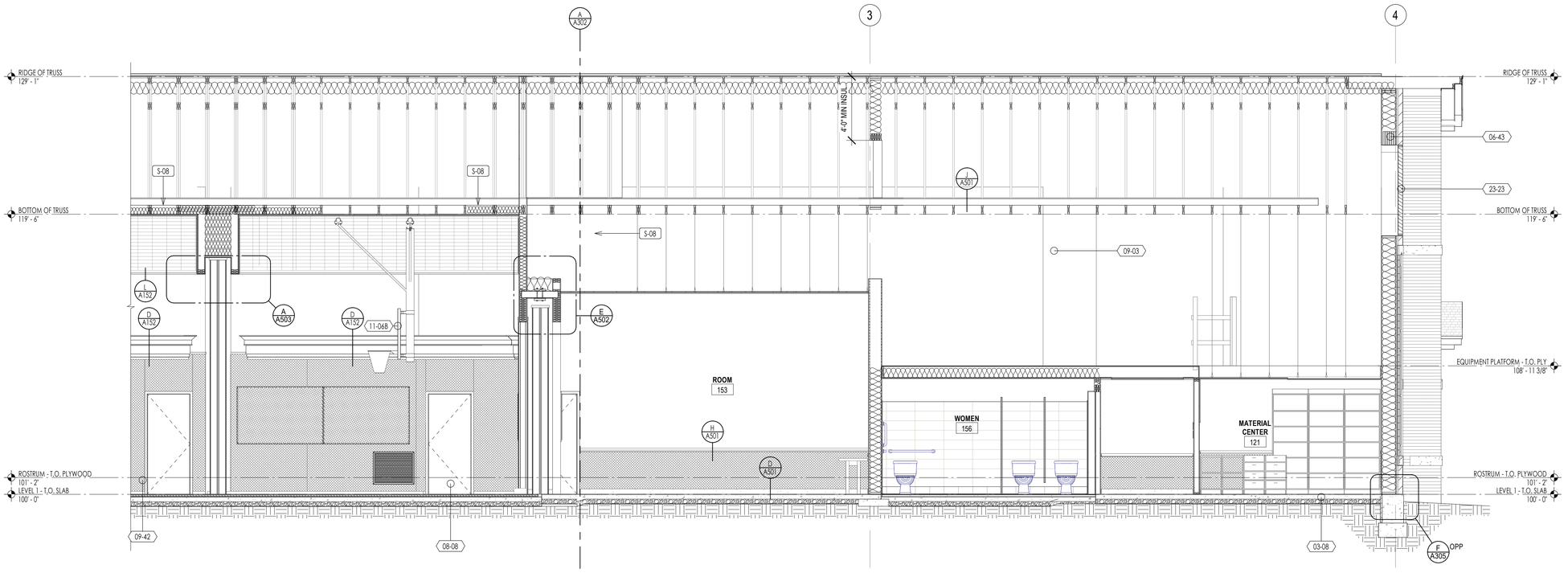

BUILDING SECTION
1/4" = 1'-0"
A304

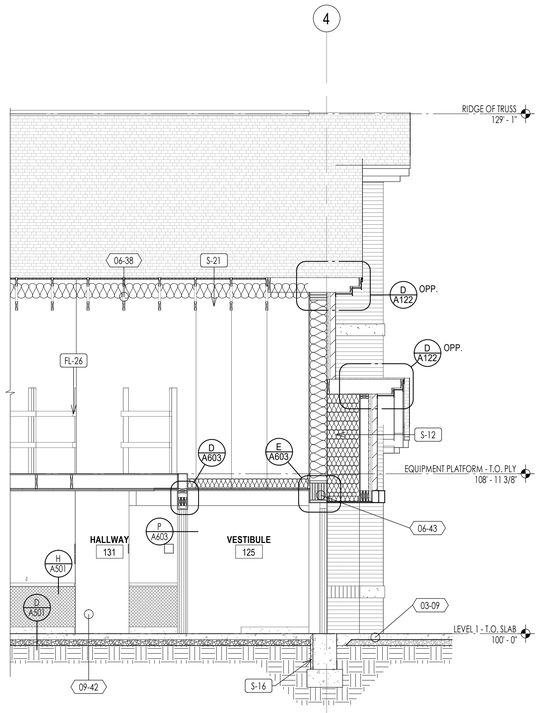

BUILDING SECTION
1/4" = 1'-0"
B
A304

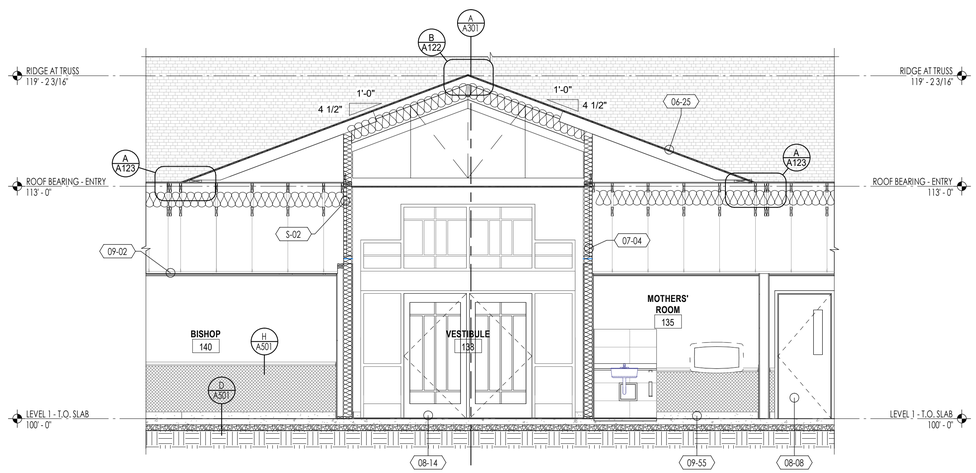

BUILDING SECTION
1/4" = 1'-0"
C
A304

KEYNOTES

XX-XX — KEYNOTE MATERIAL

MATERIAL / SPECIFICATION KEYNOTES

03-08	CAST IN PLACE INTERIOR CONCRETE SLABS, SEE STRUCTURAL DRAWINGS & SPECIFICATIONS
03-09	CAST IN PLACE EXTERIOR CONCRETE SLABS, SEE STRUCTURAL DRAWINGS & SPECIFICATIONS
06-25	ROOF SHEATHING, SEE STRUCTURAL DRAWINGS
06-38	PRE-ENGINEERED ROOF TRUSSES, SEE STRUCTURAL DRAWINGS
06-43	STRUCTURAL LAMINATED VENEER LUMBER BEAM, SEE STRUCTURAL
07-04	BLANKET THERMAL INSULATION, SEE SCHEDULE, DETAILS, & SPECIFICATION
08-08	INTERIOR SOLID CORE FLUSH WOOD DOORS, FACTORY FINISHED, SEE SCHEDULE & SPECIFICATION
08-14	EXTERIOR & INTERIOR ALUMINIUM STOREFRONT ENTRANCES, SEE SCHEDULE & SPECIFICATION
09-02	METAL SUSPENSION SYSTEM W/ GYPSUM BOARD, SEE DETAILS AND SPECIFICATION
09-03	5/8" GYPSUM BOARD, DETAILS & SPECIFICATION
09-42	SISAL WALL COVERING AS SELECTED, SEE FINISH SCHEDULE/ SPECIFICATION
09-55	CARPET BASE, SEE FINISH SCHEDULE/ SPECIFICATION
11-06B	ELECTRICALLY OPERATED FOLDING BASKETBALL STANDARD, OPTION '2', SEE DETAILS & SPECIFICATIONS
23-23	HVAC LOUVER, SEE MECHANICAL DRAWINGS & SPECIFICATION

FP-XX — KEYNOTE INSTRUCTION

INSTRUCTIONAL KEYNOTES

FL-26	INSTALL SAFETY GUARDRAIL & HANDRAIL IN LOFT EXCEPT WHERE PROTECTED BY MECH. DUCTWORK. SEE DETAILS
S-02	CONTRACTOR SHALL EXTEND WALL FRAMING, AND INSULATION TO UNDERSIDE OF ROOF DECK. GYPSUM BOARD TO EXTEND TO CEILING ONLY
S-08	FILL FOLDING PARTITION HEADER WITH INSULATION. EXTENT ON BOTH SIDES OF HEADER FOR 4'-0"
S-12	FILL WITH INSULATION, SEE SPECIFICATIONS
S-16	3" RIGID INSULATION AT INTERIOR FACE OF CONCRETE FROM TOP OF SLAB TO TOP OF FOOTING
S-21	VAPOR RETARDER/ AIR BARRIER MEMBRANE, STAPLE TO SIDES OF TRUSS. SEAL AIRTIGHT, SEE E/A303

bhd ARCHITECTS
www.bhdarchitects.com
Phone 801.571.0010
Fax 801.571.0303
Toll Free 888.571.0010
65 East Wadsworth Park Drive
Suite 205 Draper, Utah 84020

LICENSED ARCHITECT
Lafe Theadore Harris
15 Aug 2024
6278878-0301
STATE OF UTAH

THE CHURCH OF JESUS CHRIST OF LATTER-DAY SAINTS

Springwater 9
Vineyard UT Springwater Stake

Approx. 542 South Geneva Road
Vineyard, Utah 84059

Owner #: 502-2004
Plan Series: G300-MH-11
County Parcel: 39-228:0001
BHD #: 2346
Date: 15 Aug 2024

Drawing Issue and Revision Schedule

#	Date	Description

BUILDING SECTION

A304

8/15/2024 1:04:35 PM

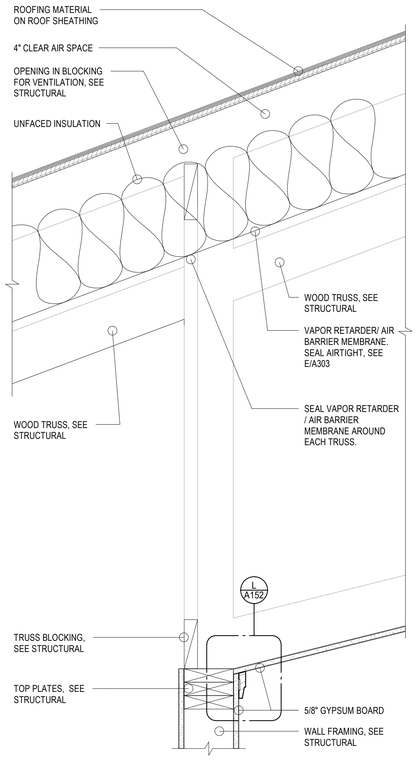

ROOF DETAIL — A / A305
1 1/2" = 1'-0"

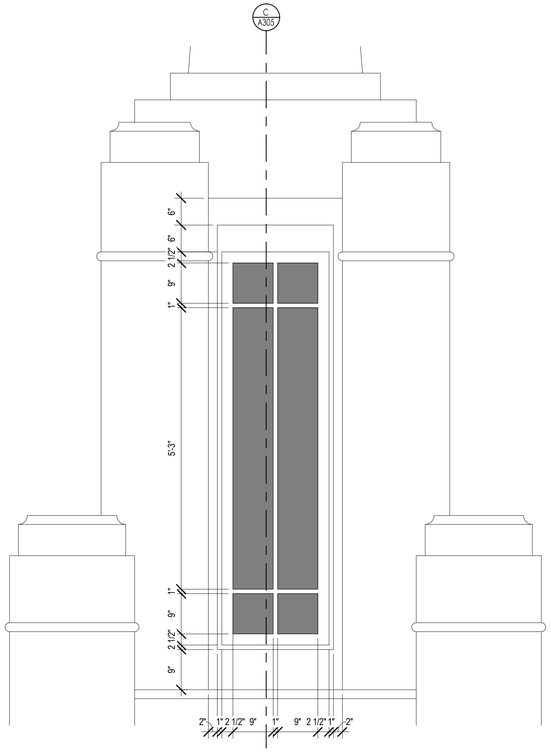

WINDOW DETAIL — B / A305
3/4" = 1'-0"

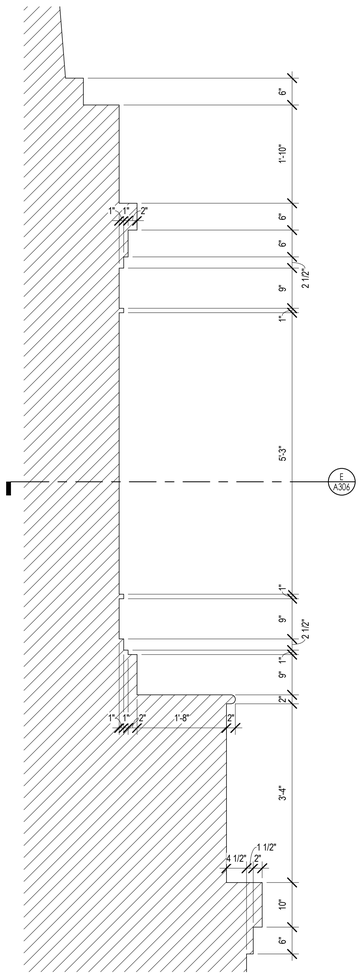

ENLARGED STEEPLE WINDOW SECTION — C / A305
3/4" = 1'-0"

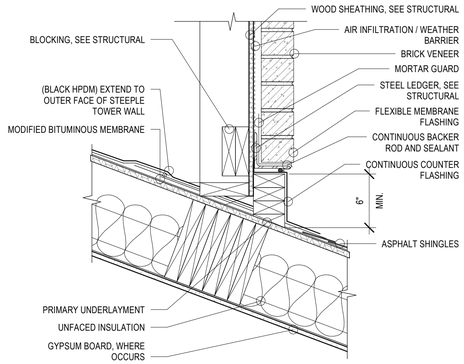

ENLARGED STEEPLE DETAIL — D / A305
1 1/2" = 1'-0"

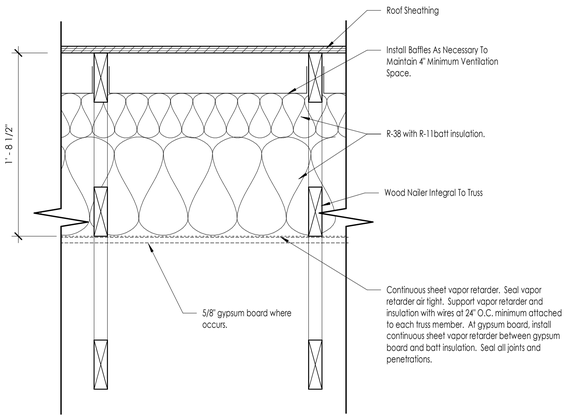

INSULATION / VAPOR RETARDER — E / A305
1 1/2" = 1'-0"

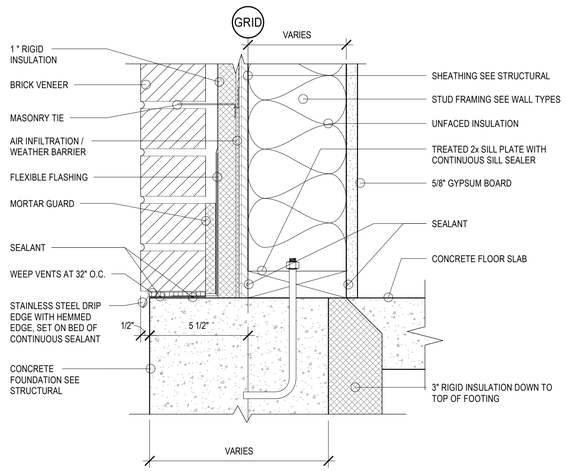

EXTERIOR WALL BASE DETAIL (TYP.) — F / A305
3" = 1'-0"

bhd ARCHITECTS
www.bhdarchitects.com
Phone 801.571.0010
Fax 801.571.0303
Toll Free 888.571.0010
65 East Wadsworth Park Drive
Suite 205 Draper, Utah 84020

LICENSED ARCHITECT
Lafe Theadore Harris
15 Aug 2024
No. 8878-0301
STATE OF UTAH

THE CHURCH OF JESUS CHRIST OF LATTER-DAY SAINTS

Springwater 9
Vineyard UT Springwater Stake
Approx. 542 South Geneva Road
Vineyard, Utah 84059

Owner #: 502-2004
Plan Series: G300-MH-11
County Parcel: 39-228-0001
BHD #: 2346
Date: 15 Aug 2024

Drawing Issue and Revision Schedule

#	Date	Description

DETAILS

A305

8/15/2024 1:04:35 PM

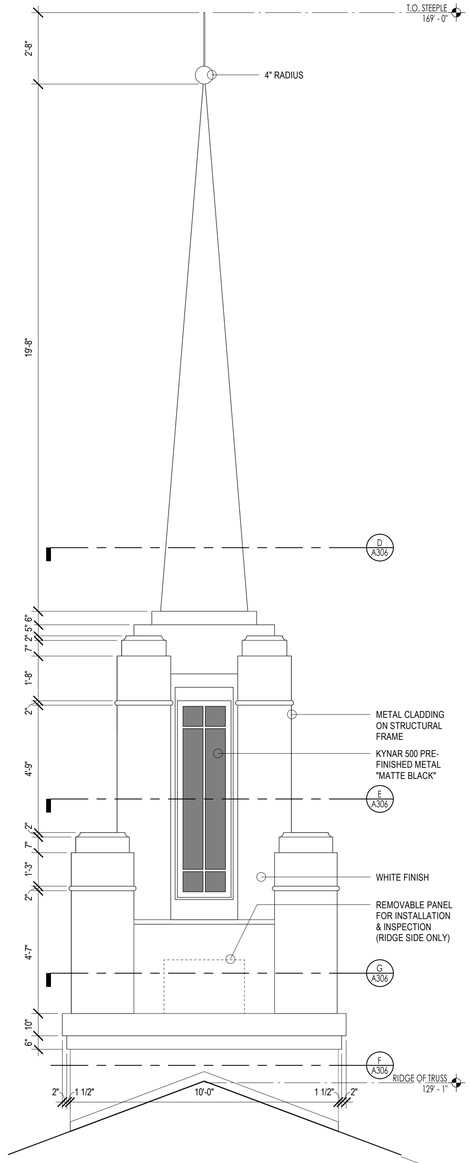

STEEPLE ELEVATION

3/8" = 1'-0"

A306

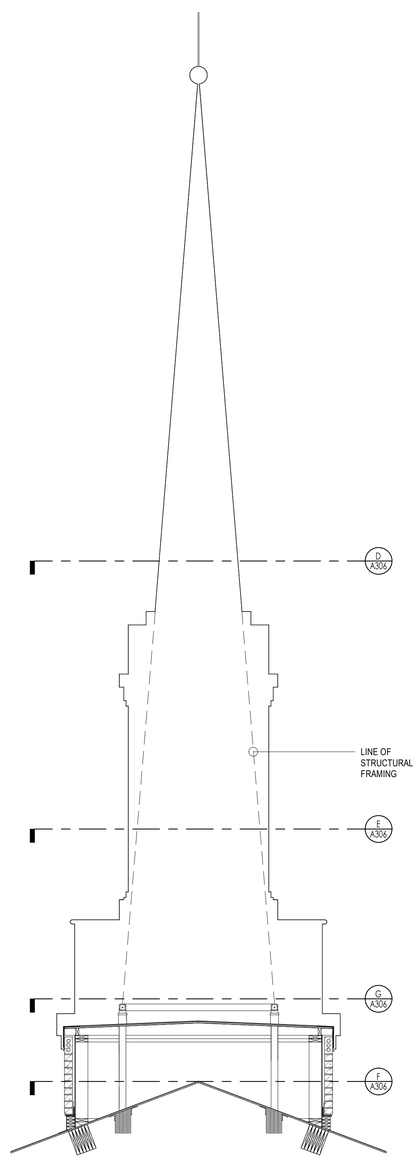

STEEPLE SECTION

3/8" = 1'-0"

B
A306

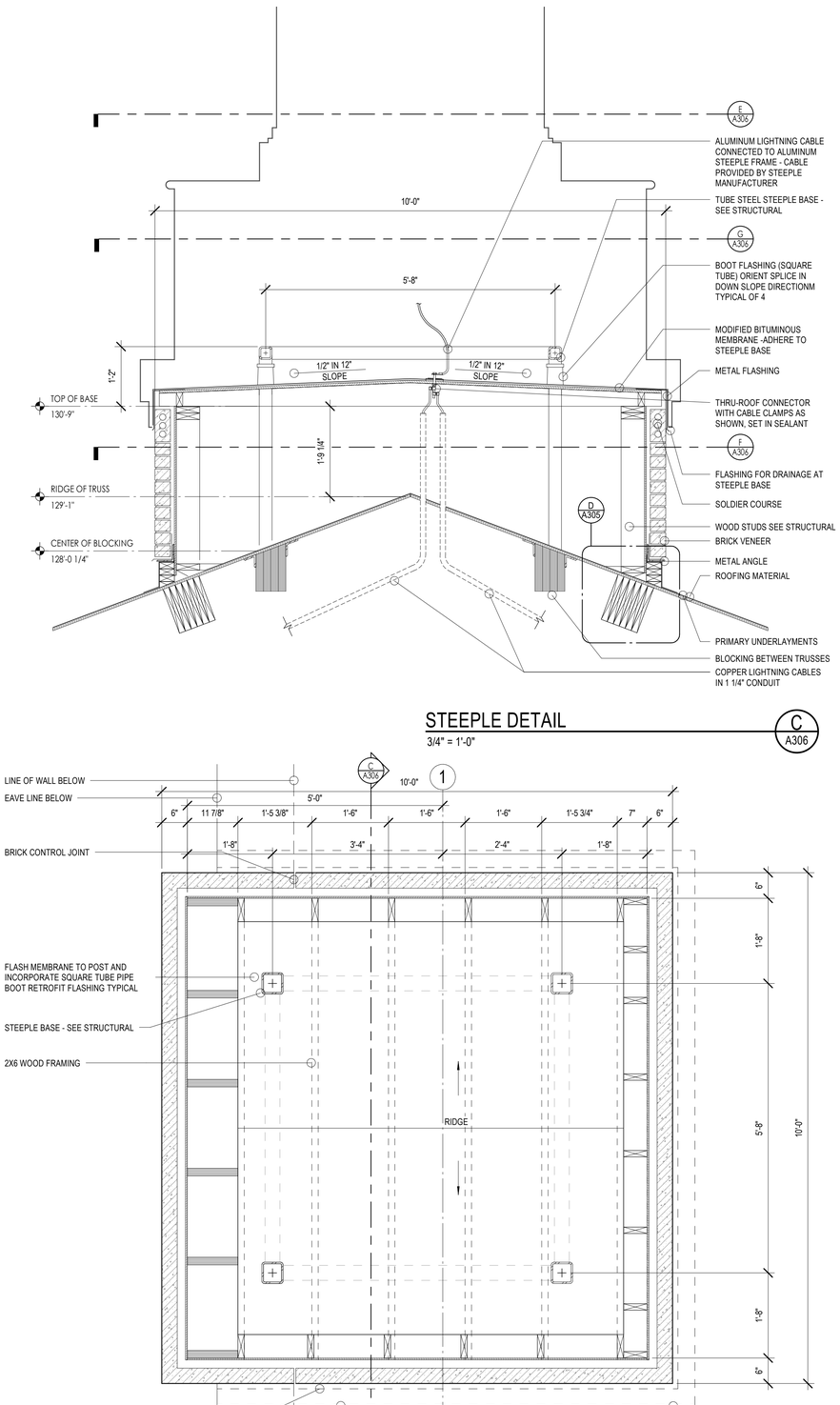

STEEPLE DETAIL

3/4" = 1'-0"

C
A306

NOTE:
STEEPLE DIMENSIONS ARE SYMETRICAL ABOUT CENTERLINES

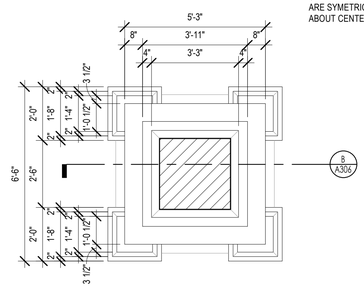

STEEPLE PLAN

3/8" = 1'-0"

D
A306

NOTE:
STEEPLE DIMENSIONS ARE SYMETRICAL ABOUT CENTERLINES

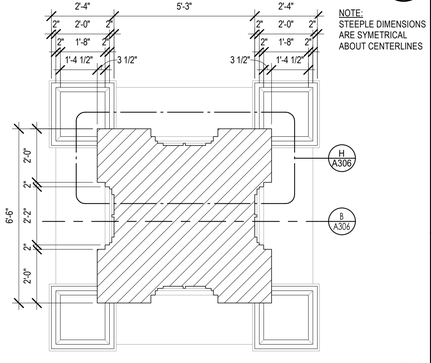

STEEPLE PLAN

3/8" = 1'-0"

E
A306

STEEPLE BASE FRAMING

3/4" = 1'-0"

F
A306

NOTE:
STEEPLE DIMENSIONS ARE SYMMETRICAL ABOUT CENTERLINES

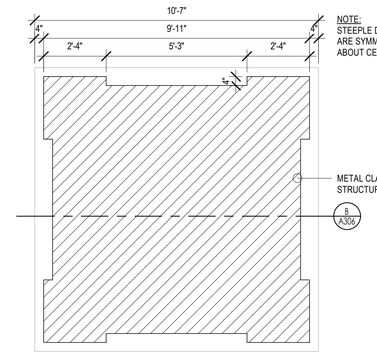

STEEPLE PLAN

3/8" = 1'-0"

G
A306

NOTE:
NUMBER AND PLACEMENT OF MUNTINS IN WINDOW ELEMENT MAY VARY DEPENDING ON STYLE OPTION SELECTED

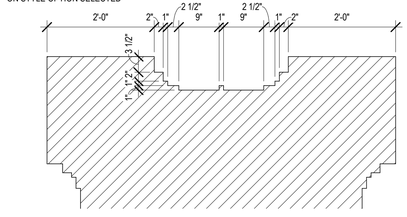

STEEPLE PLAN

3/4" = 1'-0"

H
A306

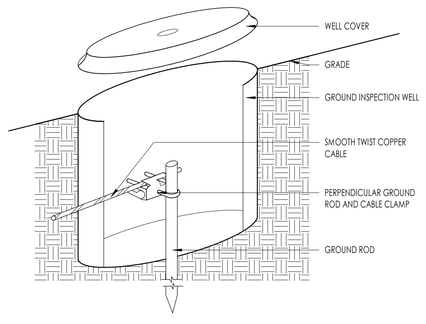

GROUND INSPECTION WELL

NTS

J
A306

ALL BARE CONDUCTORS IN CONTACT WITH FLAMMABLE MATERIALS SHALL BE INSTALLED IN CONDUIT.

REFER TO THE SPECIFICATIONS FOR ADDITONAL INFORMATION AND REQUIREMENTS.

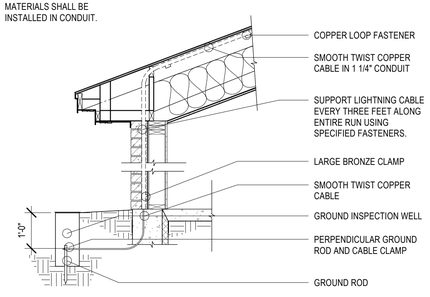

CABLE INSTALLATION DETAIL

1/2" = 1'-0"

K
A306

bhd ARCHITECTS
www.bhdarchitects.com
Phone 801.571.0010
Fax 801.571.0303
Toll Free 888.571.0010
65 East Wadsworth Park Drive
Suite 205 Draper, Utah 84020

LICENSED ARCHITECT
Lafe Theadore Harris
15 Aug 2024
No. 8878-0301
STATE OF UTAH

THE CHURCH OF JESUS CHRIST OF LATTER-DAY SAINTS

Springwater 9
Vineyard UT Springwater Stake

Approx. 542 South Geneva Road
Vineyard, Utah 84059

Owner #:	502-2004
Plan Series:	G300-MH-11
County Parcel:	39-228:0001
BHD #:	2346
Date:	15 Aug 2024

Drawing Issue and Revision Schedule

#	Date	Description

STEEPLE PLANS, ELEVATIONS, SECTIONS AND DETAILS

A306

8/15/2024 1:06:37 PM

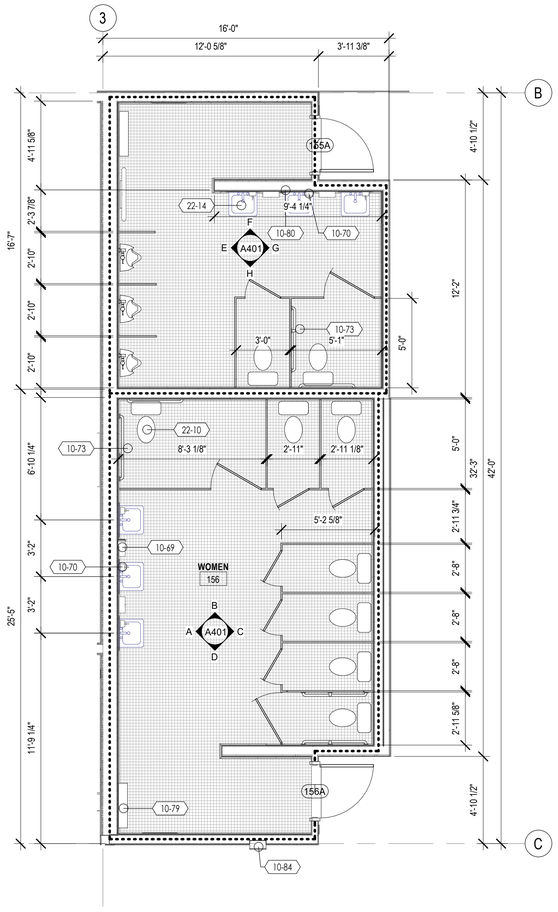

ENLARGED RESTROOM PLANS
1/4" = 1'-0" — 1 A401

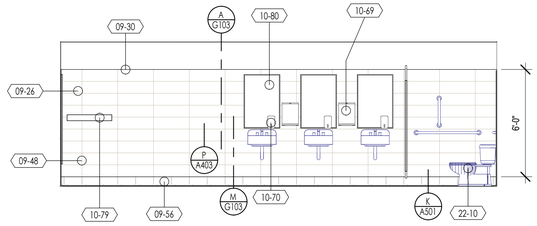

ELEVATION
1/4" = 1'-0" — A A401

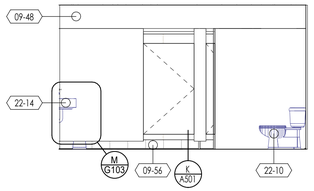

ELEVATION
1/4" = 1'-0" — B A401

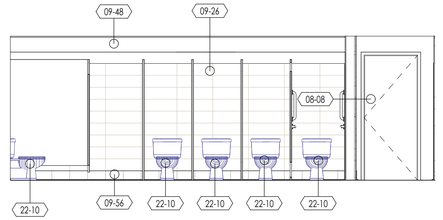

ELEVATION
1/4" = 1'-0" — C A401

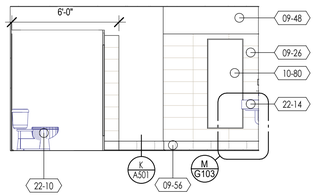

ELEVATION
1/4" = 1'-0" — D A401

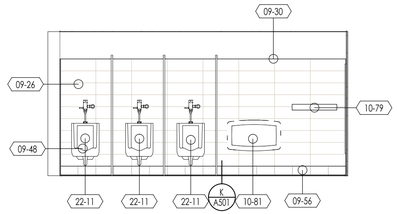

ELEVATION
1/4" = 1'-0" — E A401

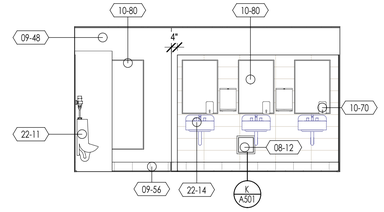

ELEVATION
1/4" = 1'-0" — F A401

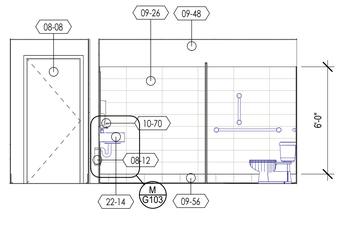

ELEVATION
1/4" = 1'-0" — G A401

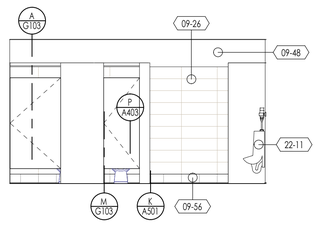

ELEVATION
1/4" = 1'-0" — H A401

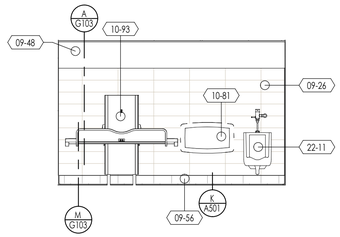

ELEVATION
1/4" = 1'-0" — J A401

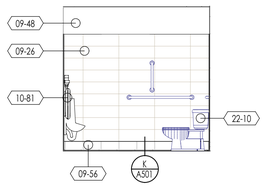

ELEVATION
1/4" = 1'-0" — K A401

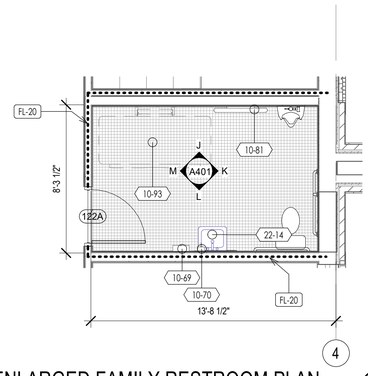

ENLARGED FAMILY RESTROOM PLAN
1/4" = 1'-0" — 2 A401

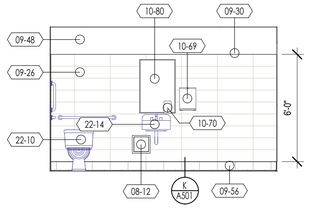

ELEVATION
1/4" = 1'-0" — L A401

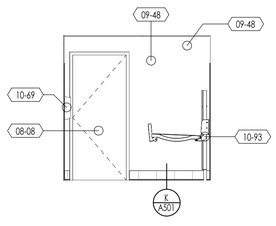

ELEVATION
NTS — M A401

GENERAL NOTES

IN ACCESSIBLE STALLS, PROVIDE A PULL OR GRASP NEAR THE LATCH ON BOTH SIDES OF EACH TOILET COMPARTMENT DOOR.

KEYNOTES

XX-XX — KEYNOTE MATERIAL

MATERIAL / SPECIFICATION KEYNOTES

08-08	INTERIOR SOLID CORE FLUSH WOOD DOORS, FACTORY FINISHED, SEE SCHEDULE & SPECIFICATION
08-12	WALL ACCESS DOORS & FRAMES
09-26	CERAMIC GLAZED WALL TILE SEE FINISH SCHEDULE, DETAILS & SPECIFICATION
09-30	TILE METAL EDGE STRIPS SEE DETAILS & SPECIFICATION
09-48	INTERIOR PAINTED GYPSUM BOARD, SEE PAINT SCHEDULE/ SPECIFICATION
09-56	COVED TILE BASE, SEE DETAILS & SPECIFICATION
10-69	PAPER TOWEL (ROLL) DISPENSER
10-70	LIQUID-SOAP DISPENSER
10-73	GRAB BAR
10-79	UTILITY SHELF
10-80	MIRROR WITH METAL FRAME
10-81	BABY CHANGING STATION, SEE SPECIFICATION
10-84	FIRE PROTECTION CABINET, SEE SPECIFICATION
10-93	POTENTIAL FUTURE ADULT CHANGING STATION NOT INSTALLED, PROVIDE STRUCTURAL BLOCKING AND POWER, SEE SPECIFICATION
22-10	COMMERCIAL WATER CLOSET, SEE PLUMBING DRAWINGS & SPECIFICATION
22-11	COMMERCIAL URINAL, SEE PLUMBING DRAWINGS & SPECIFICATION
22-14	COMMERCIAL LAVATORY/SINK FAUCET, SEE PLUMBING DRAWINGS & SPECIFICATION

FP-XX — KEYNOTE INSTRUCTION

INSTRUCTIONAL KEYNOTES

FL-20	PROVIDE SOLID BLOCKING IN THE WALLS AT ALL DOOR STOPS, VISUAL DESPLAY BOARDS, TOILET COMPARTMENTS, LAVATORY SUPPORTS, WALL HUNG CABINETS, AND ALL OTHER EQUIPMENT & ACCESSORY LOCAITONS AS PER STRUCT. BLOCKING SCHEDULE

bhd ARCHITECTS
www.bhdarchitects.com
Phone 801.571.0010
Fax 801.571.0303
Toll Free 888.571.0010
65 East Wadsworth Park Drive
Suite 205 Draper, Utah 84020

LICENSED ARCHITECT — Lafe Theadore Harris — 15 Aug 2024 — 7882878-0301 — STATE OF UTAH

THE CHURCH OF JESUS CHRIST OF LATTER-DAY SAINTS

Springwater 9
Vineyard UT Springwater Stake
Approx. 542 South Geneva Road
Vineyard, Utah 84059

BHD #: 2346
County Parcel: 39-228:0001
Plan Series: G300-MH-11
Owner #: 502-2004
Date: 15 Aug 2024

Drawing Issue and Revision Schedule

#	Date	Description

ENLARGED RESTROOM PLAN AND ELEVATIONS

A401

8/15/2024 1:06:42 PM

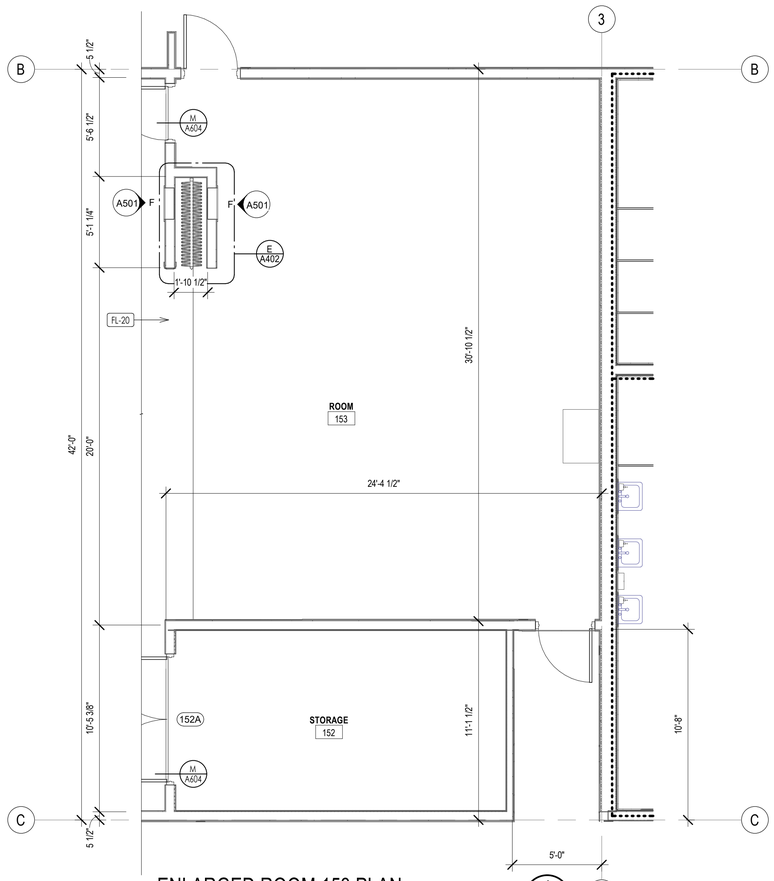

ENLARGED ROOM 153 PLAN

1/4" = 1'-0"

1 A402

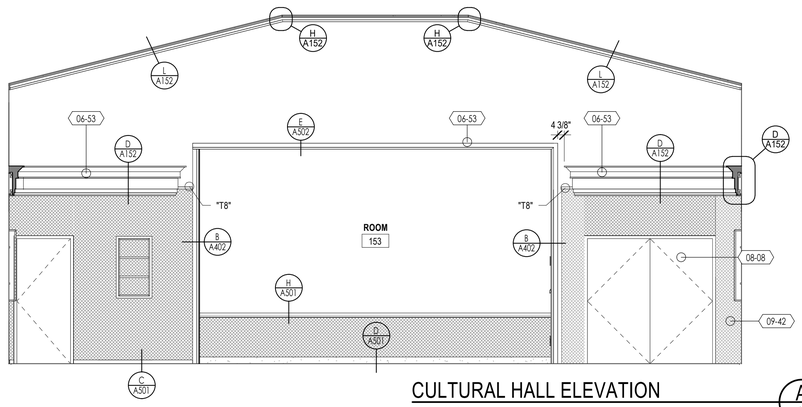

CULTURAL HALL ELEVATION

1/4" = 1'-0"

A A402

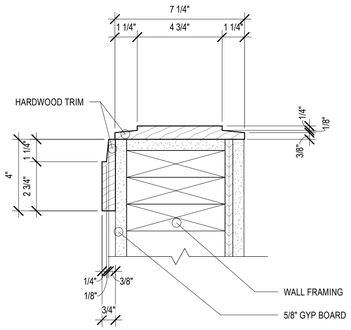

DETAIL

3" = 1'-0"

B A402

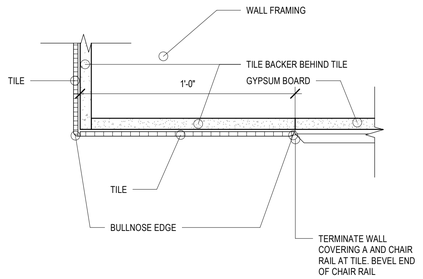

CORNER WALL TILE

3" = 1'-0"

C A402

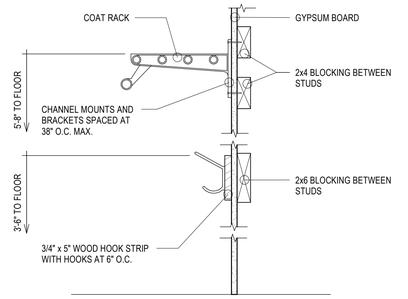

COAT RACK DETAIL

1 1/2" = 1'-0"

D A402

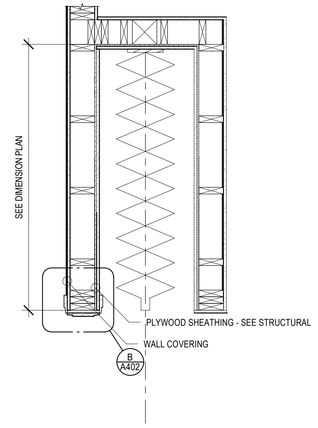

DETAIL

3/4" = 1'-0"

E A402

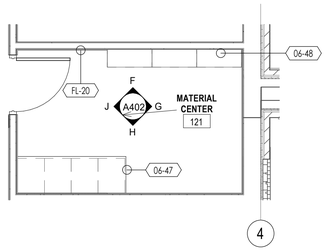

4

ENLARGED MATERIAL CENTER

1/4" = 1'-0"

2 A402

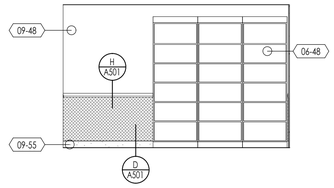

MATERIALS CENTER ELEVATION A

1/4" = 1'-0"

F A402

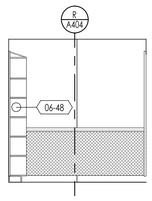

MATERIALS CENTER ELEVATION B

1/4" = 1'-0"

G A402

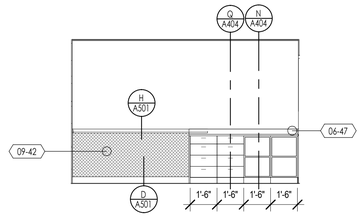

MATERIALS CENTER ELEVATION C

1/4" = 1'-0"

H A402

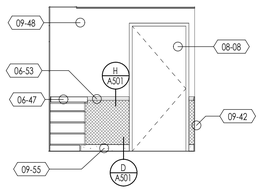

MATERIALS CENTER ELEVATION D

1/4" = 1'-0"

J A402

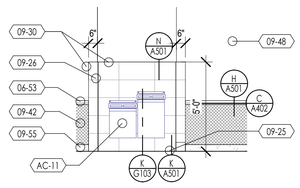

DRINKING FOUNTAIN

1/4" = 1'-0"

K A402

KEYNOTES

XX-XX — KEYNOTE MATERIAL

MATERIAL / SPECIFICATION KEYNOTES

06-47	PLASTIC LAMINATE, SEE DETAILS & SPECIFICATION
06-48	WOOD VENEER FACED ARCHITECTURAL CABINETS, SEE DETAILS & SPECIFICATION
06-53	HARDWOOD TRIM, SEE DETAILS & SPECIFICATION
08-08	INTERIOR SOLID CORE FLUSH WOOD DOORS, FACTORY FINISHED, SEE SCHEDULE & SPECIFICATION
09-25	CERAMIC GLAZED FLOOR TILE, AS SELECTED. SEE SCHEDULE, DETAILS & SPECIFICATION
09-26	CERAMIC GLAZED WALL TILE SEE FINISH SCHEDULE, DETAILS & SPECIFICATION
09-30	TILE METAL EDGE STRIPS SEE DETAILS & SPECIFICATION
09-42	SISAL WALL COVERING AS SELECTED, SEE FINISH SCHEDULE/ SPECIFICATION
09-48	INTERIOR PAINTED GYPSUM BOARD, SEE PAINT SCHEDULE/ SPECIFICATION
09-55	CARPET BASE, SEE FINISH SCHEDULE/ SPECIFICATION

FP-XX — KEYNOTE INSTRUCTION

INSTRUCTIONAL KEYNOTES

AC-11	DRINKING FOUNTAIN, A.N.S.I. A117.1-2017.
FL-20	PROVIDE SOLID BLOCKING IN THE WALLS AT ALL DOOR STOPS, VISUAL DESPLAY BOARDS, TOILET COMPARTMENTS, LAVATORY SUPPORTS, WALL HUNG CABINETS, AND ALL OTHER EQUIPMENT & ACCESSORY LOCAITONS AS PER STRUCT. BLOCKING SCHEDULE

GENERAL NOTES

1. HARDWOOD TRIM DESIGNATIONS (* T# *) REFER TO A/A408.
2. FOLDING PARTITION MUST MEET AT CENTER OF PROSCENIUM OPENING.

bhd ARCHITECTS
www.bhdarchitects.com
Phone 801.571.0010
Fax 801.571.0303
Toll Free 888.571.0010
65 East Wadsworth Park Drive
Suite 205 Draper, Utah 84020

LICENSED ARCHITECT — Lafe Meadore Harris — 15 Aug 2024 — 7878-0301 — STATE OF UTAH

THE CHURCH OF JESUS CHRIST OF LATTER-DAY SAINTS

Springwater 9
Vineyard UT Springwater Stake

Approx. 542 South Geneva Road
Vineyard, Utah 84059

Owner #: 502-2004
Plan Series: G300-MH-11
County Parcel: 39-228:0001
BHD #: 2346
Date: 15 Aug 2024

Drawing Issue and Revision Schedule

#	Date	Description

ENLARGED ROOM 153 PLAN AND DETAILS

A402

8/15/2024 1:06:45 PM

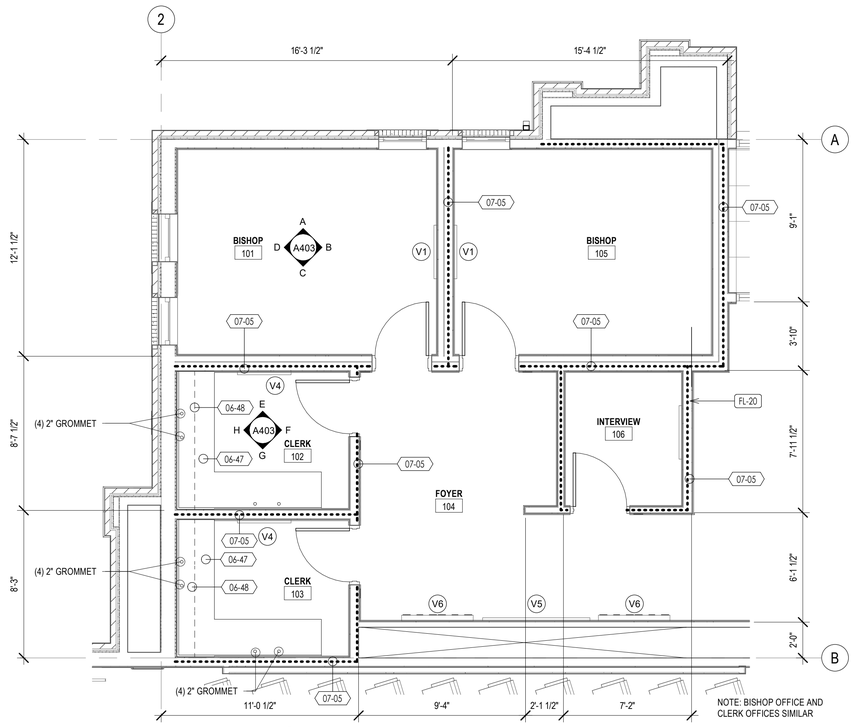

ENLARGED BISHOP AND CLERK ROOMS
1/4" = 1'-0"
1 A403

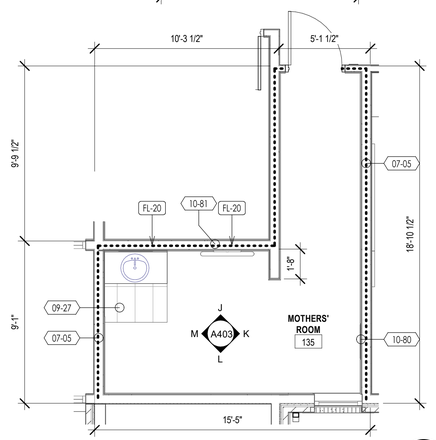

ENLARGED PLAN
1/4" = 1'-0"
2 A403

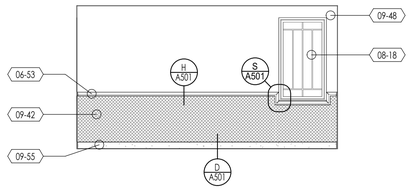

ELEVATION
1/4" = 1'-0"
A A403

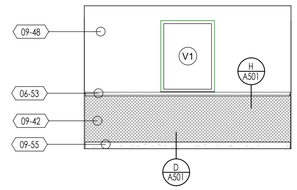

ELEVATION
1/4" = 1'-0"
B A403

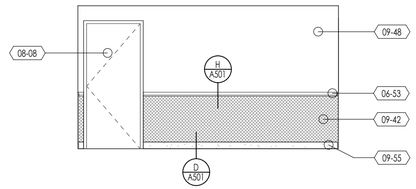

ELEVATION
1/4" = 1'-0"
C A403

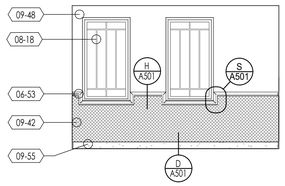

ELEVATION
1/4" = 1'-0"
D A403

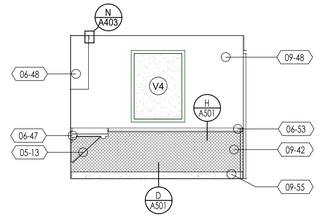

ELEVATION
1/4" = 1'-0"
E A403

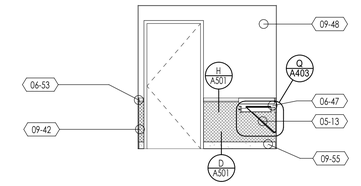

ELEVATION
1/4" = 1'-0"
F A403

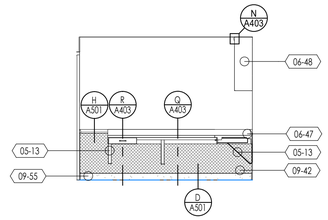

ELEVATION
1/4" = 1'-0"
G A403

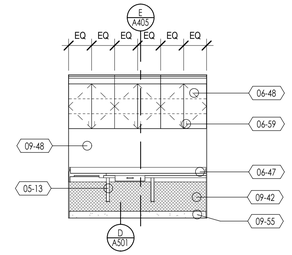

ELEVATION
1/4" = 1'-0"
H A403

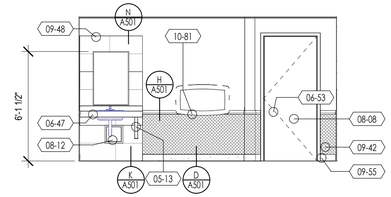

ELEVATION
1/4" = 1'-0"
J A403

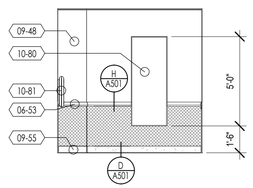

ELEVATION
1/4" = 1'-0"
K A403

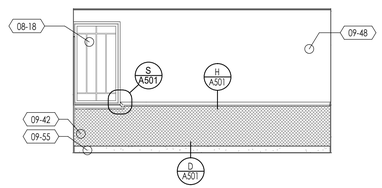

ELEVATION
1/4" = 1'-0"
L A403

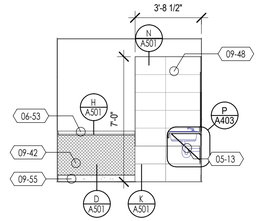

ELEVATION
1/4" = 1'-0"
M A403

KEYNOTES

XX-XX — KEYNOTE MATERIAL

MATERIAL / SPECIFICATION KEYNOTES

05-13	METAL BRACKETS, SEE DETAILS & SPECIFICATIONS
06-47	PLASTIC LAMINATE, SEE DETAILS & SPECIFICATION
06-48	WOOD VENEER FACED ARCHITECTURAL CABINETS, SEE DETAILS & SPECIFICATION
06-53	HARDWOOD TRIM, SEE DETAILS & SPECIFICATION
06-59	CABINET LOCK, SEE SPECIFICATION
07-05	BLANKET SOUND INSULATION
08-08	INTERIOR SOLID CORE FLUSH WOOD DOORS, FACTORY FINISHED, SEE SCHEDULE & SPECIFICATION
08-12	WALL ACCESS DOORS & FRAMES
08-18	VINYL FRAMED FIXED WINDOWS, SEE SCHEDULE, DETAILS & SPECIFICATIONS
09-27	QUARRY FLOOR TILE, AS SELECTED. SEE FINISH SCHEDULE, DETAILS & SPECIFICATION
09-42	SISAL WALL COVERING AS SELECTED, SEE FINISH SCHEDULE/ SPECIFICATION
09-48	INTERIOR PAINTED GYPSUM BOARD, SEE PAINT SCHEDULE/ SPECIFICATION
09-55	CARPET BASE, SEE FINISH SCHEDULE/ SPECIFICATION
10-80	MIRROR WITH METAL FRAME
10-81	BABY CHANGING STATION, SEE SPECIFICATION

FP-XX — KEYNOTE INSTRUCTION

INSTRUCTIONAL KEYNOTES

FL-20	PROVIDE SOLID BLOCKING IN THE WALLS AT ALL DOOR STOPS, VISUAL DESPLAY BOARDS, TOILET COMPARTMENTS, LAVATORY SUPPORTS, WALL HUNG CABINETS, AND ALL OTHER EQUIPMENT & ACCESSORY LOCAITONS AS PER STRUCT. BLOCKING SCHEDULE

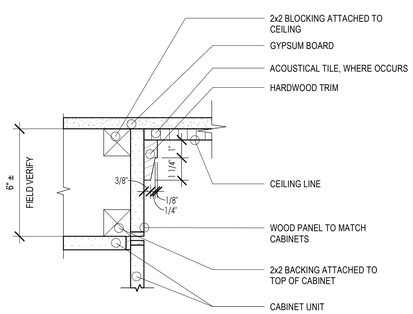

SOFFIT DETAIL
3" = 1'-0"
N A403

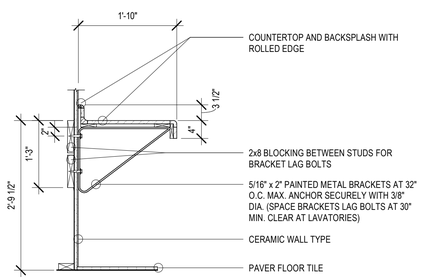

SECTION
3/4" = 1'-0"
P A403

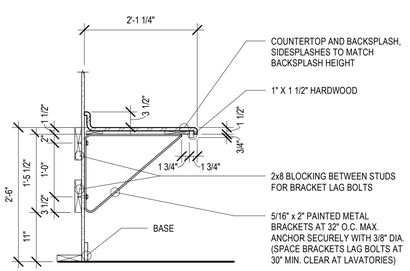

SECTION
3/4" = 1'-0"
Q A403

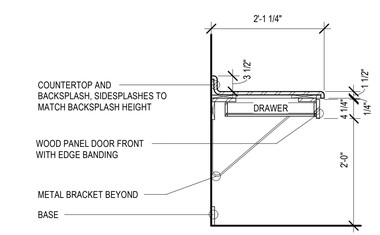

SECTION
3/4" = 1'-0"
R A403

bhd ARCHITECTS
www.bhdarchitects.com
Phone 801.571.0010
Fax 801.571.0303
Toll Free 888.571.0010
65 East Wadsworth Park Drive
Suite 205 Draper, Utah 84020

LICENSED ARCHITECT
Lafe Theodore Harris
15 Aug 2024
6738598-0301
STATE OF UTAH

THE CHURCH OF JESUS CHRIST OF LATTER-DAY SAINTS

Springwater 9
Vineyard UT Springwater Stake
Approx. 542 South Geneva Road
Vineyard, Utah 84059

Owner #: 502-2004
Plan Series: G300-MH-11
County Parcel: 39-228:0001
BHD #: 2346
Date: 15 Aug 2024

Drawing Issue and Revision Schedule

#	Date	Description

ENLARGED BISHOP, CLERK, AND MOTHER'S ROOM

A403

8/15/2024 1:58:14 PM

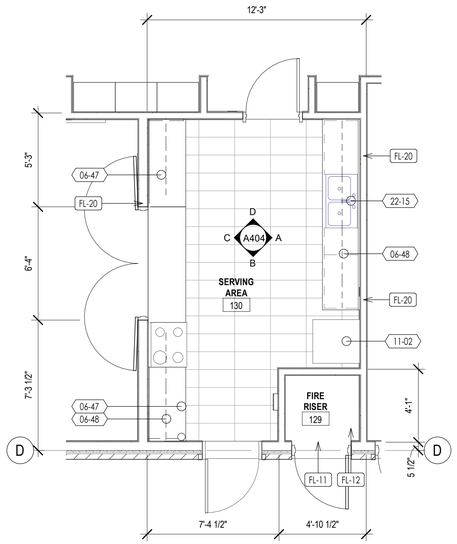

ENLARGED SERVING AREA
1/4" = 1'-0"
1 / A404

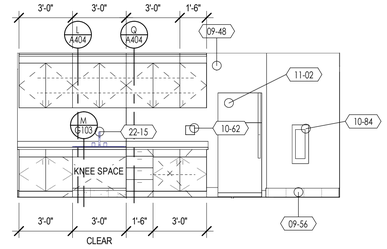

ELEVATION
1/4" = 1'-0"
A / A404

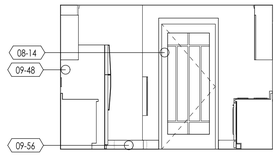

ELEVATION
1/4" = 1'-0"
B / A404

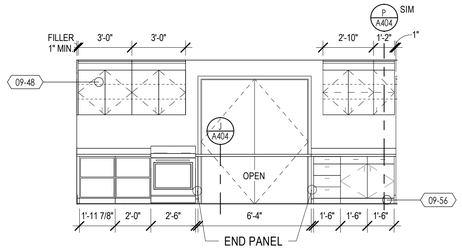

ELEVATION
1/4" = 1'-0"
C / A404

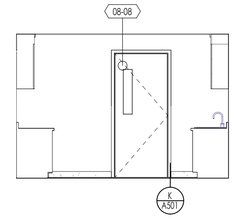

ELEVATION
1/4" = 1'-0"
D / A404

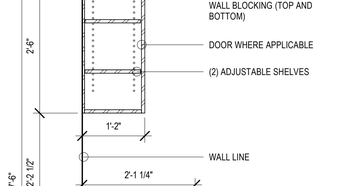

ELEVATION
1/4" = 1'-0"
E / A404

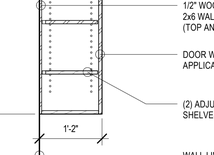

ELEVATION
1/4" = 1'-0"
F / A404

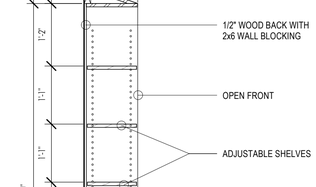

ELEVATION
1/4" = 1'-0"
G / A404



ELEVATION
1/4" = 1'-0"
H / A404

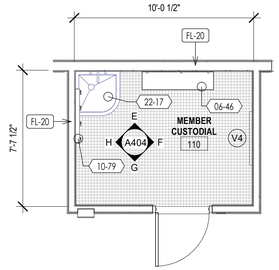

ENLARGED MEMBER CUSTODIAL
1/4" = 1'-0"
2 / A404

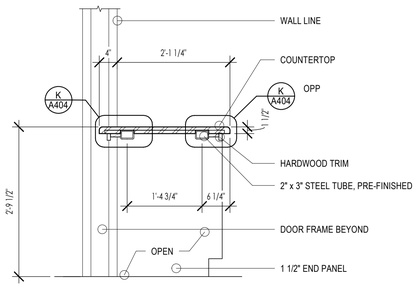

SECTION
3/4" = 1'-0"
J / A404

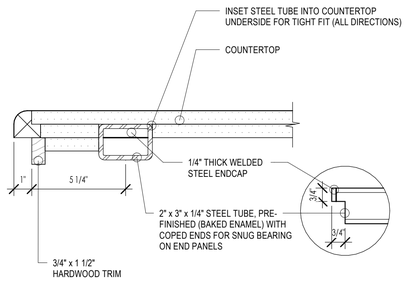

COUNTERTOP SUPPORT
3" = 1'-0"
K / A404

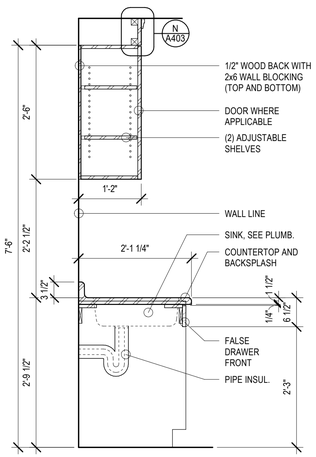

SECTION
3/4" = 1'-0"
L / A404

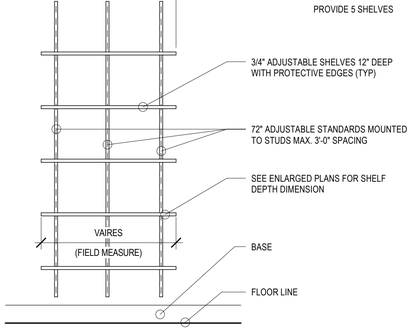

SECTION
3/4" = 1'-0"
M / A404

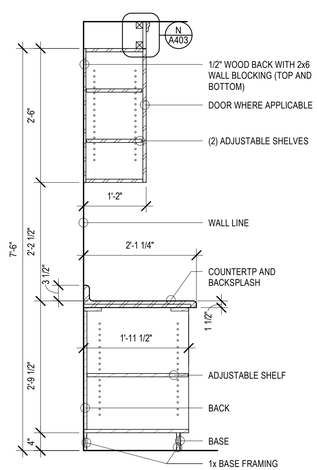

SECTION
3/4" = 1'-0"
N / A404

SECTION
3/4" = 1'-0"
P / A404

SECTION
3/4" = 1'-0"
Q / A404

SECTION
3/4" = 1'-0"
R / A404

KEYNOTES

XX-XX — KEYNOTE MATERIAL

MATERIAL / SPECIFICATION KEYNOTES

06-46	SHELVING, SEE DETAILS
06-47	PLASTIC LAMINATE, SEE DETAILS & SPECIFICATION
06-48	WOOD VENEER FACED ARCHITECTURAL CABINETS, SEE DETAILS & SPECIFICATION
08-08	INTERIOR SOLID CORE FLUSH WOOD DOORS, FACTORY FINISHED, SEE SCHEDULE & SPECIFICATION
08-14	EXTERIOR & INTERIOR ALUMINIUM STOREFRONT ENTRANCES, SEE SCHEDULE & SPECIFICATION
09-26	CERAMIC GLAZED WALL TILE SEE FINISH SCHEDULE, DETAILS & SPECIFICATION
09-27	QUARRY FLOOR TILE, AS SELECTED. SEE FINISH SCHEDULE, DETAILS & SPECIFICATION
09-48	INTERIOR PAINTED GYPSUM BOARD, SEE PAINT SCHEDULE/ SPECIFICATION
09-56	COVED TILE BASE, SEE DETAILS & SPECIFICATION
10-62	ROOM SIGNAGE, SEE DETAILS & SPECIFICATION
10-79	UTILITY SHELF
10-84	FIRE PROTECTION CABINET, SEE SPECIFICATION
10-90	UTILITY SHELF/ MOP HOLDER
11-02	REFRIGERATOR/FREEZER AS SELECTED, SEE SPECIFICATION
22-14	COMMERCIAL LAVATORY/SINK FAUCET, SEE PLUMBING DRAWINGS & SPECIFICATION
22-15	COMMERCIAL STAINLESS TWO BASIN KITCHEN SINK, SEE PLUMBING DRAWINGS & SPECIFICATION
22-17	SERVICE SINK, SEE PLUMBING DRAWINGS & SPECIFICATION

FP-XX — KEYNOTE INSTRUCTION

INSTRUCTIONAL KEYNOTES

FL-11	PRV STATION, SEE FIRE SPRINKLER DRAWINGS
FL-12	FIRE RISER, SEE FIRE SPRINKLER DRAWINGS
FL-20	PROVIDE SOLID BLOCKING IN THE WALLS AT ALL DOOR STOPS, VISUAL DESPLAY BOARDS, TOILET COMPARTMENTS, LAVATORY SUPPORTS, WALL HUNG CABINETS, AND ALL OTHER EQUIPMENT & ACCESSORY LOCAITONS AS PER STRUCT. BLOCKING SCHEDULE

bhd ARCHITECTS
www.bhdarchitects.com
Phone 801.571.0010
Fax 801.571.0303
Toll Free 888.571.0010
65 East Wadsworth Park Drive
Suite 205 Draper, Utah 84020

LICENSED ARCHITECT Lafe Theadore Harris 15 Aug 2024 6578-0301 STATE OF UTAH

THE CHURCH OF JESUS CHRIST OF LATTER-DAY SAINTS

Springwater 9
Vineyard UT Springwater Stake
Approx. 542 South Geneva Road
Vineyard, Utah 84059

BHD #: 2346
County Parcel: 39-228:0001
Plan Series: G300-MH-11
Owner #: 502-2004
Date: 15 Aug 2024

Drawing Issue and Revision Schedule

#	Date	Description

ENLARGED SERVING AREA AND MEMBER CUSTODIAL

A404

8/15/2024 1:06:52 PM

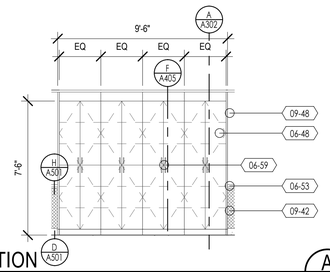

ELEVATION

1/4" = 1'-0"

A A405

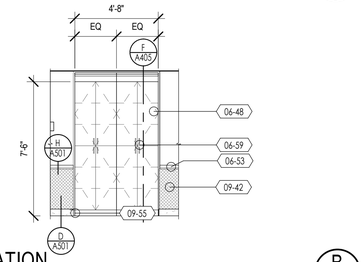

ELEVATION

1/4" = 1'-0"

B A405

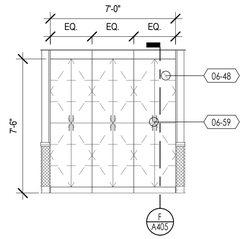

ELEVATION

1/4" = 1'-0"

G A405

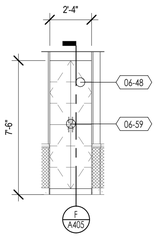

ELEVATION

1/4" = 1'-0"

I A405

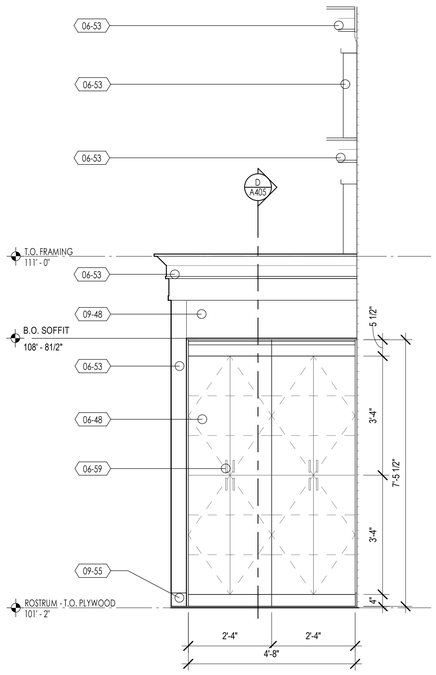

ROSTRUM EAST ELEVATION

1/2" = 1'-0"

C A405

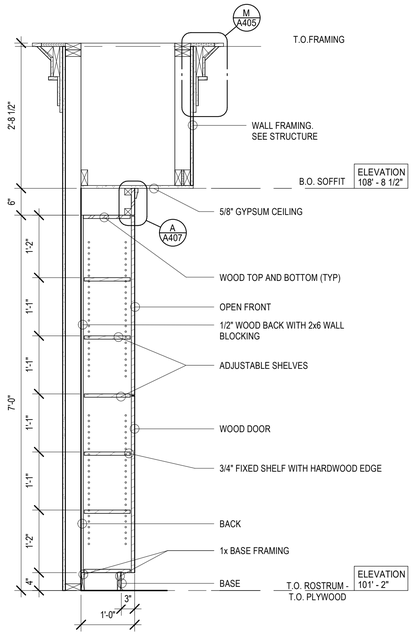

ROSTRUM CABINET SECTION

3/4" = 1'-0"

D A405

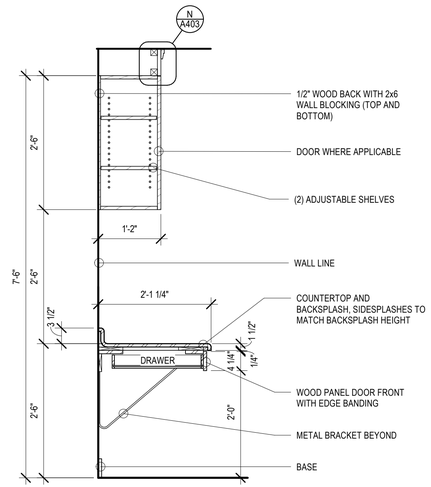

SECTION

3/4" = 1'-0"

E A405

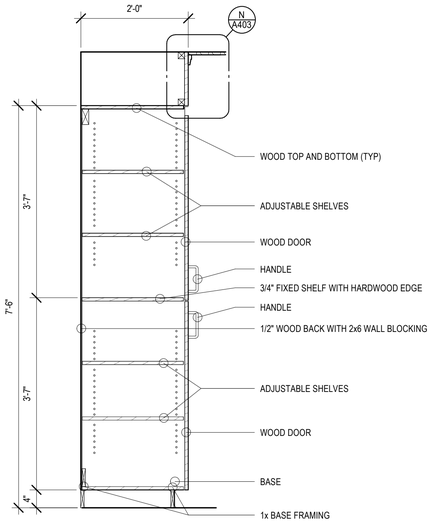

SECTION

3/4" = 1'-0"

F A405

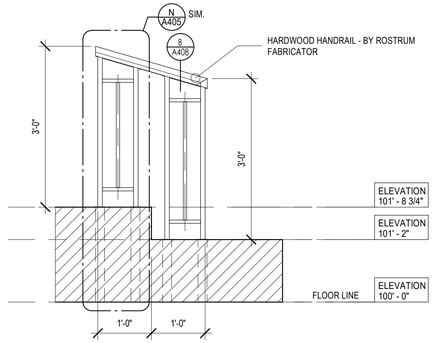

ROSTRUM RISER HANDRAIL ELEVATION

3/4" = 1'-0"

H A405

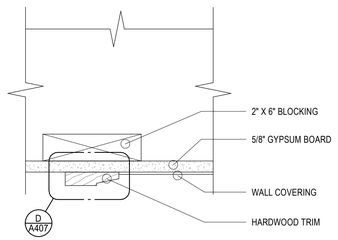

WOOD TRIM - SIDE

3" = 1'-0"

J A405

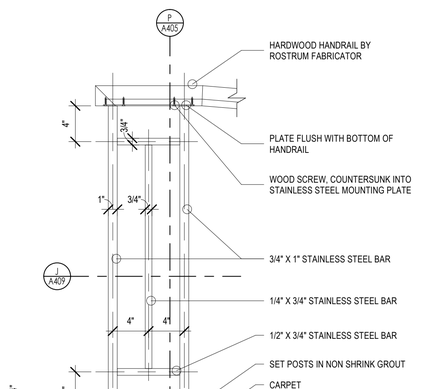

ROSTRUM HANDRAIL DETAIL

1 1/2" = 1'-0"

N A405

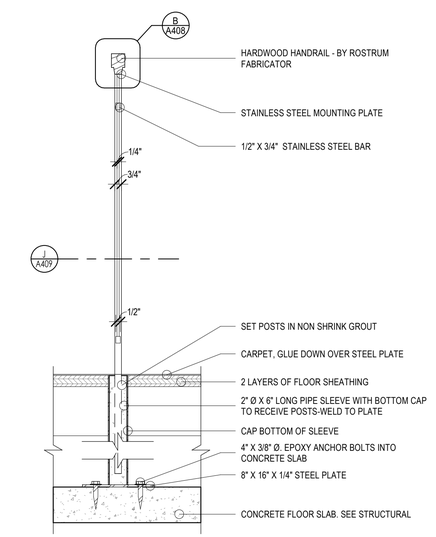

ROSTRUM HANDRAIL DETAIL

1 1/2" = 1'-0"

P A405

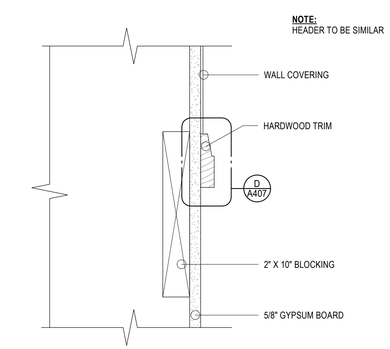

WOOD TRIM SILL

3" = 1'-0"

K A405

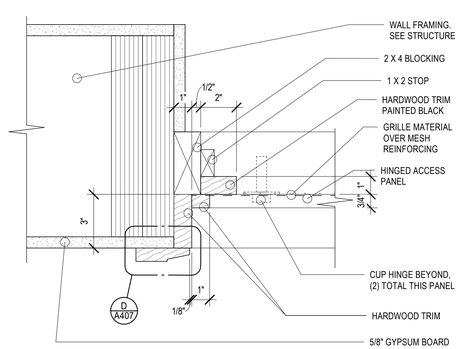

PANEL SIDE

3" = 1'-0"

L A405

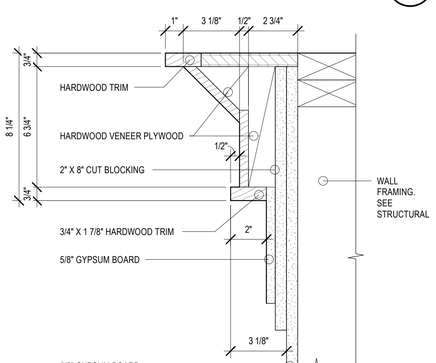

WOOD TRIM

3" = 1'-0"

M A405

8/15/2024 1:06:54 PM

bhd ARCHITECTS
www.bhdarchitects.com
Phone 801.571.0010
Fax 801.571.0303
Toll Free 888.571.0010
65 East Wadsworth Park Drive
Suite 205 Draper, Utah 84020

LICENSED ARCHITECT
Lafe Theadore Harris
15 Aug 2024
STATE OF UTAH

THE CHURCH OF JESUS CHRIST OF LATTER-DAY SAINTS

Springwater 9
Vineyard UT Springwater Stake

Approx. 540 South Geneva Road
Vineyard, Utah 84059

Owner #: 502-2004
Plan Series: G300-MH-11
County Parcel: 39-228:0001
BHD #: 2346
Date: 15 Aug 2024

Drawing Issue and Revision Schedule

#	Date	Description

INTERIOR ELEVATIONS AND DETAILS

A405

KEYNOTES

XX-XX — KEYNOTE MATERIAL

MATERIAL / SPECIFICATION KEYNOTES

06-48	WOOD VENEER FACED ARCHITECTURAL CABINETS, SEE DETAILS & SPECIFICATION
06-53	HARDWOOD TRIM, SEE DETAILS & SPECIFICATION
06-59	CABINET LOCK, SEE SPECIFICATION
09-42	SISAL WALL COVERING AS SELECTED, SEE FINISH SCHEDULE/ SPECIFICATION
09-48	INTERIOR PAINTED GYPSUM BOARD, SEE PAINT SCHEDULE/ SPECIFICATION
09-55	CARPET BASE, SEE FINISH SCHEDULE/ SPECIFICATION

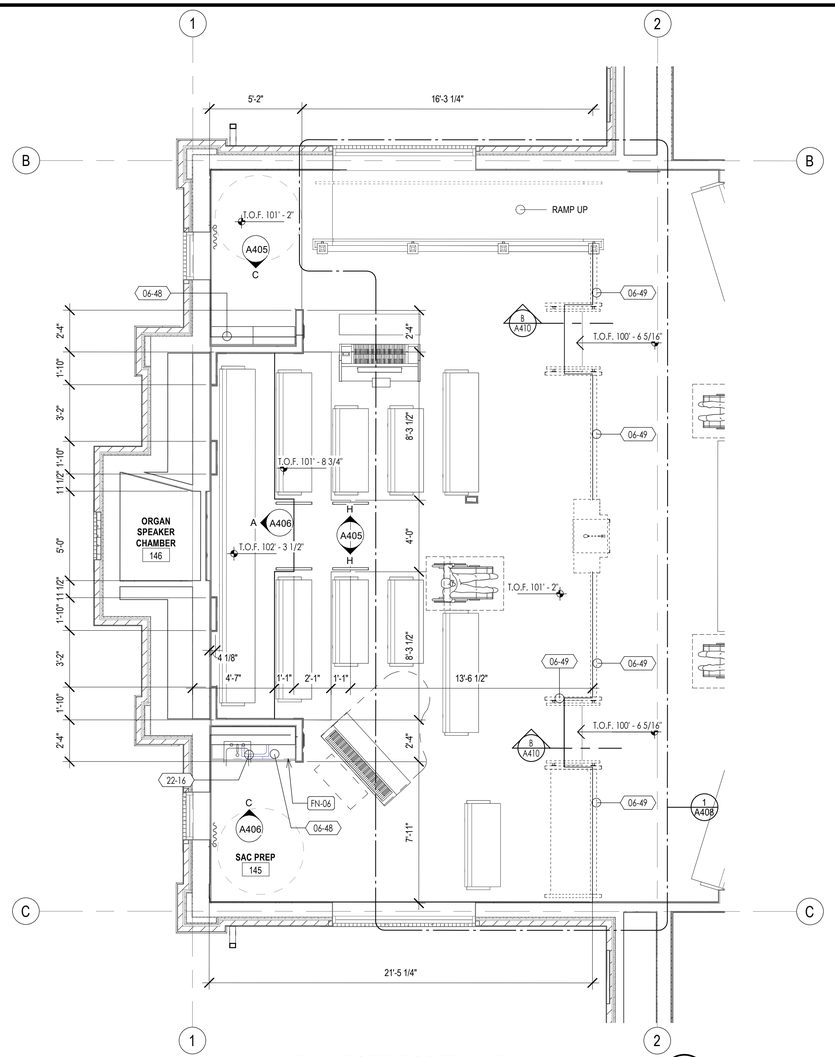

ENLARGED ROSTRUM PLAN

1/4" = 1'-0"

A406

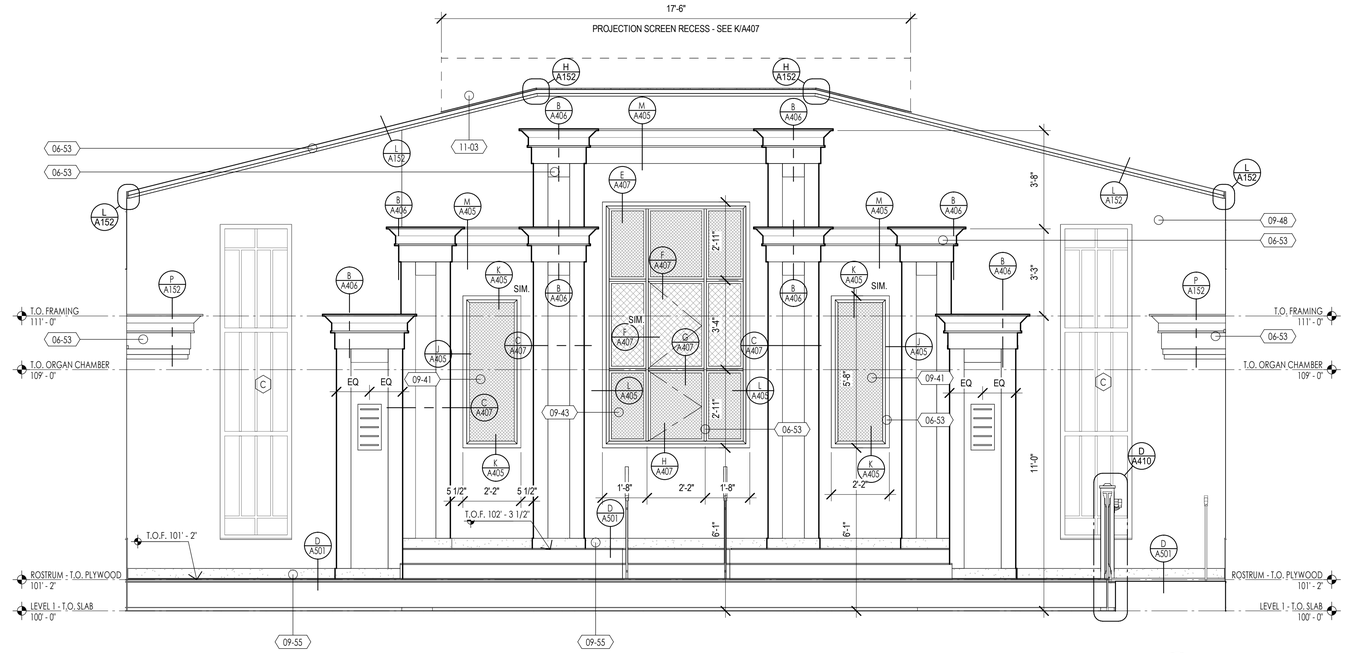

ROSTRUM ELEVATION

3/8" = 1'-0"

A406

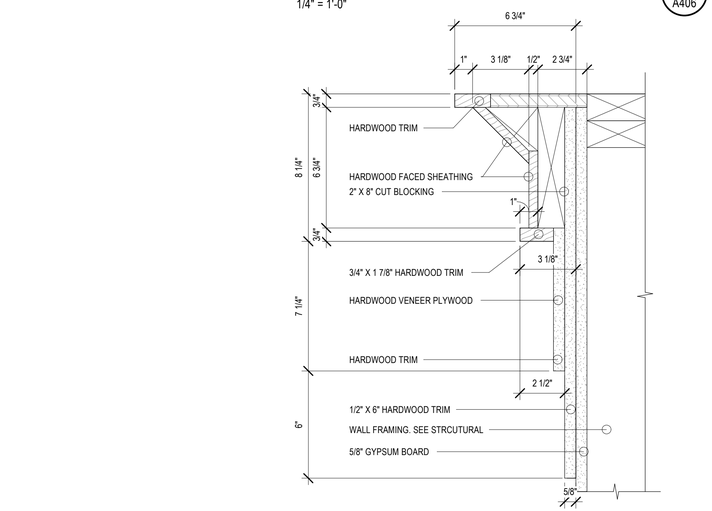

WOOD TRIM

3" = 1'-0"

B
A406

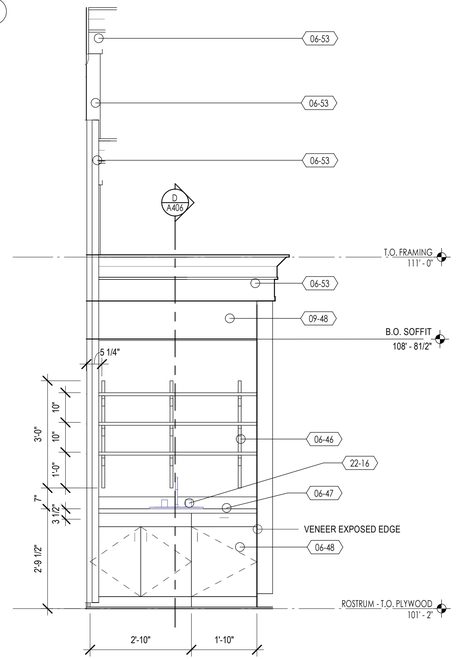

SAC. PREP. ELEVATION

1/2" = 1'-0"

C
A406

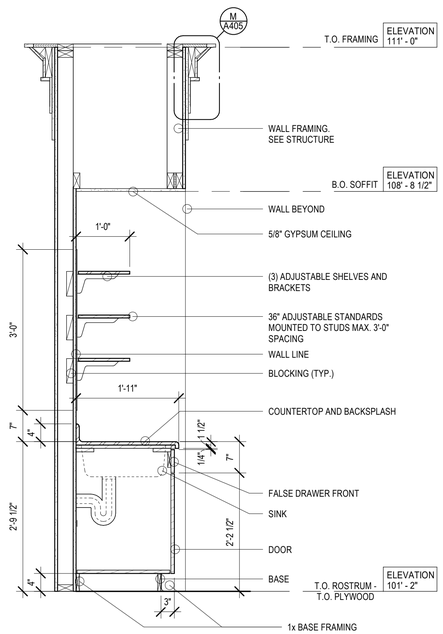

SAC. PREP. CABINET SECTION

3/4" = 1'-0"

D
A406

GENERAL NOTES

1. AT ORGAN SPEAKER CHAMBER, ALL WALLS TO BE COVERED WITH 5/8" GYPSUM BOARD. GYPSUM BOARD TO BE GLUED AND SCREW IN PLACE.
2. ALL EXPOSED GYPSUM BOARD AND WOOD SURFACES TO BE PAINTED BLACK IN ORGAN SPEAKER CHAMBER

KEYNOTES

XX-XX — KEYNOTE MATERIAL

MATERIAL / SPECIFICATION KEYNOTES

06-46	SHELVING, SEE DETAILS
06-47	PLASTIC LAMINATE, SEE DETAILS & SPECIFICATION
06-48	WOOD VENEER FACED ARCHITECTURAL CABINETS, SEE DETAILS & SPECIFICATION
06-49	ROSTRUM CASEWORK, SEE DETAILS & SPECIFICATION
06-53	HARDWOOD TRIM, SEE DETAILS & SPECIFICATION
09-41	VINYL COATED WALL COVERING AS SELECTED, SEE FINISH SCHEDULE/ SPECIFICATION
09-43	ACOUSTIC WALL COVERING & GRILLS AS SELECTED, SEE FINISH SCHEDULE/ SPECIFICATION
09-48	INTERIOR PAINTED GYPSUM BOARD, SEE PAINT SCHEDULE/ SPECIFICATION
09-55	CARPET BASE, SEE FINISH SCHEDULE/ SPECIFICATION
11-03	ELECTRICALLY OPERATED PROJECTION SCREEN, SEE DETAILS & SPECIFICATION
22-16	COMMERCIAL STAINLESS SINGLE BASIN SINK, SEE PLUMBING DRAWINGS & SPECIFICATION

FP-XX — KEYNOTE INSTRUCTION

INSTRUCTIONAL KEYNOTES

FN-06	COUNTERTOP, SEE DETAILS, INTERIOR ELEVATIONS, & FINISH SCHEDULE

bhd ARCHITECTS
www.bhdarchitects.com
Phone 801.571.0010
Fax 801.571.0303
Toll Free 888.571.0010
65 East Wadsworth Park Drive
Suite 205 Draper, Utah 84020

LICENSED ARCHITECT
Lafe Theadore Harris
6278878-0301
15 Aug 2024
STATE OF UTAH

THE CHURCH OF JESUS CHRIST OF LATTER-DAY SAINTS

Springwater 9
Vineyard UT Springwater Stake

Approx. 542 South Geneva Road
Vineyard, Utah 84059

BHD #: 2346
County Parcel: 39:228:0001
Plan Series: G300-MH-11
Owner #: 502-2004
Date: 15 Aug 2024

Drawing Issue and Revision Schedule

#	Date	Description

ENLARGED ROSTRUM PLAN AND ELEVATIONS

A406

8/15/2024 1:06:57 PM

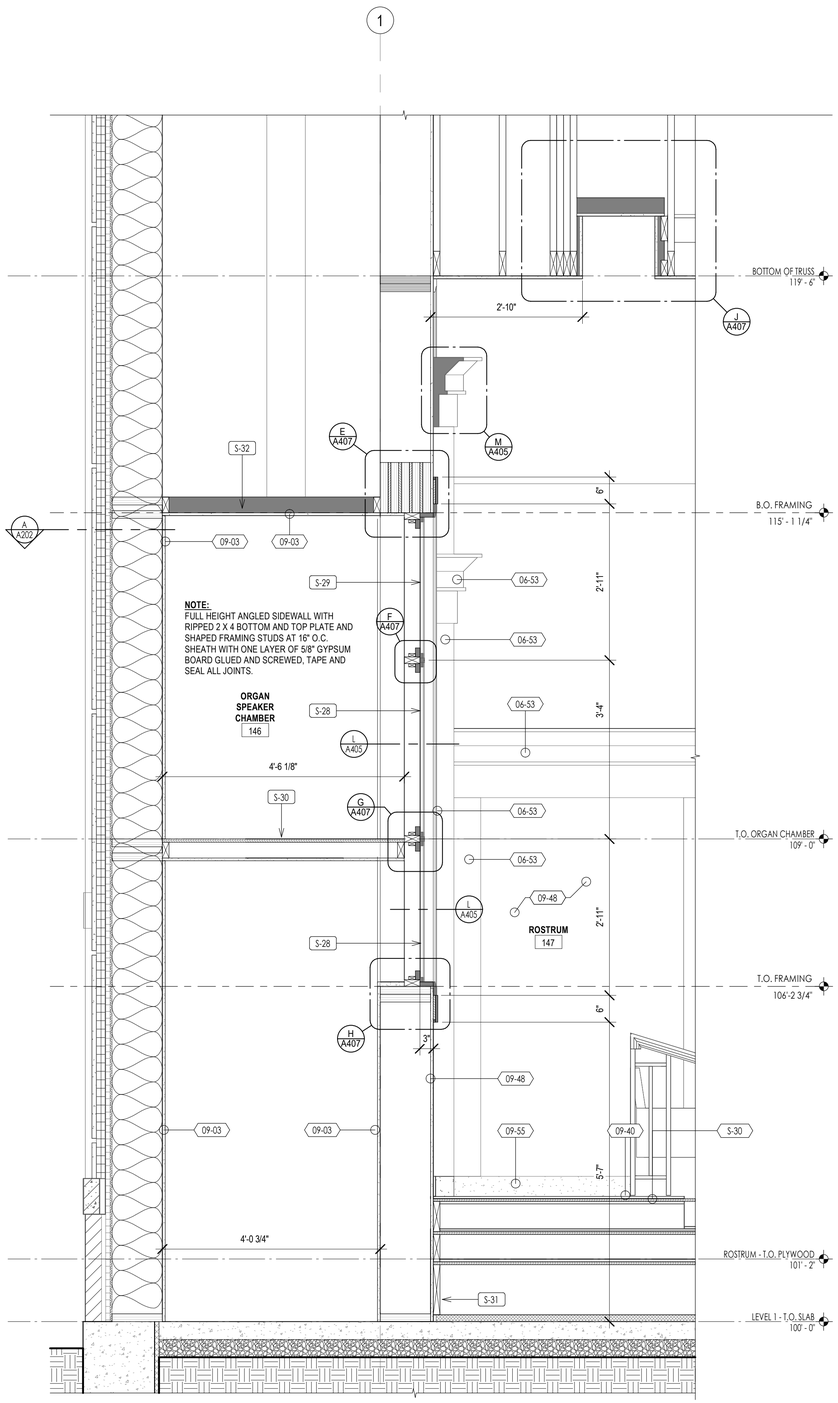

ORGAN SPEAKER CHAMBER

3/4" = 1'-0"

K A407

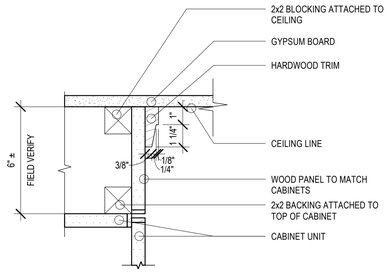

CABINET TRIM

3" = 1'-0"

A A407

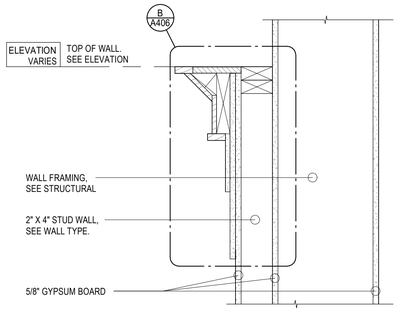

TRIM DETAIL

1 1/2" = 1'-0"

B A407

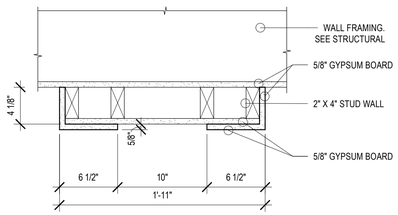

ROSTRUM WALL SECTION

1 1/2" = 1'-0"

C A407

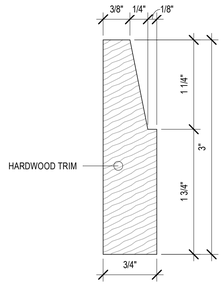

WOOD TRIM

12" = 1'-0"

D A407

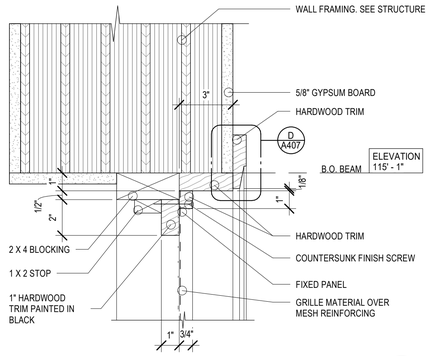

PANEL HEAD

3" = 1'-0"

E A407

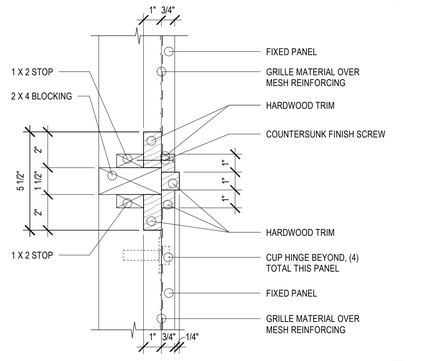

ACCESS PANEL

3" = 1'-0"

F A407

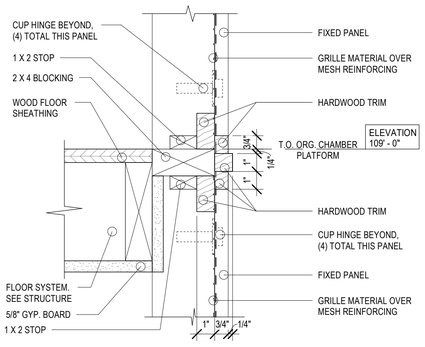

ACCESS PANELS

3" = 1'-0"

G A407

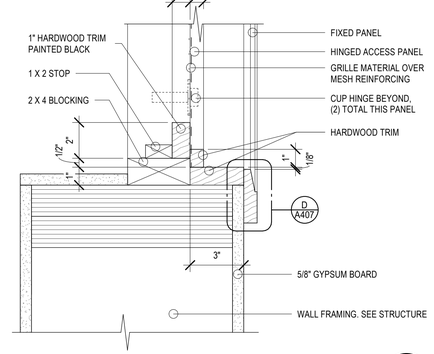

PANEL SILL

3" = 1'-0"

H A407

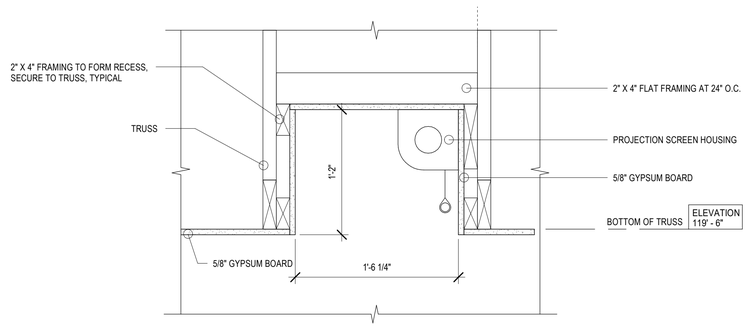

PROJECTION SCREEN RESCESS

1 1/2" = 1'-0"

J A407

GENERAL NOTES

1. AT ORGAN SPEAKER CHAMBER, ALL WALLS TO BE COVERED WITH 5/8" GYPSUM BOARD. GYPSUM BOARD TO BE GLUED AND SCREW IN PLACE.
2. ALL EXPOSED GYPSUM BOARD AND WOOD SURFACES TO BE PAINTED BLACK IN ORGAN SPEAKER CHAMBER

KEYNOTES

XX-XX — KEYNOTE MATERIAL

MATERIAL / SPECIFICATION KEYNOTES

06-53	HARDWOOD TRIM, SEE DETAILS & SPECIFICATION
09-03	5/8" GYPSUM BOARD, DETAILS & SPECIFICATION
09-40	SHEET CARPET AS SELECTED, SEE FINISH SCHEDULE/ SPECIFICATION
09-48	INTERIOR PAINTED GYPSUM BOARD, SEE PAINT SCHEDULE/ SPECIFICATION
09-55	CARPET BASE, SEE FINISH SCHEDULE/ SPECIFICATION

FP-XX — KEYNOTE INSTRUCTION

INSTRUCTIONAL KEYNOTES

S-28	HINGED ACCESS PANEL
S-29	FIXED PANEL
S-30	WOOD FLOOR SHEATHING, GLUE AND SCREW IN PLACE OVER 2X4 FLOOR JOIST AT 16" O.C.
S-31	ROSTRUM FLOOR FRAMING, SEE STRUCTURAL
S-32	2X4 STUD AT 24" O.C. WITH 1 LAYER OF 5/8" GYPSUM BOARD, GLUE AND SCREW IN PLACE

bhd ARCHITECTS
www.bhdarchitects.com
Phone 801.571.0010
Fax 801.571.0303
Toll Free 888.571.0010
65 East Wadsworth Park Drive
Suite 205 Draper, Utah 84020

LICENSED ARCHITECT
Lafe Theadore Harris
15 Aug 2024
(5278878-0301)
STATE OF UTAH

THE CHURCH OF JESUS CHRIST OF LATTER-DAY SAINTS

Springwater 9
Vineyard UT Springwater Stake

Approx. 542 South Geneva Road
Vineyard, Utah 84059

Owner #: 502-2004
Plan Series: G300-MH-11
County Parcel: 39-228-0001
BHD #: 2346
Date: 15 Aug 2024

Drawing Issue and Revision Schedule

#	Date	Description

ROSTRUM FRONT WALL ELEVATION DETAILS

A407

8/15/2024 1:04:59 PM

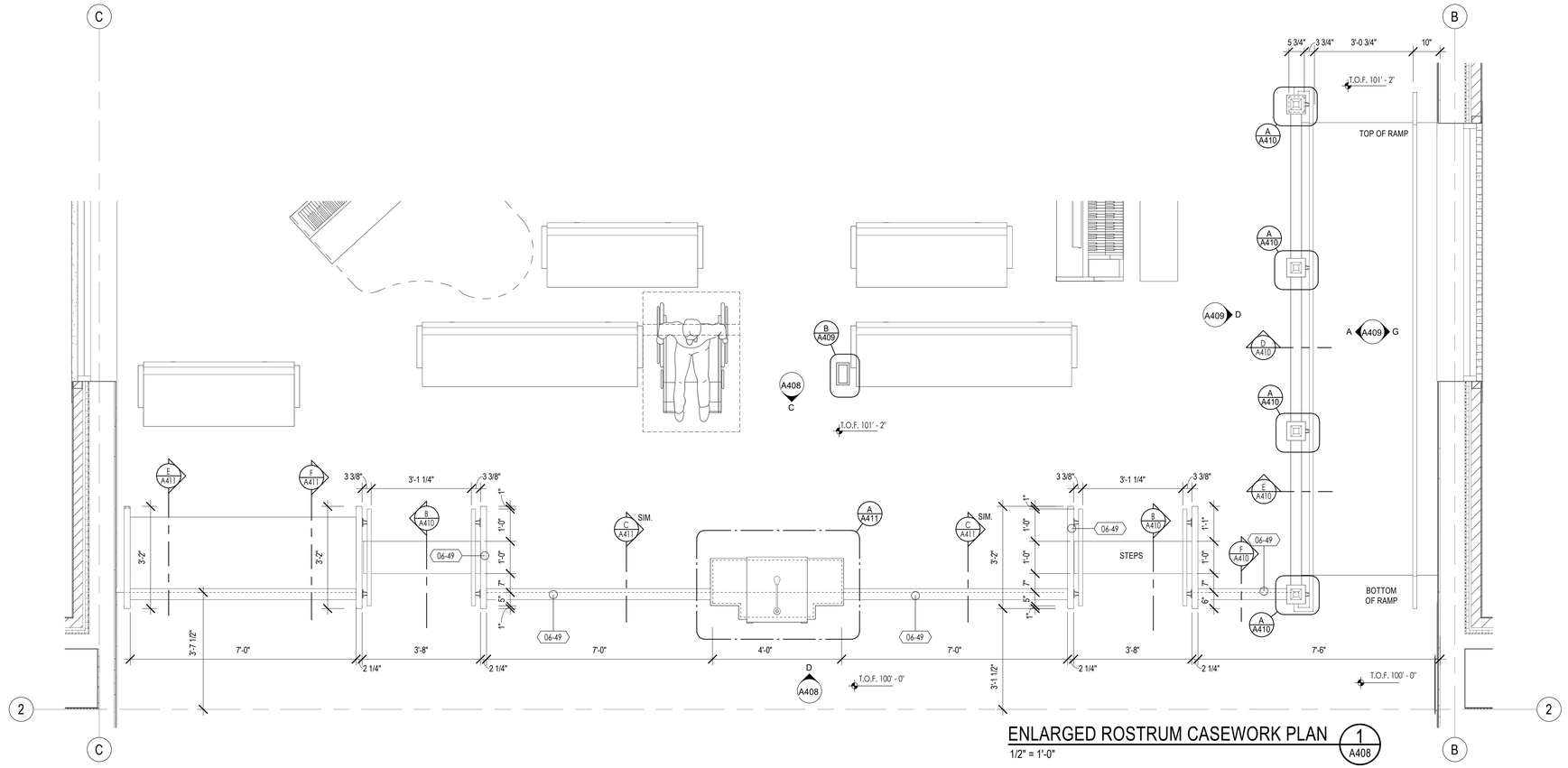

ENLARGED ROSTRUM CASEWORK PLAN

1/2" = 1'-0"

1 A408

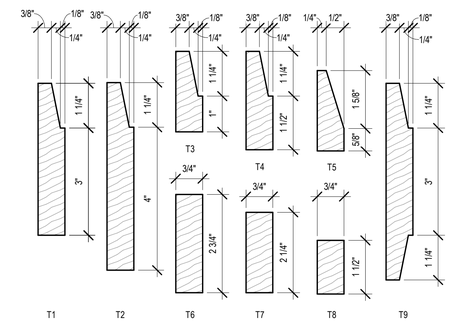

MILLWORK HARDWOOD TRIM

6" = 1'-0"

A A408

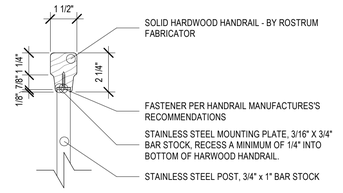

TYPICAL HANDRAIL PROFILE DETAIL

3" = 1'-0"

B A408

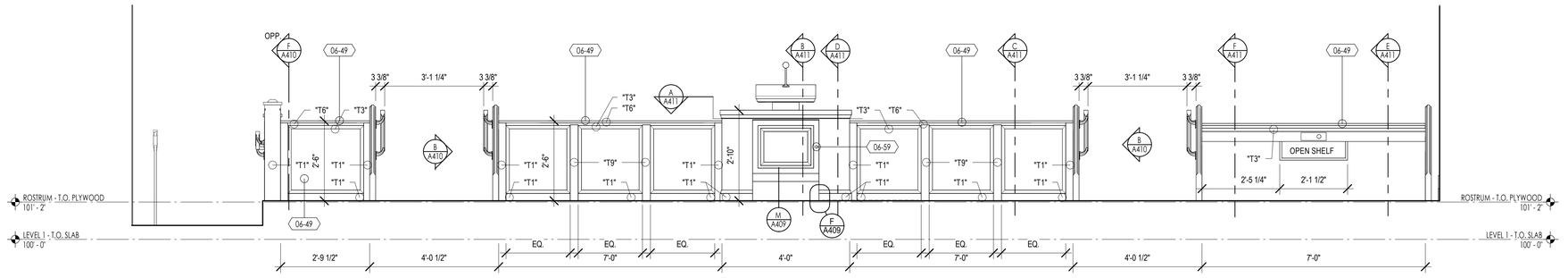

ROSTRUM CASEWORK REAR ELEV.

1/2" = 1'-0"

C A408

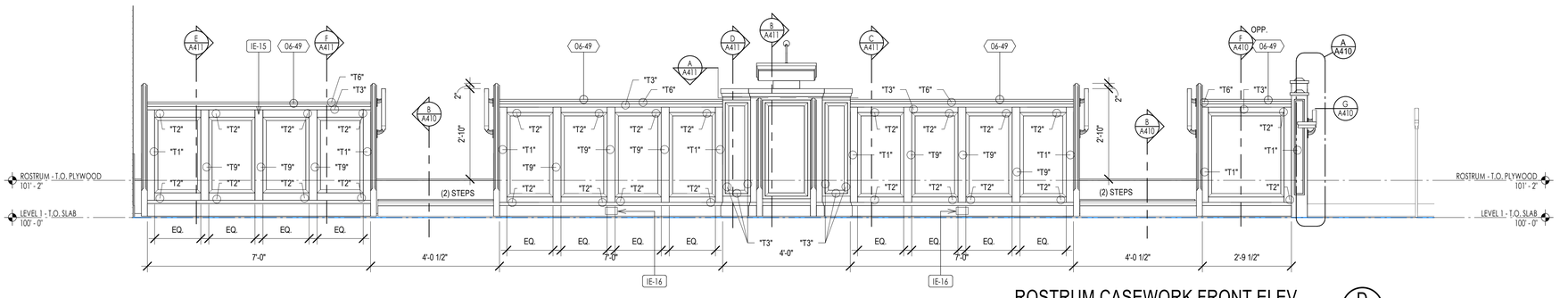

ROSTRUM CASEWORK FRONT ELEV.

1/2" = 1'-0"

D A408

GENERAL NOTES

1. HARDWOOD TRIM DESIGNATIONS (" T# ") REFER TO A/A408.
2. VERIFY MANUFACTURER'S REQUIREMENTS FOR INSTALLATION OF ADJUSTABLE PULPIT MECHANISM (HEIGHT OF SHELF)

KEYNOTES

XX-XX — KEYNOTE MATERIAL

MATERIAL / SPECIFICATION KEYNOTES

06-49	ROSTRUM CASEWORK, SEE DETAILS & SPECIFICATION
06-59	CABINET LOCK, SEE SPECIFICATION

FP-XX — KEYNOTE INSTRUCTION

INSTRUCTIONAL KEYNOTES

IE-15	MICROPHONE BY SOUND INSTALLER
IE-16	ROSTRUM - MICROPHONE OUTLET

bhd ARCHITECTS
www.bhdarchitects.com
Phone 801.571.0010
Fax 801.571.0303
Toll Free 888.571.0010
65 East Wadsworth Park Drive
Suite 205 Draper, Utah 84020

LICENSED ARCHITECT Lafe Theadore Harris 15 Aug 2024 #7-8878-0301 STATE OF UTAH

THE CHURCH OF JESUS CHRIST OF LATTER-DAY SAINTS

Springwater 9
Vineyard UT Springwater Stake

Approx. 542 South Geneva Road
Vineyard, Utah 84059

BHD #: 2346
County Parcel: 39-228:0001
Plan Series: G300-MH-11
Owner #: 502-2004
Date: 15 Aug 2024

Drawing Issue and Revision Schedule

#	Date	Description

ROSTRUM CASEWORK ELEVATIONS

A408

8/15/2024 1:07:02 PM

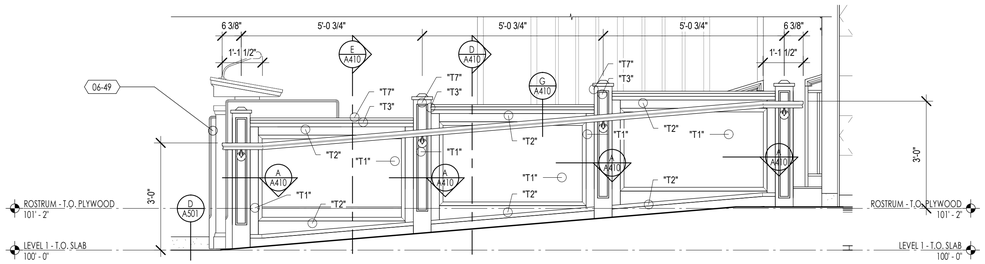

LOWER RAMP SIDEWALL

1/2" = 1'-0"

A409

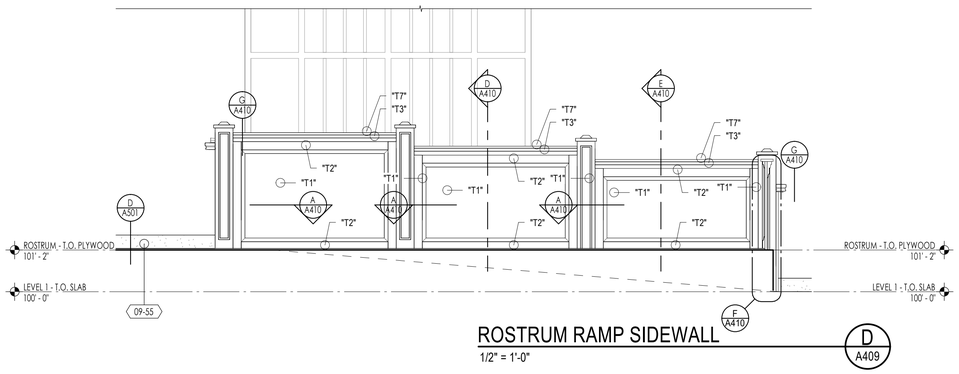

ROSTRUM RAMP SIDEWALL

1/2" = 1'-0"

D
A409

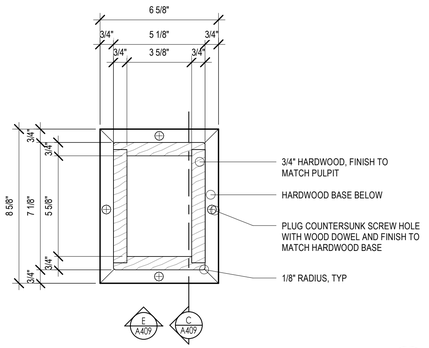

CONTROL PEDESTAL

3" = 1'-0"

B
A409

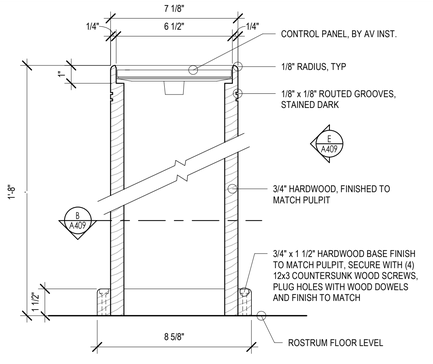

CONTROL PEDESTAL SECTION

3" = 1'-0"

C
A409

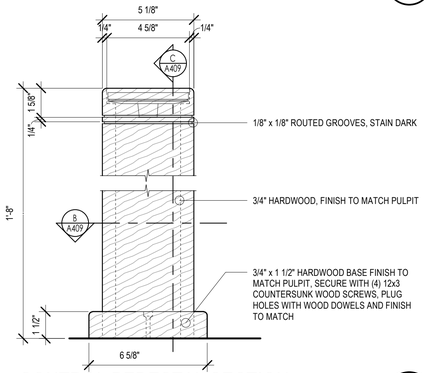

CONTROL PEDESTAL SECTION

3" = 1'-0"

E
A409

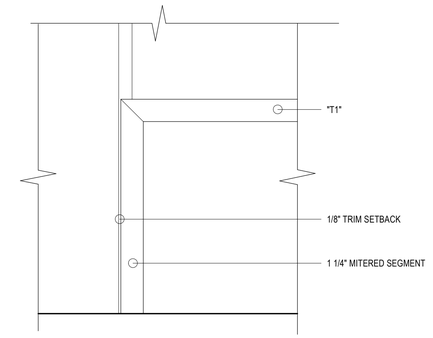

PULPIT CORNER TRIM

3" = 1'-0"

F
A409

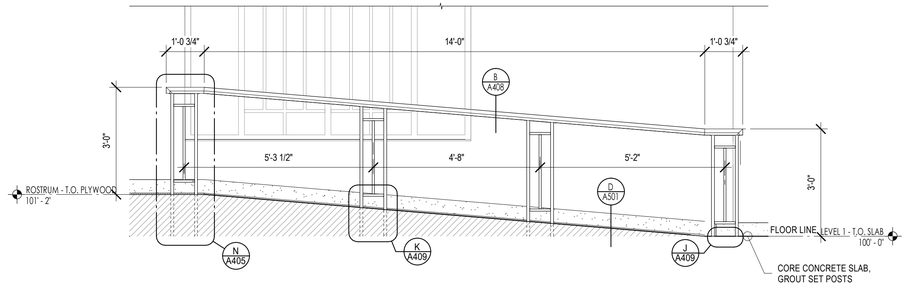

UPPER RAMP SIDEWALL

1/2" = 1'-0"

G
A409

NOTE:
ROUNDED CORNERS TO BE 3/32" RADIUS

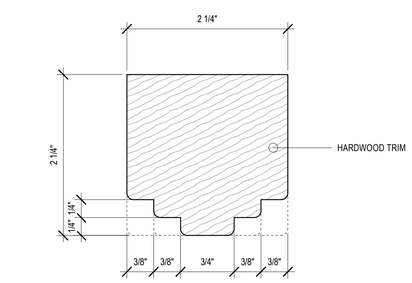

PULPIT TRIM

12" = 1'-0"

H
A409

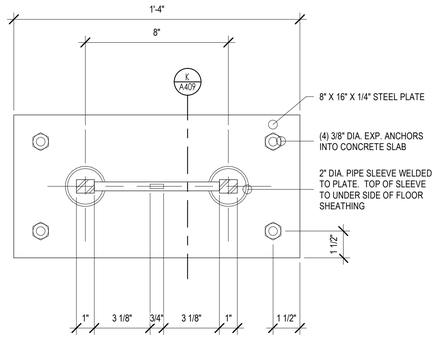

ROSTRUM HANDRAIL BASE DETAIL

3" = 1'-0"

J
A409

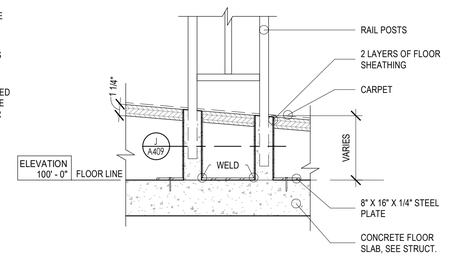

ROSTRUM HANDRAIL BASE DETAIL

1 1/2" = 1'-0"

K
A409

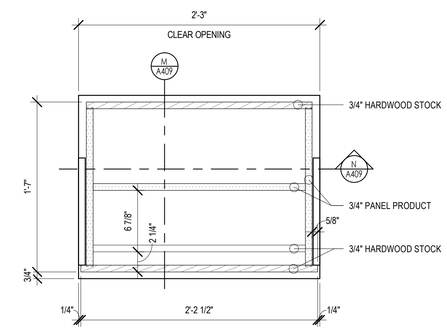

PULL-OUT STEP

1 1/2" = 1'-0"

L
A409

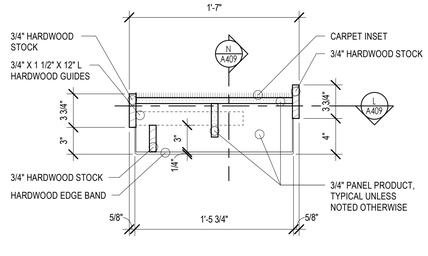

PULL-OUT STEP

1 1/2" = 1'-0"

M
A409

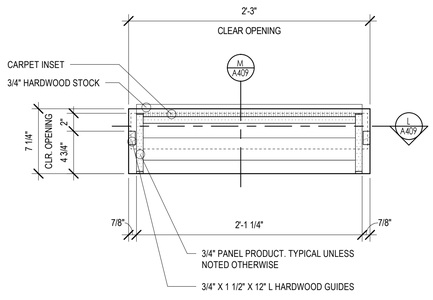

PULL OUT SETP

1 1/2" = 1'-0"

N
A409

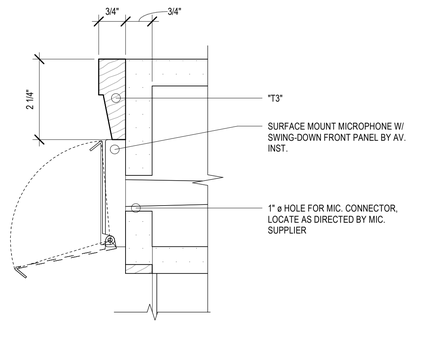

SACRAMENT TRIM

6" = 1'-0"

P
A409

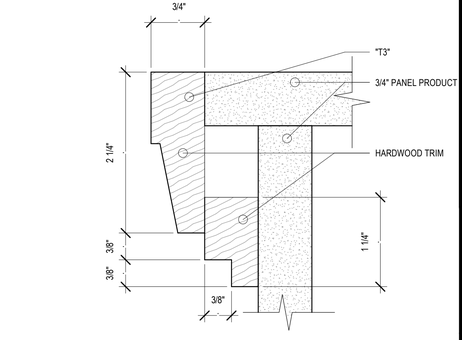

LECTERN EDGE

3" = 1'-0"

Q
A409

bhd ARCHITECTS
www.bhdarchitects.com
Phone 801.571.0010
Fax 801.571.0303
Toll Free 888.571.0010
65 East Wadsworth Park Drive
Suite 205 Draper, Utah 84020

LICENSED ARCHITECT
Lafe Theadore Harris
15 Aug 2024
No. 8878-0301
STATE OF UTAH

THE CHURCH OF
JESUS CHRIST
OF LATTER-DAY SAINTS

Springwater 9
Vineyard UT Springwater Stake

Approx. 542 South Geneva Road
Vineyard, Utah 84059

Owner #: 502.2004
Plan Series: G300-MH-11
County Parcel: 39-228:0001
BHD #: 2346
Date: 15 Aug 2024

Drawing Issue and Revision Schedule

#	Date	Description

ROSTRUM CASEWORK ELEVATIONS AND DETAILS

A409

8/15/2024 1:07:04 PM

GENERAL NOTES

1. HARDWOOD TRIM DESIGNATIONS (* T# *) REFER TO A/A408.
2. VERIFY MANUFACTURER'S REQUIREMENTS FOR INSTALLATION OF ADJUSTABLE PULPIT MECHANISM (HEIGHT OF SHELF)

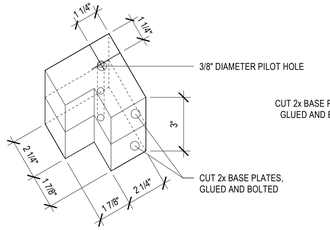

CORNER ANCHOR BASE PLATE

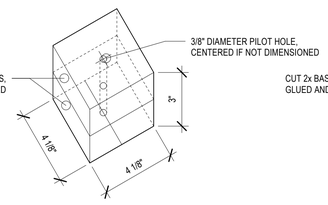

FULL ANCHOR BASE PLATE

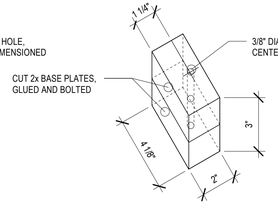

HALF ANCHOR BASE PLATE

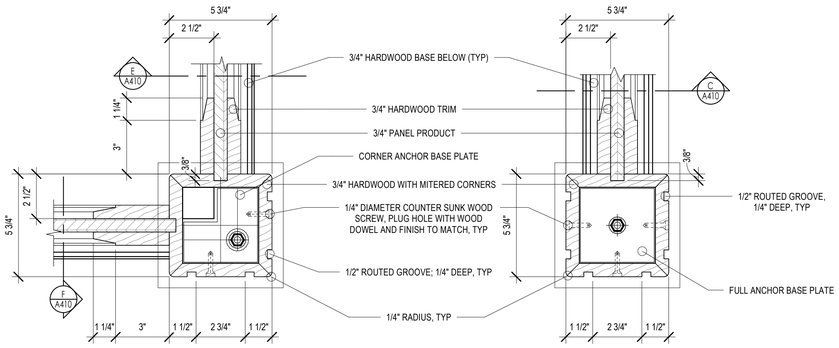

CORNER NEWEL POST

END NEWEL POST

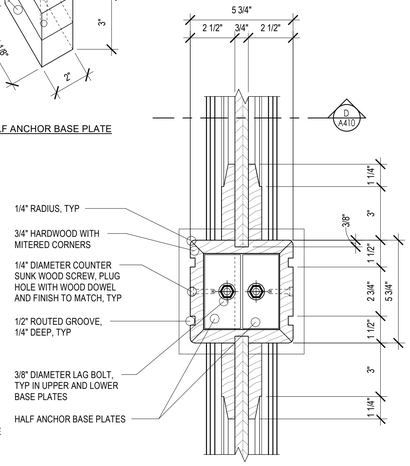

INTERMEDIATE NEWEL POST

NOTE:
FLOOR ANCHORAGE TO BE 3/8" DIAMETER x 6" EXPANSION BOLT (INTO CONCRETE) OR 3/8" DIAMETER x 4" LAG BOLT (INTO WOOD)

NEWEL POST TYPES

3" = 1'-0"

A A410

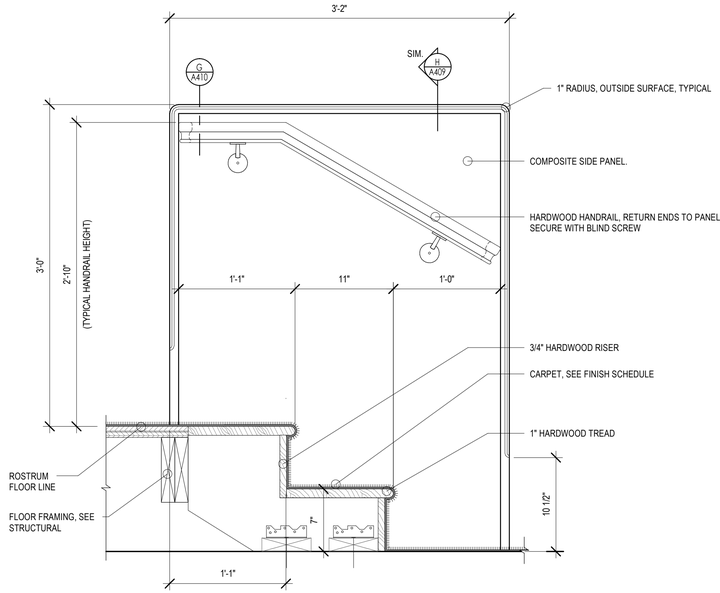

ROSTRUM STEPS SIDE PANEL

1 1/2" = 1'-0"

B A410

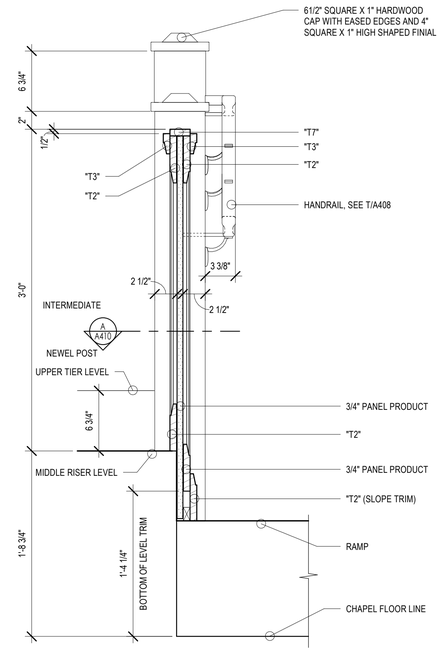

RAMP SIDEWALL

1 1/2" = 1'-0"

C A410

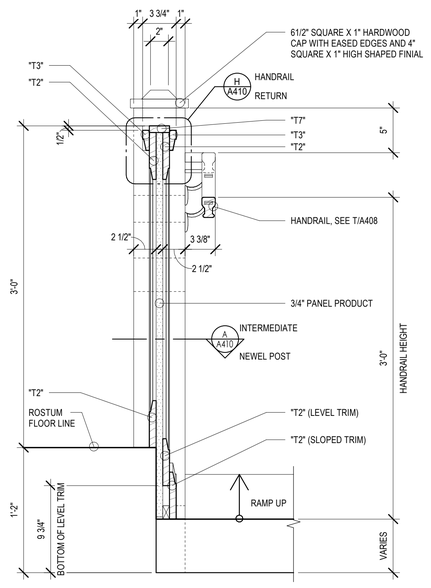

RAMP SIDEWALL

1 1/2" = 1'-0"

D A410

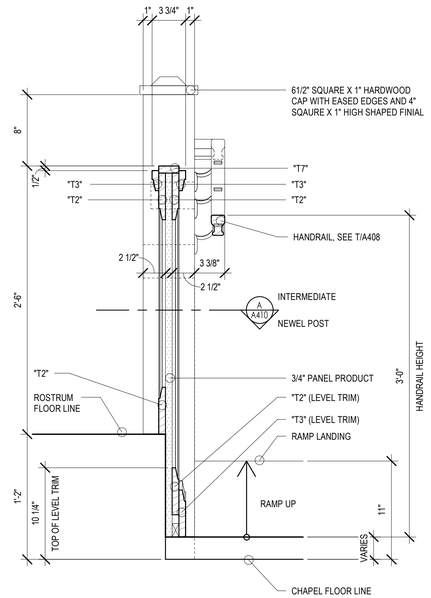

RAMP SIDEWALL

1 1/2" = 1'-0"

E A410

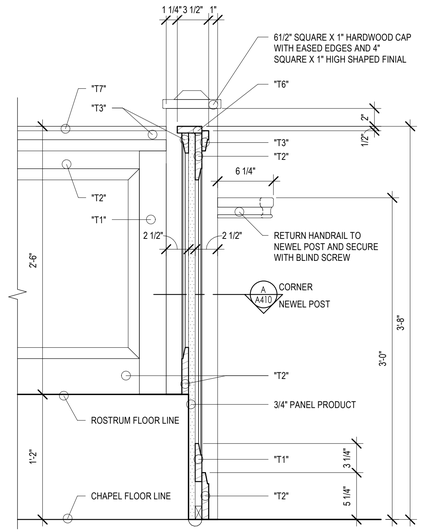

FRONT MODESTY WALL

1 1/2" = 1'-0"

F A410

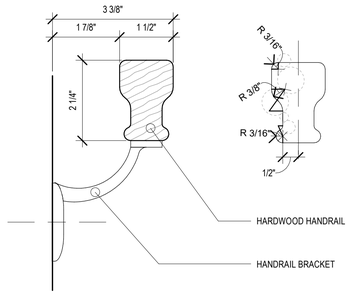

HANDRAIL SECTION

6" = 1'-0"

G A410

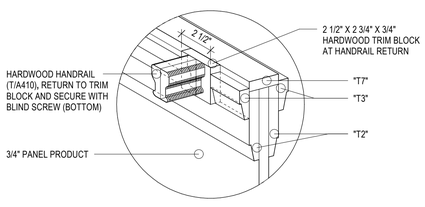

HANDRAIL RETURN

1 1/2" = 1'-0"

H A410

bhd ARCHITECTS
www.bhdarchitects.com
Phone 801.571.0010
Fax 801.571.0303
Toll Free 888.571.0010
65 East Wadsworth Park Drive
Suite 205 Draper, Utah 84020

LICENSED ARCHITECT
Lafe Theadore Harris
15 Aug 2024
STATE OF UTAH

THE CHURCH OF JESUS CHRIST OF LATTER-DAY SAINTS

Springwater 9
Vineyard UT Springwater Stake

Approx. 542 South Geneva Road
Vineyard, Utah 84059

Owner #:	502-2004
Plan Series:	G300-MH-11
County Parcel:	39-228:0001
BHD #:	2346
Date:	15 Aug 2024

Drawing Issue and Revision Schedule

#	Description	Date

ROSTRUM CASEWORK DETAILS

A410

8/15/2024 1:07:05 PM

GENERAL NOTES

1. HARDWOOD TRIM DESIGNATIONS (* T# *) REFER TO A/A408.
2. VERIFY MANUFACTURER'S REQUIREMENTS FOR INSTALLATION OF ADJUSTABLE PULPIT MECHANISM (HEIGHT OF SHELF)

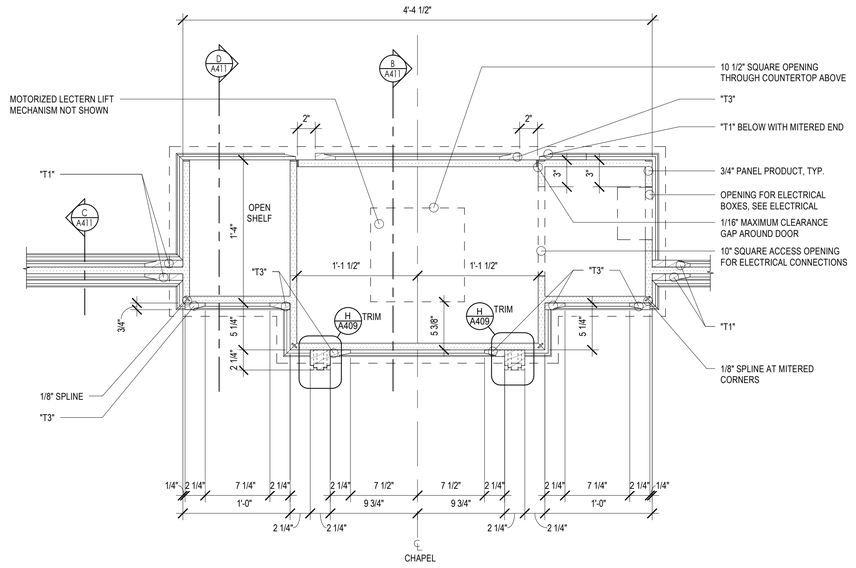

PULPIT AND MODESTY RAIL WALL — A411
1 1/2" = 1'-0"

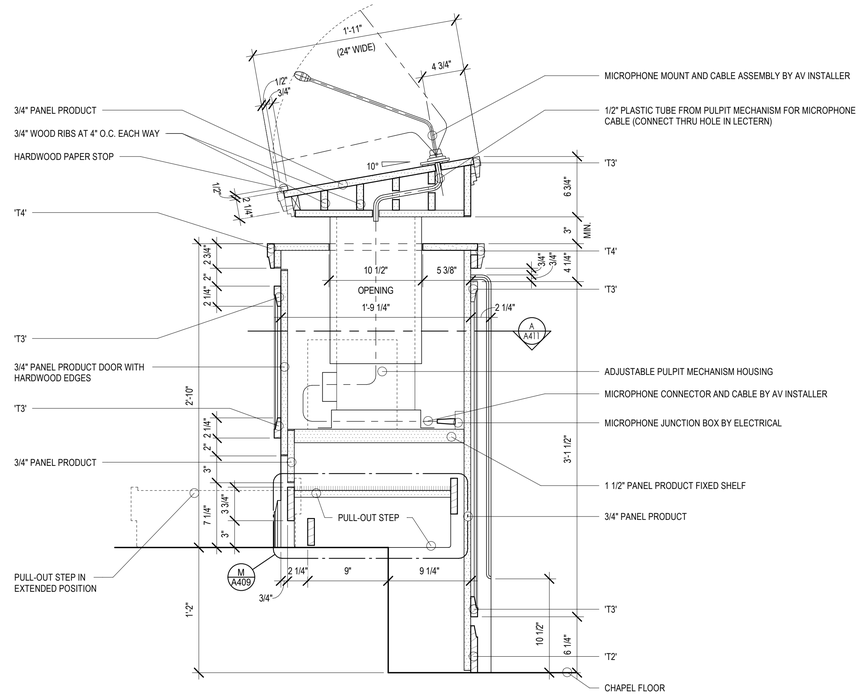

PULPIT — B A411
1 1/2" = 1'-0"

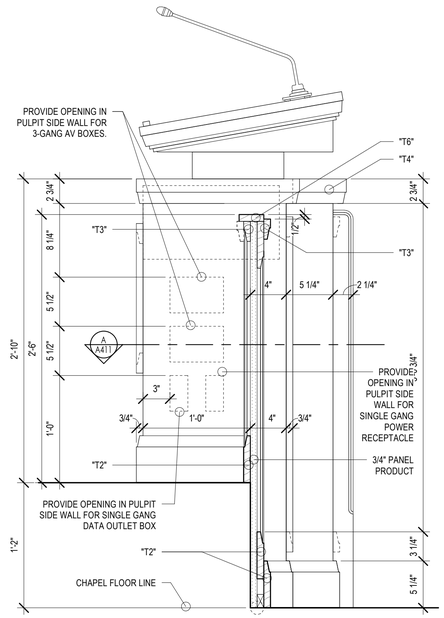

MODESTY WALL — C A411
1 1/2" = 1'-0"

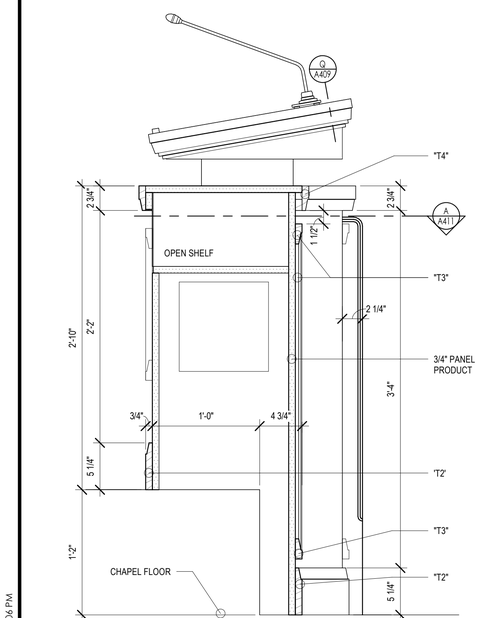

PULPIT — D A411
1 1/2" = 1'-0"

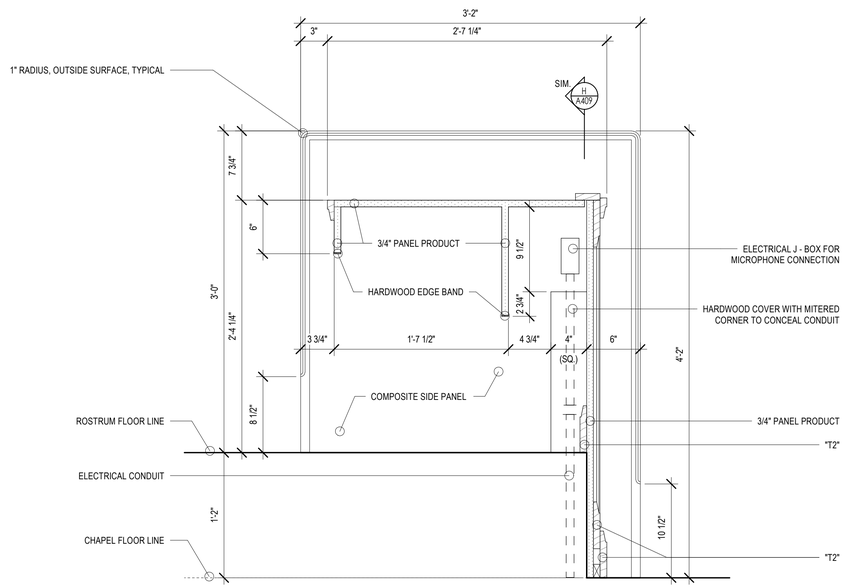

SACRAMENT TABLE — E A411
1 1/2" = 1'-0"

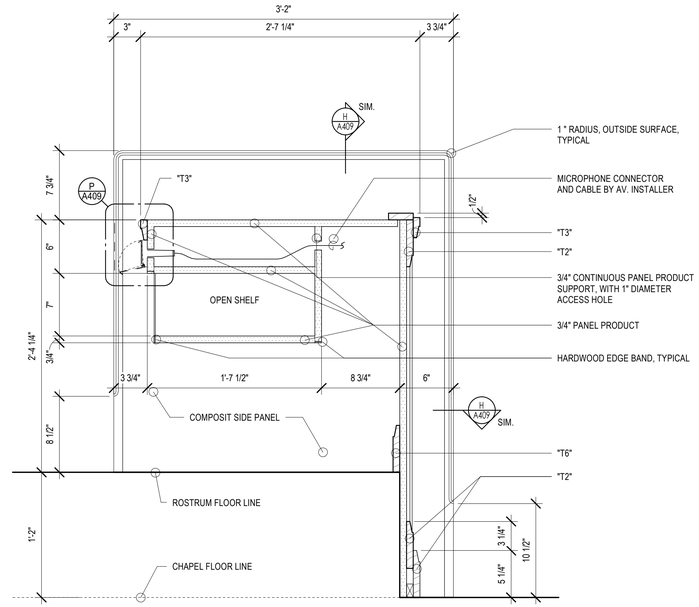

SACRAMENT TABLE — F A411
1 1/2" = 1'-0"

8/15/2024 1:07:06 PM

bhd ARCHITECTS
www.bhdarchitects.com
Phone 801.571.0010
Fax 801.571.0303
Toll Free 888.571.0010
65 East Wadsworth Park Drive
Suite 205 Draper, Utah 84020

LICENSED ARCHITECT — Lafe Theadore Harris — 15 Aug 2024 — 6278878-0301 — STATE OF UTAH

THE CHURCH OF JESUS CHRIST OF LATTER-DAY SAINTS

Springwater 9
Vineyard UT Springwater Stake

Approx. 542 South Geneva Road
Vineyard, Utah 84059

BHD #: 2346
County Parcel: 39:228:0001
Plan Series: C300-MH-11
Owner #: 502-2004
Date: 15 Aug 2024

Drawing Issue and Revision Schedule

#	Date	Description

ROSTRUM CASEWORK DETAILS

A411

GENERAL NOTES

1. HARDWOOD TRIM DESIGNATIONS (* T# *) REFER TO A/A408.

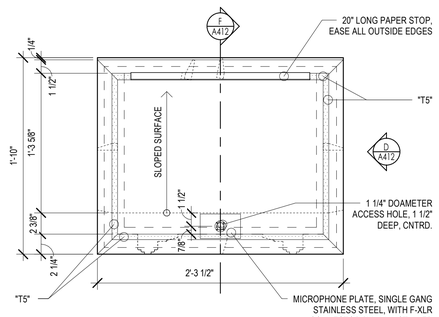

LECTERN TOP
1 1/2" = 1'-0"
A / A412

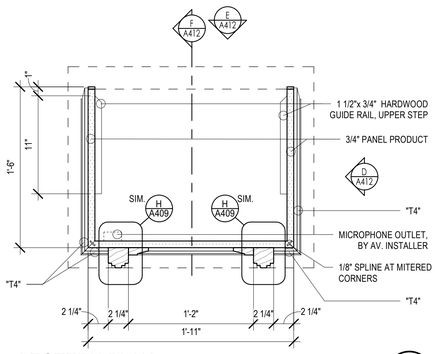

LECTERN PLAN
1 1/2" = 1'-0"
B / A412

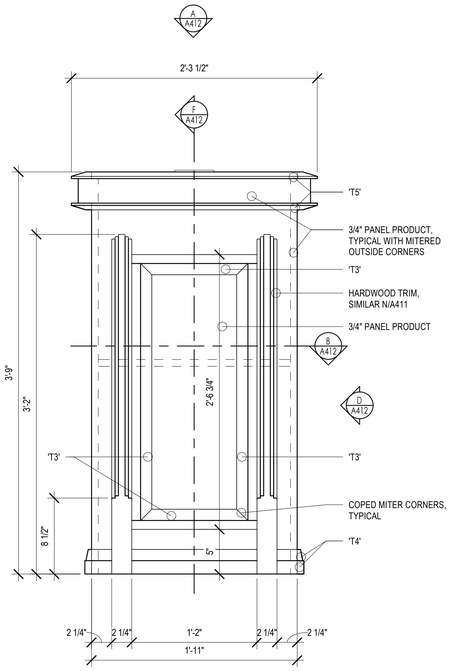

LECTERN FRONT
1 1/2" = 1'-0"
C / A412

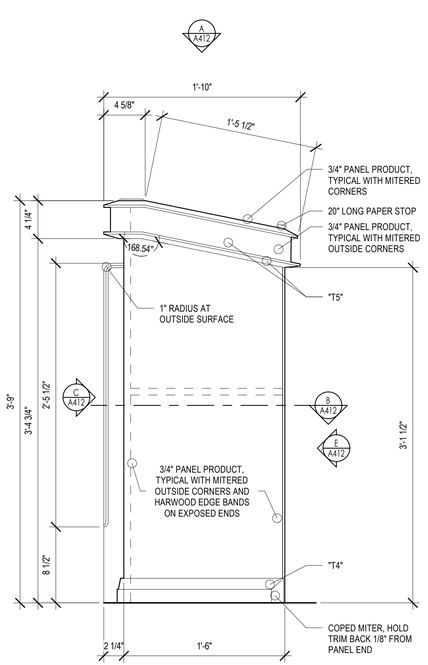

LECTERN SIDE
1 1/2" = 1'-0"
D / A412

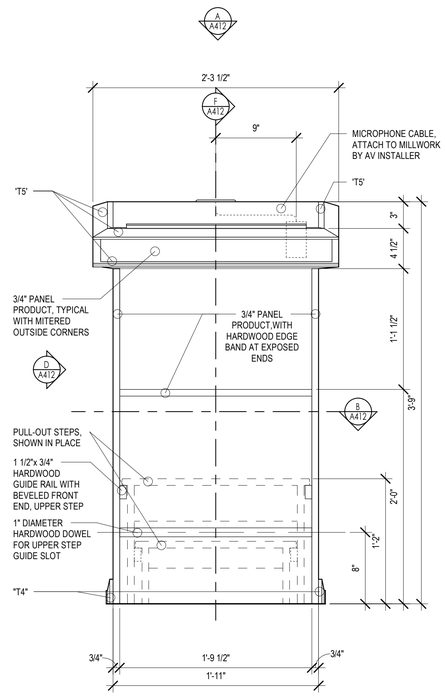

LECTERN REAR
1 1/2" = 1'-0"
E / A412

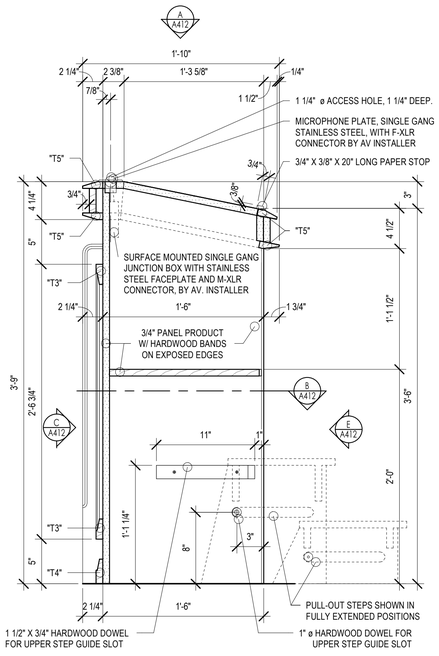

LECTERN SECTION
1 1/2" = 1'-0"
F / A412

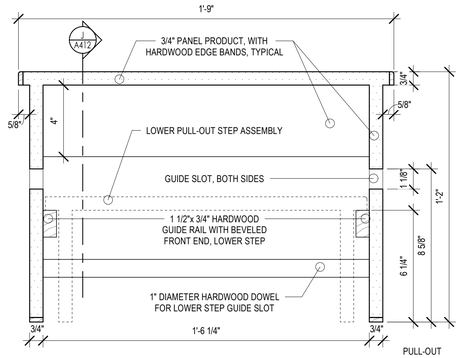

UPPER STEP SECTION
3" = 1'-0"
G / A412

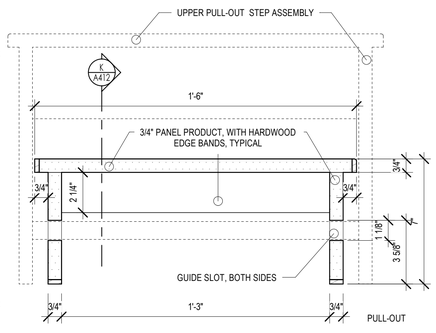

LOWER STEP SECTION
3" = 1'-0"
H / A412

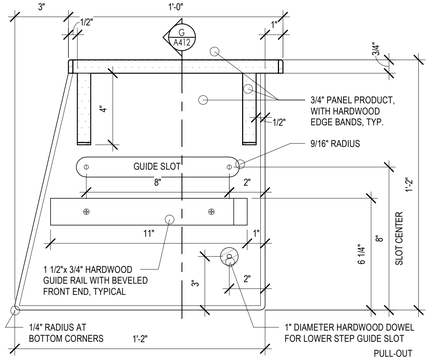

UPPER STEP SECTION
3" = 1'-0"
J / A412

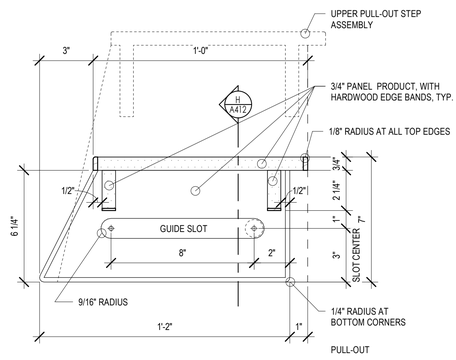

LOWER STEP SECTION
3" = 1'-0"
K / A412

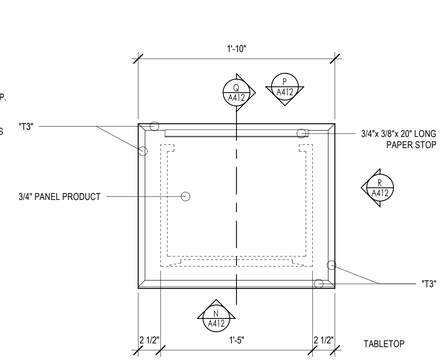

LECTERN TOP
1 1/2" = 1'-0"
L / A412

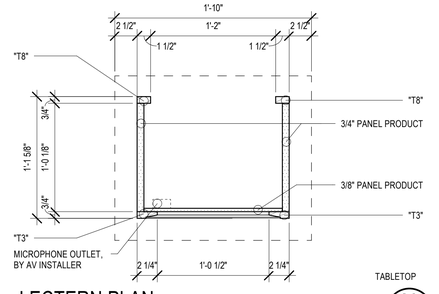

LECTERN PLAN
1 1/2" = 1'-0"
M / A412

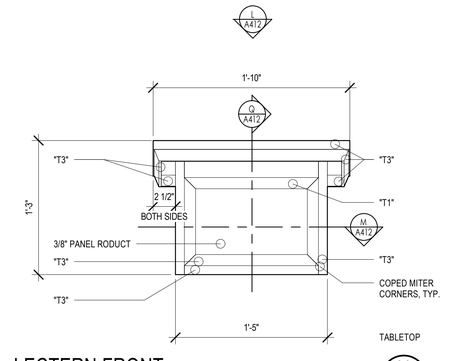

LECTERN FRONT
1 1/2" = 1'-0"
N / A412

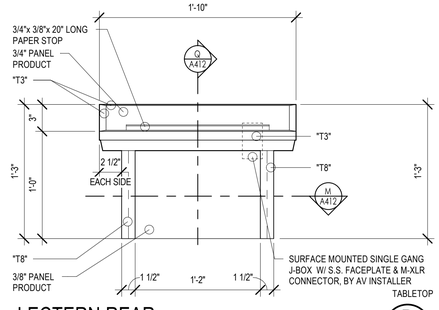

LECTERN REAR
1 1/2" = 1'-0"
P / A412

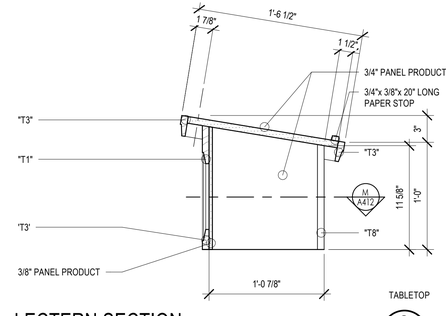

LECTERN SECTION
1 1/2" = 1'-0"
Q / A412

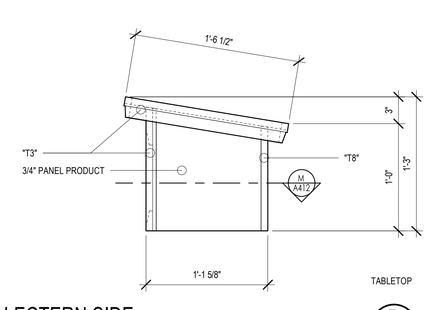

LECTERN SIDE
1 1/2" = 1'-0"
R / A412

bhd ARCHITECTS
www.bhdarchitects.com
Phone 801.571.0010
Fax 801.571.0303
Toll Free 888.571.0010
65 East Wadsworth Park Drive
Suite 205 Draper, Utah 84020

LICENSED ARCHITECT
Lafe Theadore Harris
15 Aug 2024
No. 8878-0301
STATE OF UTAH

THE CHURCH OF JESUS CHRIST OF LATTER-DAY SAINTS

Springwater 9
Vineyard UT Springwater Stake

Approx. 542 South Geneva Road
Vineyard, Utah 84059

Owner #: 502-2004
Plan Series: G300-MH-11
County Parcel: 39-228:0001
BHD #: 2346
Date: 15 Aug 2024

Drawing Issue and Revision Schedule

#	Date	Description

CHILDRENS LECTERN AND TABLETOP LECTERN CASEWORK

A412

8/15/2024 1:07:08 PM

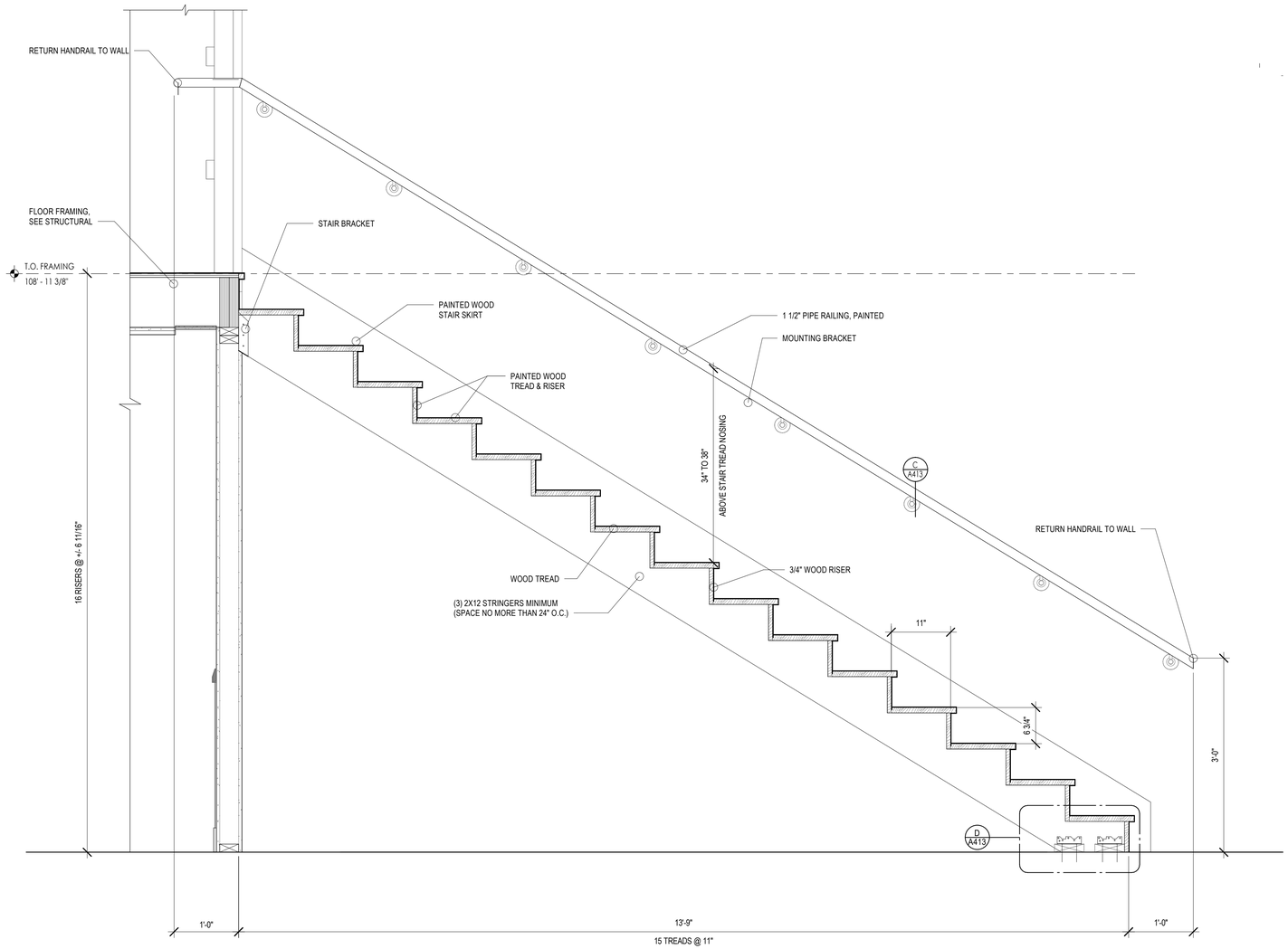

MEZZANINE STAIR SECTION

1" = 1'-0"

A413

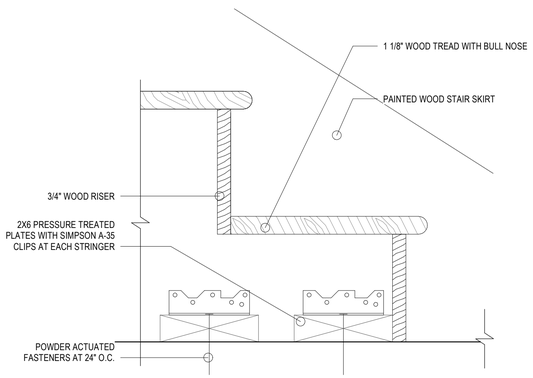

STAIR BASE @ CONCRETE FLOOR

3" = 1'-0"

D A413

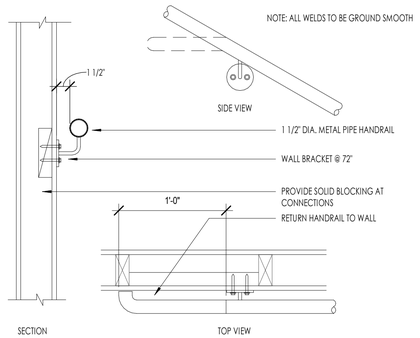

HANDRAIL - METAL PIPE SECTION

1 1/2" = 1'-0"

C A413

8/15/2024 1:07:09 PM

bhd ARCHITECTS
www.bhdarchitects.com
Phone 801.571.0010
Fax 801.571.0303
Toll Free 888.571.0010
65 East Wadsworth Park Drive
Suite 205 Draper, Utah 84020

LICENSED ARCHITECT
Lafe Theadore Harris
15 Aug 2024
No. 8878-0301
STATE OF UTAH

THE CHURCH OF JESUS CHRIST OF LATTER-DAY SAINTS

Springwater 9
Vineyard UT Springwater Stake

Approx. 542 South Geneva Road
Vineyard, Utah 84059

BHD #: 2346
County Parcel: 39-228:0001
Plan Series: G300-MH-11
Owner #: 502-2004
Date: 15 Aug 2024

Drawing Issue and Revision Schedule

#	Date	Description

STAIR SECTIONS

A413

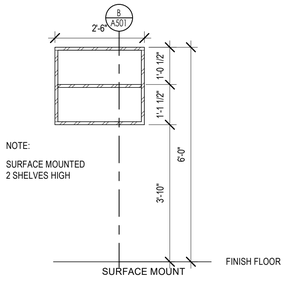

SURFACE MOUNT HYMN BOOK STORAGE
A501
1/2" = 1'-0"

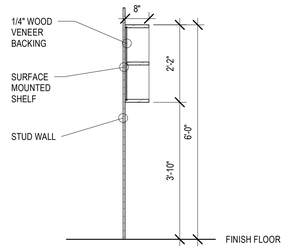

SURFACE MOUNT HYMN BOOK STORAGE SECTION
B
A501
1/2" = 1'-0"

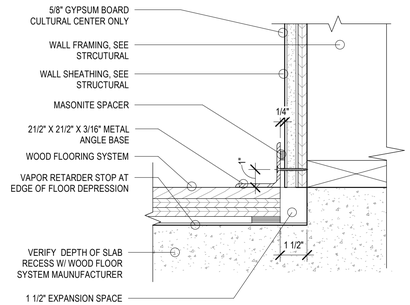

METAL BASE DETAIL
C
A501
3" = 1'-0"

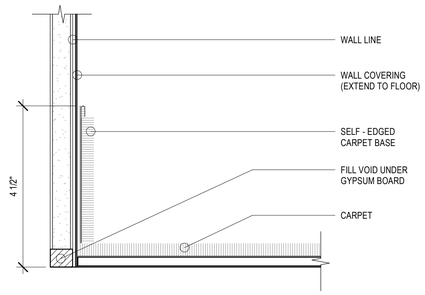

CARPET BASE DETAIL
D
A501
6" = 1'-0"

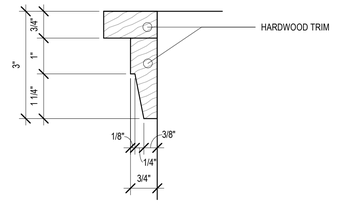

WOOD TRIM DETAIL
E
A501
6" = 1'-0"

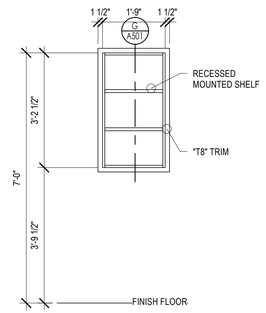

HYMN CABINET - RECESSED
F
A501
1/2" = 1'-0"

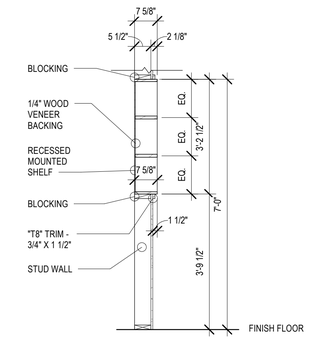

RECESSED MOUNT HYMN BOOK
G
A501
1/2" = 1'-0"

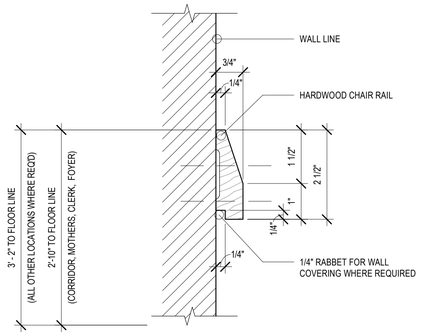

CHAIR RAIL DETAIL
H
A501
6" = 1'-0"

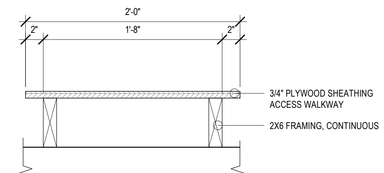

ACCESS WALKWAY DETAIL
J
A501
1 1/2" = 1'-0"

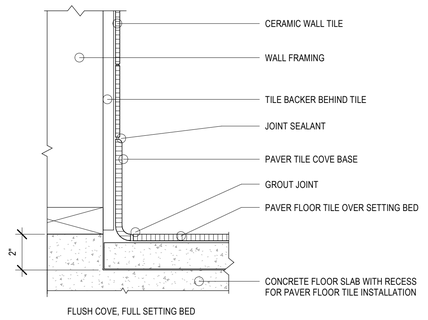

PAVER TILE BASE
K
A501
3" = 1'-0"

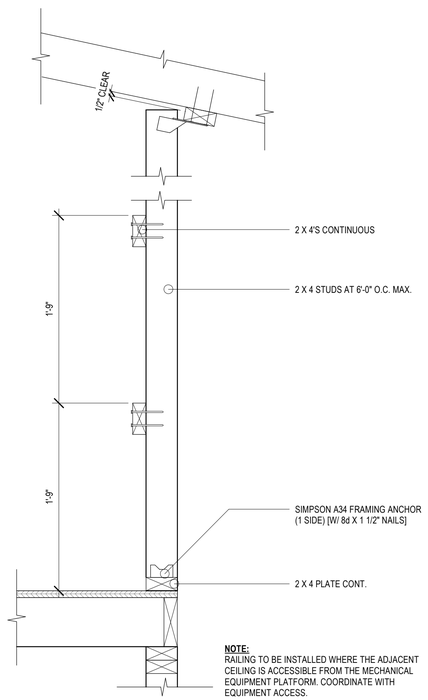

ATTIC RAILING DETAIL
L
A501
1 1/2" = 1'-0"

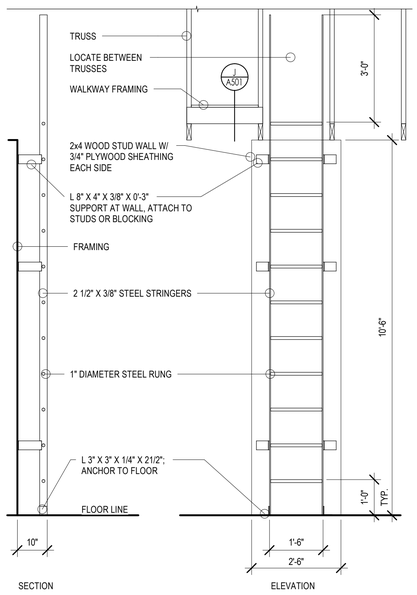

LADDER DETAIL
M
A501
1/2" = 1'-0"

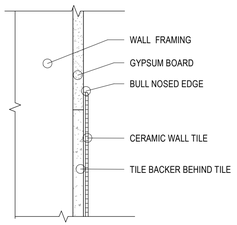

WALL TILE EDGE
N
A501
3" = 1'-0"

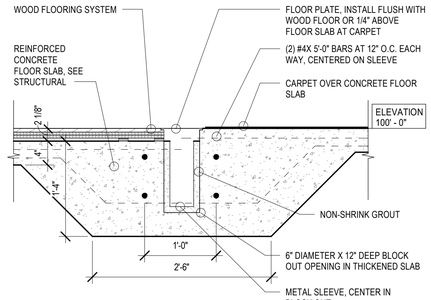

VOLLEYBALL POST SLEEVE
P
A501
1" = 1'-0"

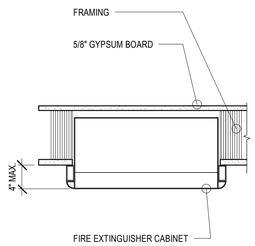

FIRE EXTINGUISHER CABINET
Q
A501
1 1/2" = 1'-0"

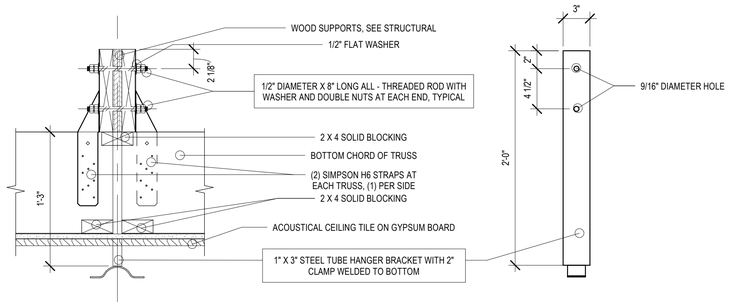

NOTE: FRAMED TEXT DENOTES ITEMS FURNISHED BY OTHERS AND INSTALLED BY CONTRACTOR

BASKETBALL STANDARD MOUNTING
R
A501
1 1/2" = 1'-0"

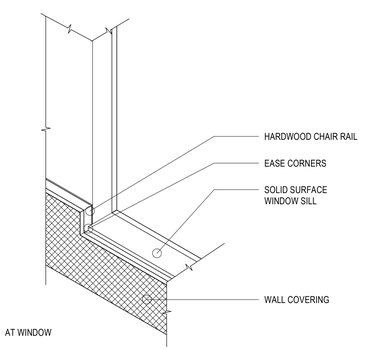

CHAIR RAIL
S
A501
3/4" = 1'-0"

bhd ARCHITECTS
www.bhdarchitects.com
Phone 801.571.0010
Fax 801.571.0303
Toll Free 888.571.0010
65 East Wadsworth Park Drive
Suite 205 Draper, Utah 84020

LICENSED ARCHITECT
Lafe Theadore Harris
15 Aug 2024
(6278878-0301)
STATE OF UTAH

THE CHURCH OF
JESUS CHRIST
OF LATTER-DAY SAINTS

Springwater 9
Vineyard UT Springwater Stake

Approx. 542 South Geneva Road
Vineyard, Utah 84059

Owner #: 502-2004
Plan Series: G300-MH-11
County Parcel: 39-228-0001
BHD #: 2346
Date: 15 Aug 2024

Drawing Issue and Revision Schedule

#	Date	Description

ARCHITECTURE DETAILS

A501

8/15/2024 1:07:11 PM

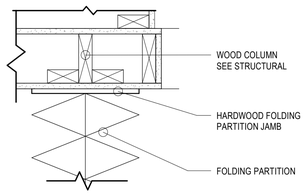

FOLDING PARTITION - JAMB DETAIL (A)
1 1/2" = 1'-0"
A502

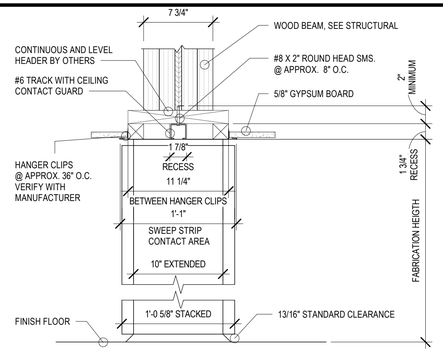

FOLDING PARTITION - HEAD DETAIL (B)
1 1/2" = 1'-0"
A502

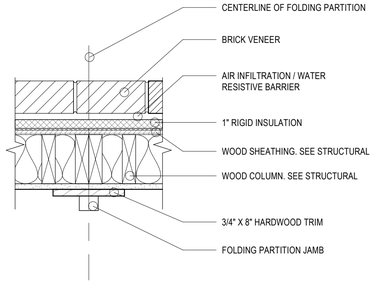

FOLDING PARTITION - JAMB @ EXTERIOR (C)
1 1/2" = 1'-0"
A502

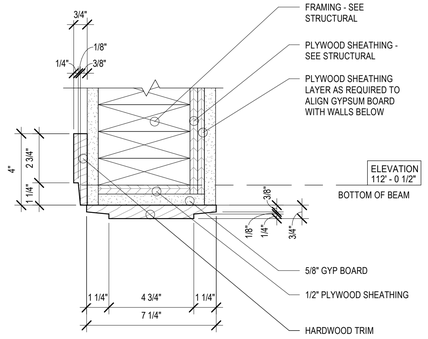

TRIM AT PLATFORM HEADER (G)
3" = 1'-0"
A502

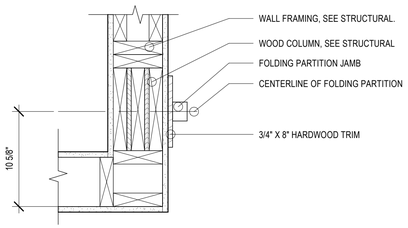

FOLDING PARTITION - JAMB @ CORNER (H)
1 1/2" = 1'-0"
A502

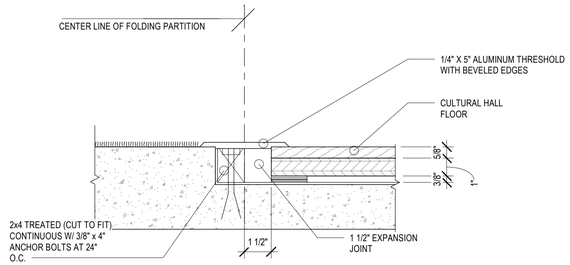

THRESHOLD - FOLDING PARTITION (J)
3" = 1'-0"
A502

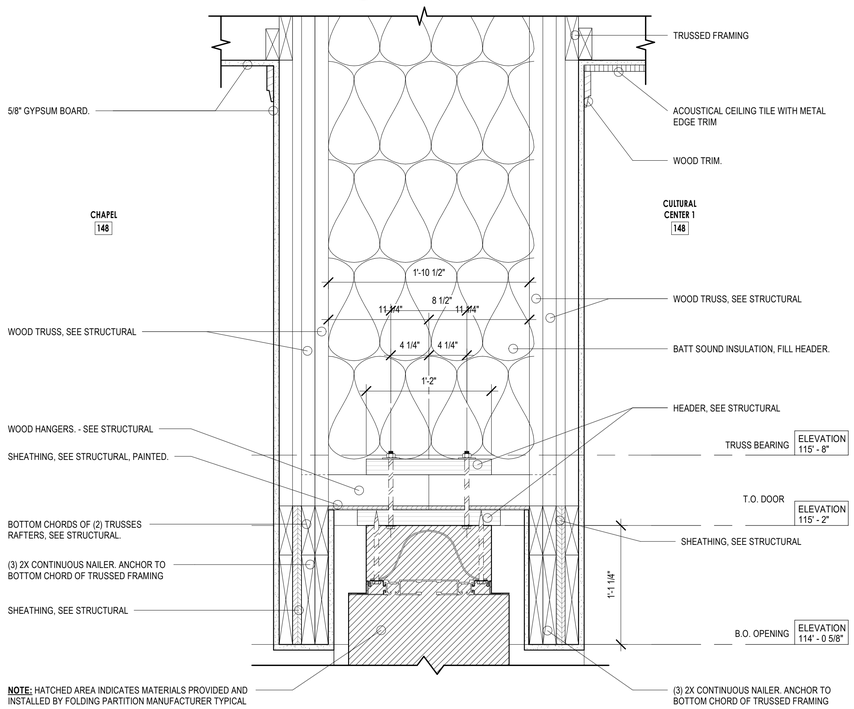

OVERHEAD FOLDING PARTITION - HEAD (F)
1 1/2" = 1'-0"
A502

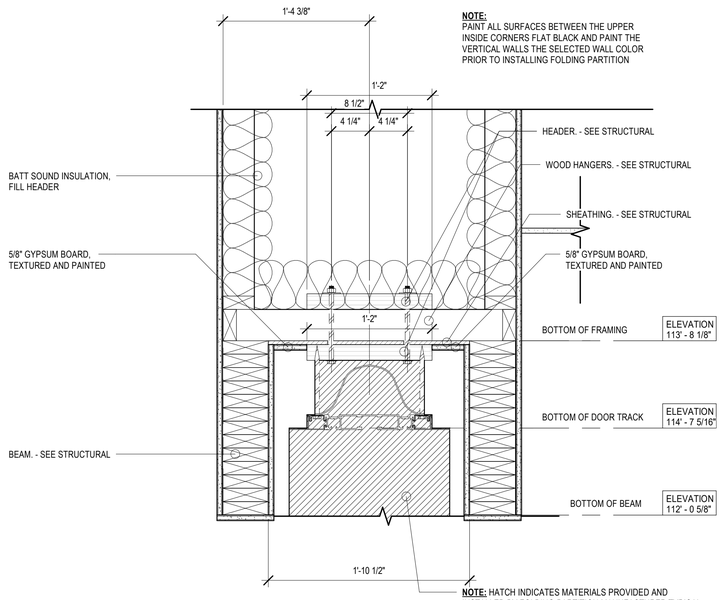

FOLDING PARTITION/CURTAIN - HEAD (E)
1 1/2" = 1'-0"
A502

bhd ARCHITECTS
www.bhdarchitects.com
Phone 801.571.0010
Fax 801.571.0303
Toll Free 888.571.0010
65 East Wadsworth Park Drive
Suite 205 Draper, Utah 84020

LICENSED ARCHITECT
Lafe Theadore Harris
15 Aug 2024
No. 8878-0301
STATE OF UTAH

THE CHURCH OF
JESUS CHRIST
OF LATTER-DAY SAINTS

Springwater 9
Vineyard UT Springwater Stake

Approx. 542 South Geneva Road
Vineyard, Utah 84059

Owner #: 502.2004
Plan Series: G300-MH-11
County Parcel: 39-228:0001
BHD #: 2346
Date: 15 Aug 2024

Drawing Issue and Revision Schedule

#	Date	Description

ARCHITECTURE DETAILS

A502

8/15/2024 1:31:14 PM

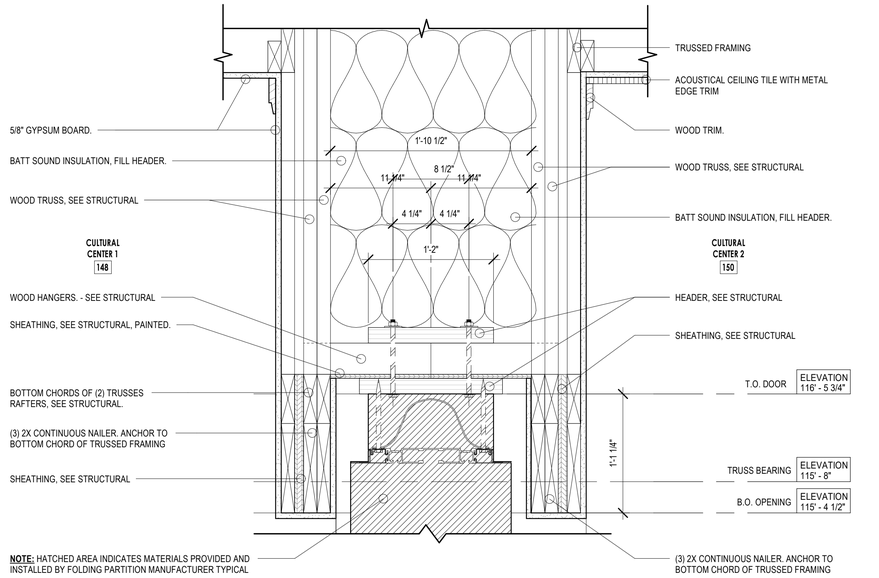

PANEL FOLDING PARTITION - HEAD

1 1/2" = 1'-0"

A503

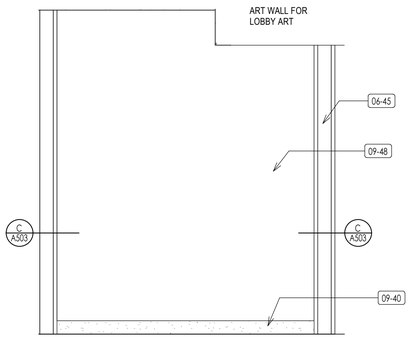

ART WALL

1/2" = 1'-0"

B A503

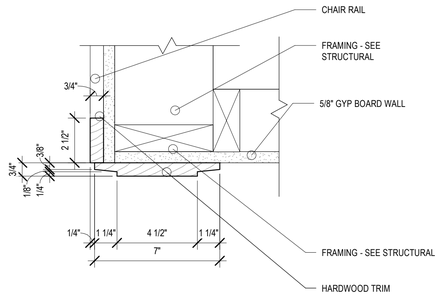

TRIM AT ART WALL

3" = 1'-0"

C A503

NOTE: COORDINATE POWER AND MOUNTING TYPE WITH PROJECT MANGER

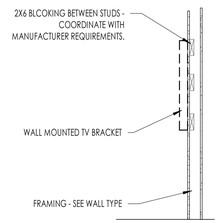

WALL MOUNTED TV DETAIL

1/2" = 1'-0"

D A503

bhd ARCHITECTS
www.bhdarchitects.com
Phone 801.571.0010
Fax 801.571.0303
Toll Free 888.571.0010
65 East Wadsworth Park Drive
Suite 205 Draper, Utah 84020

LICENSED ARCHITECT
Lafe Theadore Harris
15 Aug 2024
#6878-0301
STATE OF UTAH

THE CHURCH OF JESUS CHRIST OF LATTER-DAY SAINTS

Springwater 9
Vineyard UT Springwater Stake

Approx. 542 South Geneva Road
Vineyard, Utah 84059

Owner #: 502.2004
Plan Series: G300-MH-11
County Parcel: 39:228:0001
BHD #: 2346
Date: 15 Aug 2024

Drawing Issue and Revision Schedule

#	Date	Description

ARCHITECTURE DETAILS

A503

8/15/2024 1:31:14 PM

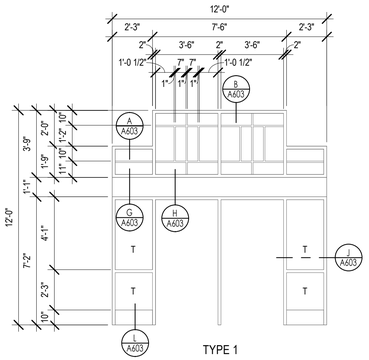

TYPE 1

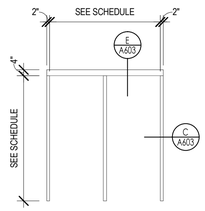

TYPE 2

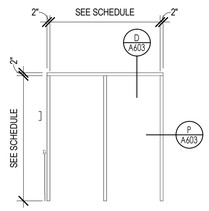

TYPE 3

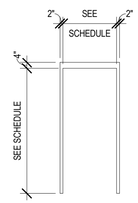

TYPE 4

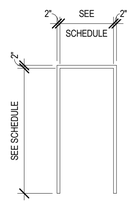

TYPE 5

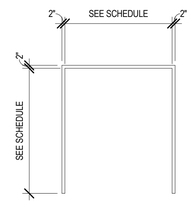

TYPE 6

FRAME TYPES

1/4" = 1'-0"

A601

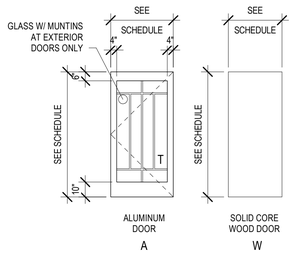

DOOR TYPES

1/4" = 1'-0"

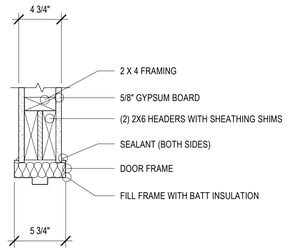

DOOR HEAD - 2X4 WALL

1 1/2" = 1'-0"

B A601

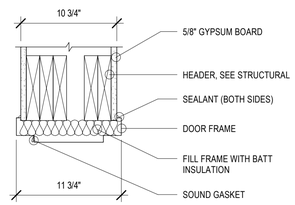

DOOR HEAD - SOUND RATED WALL

1 1/2" = 1'-0"

C A601

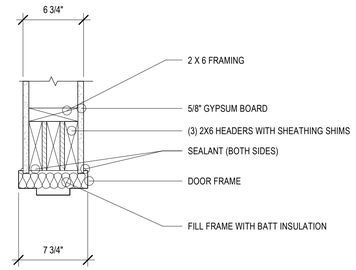

DOOR HEAD - 2X6 WALL

1 1/2" = 1'-0"

E A601

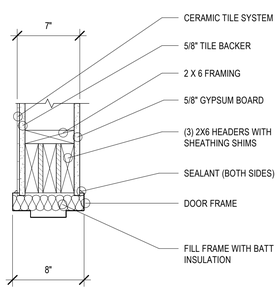

DOOR HEAD - 2X6 WALL - CERAMIC TILE

1 1/2" = 1'-0"

F A601

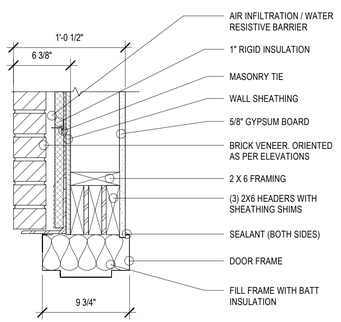

DOOR HEAD @ BRICK

1 1/2" = 1'-0"

G A601

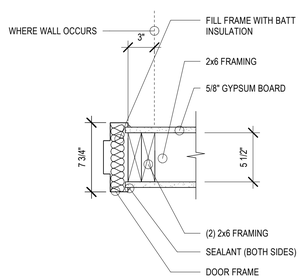

DOOR JAMB - 2X6 WALL

1 1/2" = 1'-0"

H A601

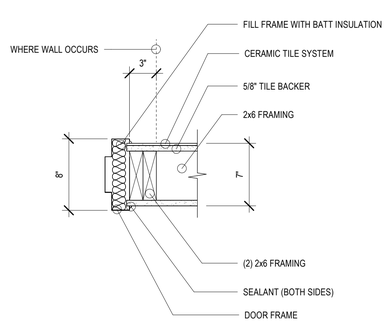

DOOR JAMB - 2X6 WALL - CERAMIC TILE

1 1/2" = 1'-0"

J A601

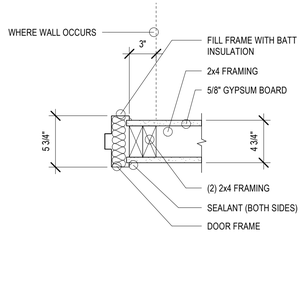

DOOR JAMB - 2X4 WALL

1 1/2" = 1'-0"

K A601

DOOR SCHEDULE

MARK	ROOM NUMBER	TYPE	DOOR SINGLE/PAIR	DOOR WIDTH	DOOR HEIGHT	DOOR THICKNESS	FRAME TYP	FRAME DETAIL HEAD	FRAME DETAIL JAMB	FRAME DETAIL THRESHOLD	HARDWARE GROUP	KEYING	REMARKS
101A	101	W	S	3' - 0"	7' - 0"	1 3/4"	5	C/A601	L/A604	K/A604	26	AA2	
102A	102	W	S	3' - 0"	7' - 0"	1 3/4"	5	E/A601	H/A601	K/A604	26	XAA6	
103A	103	W	S	3' - 0"	7' - 0"	1 3/4"	5	E/A601	H/A601	K/A604	26	XAA7	
105A	105	W	S	3' - 0"	7' - 0"	1 3/4"	5	C/A601	L/A604	K/A604	26	AA3	
106A	106	G	S	3' - 0"	7' - 0"	1 3/4"	5	B/A601	K/A601	K/A604	20		
107A	107	A	P	3' - 6"	7' - 0"	1 3/4"	1	G/A603	J/A603	G/A604	ST1		
107B	107	A	P	3' - 6"	7' - 0"	1 3/4"	1	H/A603	P/A603	-	ST3		
109A	109	G	S	3' - 0"	7' - 0"	1 3/4"	5	E/A601	H/A601	-	20		
110A	110	W	S	3' - 0"	7' - 0"	1 3/4"	5	B/A601	K/A601	J/A604	20A		
111A	111	G	S	3' - 0"	7' - 0"	1 3/4"	5	B/A601	K/A601	-	20		
112A	112	G	S	3' - 0"	7' - 0"	1 3/4"	5	B/A601	K/A601	-	20		
113A	113	G	S	3' - 0"	7' - 0"	1 3/4"	5	B/A601	K/A601	-	20		
114A	114	G	S	3' - 0"	7' - 0"	1 3/4"	5	B/A601	K/A601	-	20		
116A	116	G	S	3' - 0"	7' - 0"	1 3/4"	5	B/A601	K/A601	-	20		
117A	117	G	S	3' - 0"	7' - 0"	1 3/4"	5	B/A601	K/A601	-	20		
118A	118	G	S	3' - 0"	7' - 0"	1 3/4"	5	B/A601	K/A601	-	30		
118B	118	G	S	3' - 0"	7' - 0"	1 3/4"	5	B/A601	K/A601	-	30		
119A	119	A	P	3' - 0"	7' - 0"	1 3/4"	2	E/A603	C/A603	G/A604	ST1		
119B	119	A	P	3' - 0"	7' - 0"	1 3/4"	3	D/A603	K/A603	-	ST3		
120A	120	G	S	3' - 0"	7' - 0"	1 3/4"	5	B/A601	K/A601	-	20		
121A	121	W	S	3' - 0"	7' - 0"	1 3/4"	5	B/A601	K/A601	-	36	XAA14	
122A	122	W	S	3' - 0"	7' - 0"	1 3/4"	5	B/A601	K/A601	J/A604	32		
124A	124	G	S	3' - 0"	7' - 0"	1 3/4"	5	B/A601	K/A601	-	20		
125A	125	A	P	3' - 0"	7' - 0"	1 3/4"	2	E/A603	C/A603	G/A604	ST1		
125B	125	A	P	3' - 0"	7' - 0"	1 3/4"	3	D/A603	K/A603	-	ST3		
126A	126	G	S	3' - 0"	7' - 0"	1 3/4"	5	B/A601	K/A601	-	30		
126B	126	G	S	3' - 6"	7' - 0"	1 3/4"	5	B/A601	K/A601	-	30		
127A	127	G	S	3' - 0"	7' - 0"	1 3/4"	5	B/A601	K/A601	-	20		
128A	128	M	S	3' - 0"	7' - 0"	1 3/4"	4	G/A601	F/A604	G/A604	3	XAA15	
129A	129	M	S	3' - 0"	7' - 0"	1 3/4"	4	G/A601	F/A604	G/A604	3	XAA15	
130A	130	G	S	3' - 0"	7' - 0"	1 3/4"	5	E/A601	H/A601	J/A604	20A		
130B	130	A	S	3' - 0"	7' - 0"	1 3/4"	4	N/A603	C/A603 SIM	G/A604	ST2		
130C	130	W	P	3' - 0"	7' - 0"	1 3/4"	6	E/A601	H/A601	J/A604	51A		
130E			D	45' - 1"	16' - 5 3/4"								-
130R			D	49' - 5 5/8"	13' - 1 7/8"								-
132A	132	G	S	3' - 0"	7' - 0"	1 3/4"	5	B/A601	K/A601	-	20		
132B	132	P	S	20' - 0"	8' - 0"		-	B/A502	A/A502 C/A502	-	-		FOLDING PARTITION
133A	133	G	S	3' - 0"	7' - 0"	1 3/4"	5	B/A601	K/A601	-	20		
133B	133	P	S	20' - 0"	8' - 0"		-	B/A502	A/A502 C/A502	-	-		FOLDING PARTITION
134A	134	G	S	3' - 0"	7' - 0"	1 3/4"	5	B/A601	K/A601	-	20		
135A	135	W	S	3' - 0"	7' - 0"	1 3/4"	5	B/A601	K/A601	K/A604	28A		
136A	136	W	S	3' - 0"	7' - 0"	1 3/4"	5	B/A601	K/A601	-	23	XAA16	
138A	138	A	P	3' - 6"	7' - 0"	1 3/4"	1	G/A603	J/A603	G/A604	ST1A		AUTOMATIC DOOR OPENER
138B	138	A	P	3' - 6"	7' - 0"	1 3/4"	1	H/A603	P/A603	-	ST3A		AUTOMATIC DOOR OPENER
139A	139	G	S	3' - 0"	7' - 0"	1 3/4"	5	B/A601	K/A601	J/A604	20		
140A	140	W	S	3' - 0"	7' - 0"	1 3/4"	5	C/A601	L/A604	K/A604	26	AA4	
142A	142	W	S	3' - 0"	7' - 0"	1 3/4"	5	C/A601	L/A604	K/A604	26	AA5	
143A	143	W	S	3' - 0"	7' - 0"	1 3/4"	5	E/A601	H/A601	K/A604	26	XAA9	
144A	144	W	S	3' - 0"	7' - 0"	1 3/4"	5	E/A601	H/A601	K/A604	26	XAA8	
148A	148	W	P	3' - 0"	7' - 0"	1 3/4"	6	E/A601	H/A601	-	52		
148C	148	W	P	3' - 0"	7' - 0"	1 3/4"	6	E/A601	H/A601	-	52		
149A	149	W	S	3' - 0"	7' - 0"	1 3/4"	5	E/A601	H/A601	M/A604	30		
149B	149	W	P	3' - 0"	7' - 0"	1 3/4"	5	E/A601	H/A601	M/A604	30		
149C	149	W	P	3' - 0"	7' - 0"	1 3/4"	5	E/A601	H/A601	M/A604	30		
149D	149	W	S	3' - 0"	7' - 0"	1 3/4"	5	E/A601	H/A601	M/A604	30		
150A	150	W	S	3' - 0"	7' - 0"	1 3/4"	5	E/A601	H/A601	M/A604	30		
150B	150	W	S	3' - 0"	7' - 0"	1 3/4"	5	E/A601	H/A601	M/A604	30		
151A	151	W	S	3' - 0"	7' - 0"	1 3/4"	5	E/A601	H/A601	M/A604	23	XAA17	
152A	152	W	P	3' - 6"	7' - 0"	1 3/4"	6	B/A601	K/A601	M/A604	51A		
153A	153	W	S	3' - 0"	7' - 0"	1 3/4"	5	E/A601	H/A601	-	20		
154A	154	W	S	3' - 0"	7' - 0"	1 3/4"	5	E/A601	H/A601		28		
154B	154	W	S	3' - 0"	7' - 0"	1 3/4"	5	E/A601	H/A601	M/A604	30		
155A	155	W	S	3' - 0"	7' - 0"	1 3/4"	5	E/A601	H/A601	H/A604	28		
156A	156	W	S	3' - 0"	7' - 0"	1 3/4"	5	E/A601	H/A601	H/A604	28		

NOTE: SEE STORAGE SHED FOR STORAGE SHED DOORS

bhd ARCHITECTS
www.bhdarchitects.com
Phone 801.571.0010
Fax 801.571.0303
Toll Free 888.571.0010
65 East Wadsworth Park Drive
Suite 205 Draper, Utah 84020

LICENSED ARCHITECT
Lafe Theadore Harris
15 Aug 2024
(c) 8878-0301
STATE OF UTAH

THE CHURCH OF JESUS CHRIST OF LATTER-DAY SAINTS

Springwater 9
Vineyard UT Springwater Stake

Approx. 542 South Geneva Road
Vineyard, Utah 84059

BHD #: 2346
County Parcel: 39-228:0001
Plan Series: G300-MH-11
Owner #: 502-2004
Date: 15 Aug 2024

Drawing Issue and Revision Schedule

#	Date	Description

DOOR SCHEDULE & DETAILS

A601

8/15/2024 1:07:13 PM

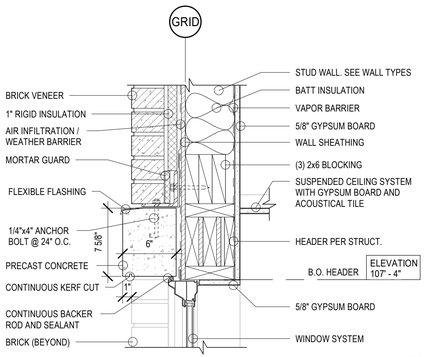

WINDOW HEAD @ 2x6 STUD — A602

1 1/2" = 1'-0"

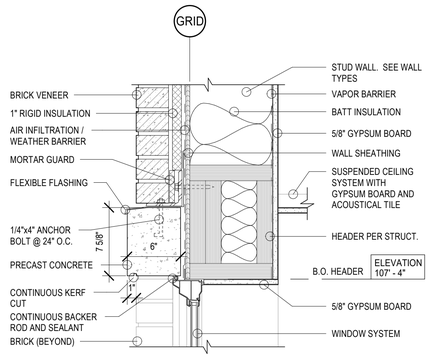

WINDOW HEAD @ 2x10 STUD — B A602

1 1/2" = 1'-0"

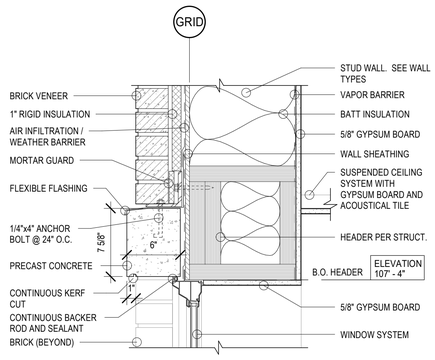

WINDOW HEAD @ 2X12 STUD — C A602

1 1/2" = 1'-0"

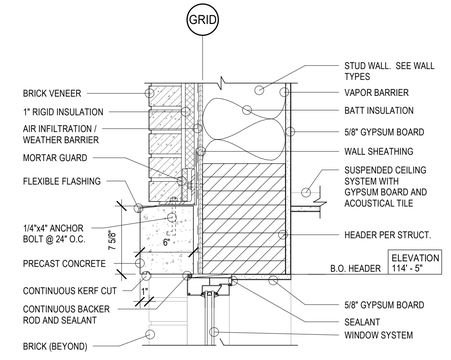

WINDOW HEAD - STOREFRONT — D A602

1 1/2" = 1'-0"

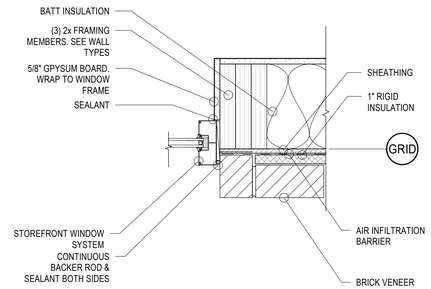

WINDOW JAMB - STOREFRONT — E A602

1 1/2" = 1'-0"

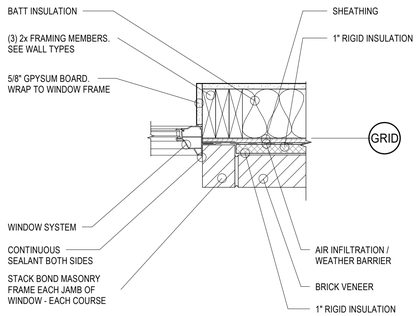

WINDOW JAMB - 2X6 STUD — F A602

1 1/2" = 1'-0"

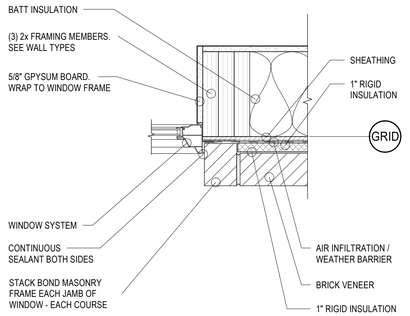

WINDOW JAMB - 2X10 STUD — G A602

1 1/2" = 1'-0"

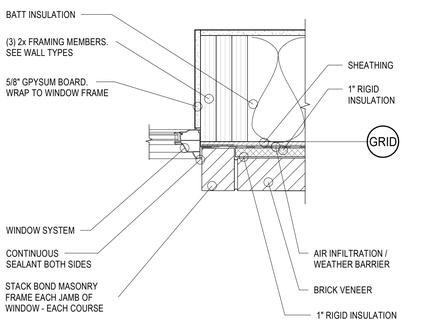

WINDOW JAMB - 2X12 STUD — H A602

1 1/2" = 1'-0"

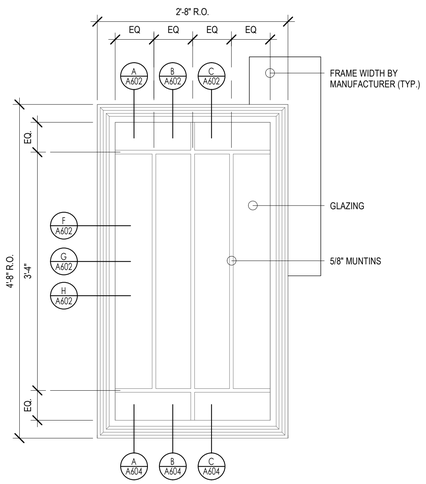

WINDOW TYPE A — J A602

1" = 1'-0"

WINDOW TYPE B — K A602

3/4" = 1'-0"

WINDOW TYPE C — L A602

3/4" = 1'-0"

bhd ARCHITECTS
www.bhdarchitects.com
Phone 801.571.0010
Fax 801.571.0303
Toll Free 888.571.0010
65 East Wadsworth Park Drive
Suite 205 Draper, Utah 84020

LICENSED ARCHITECT — Lafe Theadore Harris — 15 Aug 2024 — 8678-0301 — STATE OF UTAH

THE CHURCH OF JESUS CHRIST OF LATTER-DAY SAINTS

Springwater 9
Vineyard UT Springwater Stake

Approx. 542 South Geneva Road
Vineyard, Utah 84059

BHD #: 2346
County Parcel: 39:228:0001
Plan Series: G300-MH-11
Owner #: 502-2004
Date: 15 Aug 2024

Drawing Issue and Revision Schedule

#	Date	Description

WINDOW DETAILS

A602

8/15/2024 1:07:17 PM

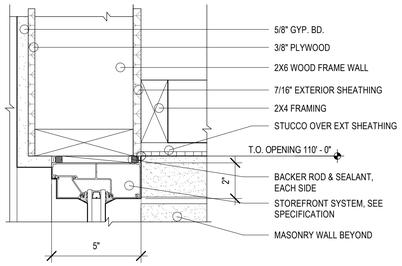

STOREFRONT HEAD DETAIL (A)
3" = 1'-0"
A603

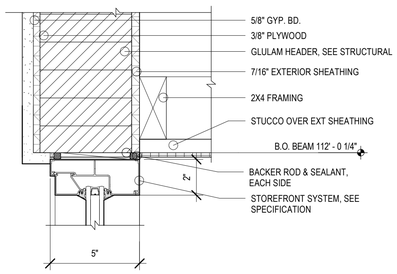

STOREFRONT HEAD @ BEAM (B)
3" = 1'-0"
A603

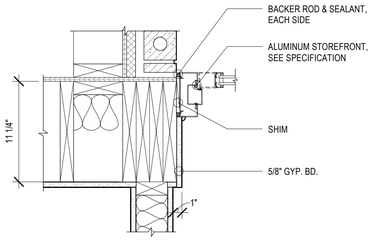

STOREFRONT - EXT DOOR JAMB (C)
1 1/2" = 1'-0"
A603

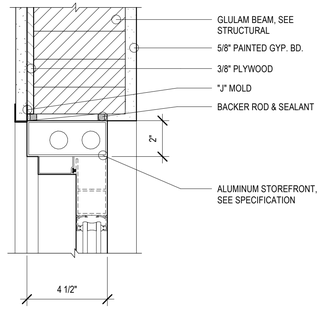

STOREFRONT - DOOR - INTERIOR (D)
3" = 1'-0"
A603

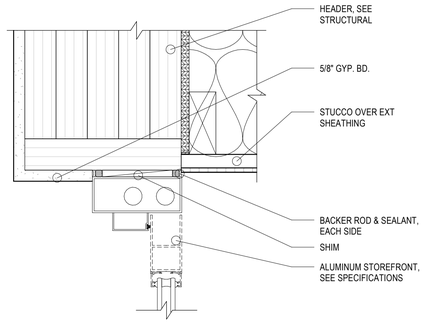

STOREFRONT - EXT - DOOR HEADER (E)
3" = 1'-0"
A603

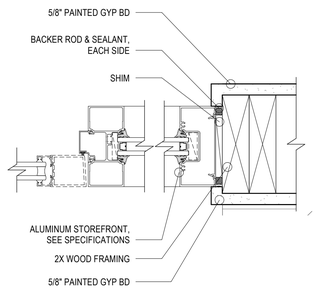

STOREFRONT - INT JAMB (F)
3" = 1'-0"
A603

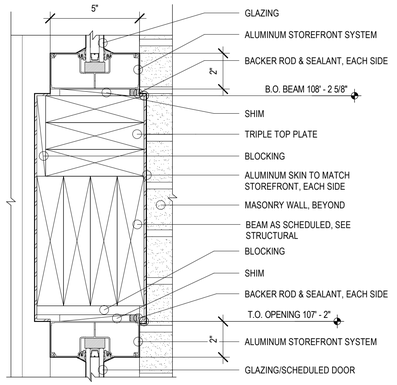

STOREFRONT @ BEAM DETAIL (G)
3" = 1'-0"
A603

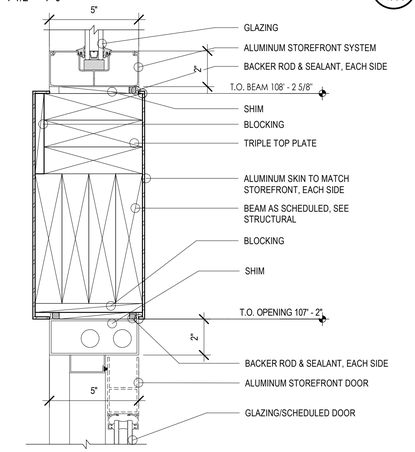

STOREFRONT DOOR @ BEAM (H)
3" = 1'-0"
A603

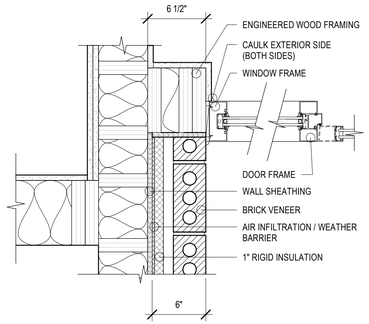

STOREFRONT - EXT - JAMB @ BRICK (J)
1 1/2" = 1'-0"
A603

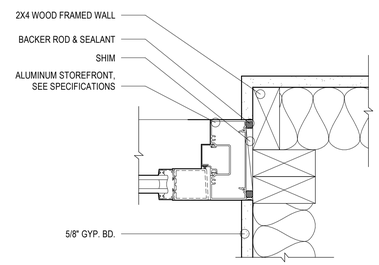

STOREFRONT - INT- DOOR JAMB (K)
3" = 1'-0"
A603

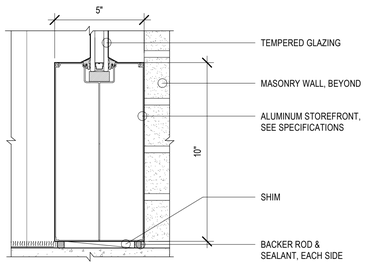

STOREFRONT SILL DETAIL (L)
3" = 1'-0"
A603

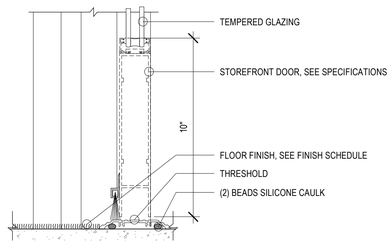

STOREFRONT THRESHOLD DETAIL (M)
3" = 1'-0"
A603

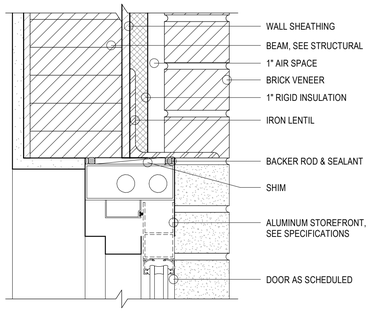

STOREFRONT DOOR @ BRICK (N)
3" = 1'-0"
A603

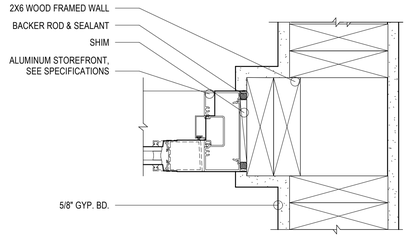

STOREFRONT - INT- DOOR JAMB ENTRY (P)
3" = 1'-0"
A603

bhd ARCHITECTS
www.bhdarchitects.com
Phone 801.571.0010
Fax 801.571.0303
Toll Free 888.571.0010
65 East Wadsworth Park Drive
Suite 205 Draper, Utah 84020

LICENSED ARCHITECT
Lafe Theadore Harris
15 Aug 2024
(Sig.8878-0301)
STATE OF UTAH

THE CHURCH OF JESUS CHRIST OF LATTER-DAY SAINTS

Springwater 9
Vineyard UT Springwater Stake

Approx. 540 South Geneva Road
Vineyard, Utah 84059

BHD #: 2346
Date: 15 Aug 2024
County Parcel: 39-228:0001
Plan Series: G300-MH-11
Owner #: 502-2004

Drawing Issue and Revision Schedule

#	Date	Description

STOREFRONT DETAILS

A603

8/15/2024 1:07:19 PM

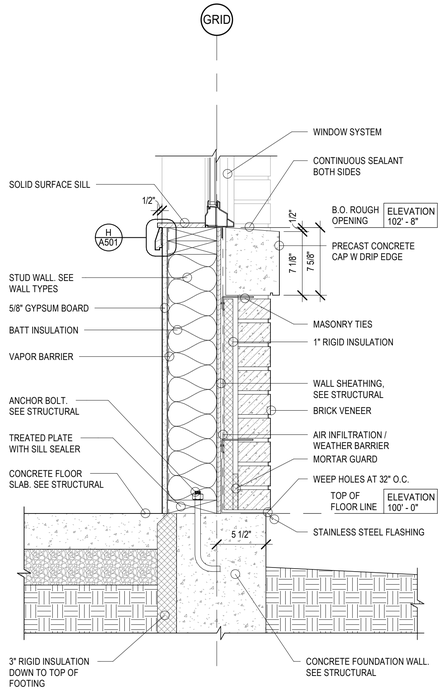

WINDOW SILL - 2X6 STUD

1 1/2" = 1'-0"

A604

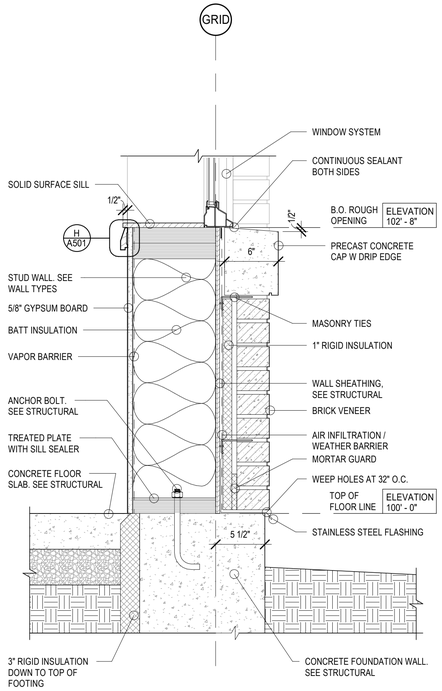

WINDOW SILL - 9 1/2 SCL

1 1/2" = 1'-0"

B

A604

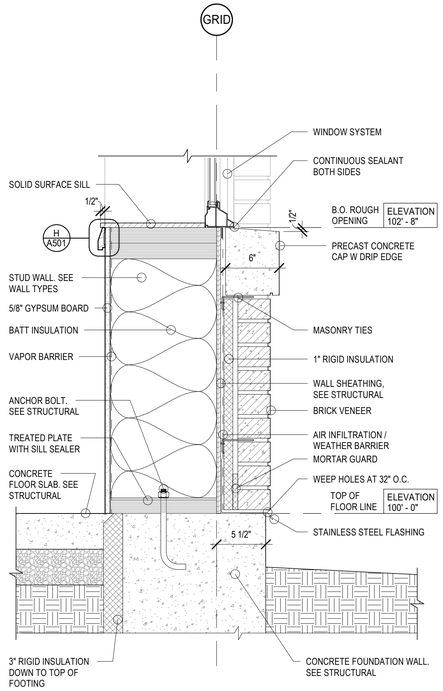

WINDOW SILL - 11 7/8" SCL

1 1/2" = 1'-0"

C

A604

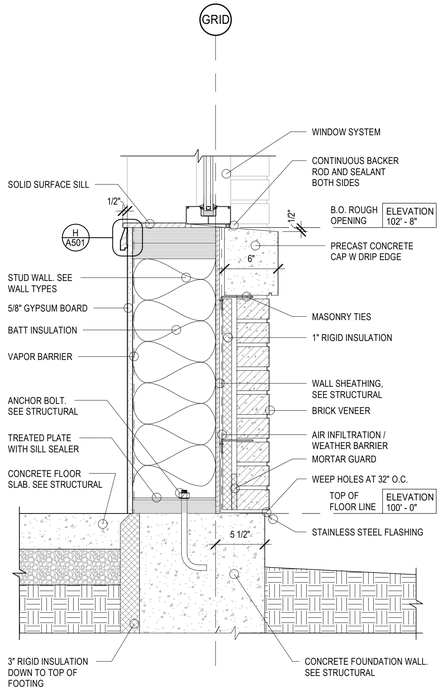

WINDOW SILL - STOREFRONT

1 1/2" = 1'-0"

D

A604

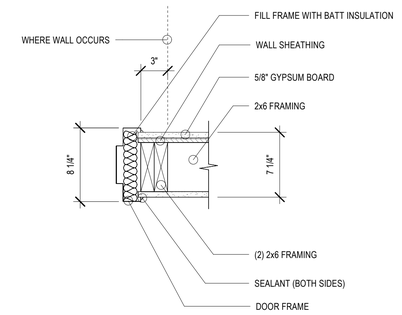

DOOR JAMB - 2X6 SHEAR WALL

1 1/2" = 1'-0"

E

A604

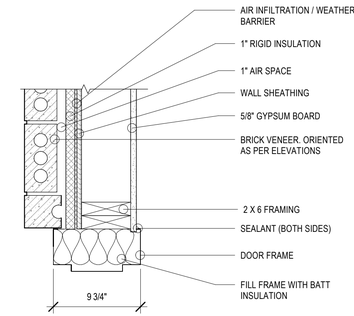

DOOR JAMB @ BRICK

1 1/2" = 1'-0"

F

A604

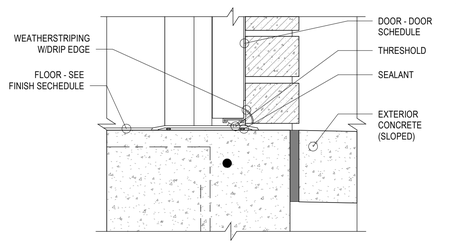

THRESHOLD @ EXTERIOR DOOR

3" = 1'-0"

G

A604

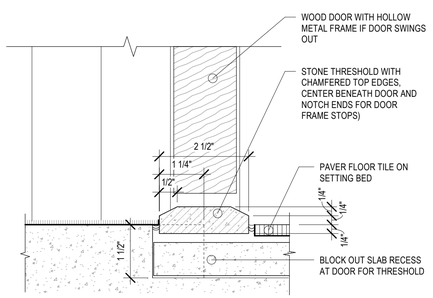

THRESHOLD DETAIL - STONE RECESSED

6" = 1'-0"

H

A604

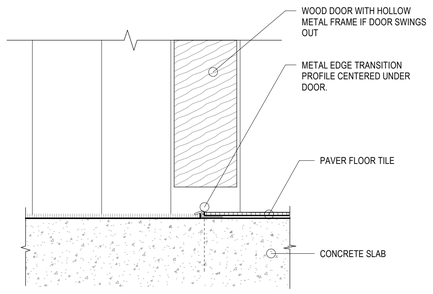

THRESHOLD DETAIL - THIN SET TILE

6" = 1'-0"

J

A604

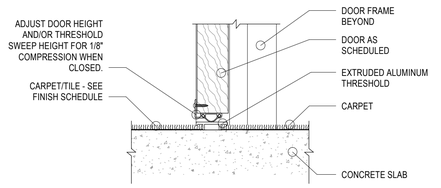

THRESHOLD - SOUND CONTROL

3" = 1'-0"

K

A604

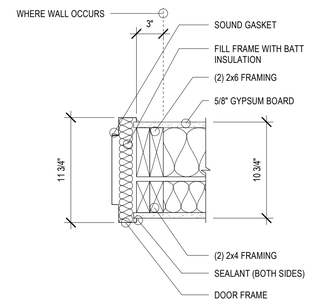

DOOR JAMB - SOUND RATED WALL

1 1/2" = 1'-0"

L

A604

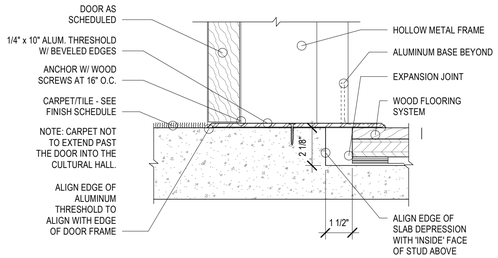

THRESHOLD @ FLOOR TRANSITION

3" = 1'-0"

M

A604

8/15/2024 1:07:21 PM

bhd ARCHITECTS
www.bhdarchitects.com
Phone 801.571.0010
Fax 801.571.0303
Toll Free 888.571.0010
65 East Wadsworth Park Drive
Suite 205 Draper, Utah 84020

LICENSED ARCHITECT
Lafe Theadore Harris
15 Aug 2024
#5-8878-0301
STATE OF UTAH

THE CHURCH OF JESUS CHRIST OF LATTER-DAY SAINTS

Springwater 9
Vineyard UT Springwater Stake

Approx. 542 South Geneva Road
Vineyard, Utah 84059

Owner #: 502-2004
Plan Series: G300-MH-11
County Parcel: 39-228-0001
BHD #: 2346
Date: 15 Aug 2024

Drawing Issue and Revision Schedule

#	Date	Description

DOOR AND WINDOW DETAILS

A604

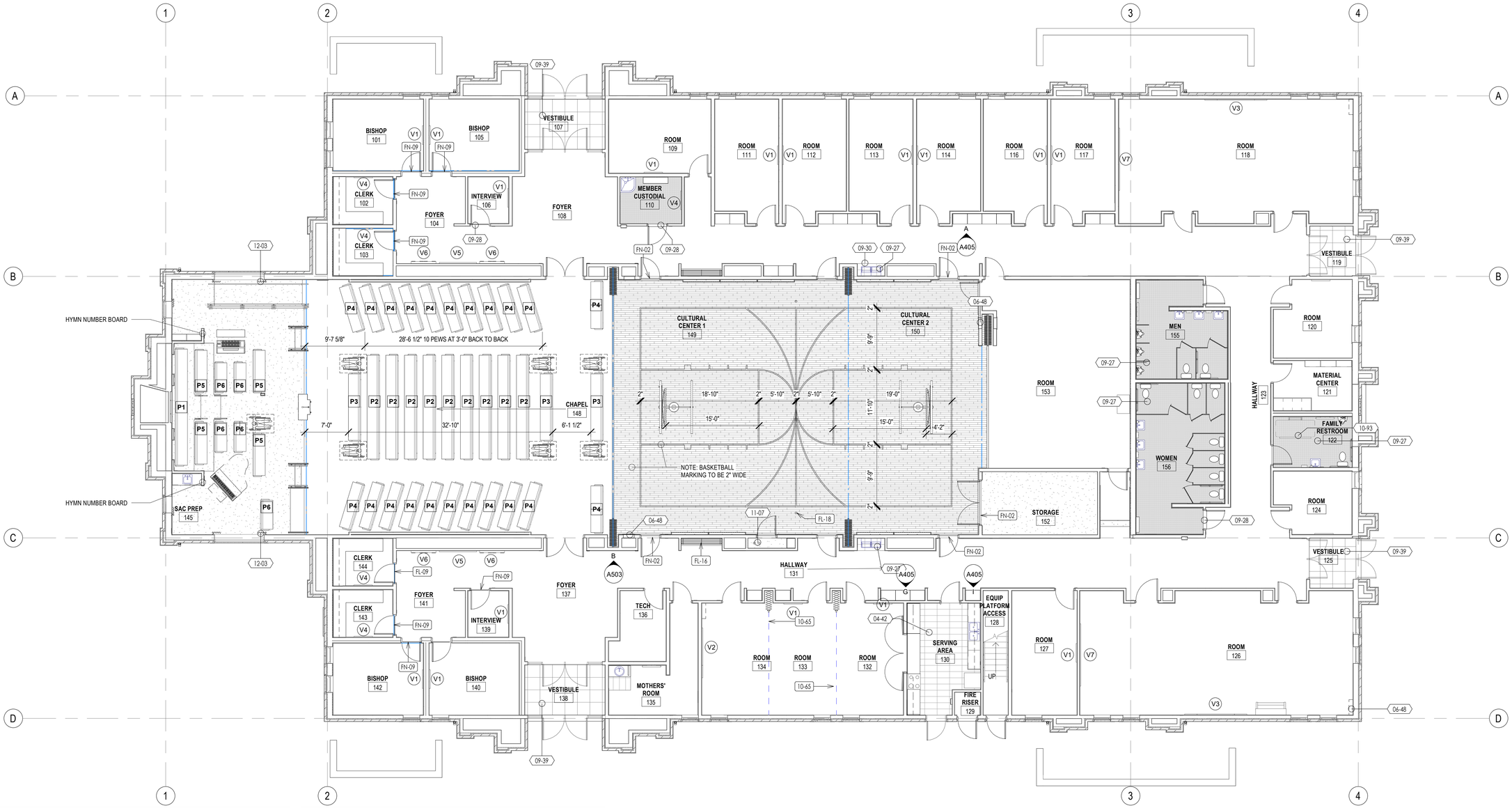

MAIN FLOOR FINISH PLAN

1/8" = 1'-0"

1 / F101

KEYNOTES

XX-XX — KEYNOTE MATERIAL

MATERIAL / SPECIFICATION KEYNOTES

04-42	
06-48	WOOD VENEER FACED ARCHITECTURAL CABINETS, SEE DETAILS & SPECIFICATION
09-27	QUARRY FLOOR TILE, AS SELECTED. SEE FINISH SCHEDULE, DETAILS & SPECIFICATION
09-28	MARBLE THRESHOLDS, SEE DETAILS AND SPECIFICATION
09-30	TILE METAL EDGE STRIPS SEE DETAILS & SPECIFICATION
09-39	MODULAR CARPET TILE AS SELECTED, SEE FINISH SCHEDULE/ SPECIFICATION
10-65	FOLDING ACCORDION DOOR, SEE DETAILS & SPECIFICATION
10-93	POTENTIAL FUTURE ADULT CHANGING STATION NOT INSTALLED, PROVIDE STRUCTURAL BLOCKING AND POWER, SEE SPECIFICATION
11-07	VOLLEYBALL POST HOLE, SEE DETAILS & SPECIFICATIONS
12-03	DRAPERIES AS SELECTED, SEE DETAILS & SPECIFICATION

FP-XX — KEYNOTE INSTRUCTION

INSTRUCTIONAL KEYNOTES

FL-09	FIRE EXTINGUISHER CABINETS (FEC), SEE SPECIFICATIONS. INSTALL IN ACCORDANCE WITH ALL ADA GUIDELINES. PROVIDE BLOCKING AS REQ'D. FOR INSTALLATION
FL-16	COAT RACK & SHELF, SEE DETAILS & SPECIFICATIONS
FL-18	VOLLEYBALL POST SLEEVE, SEE DETAILS
FN-02	DOOR THRESHOLD, WIDTH TO MATCH FULL DOOR FRAME
FN-09	SOUND CONTROL THRESHOLD, SEE DETAILS & SPECIFCATION

DRAPERY DIMENSIONS

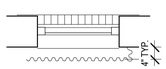

SINGLE WINDOW TYPE "S"
NO SCALE

THE DIMENSIONS ARE FOR REFERENCE ONLY. IT IS THE RESPONSIBILITY OF THE DRAPERY INSTALLATION CONTRACTOR TO PROVIDE FIELD MEASUREMENTS TO INSURE PROPER INSTALLATION.

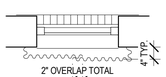

SINGLE WINDOW TYPE "P"
NO SCALE

1. LENGTH = 4" BELOW WINDOW SILL TO 4" ABOVE WINDOW HEAD.
2. FULLNES = 2 1/2 TIMES THE WINDOW WIDTH
3. 4" DOUBLE HEMS AND HEADINGS
4. STACKOFF OF 1/3 THE WINDOW WIDTH.

DRAPERY SCHEDULE

LOCATION	NO. REQUIRED PAIR	NO. REQUIRED SINGLE	REMARKS
ROSTRUM 147	2	2	CASEMENT AND BLACKOUT

PEW SCHEDULE

MARK	NO. REQUIRED	PEW LENGTH	LINEAL FEET
P1	1	19'-0"	19'-0"
P2	10	17'-0"	170'-0"
P3	2	12'-0"	24'-0"
P4	22	7'-10"	172'-4"
P5	4	7'-0"	28'-0"
P6	5	5'-0"	25'-0"

TOTAL LINEAL FEET: 438'-4"

NOTE:
PEW LENGTH IS MEASURED FROM OUTSIDE OF ARMREST TO OUTSIDE OF ARMREST.
SPACE ALL PEWS 3'-0" FROM BACK TO BACK.

bhd ARCHITECTS
www.bhdarchitects.com
Phone 801.571.0010
Fax 801.571.0303
Toll Free 888.571.0010
65 East Wadsworth Park Drive
Suite 205 Draper, Utah 84020

LICENSED ARCHITECT
Lafe Theadore Harris
15 Aug 2024
#6278-0301
STATE OF UTAH

THE CHURCH OF JESUS CHRIST OF LATTER-DAY SAINTS

Springwater 9
Vineyard UT Springwater Stake

Approx. 542 South Geneva Road
Vineyard, Utah 84059

BHD #: 2346
County Parcel: 39-228:0001
Plan Series: G300-MH-11
Owner #: 502-2004
Date: 15 Aug 2024

Drawing Issue and Revision Schedule

#	Date	Description

FURNISHINGS PLAN AND SCHEDULES

F101

8/15/2024 1:07:25 PM

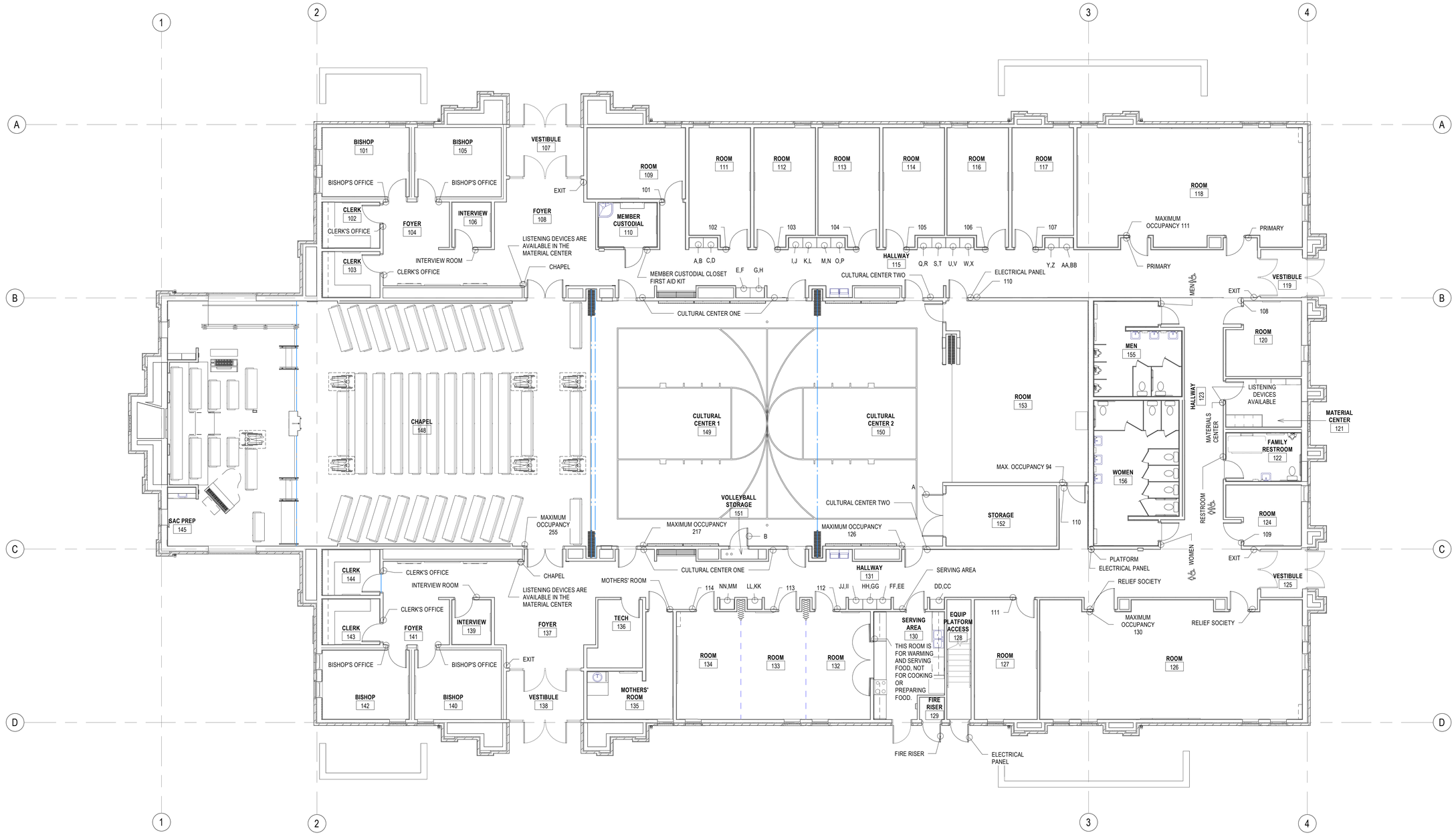

MAIN FLOOR SIGNAGE LOCATION PLAN

1/8" = 1'-0"

1 / F102

bhd ARCHITECTS
www.bhdarchitects.com
Phone 801.571.0010
Fax 801.571.0303
Toll Free 888.571.0010
65 East Wadsworth Park Drive
Suite 205 Draper, Utah 84020

LICENSED ARCHITECT
Lafe Theadore Harris
15 Aug 2024
My 8878-0301
STATE OF UTAH

THE CHURCH OF JESUS CHRIST OF LATTER-DAY SAINTS

Springwater 9
Vineyard UT Springwater Stake

Approx. 542 South Geneva Road
Vineyard, Utah 84059

BHD #: 2346
County Parcel: 39-228-0001
Plan Series: G300-MH-11
Owner #: 502-2004
Date: 15 Aug 2024

Drawing Issue and Revision Schedule

#	Date	Description

ROOM SIGNAGE LOCATION PLAN

F102

8/15/2024 1:07:28 PM

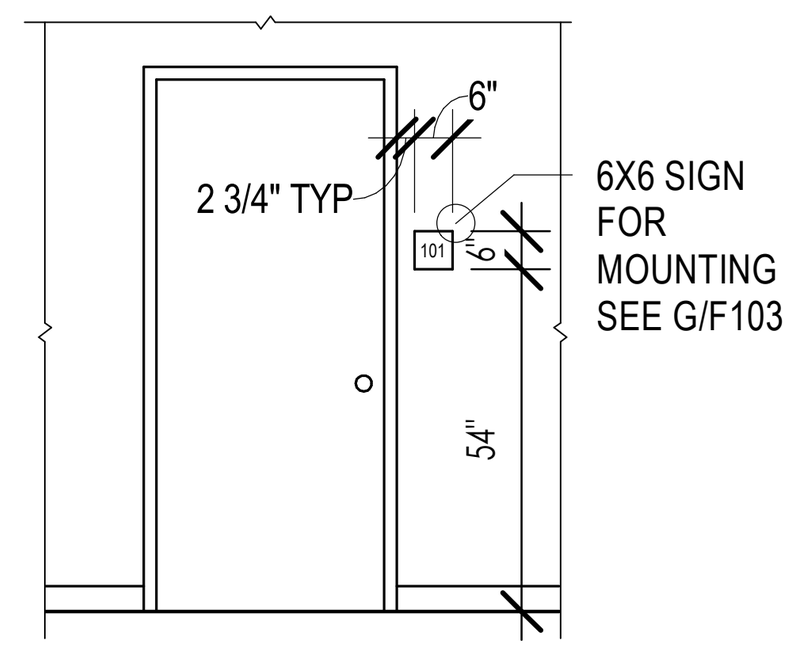

MOLDED SIGN MOUNTING (A / F103)
1/4" = 1'-0"

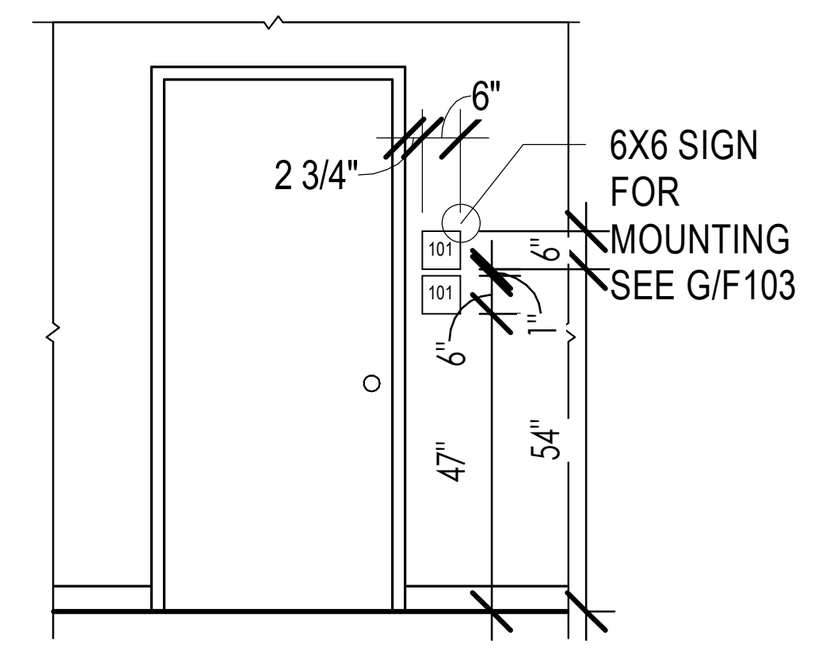

DOUBLE MOLDED SIGN MOUNTING (B / F103)
1/4" = 1'-0"

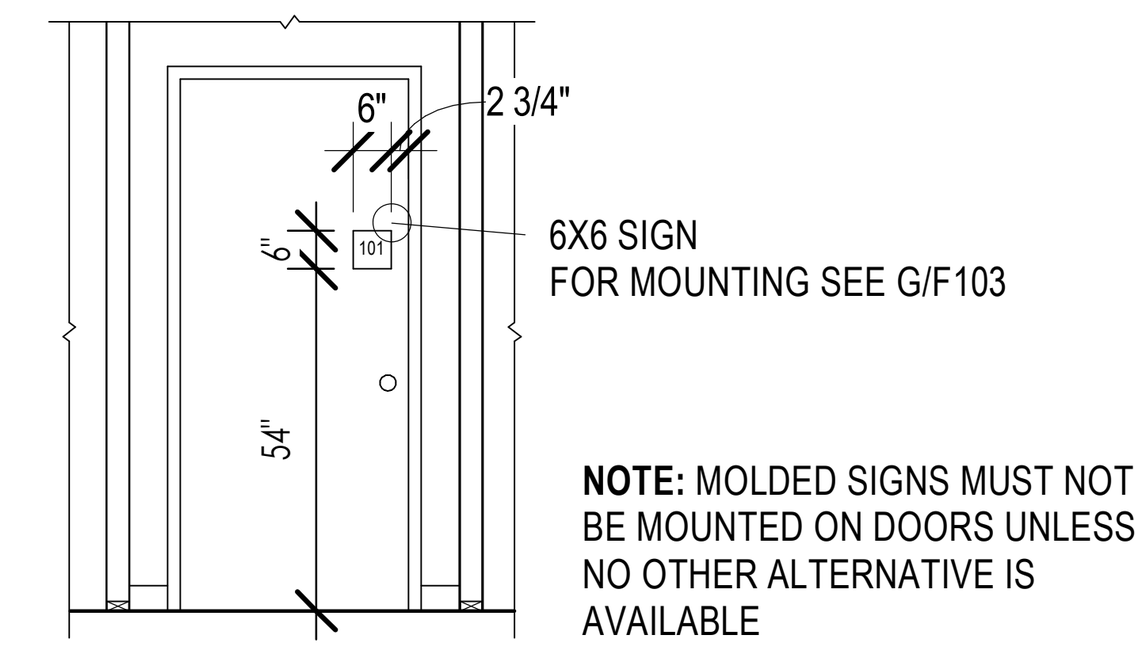

NOTE: MOLDED SIGNS MUST NOT BE MOUNTED ON DOORS UNLESS NO OTHER ALTERNATIVE IS AVAILABLE

MOLDED SIGN DOOR MOUNTING (C / F103)
1/4" = 1'-0"

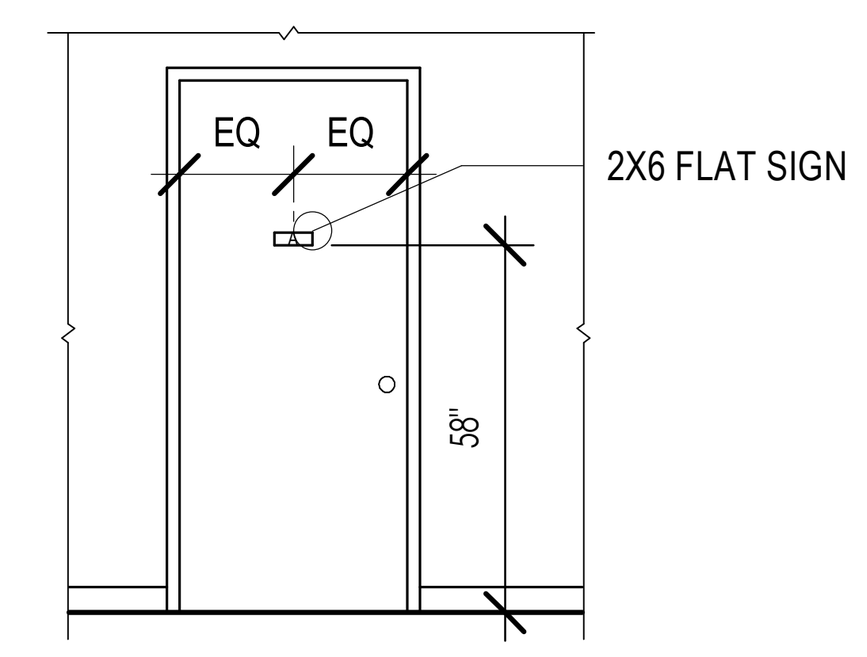

FLAT SIGN DOOR MOUNTING (D / F103)
1/4" = 1'-0"

NOTE:
MOUNT SIGN TWO THIRDS UP FROM BOTTOM OF CABINET AND CENTERED ON RIGHT CABINET DOOR.

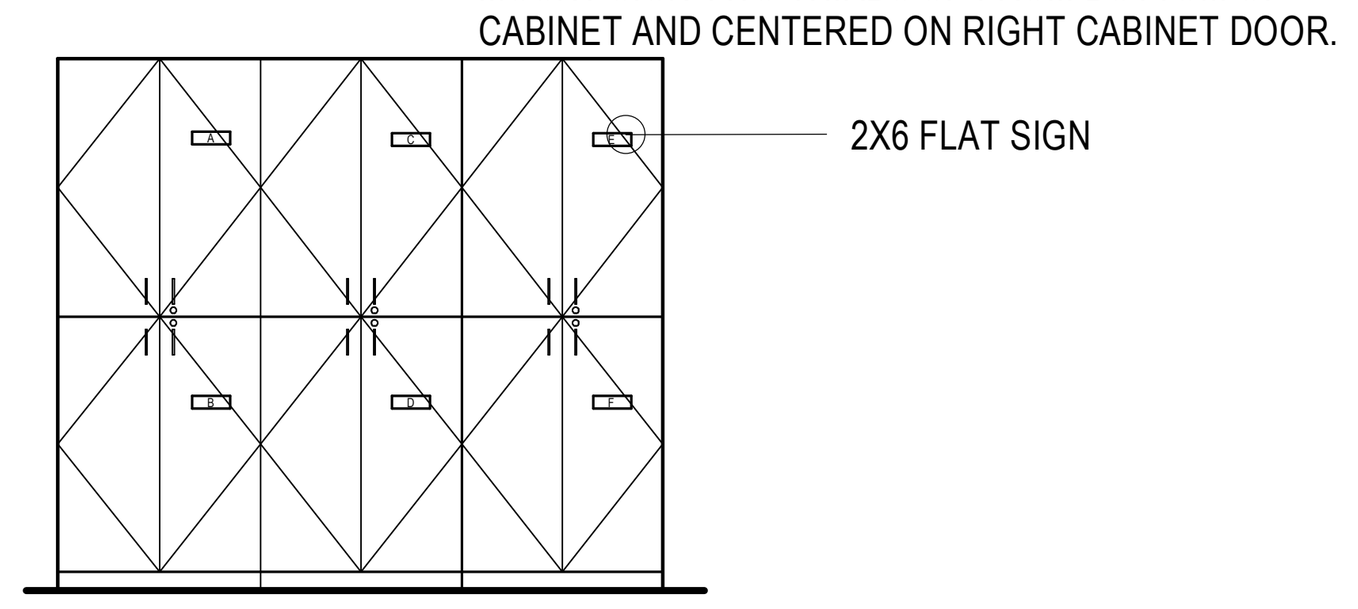

FLAT SIGN MOUNTING ON CABINET (E / F103)
1/4" = 1'-0"

NOTE:
SIGN IS SUPPLIED WITH SELF-ADHESIVE

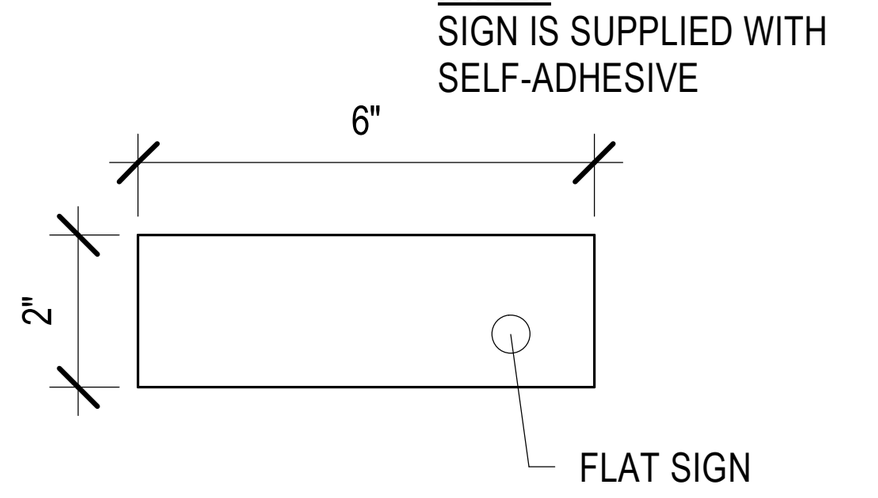

FLAT SIGN DETAIL (F / F103)
3" = 1'-0"

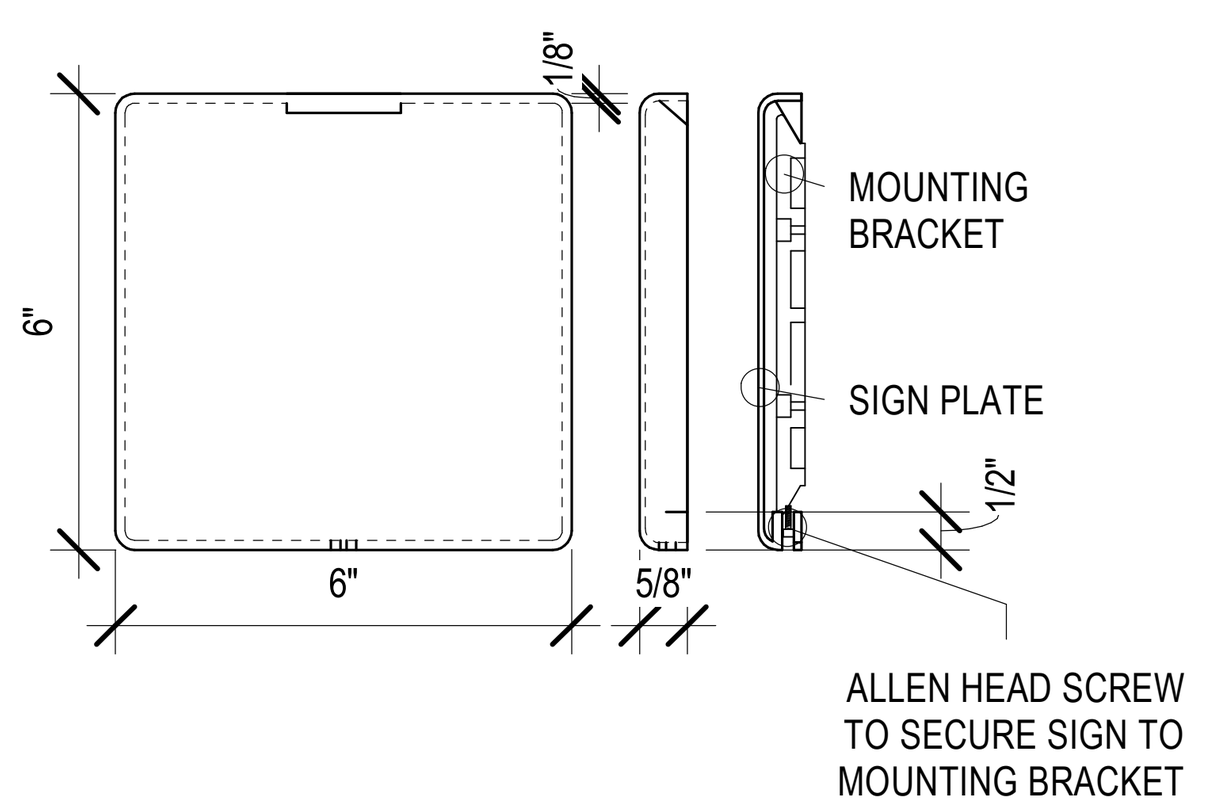

MOLDED SIGN PLATE DETAIL (G / F103)
3" = 1'-0"

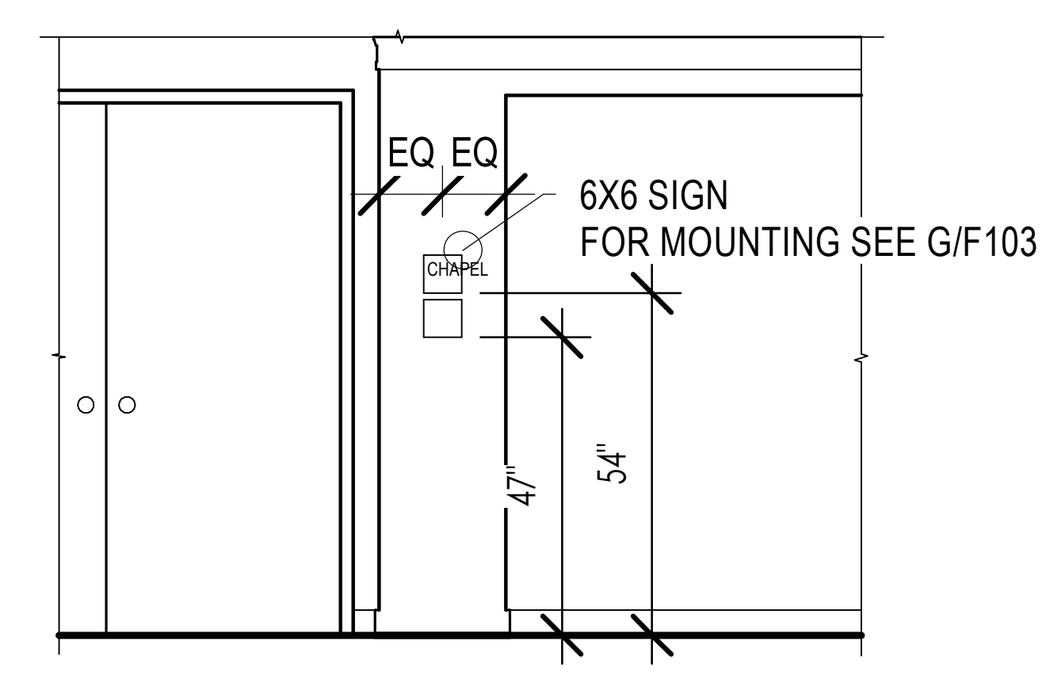

MOLDED SIGN MOUNTING LOCATION (H / F103)
1/4" = 1'-0"

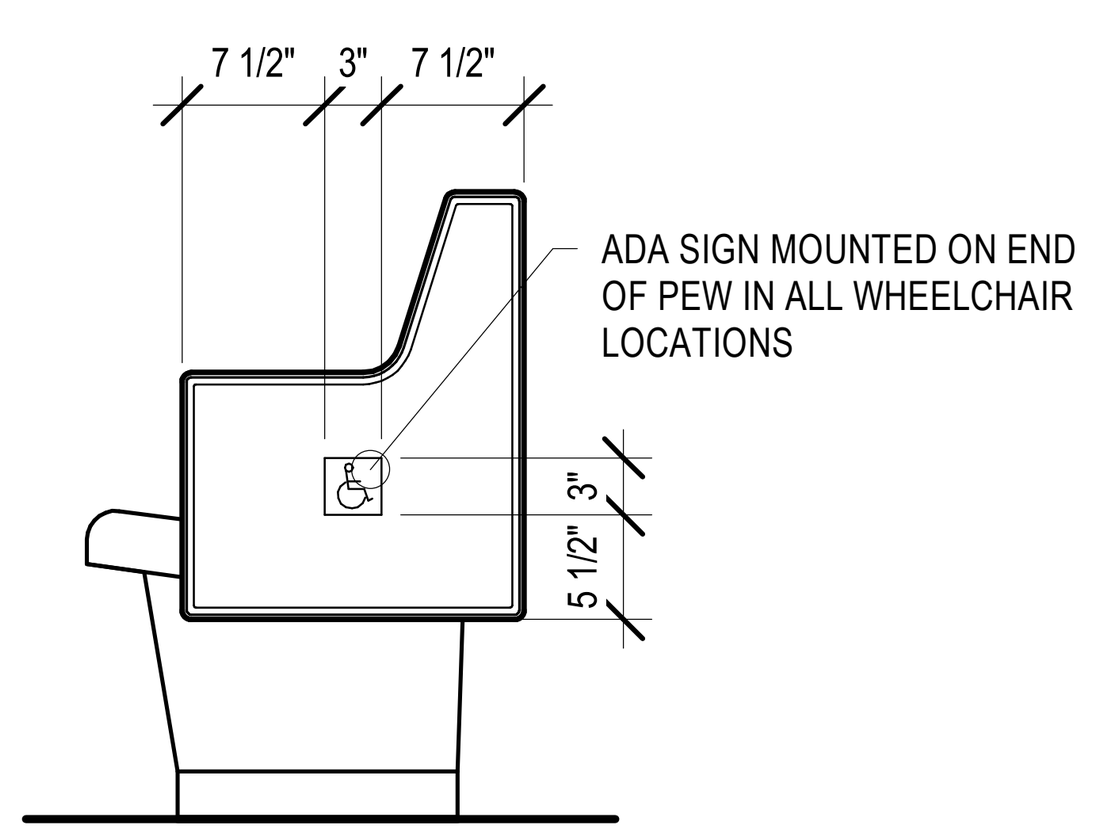

ADA SIGN MOUNTED ON PEW (J / F103)
3/4" = 1'-0"

NOTE:
TYPICAL BLOCKING REQUIRED BEHIND WALL MOUNTED ACCESSORIES, EQUIPMENT AND DRAPERY MOUNTING LOCATIONS.

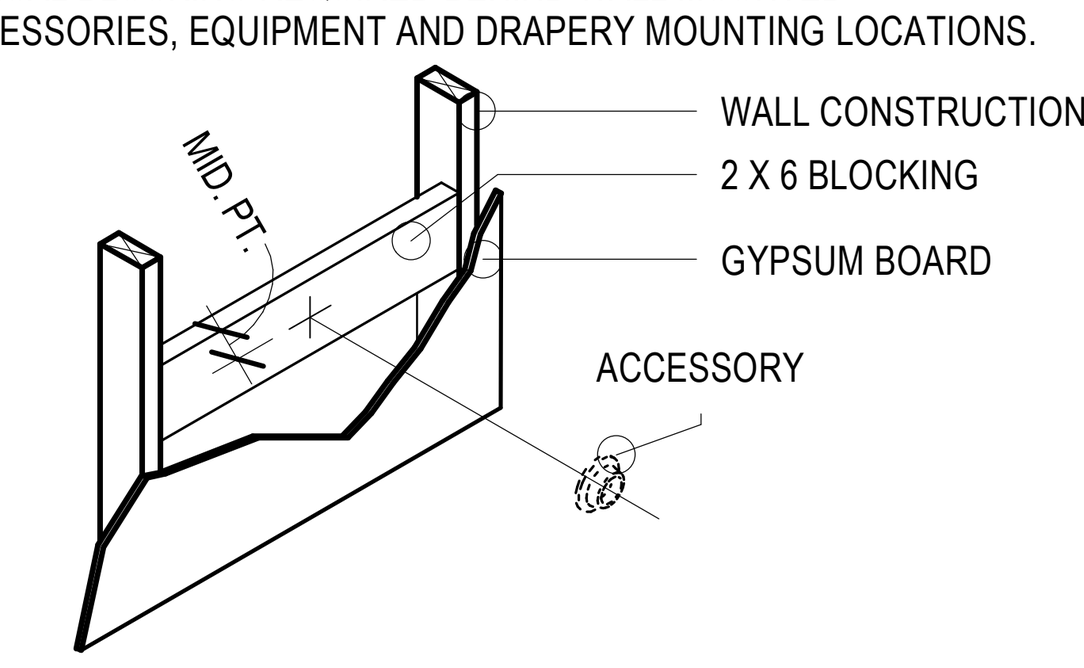

TYPICAL BLOCKING DETAIL (K / F103)
1/2" = 1'-0"

VISUAL DISPLAY BOARD NOTES

TYPE
TYPE 1 GLASSBOARD
TYPE 2 TACKBOARD
TYPE 3 DISPLAY CABINET

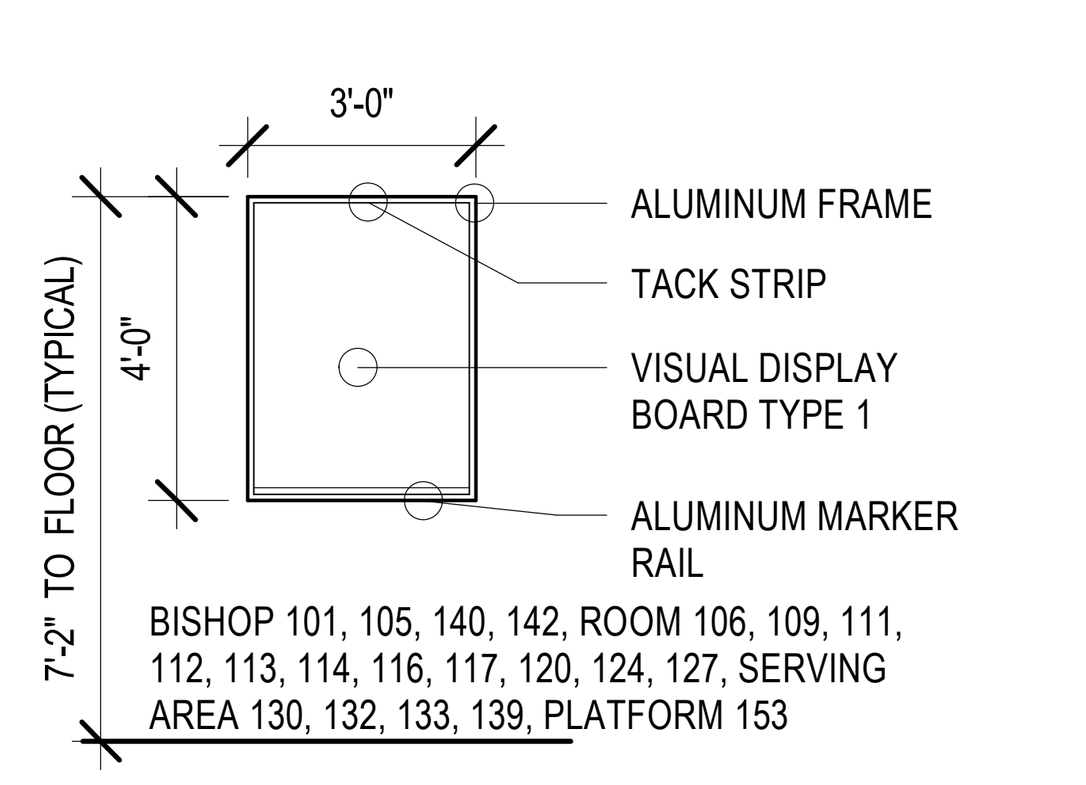

V1 DISPLAY BOARD (L / F103)
1/4" = 1'-0"

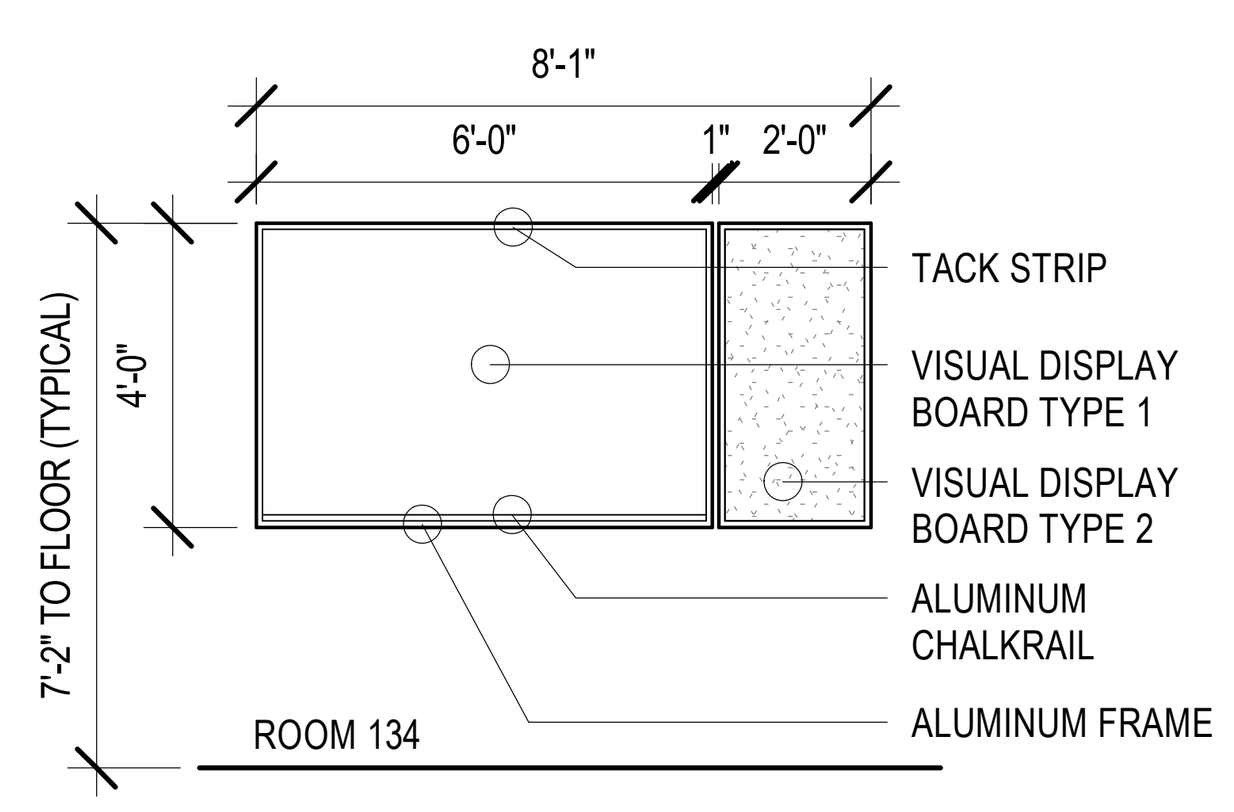

V2 DISPLAY BOARD (M / F103)
1/4" = 1'-0"

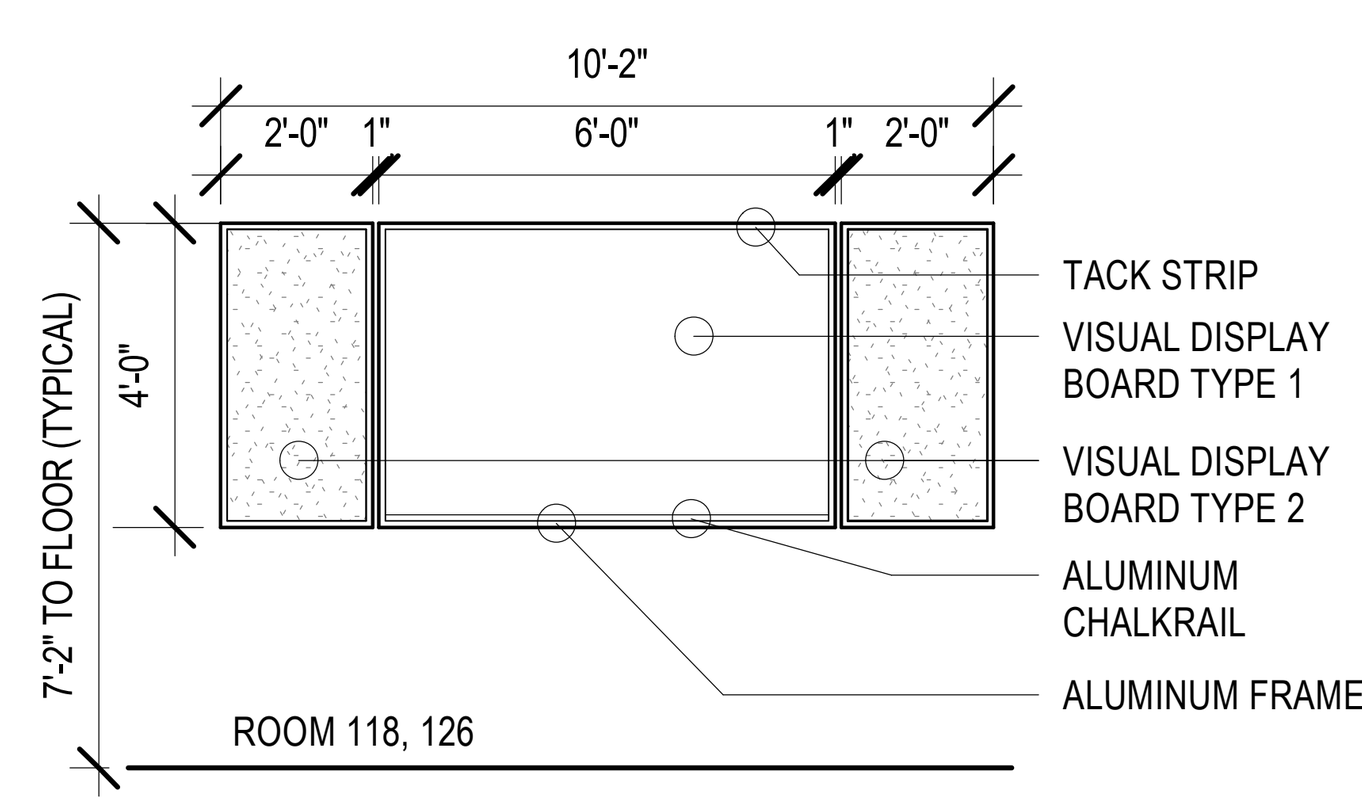

V3 DISPLAY BOARD (N / F103)
1/4" = 1'-0"

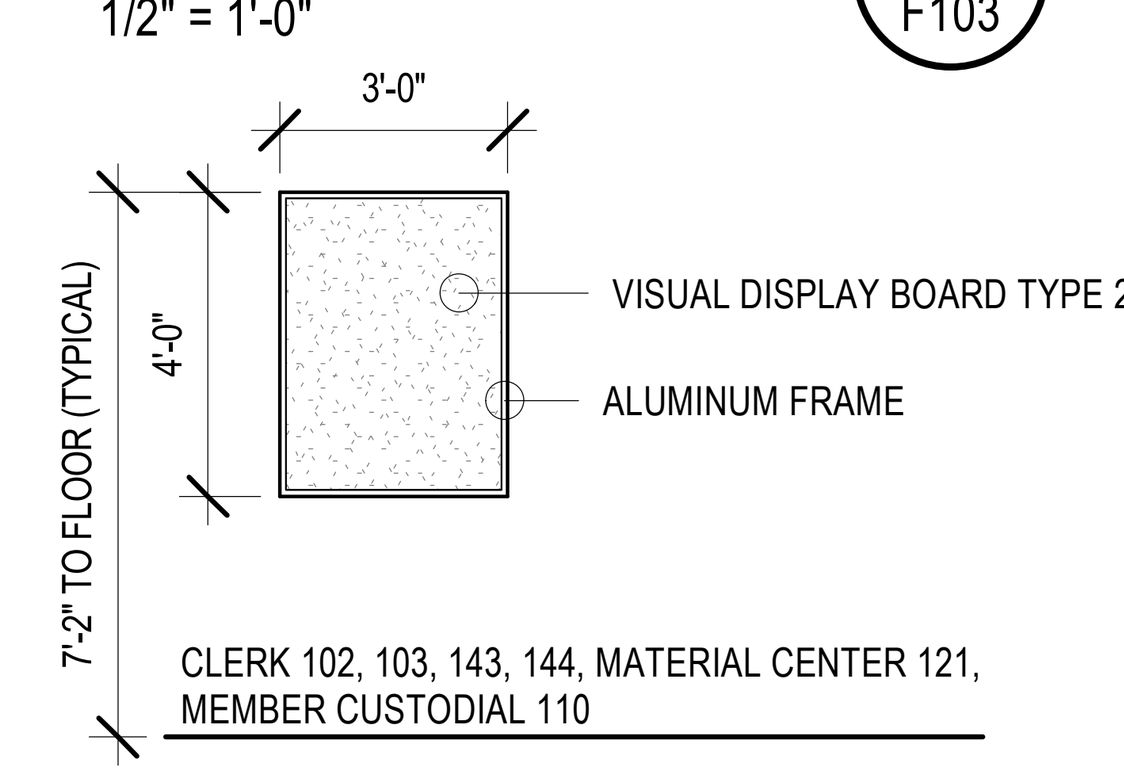

V4 DISPLAY BOARD (P / F103)
1/4" = 1'-0"

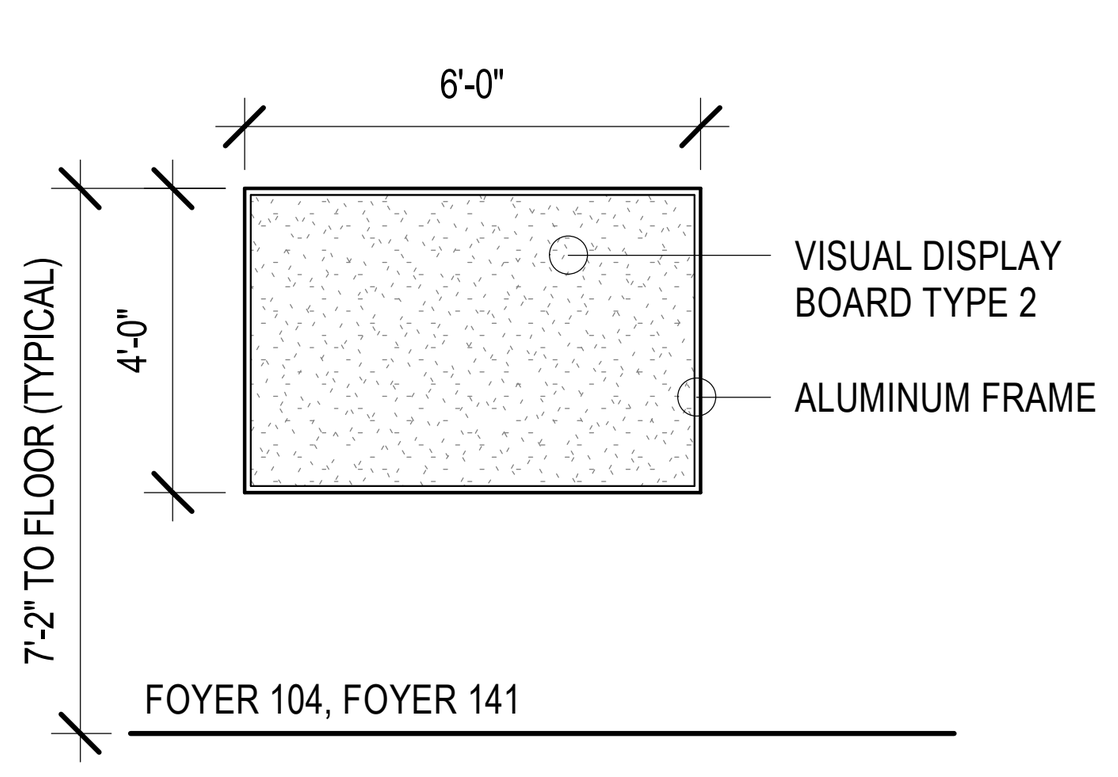

V5 DISPLAY BOARD (Q / F103)
1/4" = 1'-0"

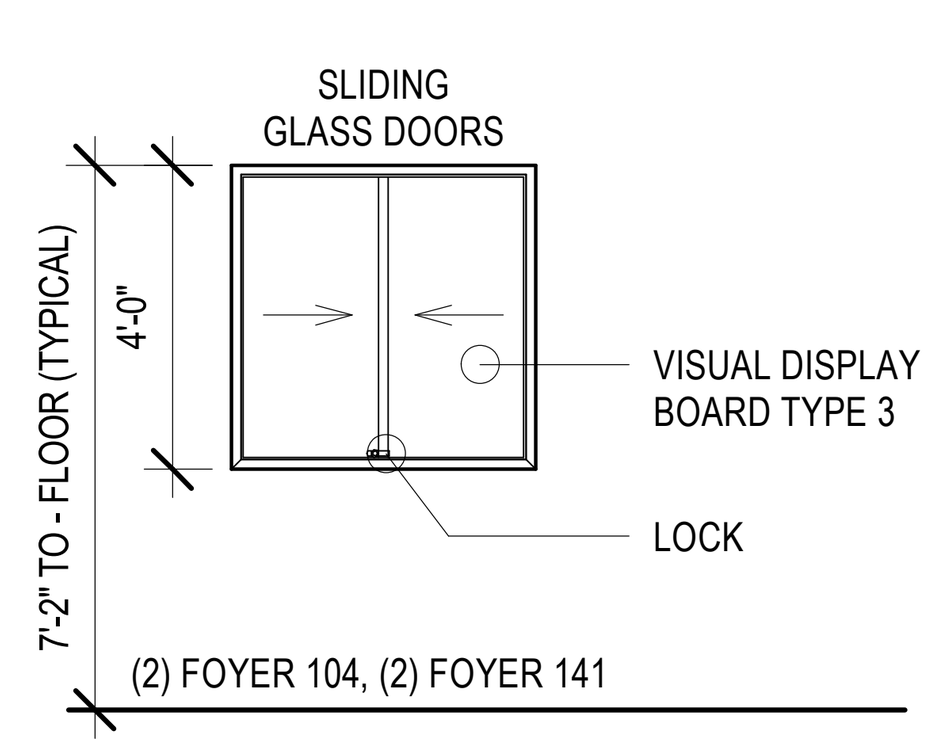

V6 DISPLAY BOARD (R / F103)
1/4" = 1'-0"

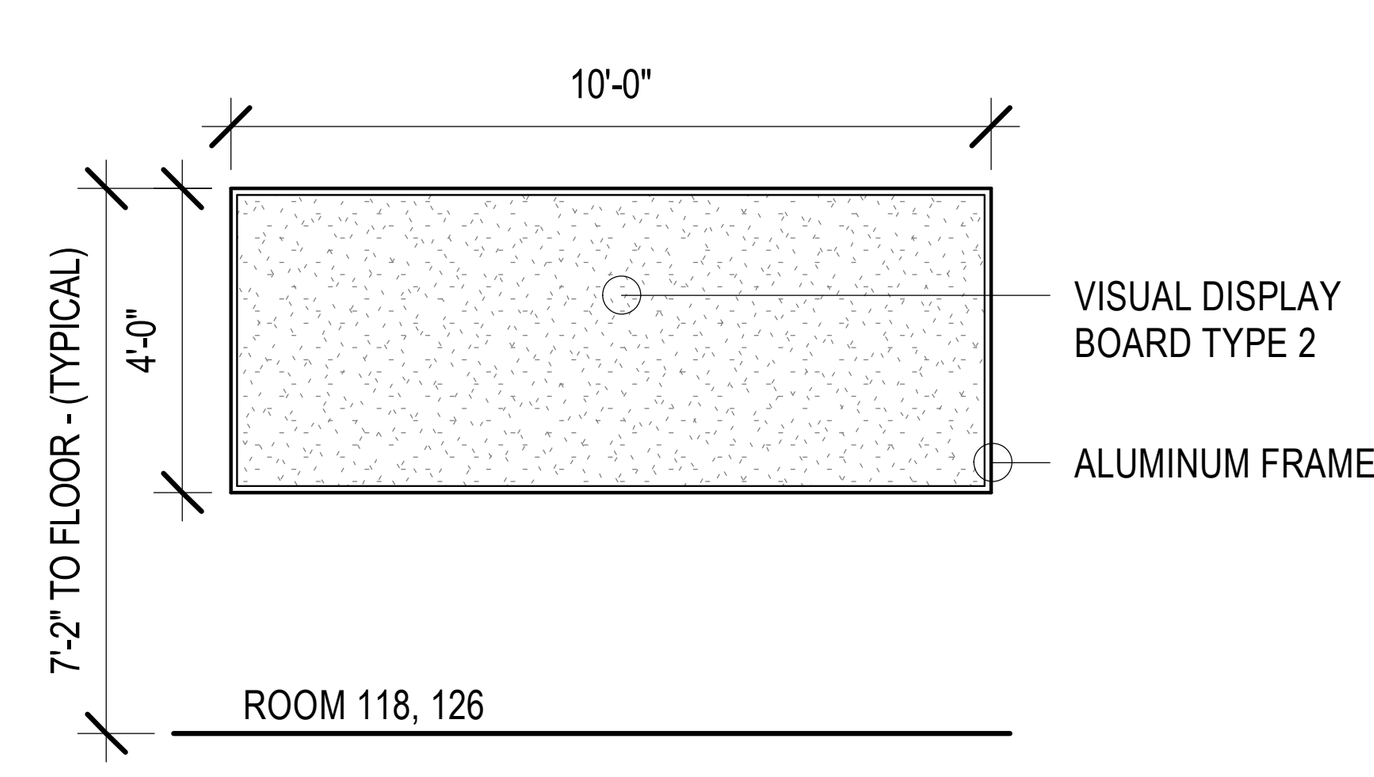

V7 DISPLAY BOARD (S / F103)
1/4" = 1'-0"

FINISH SCHEDULE

ROOM NO.	NAME	FLOOR	BASE	WALL	CEILING	SPECIAL TRIM OR EQUIP.
101	BISHOP	F1	B1	W4	C1	S2 S21
102	CLERK	F1	B1	W4	C1 C7	S2 S3 S21
103	CLERK	F1	B1	W4	C3 C7	S2 S3 S21
104	FOYER	F1	B1	W4	C1 C2 C3 C4	S2
105	BISHOP	F1	B1	W4	C1	S2 S21
106	INTERVIEW	F1	B1	W4	C1	S2 S21
107	VESTIBULE	F6	B1	W5	C4	S21
108	FOYER	F1	B1	W4	C4	S1 S2
109	ROOM	F1	B1	W4	C9	S2 S21
110	MEMBER CUSTODIAL	F8	B2	W3 W5	C2	S13
111	ROOM	F1	B1	W4	C9	S2 S21
112	ROOM	F1	B1	W4	C9	S2 S21
113	ROOM	F1	B1	W4	C9	S2 S21
114	ROOM	F1	B1	W4	C9	S2 S21
115	HALLWAY	F1 F8	B1 B2	W3 W4	C1 C2 C3 C4 C7	S2 S3 S8 S10 S18
116	ROOM	F1	B1	W4	C9	S2 S21
117	ROOM	F1	B1	W4	C9	S2 S21
118	ROOM	F1	B1	W4	C1 C2	S1 S2 S14 S21
119	VESTIBULE	F6	B1	W5	C4	S21
120	ROOM	F1	B1	W4	C9	S2 S14
121	MATERIAL CENTER	F1	B1	W4	C1 C7	S2 S3 S21
122	FAMILY RESTROOM	F8	B2	W3 W5	C2	S15 S16 S17 S21
123	HALLWAY	F1	B1	W4	C3 C4	S2
124	ROOM	F1	B1	W4	C9	S2 S21
125	VESTIBULE	F6	B1	W5	C4	S21
126	ROOM	F1	B1	W4	C1 C2 C4	S1 S2 S14 S23
127	ROOM	F1	B1	W4	C9	S2 S21
128	EQUIP PLATFORM ACCESS	F4 F7	B3	W5		S12
129	FIRE RISER	F4	B3	W5	C2	
130	SERVING AREA	F8	B2	W5	C2 C7	S3 S11
131	HALLWAY	F1 F8	B1 B2	W3 W4	C1 C2 C3 C4 C7	S2 S3 S8 S10 S12 S18
132	ROOM	F1	B1	W4	C9	S2 S14 S21
133	ROOM	F1	B1	W4	C9	S2 S21
134	ROOM	F1	B1	W4	C9	S2 S21
135	MOTHERS' ROOM	F1 F8	B1 B2	W3 W4	C9	S2 S16 S20 S21
136	TECH	F1	B3	W5 W7	C2	S5 S6
137	FOYER	F1	B1	W4	C4	S1 S2
138	VESTIBULE	F6	B1	W5	C4	S21
139	INTERVIEW	F1	B1	W4	C1	S2 S21
140	BISHOP	F1	B1	W4	C1	S2 S21
141	FOYER	F1	B1	W4	C1 C2 C3 C4	S2
142	BISHOP	F1	B1	W4	C1	S2 S21
143	CLERK	F1	B1	W4	C1 C7	S2 S3 S21
144	CLERK	F1	B1	W4	C3 C7	S2 S3 S21
145	SAC PREP	F1	B1	W2 W5	C4	S1 S3
146	ORGAN SPEAKER CHAMBER	F5	B4	W5	C4	S22
147	ROSTRUM	F1	B1	W2 W5	C4	S1 S12
147	ROSTRUM					
148	CHAPEL	F1	B1	W2 W5	C4 C9	S1
149	CULTURAL CENTER 1	F2	B5	W1 W5	C3 C4 C9	S1 S4 S14
150	CULTURAL CENTER 2	F2	B5	W1 W5	C3 C4	S1 S4 S14
151	VOLLEYBALL STORAGE	F1	B3	W8	C4	S19
152	STORAGE	F1	B3	W8	C4	
153	ROOM	F1	B1	W4	C1 C4	S2 S12 S14
154	RAMP	F1	B1	W4	C1	S2 S12
155	MEN	F3	B2	W3 W5	C4	S16 S17 S20 S21
156	WOMEN	F3	B2	W3 W5	C4	S16 S17 S20 S21
159	Custodial					
201	EQUIPMENT PLATFORM	F5	B4	W6		S11

FINISH SCHEDULE LEGEND

F	FLOOR
F1	CARPET
F2	WOOD FLOOR SYSTEM
F3	PAVER TILE
F4	CONCRETE, PAINTED
F5	3/4" SHEATHING, PAINTED
F6	CARPET TILE
F7	STAIR TREADS AND RISERS, RUBBER
F8	PAVER TILE THIN SET
B	BASE
B1	CARPET
B2	PAVER TILE, COVED
B3	4" RUBBER
B4	NONE
B5	METAL ANGLE
W	WALLS
W1	WALL COVERING "A" (SISAL)
W2	WALL COVERING "B" (VINYL)
W3	CERAMIC TILE, SEE INTERIOR ELEVATIONS
W4	WALL COVERING "A" (SISAL) WAINSCOT WITH PAINTED GYPSUM BOARD ABOVE.
W5	GYPSUM BOARD, PAINTED.
W6	GYPSUM BOARD, TAPED
W7	7/16" WOOD SHEATHING, PAINTED
W8	WALL COVERING"A" (SISAL) ON 7/16" WOOD SHEATHING - FULL HEIGHT
C	CEILING
C1	CEILING SUSPENSION SYSTEM WITH GYPSUM BOARD AND ACOUSTICAL TILE
C2	CEILING SUSPENSION SYSTEM WITH GYPSUM BOARD - PAINTED
C3	ACOUSTICAL TILE ON GYPSUM BOARD
C4	GYPSUM BOARD - PAINTED
C5	METAL SOFFIT - SEE A/A122
C6	CONTINUOUS VENT STRIP
C7	WOOD FURRED DOWN OVER CABINETS - SEE A/A407
C8	EXTERIOR STUCCO SYSTEM SOFFIT
C9	2'x2' SUSPENDED ACOUSTICAL TILE GRID
S	SPECIAL TRIM OR EQUIPMENT
S1	WOOD TRIM
S2	CHAIR RAIL
S3	CABINETS
S4	DECORATION ANCHORS
S5	TELEPHONE BOARD
S6	SOUND MAIN EQUIPMENT CABINET, SEE SOUND DRAWINGS
S7	SOUND CONTROL PANEL, SEE SOUND DRAWINGS
S8	ELECTRIC WATER COOLER
S9	ELECTRIC PANEL
S10	FIRE EXTINGUISHER CABINET
S11	WALL MOUNTED FIRE EXTINGUISHER
S12	HANDRAIL
S13	CUSTODIAL UTILITY SHELF
S14	HYMN BOOK STORAGE
S15	FUTURE ADULT CHANGING STATION - INSTALL BACKING AND POWER
S16	BABY CHANGING STATION
S17	UTILITY SHELF (STAINLESS STEEL)
S18	COAT RACK
S19	ADJUSTABLE SHELVES
S20	24" X 60" MIRROR, WALL HUNG
S21	INSULATION TYPE "A" ABOVE CEILING
S22	PAINT BLACK
S23	WALL OR CEILING MOUNTED TV

SEE SPECIFICATIONS FOR WALL FINISH TEXTURES

BUILDING SIGNAGE SCHEDULE

SIGNAGE ROOM NAME OR NUMBER	QUANTITY	SIZE	MOUNTING	PLAN ROOM #	NOTES
101	1	6" X 6"	A/F103	109	
102	1	6" X 6"	A/F103	111	
103	1	6" X 6"	A/F103	112	
104	1	6" X 6"	A/F103	113	
105	1	6" X 6"	A/F103	114	
106	1	6" X 6"	A/F103	116	
107	1	6" X 6"	A/F103	117	
108	1	6" X 6"	A/F103	120	
109	1	6" X 6"	A/F103	124	
110	1	6" X 6"	A/F103	127	
111	1	6" X 6"	A/F103	132	
112	1	6" X 6"	A/F103	133	
113	1	6" X 6"	A/F103	134	
A (FLAT SIGN ONLY)	1	6" X 2"	D/F103	152	
B (FLAT SIGN ONLY)	1	6" X 2"	D/F103	151	
A THRU H (FLAT SIGN ONLY)	2 EACH	6" X 2"	E/F103	115, 131	
I THRU X (FLAT SIGN ONLY)	1 EACH	6" X 2"	E/F103	115	
AA THRU DD (FLAT SIGN ONLY)	1 EACH	6" X 6"	E/F103	115	
MAXIMUM OCCUPANCY 255	1	6" X 6"	A/F103	148	
MAXIMUM OCCUPANCY 217	1	6" X 6"	A/F103	149	
MAXIMUM OCCUPANCY 130	1	6" X 6"	A/F103	126	
MAXIMUM OCCUPANCY 126	1	6" X 6"	A/F103	150	
MAXIMUM OCCUPANCY 111	1	6" X 6"	A/F103	118	
MAXIMUM OCCUPANCY 94	1	6" X 6"	A/F103	153	
BISHOP'S OFFICE - WARD NAME	4	6" X 6"	A/F103	101, 105, 140, 142	SPECIFY WARD
CHAPEL	2	6" X 6"	A/F103	148	
CLERK'S OFFICE	4	6" X 6"	A/F103	102, 103, 143, 144	
CULTURAL CENTER ONE	4	6" X 6"	A/F103	149	
CULTURAL CENTER TWO	2	6" X 6"	A/F103	150	
ELECTRICAL PANEL	2	6" X 6"	A/F103	153, 154	
ELECTRICAL PANEL (FLAT SIGN)	1	6" X 6"	D/F103	128	EXTERIOR
EXIT (TACTILE, BRAILLE)	4	6" X 6"	A/F103	108, 115, 131, 137	
FIRE RISER (FLAT SIGN)	1	6" X 6"	D/F103	129	EXTERIOR
INTERVIEW ROOM	2	6" X 6"	A/F103	106, 139	
MATERIALS CENTER	1	6" X 6"	A/F103	121	
MEMBER CUSTODIAL CLOSET FIRST AID KIT	1	6" X 6"	A/F103	110	
MEN 🚹♿	1	6" X 6"	B/F103	155	
MOTHER'S ROOM	1	6" X 6"	A/F103	135	
PLATFORM	1	6" X 6"	A/F103	131	
PLATFORM ♿	1	6" X 6"	A/F103	115	
PRIMARY ROOM	2	6" X 6"	A/F103	118	
RAMP ♿ ←	1	6" X 6"	A/F103	153	ARROW LEFT
RELIEF SOCIETY	2	6" X 6"	A/F103	126	
RESTROOM 🚹🚺♿	1	6" X 6"	A/F103	122	
RESTROOM 🚹🚺♿ ←	1	6" X 6"	B/F103	123	ARROW LEFT
RESTROOM 🚹🚺♿ →	1	6" X 6"	B/F103	123	ARROW RIGHT
SERVING AREA	1	6" X 6"	A/F103	130	
WOMEN 🚺♿	1	6" X 6"	B/F103	156	
LISTENING DEVICES AVAILABLE IN THE MATERIALS CENTER	2	6" X 6"	MOUNT BELOW THE "CHAPEL" SIGN. SEE B/F103	148	
LISTENING DEVICES AVAILABLE	1	6" X 6"	MOUNT BELOW THE MATERIALS" CENTER" SIGN. SEE B/F103	121	
♿ PEW MOUNTED ADA SIGN	9	3" X 3"	K/F103.	147, 148	
THIS ROOM IS FOR WARMING AND SERVING FOOD, NOT FOR COOKING OR PREPARING FOOD.	1	6" X 6"	MOUNT ABOVE BACKSPLASH ON WALL TO THE RIGHT OF THE RANGE	130	

bhd ARCHITECTS
www.bhdarchitects.com
Phone 801.571.0010
Fax 801.571.0303
Toll Free 888.571.0010
65 East Wadsworth Park Drive
Suite 205 Draper, Utah 84020

LICENSED ARCHITECT
Lafe Theodore Harris
6928898-0301
STATE OF UTAH
15 Aug 2024

THE CHURCH OF JESUS CHRIST OF LATTER-DAY SAINTS

Springwater 9
Vineyard UT Springwater Stake
Approx. 542 South Geneva Road
Vineyard, Utah 84059

Date: 15 Aug 2024
BHD #: 2346
County Parcel: 39:228:0001
Plan Series: G300-MH-11
Owner #: 502-2004

Drawing Issue and Revision Schedule

#	Date	Description

ROOM SIGNAGE & FINISH SCHEDULE AND DETAILS

F103

8/15/2024 1:07:32 PM

FOOTING AND FOUNDATION NOTES:

1. SEE SHEET S602 FOR FOOTING SCHEDULE AND CONCRETE FOUNDATION WALL SCHEDULE.
2. VERIFY ALL DIMENSIONS AND NOTIFY ARCHITECT AND ENGINEER OF DISCREPANCIES FOUND.
3. INTERIOR CONCRETE FLOOR SLAB ON GRADE TO BE 4" THICK WITH #4 BARS AT 18" ON CENTER EACH WAY WITH 1" CLEAR TO TOP SURFACE.
4. NO CONTROL JOINTS ALLOWED IN INTERIOR CONCRETE SLAB ON GRADE UNLESS APPROVED BY ARCHITECT.
5. FINISH FLOOR ELEVATION IS 100'-0".
6. SEE DETAIL 1/S501 FOR PIPES PERPENDICULAR AND PARALLEL TO FOOTING DETAIL.
7. SEE DETAIL 2/S501 FOR TYPICAL REINFORCING AT INTERSECTIONS IN CONCRETE WALLS.
8. SEE DETAIL 3/S501 FOR SILL PLATES BOLTING DETAIL.
9. SEE DETAIL 4/S501 FOR TYPICAL STEPPED FOOTING DETAIL.
10. SEE DETAIL 9/S501 FOR TYPICAL SLAB ON GRADE DETAIL.
11. DEPRESS FLOOR SLAB AS SHOWN ON PLANS FOR TILE/WOOD FLOOR SYSTEM. SEE 5/S501, 10/S501 AND 11/S501 FOR DETAIL AT STEP IN SLAB. REFER TO ARCHITECTURAL DRAWINGS FOR DIMENSIONS.
12. RECESS FOUNDATION WALL 8" AT DOORWAYS AND POUR SLAB THRU OPENING. SEE 8/S503.
13. SEE DETAIL 8/S501 AND 12/S503 WHERE SPOT FOOTINGS AND CONTINUOUS FOOTINGS ARE POURED AT DIFFERENT TIMES.
14. SEE DETAIL 1/S504 FOR TYPICAL FOOTING OVER COMPACTED STRUCTURAL FILL.
15. ALL DIMENSIONS TO STUD WALL ARE TO FACE OF STUD WALL AND NOT TO SHEATHING.
16. SPOT FOOTINGS ARE TO BE CENTERED UNDER COLUMN OR HOLDOWN.
17. SEE CIVIL DRAWINGS FOR MECHANICAL ENCLOSURE.
18. TOP OF FOOTING 98"-0" TYPICAL UNLESS NOTED OTHERWISE AT ALL EXTERIOR FOOTINGS.
19. TOP OF FOOTING 99"-6" TYPICAL UNLESS NOTED OTHERWISE AT ALL INTERIOR FOOTINGS.

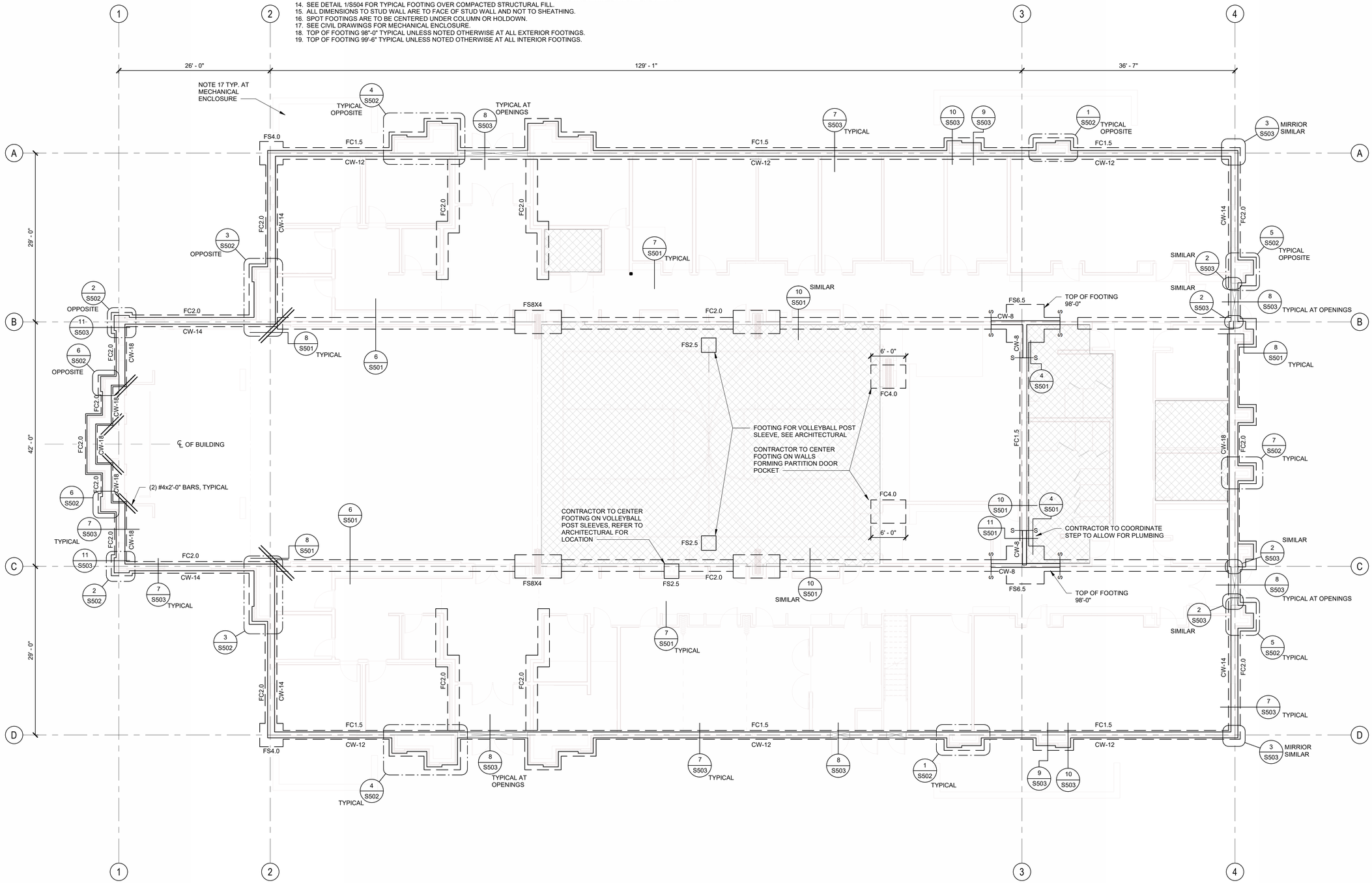

FOOTING AND FOUNDATION PLAN

SCALE : 1/8" = 1'-0"

A
S101

8/15/2024 11:25:38 AM

bhd ARCHITECTS
www.bhdarchitects.com
Phone 801.571.0010
Fax 801.571.0303
Toll Free 888.571.0010
65 East Wadsworth Park Drive
Suite 205 Draper, Utah 84020

STATE OF UTAH — Matthew C. McBride — No. 353893 — 8/14/24

THE CHURCH OF JESUS CHRIST OF LATTER-DAY SAINTS

Springwater 9
Vineyard UT Springwater Stake

Approx. 542 South Geneva Road
Vineyard, Utah 84059

BHD #: 2346
County Parcel: 39-228:0001
Plan Series: C300-MH-11
Owner #: 502-2004
Date: 15 Aug 2024

Drawing Issue and Revision Schedule

#	Date	Description
1	15 Aug 2024	Bid Documents

FOOTING AND FOUNDATION PLAN

S101

ANCHOR BOLT, HOLDOWN AND WALL-TYPE PLAN NOTES:

1. SEE DETAIL 1/S521 FOR TYPICAL TOP PLATE SPLICE DETAIL.
2. SEE DETAIL 2/S521 FOR TYPICAL TOP PLATE SPLICE PENETRATION SCHEDULE.
3. SEE DETAIL 3/S521 AND DETAIL 4/S521 FOR TYPICAL WALL PENETRATIONS.
4. SEE WOOD BEAM SCHEDULE ON SHEET S603 FOR BUILT-UP BEAM INFORMATION.
5. SEE SCHEDULES ON S603 AND S604 FOR WALL, ROOF, FLOOR SHEATHING AND NAILING REQUIREMENTS.
6. FOR UNMARKED INTERIOR HEADERS, USE (3) 2x6 FOR 2x6 WALLS, AND (2) 2x6 FOR 2x4 WALLS. USE (1) BEARING AND (1) KING STUD.
7. SEE DETAILS 6/S521, 7/S521 AND 9/S521 FOR BRACING AT NON-STRUCTURAL WALLS.
8. SEE SHEET S503 FOR ANCHOR AND HOLDOWN DETAIL AND SCHEDULES.
9. SEE SHEET S603 FOR STRUCTURAL WOOD WALL SCHEDULE.
10. SEE SHEET S502 FOR ADDITIONAL FOOTING AND FOUNDATION WALL INFORMATION AT WALL POP-OUTS.
11. SEE ARCHITECTURAL FOR NON-STRUCTURAL WALLS.
12. SEE LEGEND ON S601 FOR SYMBOLS AND ABBREVIATIONS.
13. WOOD SHEATHING APPLIED ON OUTSIDE FACE OF ALL EXTERIOR WALLS.
14. WALLS TO BE PLATFORM FRAMED PER DETAIL 9/S514. MAXIMUM HEIGHT OF EACH PLATFORM LEVEL IS 10'-0".

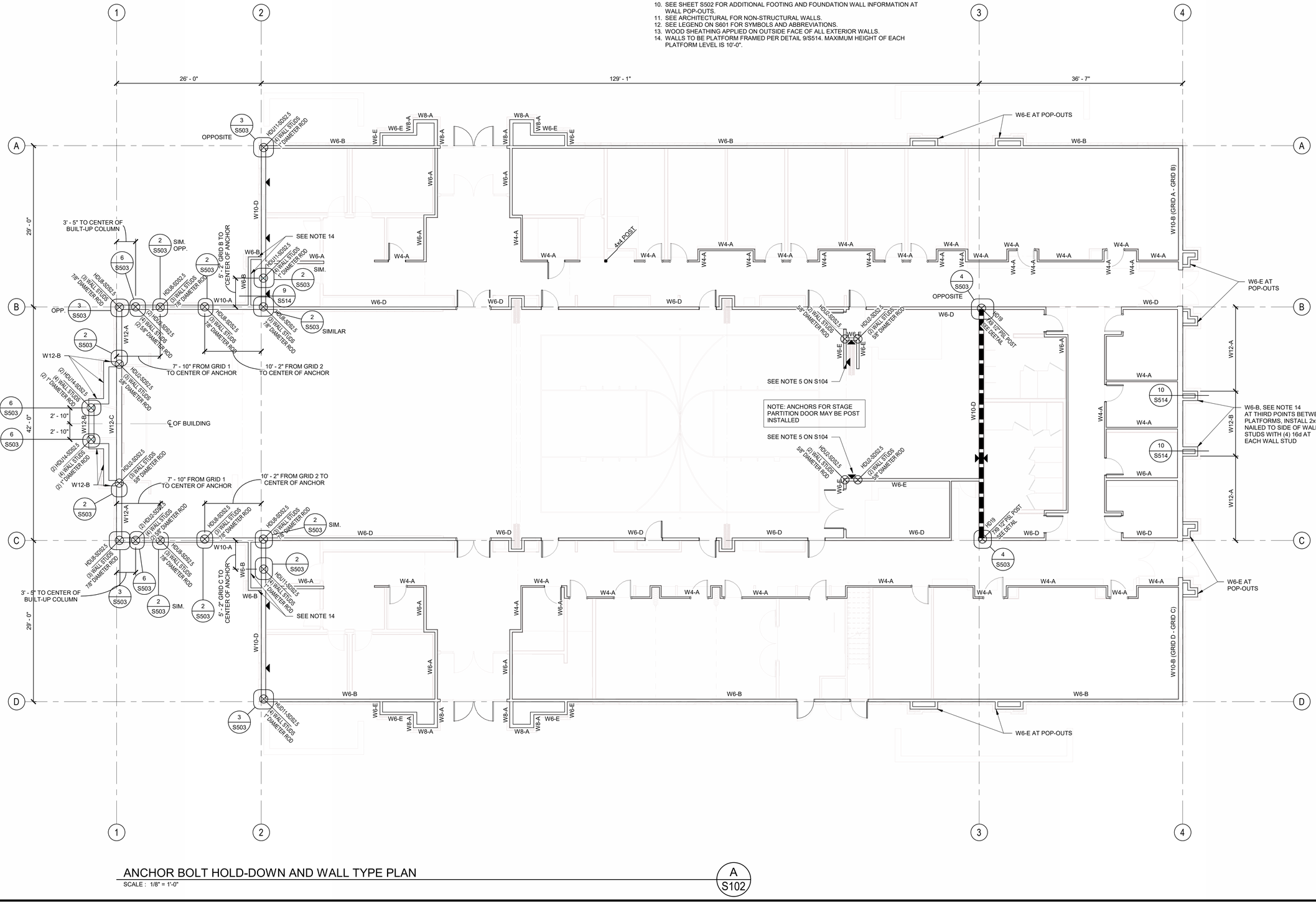

ANCHOR BOLT HOLD-DOWN AND WALL TYPE PLAN

SCALE : 1/8" = 1'-0"

A / S102

8/15/2024 11:25:42 AM

bhd ARCHITECTS
www.bhdarchitects.com
Phone 801.571.0010
Fax 801.571.0303
Toll Free 888.571.0010
65 East Wadsworth Park Drive
Suite 205 Draper, Utah 84020

Matthew C. McBride No. 353893 8/14/24 STATE OF UTAH

THE CHURCH OF JESUS CHRIST OF LATTER-DAY SAINTS

Springwater 9
Vineyard UT Springwater Stake

Approx. 542 South Geneva Road
Vineyard, Utah 84059

Owner #: 502-2004
Plan Series: G300-MH-11
County Parcel: 39-228-0001
BHD #: 2346
Date: 15 Aug 2024

Drawing Issue and Revision Schedule

#	Date	Description
1	15 Aug 2024	Bid Documents

ANCHOR BOLT HOLDOWN AND WALL TYPE PLAN

S102

ROSTRUM FRAMING AND PLATFORM FRAMING PLAN NOTES:

1. SEE FRAMING SCHEDULES ON SHEET S604 FOR FLOOR SHEATHING AND NAILING REQUIREMENTS.
2. SEE ARCHITECTURAL FOR DIMENSIONS AND ELEVATIONS.

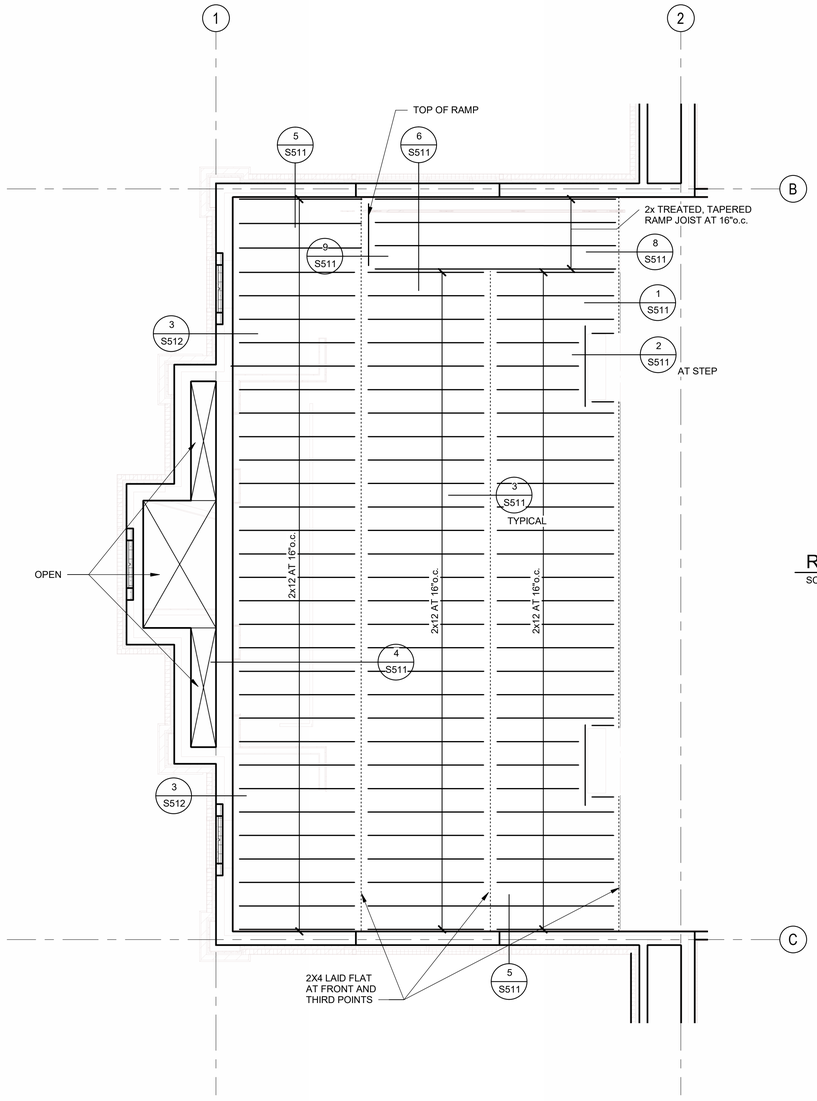

ROSTRUM FRAMING PLAN 1
SCALE : 1/4" = 1'-0"
A1 S103

ROSTRUM LOADING	
DEAD LOAD	= 15 psf
LIVE LOAD	= 100 psf
TOTAL LOAD	= 115 psf

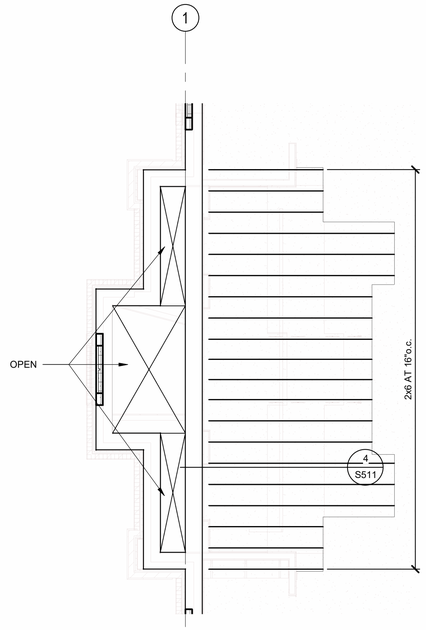

ROSTRUM FRAMING PLAN 2
SCALE : 1/4" = 1'-0"
A2 S103

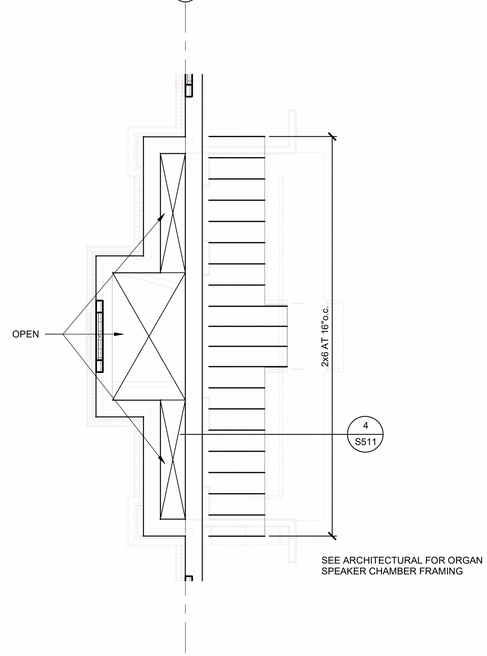

ROSTRUM FRAMING PLAN 3
SCALE : 1/4" = 1'-0"
A3 S103

8/15/2024 11:25:44 AM

bhd ARCHITECTS
www.bhdarchitects.com
Phone 801.571.0010
Fax 801.571.0303
Toll Free 888.571.0010
65 East Wadsworth Park Drive
Suite 205 Draper, Utah 84020

Matthew C. McBride No. 353893 8/14/24 STATE OF UTAH

THE CHURCH OF JESUS CHRIST OF LATTER-DAY SAINTS

Springwater 9
Vineyard UT Springwater Stake

Approx. 540 South Geneva Road
Vineyard, Utah 84059

BHD #: 2346
County Parcel: 39-228:0001
Plan Series: G300-MH-11
Owner #: 502-2004
Date: 15 Aug 2024

Drawing Issue and Revision Schedule

#	Date	Description
1	15 Aug 2024	Bid Documents

ROSTRUM FRAMING AND PLATFORM FRAMING PLANS

S103

EQUIPMENT PLATFORM FRAMING PLAN NOTES

1. SEE FRAMING SCHEDULES ON SHEET S604 FOR FLOOR SHEATHING AND NAILING REQUIREMENTS.
2. SEE ARCHITECTURAL FOR DIMENSIONS AND ELEVATIONS.
3. (3) TOP PLATES TO BE CONTINUOUS THROUGH OPENING. SEE DETAIL 5/S512.
4. CONTRACTOR TO REFER TO THE ELECTRICAL DRAWINGS TO COORDINATE FRAMING LAYOUT WITH THE LIGHTING LAYOUT.
5. SHEATH INSIDE OF WALL BETWEEN BEAMS FOR STABILITY OF BEAMS ABOVE.
6. WHERE DUCTING PENETRATES A BEARING WALL, USE DETAIL 11/S514.

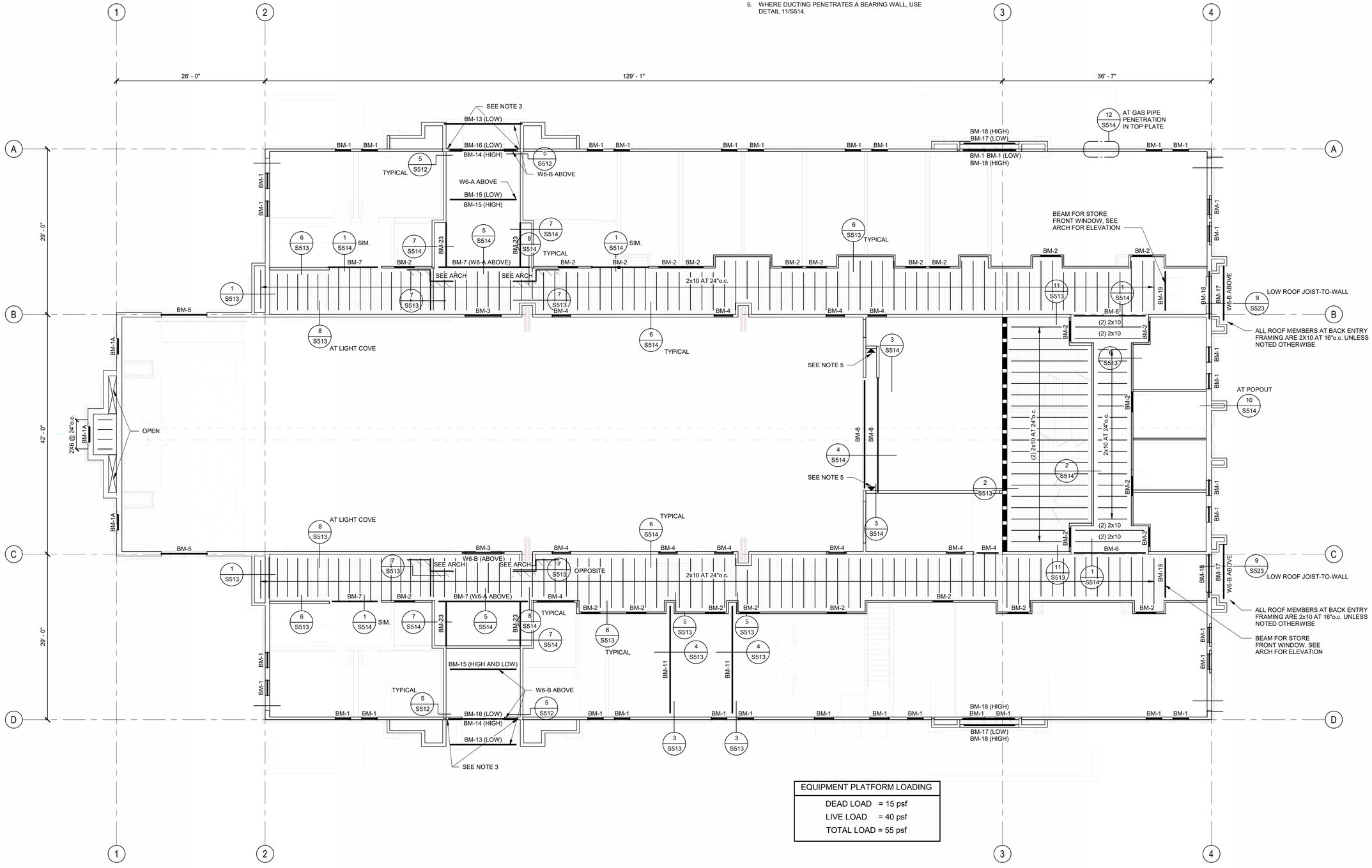

EQUIPMENT PLATFORM LOADING
DEAD LOAD = 15 psf
LIVE LOAD = 40 psf
TOTAL LOAD = 55 psf

EQUIPMENT PLATFORM FRAMING PLAN
SCALE : 1/8" = 1'-0"

A
S104

8/15/2024 11:25:47 AM

bhd ARCHITECTS
www.bhdarchitects.com
Phone 801.571.0010
Fax 801.571.0303
Toll Free 888.571.0010
65 East Wadsworth Park Drive
Suite 205 Draper, Utah 84020

Matthew C. McBride
No. 353893
8/14/24
STATE OF UTAH

THE CHURCH OF JESUS CHRIST OF LATTER-DAY SAINTS

Springwater 9
Vineyard UT Springwater Stake
Approx. 542 South Geneva Road
Vineyard, Utah 84059

Owner #: 502-2004
Plan Series: G300-MH-11
County Parcel: 39-228-0001
BHD #: 2346
Date: 15 Aug 2024

Drawing Issue and Revision Schedule

#	Date	Description
1	15 Aug 2024	Bid Documents

EQUIPMENT PLATFORM FRAMING PLAN

S104

ROOF FRAMING PLAN NOTES:

1. SEE DETAIL 1/S521 FOR TYPICAL TOP PLATE SPLICE DETAIL.
2. SEE DETAIL 2/S521 FOR TOP PLATE SPLICE SCHEDULE FOR PIPES THAT PENETRATE TOP PLATES.
3. SEE DETAILS 3/S521 AND 4/S521 FOR WALL PENETRATIONS.
4. SEE WOOD BEAM SCHEDULE ON S603 FOR BUILT-UP BEAM DETAIL.
5. SEE SCHEDULE ON SHEETS S603 AND S604 FOR WALL, ROOF, FLOOR SHEATHING AND NAILING REQUIREMENTS.
6. SEE ARCHITECTURAL PLANS FOR ROOF AND BEARING ELEVATIONS.
7. FOR UNMARKED INTERIOR HEADERS, USE (3) 2X6 FOR 2X6 WALLS AND (2) 2X6 FOR 2X4 WALLS. USE (1) BEARING AND (1) KING STUD.
8. SEE DETAILS 6/S521, 7/S521, AND 9/S521 FOR BRACING AT NON-STRUCTURAL WALLS.
9. ALL TRUSSES SPACED AT 2'-0"o.c.
10. ADD 750# POINT LOAD TO EACH OF (6) TRUSSES SUPPORTING BASKETBALL STANDARD.
11. (2) 2X12 x 12'-0" LONG SUPPORTS WITH (2) 19/32" WOOD FILLERS.
12. GIRDER TRUSS PER MANUFACTURER, SEE TRUSS PROFILE ON TRUSS SHEETS, FOR LOADING DIAGRAMS PER MARK. PROVIDE ONE BEARING STUD PER PLY UNDER TRUSS AT BEARING LOCATIONS.
13. [ ] TYPE 1 BLOCKED DIAPHRAGM, SEE SCHEDULE E/S604.
14. 2-PLY MINIMUM DRAG TRUSS. TRUSS MANUFACTURER FOR DESIGN TRUSS FOR 320 PLF ASD TOP CHORD AXIAL. ALIGN FACE OF 2-PLY TRUSS ON INTERIOR FACE OF STUD WALL ON GRID 2.
15. TOP PLATE NOT CONTINUOUS THROUGH PARTITION DOOR POCKET.

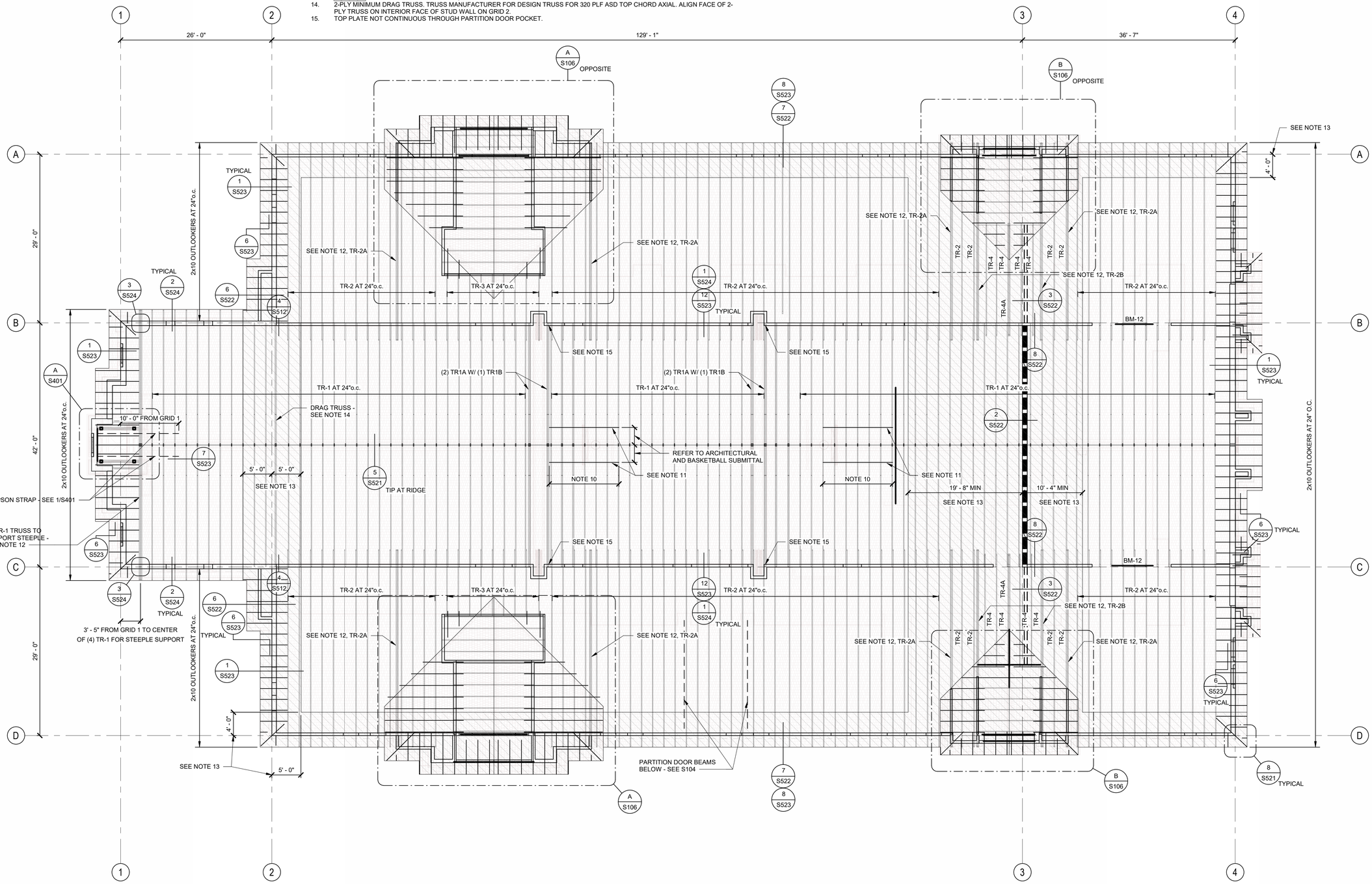

ROOF PLAN
SCALE : 1/8" = 1'-0"

A S105

8/15/2024 11:25:50 AM

bhd ARCHITECTS
www.bhdarchitects.com
Phone 801.571.0010
Fax 801.571.0303
Toll Free 888.571.0010
65 East Wadsworth Park Drive
Suite 205 Draper, Utah 84020

STATE OF UTAH — Matthew C. McBride — No. 353893 — 8/14/24

THE CHURCH OF JESUS CHRIST OF LATTER-DAY SAINTS

Springwater 9
Vineyard UT Springwater Stake
Approx. 542 South Geneva Road
Vineyard, Utah 84059

Owner #: 502-2004
Plan Series: G300-WH-11
County Parcel: 39-228:0001
BHD #: 2346
Date: 15 Aug 2024

Drawing Issue and Revision Schedule

#	Date	Description
1	15 Aug 2024	Bid Documents

ROOF FRAMING PLAN

S105

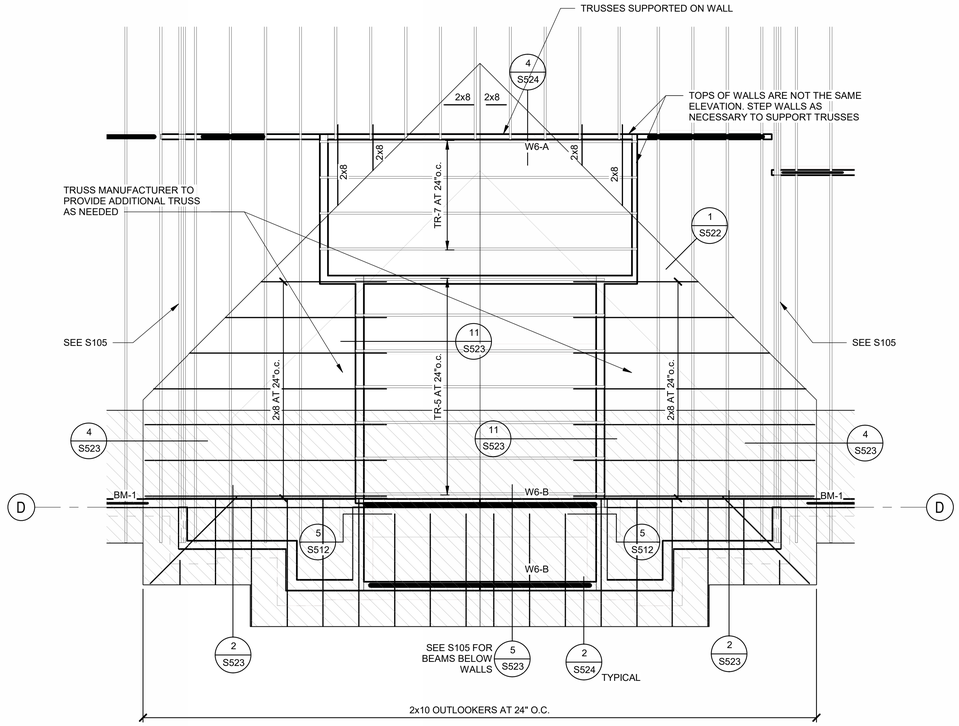

ENLARGED ROOF FRAMING PLAN

SCALE : 1/4" = 1'-0"

A
S106

ENLARGED ROOF FRAMING PLAN NOTES:

1. SEE S105 FOR ROOF FRAMING NOTES, ROOF LOADING TABLE, AND ADDITIONAL FRAMING INFORMATION

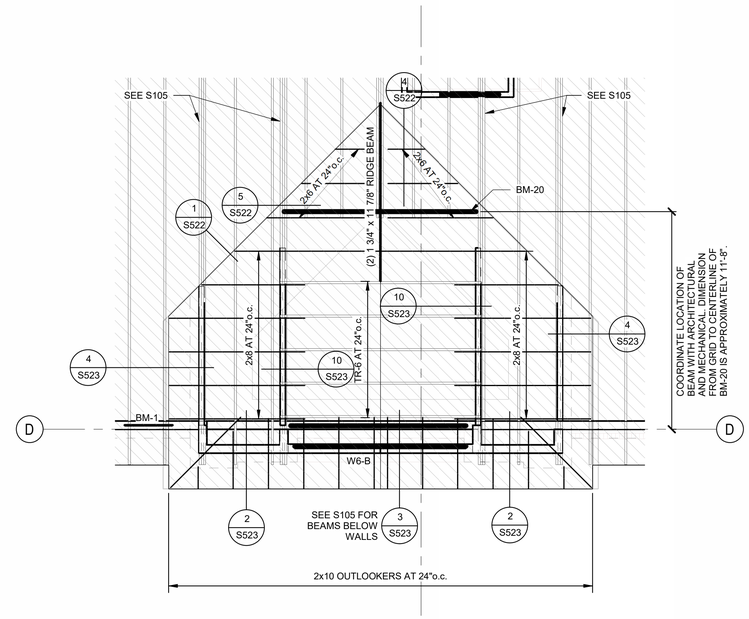

ENLARGED ROOF FRAMING PLAN

SCALE : 1/4" = 1'-0"

B
S106

bhd ARCHITECTS
www.bhdarchitects.com
Phone 801.571.0010
Fax 801.571.0303
Toll Free 888.571.0010
65 East Wadsworth Park Drive
Suite 205 Draper, Utah 84020

PROFESSIONAL ENGINEER
Matthew C. McBride
No. 353893
8/14/24
STATE OF UTAH

THE CHURCH OF JESUS CHRIST OF LATTER-DAY SAINTS

Springwater 9
Vineyard UT Springwater Stake

Approx. 542 South Geneva Road
Vineyard, Utah 84059

Owner #: 502-2004
Plan Series: G300-MH-11
County Parcel: 39-228-0001
BHD #: 2346
Date: 15 Aug 2024

Drawing Issue and Revision Schedule

#	Date	Description
1	15 Aug 2024	Bid Documents

ENLARGED ROOF FRAMING PLANS

S106

8/15/2024 11:25:52 AM

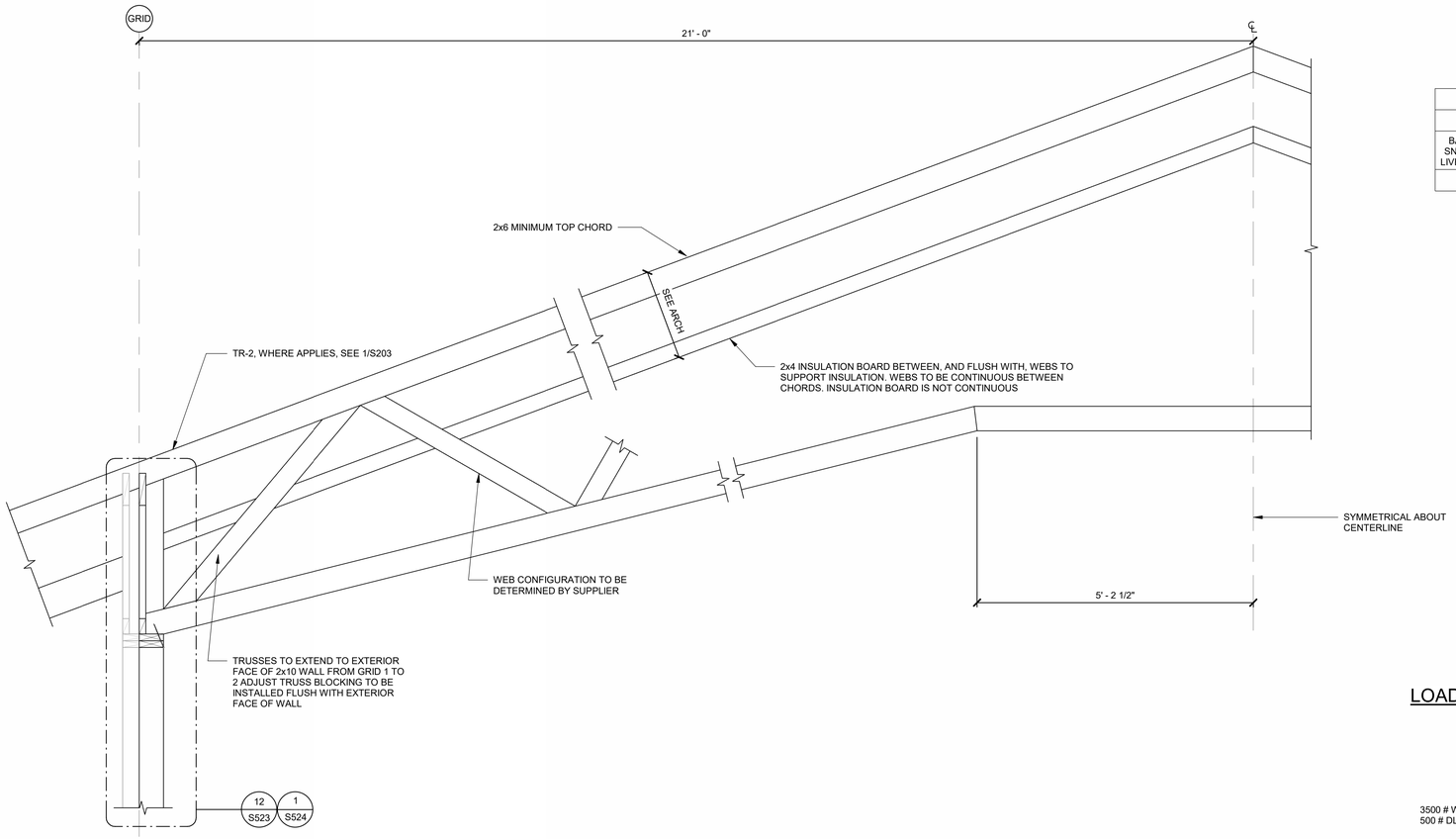

TR-1 TRUSS ELEVATION

SCALE : NONE

1
S201

TR-1 TRUSS LOADS (ASD)					
A	B	C	D	E	F
BALANCED SNOW/ROOF LIVE LOAD (plf)	TOP CHORD DEAD LOAD (plf)	WINDWARD LOAD (plf)	LEEWARD LOAD (plf)	LEEWARD EXTENT (FT'-IN" LOAD (plf)	BOTTOM CHORD LOAD (plf)
66	30	20	41	7'-6"	10

TR-1 TRUSS NOTES:

1. SEE S201 FOR GENERAL TRUSS NOTES.
2. TR-1 WIND LOADS ARE ASD LOADS.
3. SEISMIC LOADS DO NOT CONTROL DESIGN.
4. TRUSS TO BE (4) PLY AT STEEPLE SUPPORT.
5. TOP CHORD AT (4) PLY TRUSS AT STEEPLE TO BE 2x10.
6. LOAD DIAGRAMS 3,4,5,6, AND 7 APPLY TO TRUSSES AT STEEPLE SUPPORT.
7. ADD 750# POINT LOAD TO EACH TRUSS SUPPORTING BASKETBALL STANDARD. SEE S105 AND ARCHITECTURAL.

TR-1 LOAD COMBINATIONS

TYPICAL TRUSS:
COMBINATION LOAD 1: LOAD DIAGRAMS 1,8
COMBINATION LOAD 2: LOAD DIAGRAMS 2,8

STEEPLE TRUSS:
COMBINATION LOAD 1: LOAD DIAGRAMS 1,3,8
COMBINATION LOAD 2: LOAD DIAGRAMS 1,4,8
COMBINATION LOAD 3: LOAD DIAGRAMS 1,5,8
COMBINATION LOAD 4: LOAD DIAGRAMS 1,6,8
COMBINATION LOAD 5: LOAD DIAGRAMS 1,7,8
COMBINATION LOAD 6: LOAD DIAGRAMS 2,3,8
COMBINATION LOAD 7: LOAD DIAGRAMS 2,4,8
COMBINATION LOAD 8: LOAD DIAGRAMS 2,5,8
COMBINATION LOAD 9: LOAD DIAGRAMS 2,6,8
COMBINATION LOAD 10: LOAD DIAGRAMS 2,7,8

TR-1 LOAD DIAGRAMS

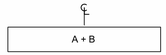

LOAD DIAGRAM 1 - TOP CHORD

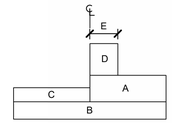

LOAD DIAGRAM 2 - TOP CHORD

NOTE: TRUSS TO SUPPORT LOADS AS SHOWN AND AS MIRRORED.

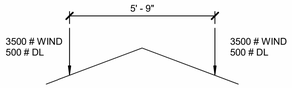

LOAD DIAGRAM 3 - TOP CHORD

WIND IN LONG DIRECTION

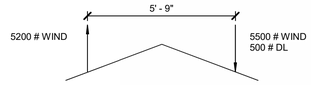

LOAD DIAGRAM 4 - TOP CHORD

NOTE: TRUSS TO SUPPORT LOADS AS SHOWN AND AS MIRRORED.
WIND IN SHORT DIRECTION

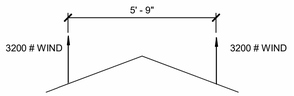

LOAD DIAGRAM 5 - TOP CHORD

WIND IN LONG DIRECTION

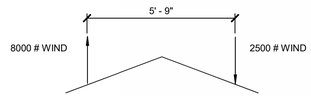

LOAD DIAGRAM 6 - TOP CHORD

NOTE: TRUSS TO SUPPORT LOADS AS SHOWN AND AS MIRRORED.
WIND DIAGONAL

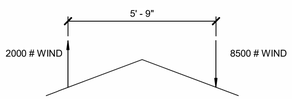

LOAD DIAGRAM 7 - TOP CHORD

NOTE: TRUSS TO SUPPORT LOADS AS SHOWN AND AS MIRRORED.
WIND DIAGONAL

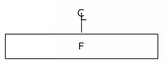

LOAD DIAGRAM 8 - BOTTOM CHORD

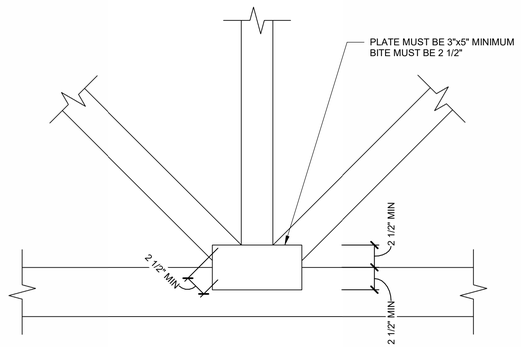

TYPICAL GUSSET TO TRUSS SCHEMATIC

SCALE : NONE

2
S201

GENERAL TRUSS NOTES

1. TRUSS WEBS ARE NOT SHOWN, SEE TRUSS SUPPLIER DRAWINGS FOR TRUSS CONFIGURATION.
2. 2x4 MEMBERS SUPPORTING INSULATION MAY BE ATTACHED TO THE TRUSS WEB MEMBERS USING PRESS PLATES, STAPLES, OR TOE NAILS DESIGNED TO SUPPORT THE INSULATION AND HANGING LOADS. PRESS PLATES FOR INSULATION SUPPORT DO NOT NEED TO BE OVERSIZED PER CHURCH SPECIFICATION.
3. LOAD COMBINATIONS SHOWN ARE IN ADDITION TO THE IBC WIND AND SEISMIC LOAD COMBINATIONS. ALL TRUSSES SHALL BE DESIGNED PER LOAD COMBINATIONS SPECIFIED IN IBC SECTION 1605. WIND LOADS LISTED ARE ASD LOADS.
4. FRAMER TO INCLUDE AN ALLOWANCE FOR TRUSS BRACING THAT WILL BE DESIGNED BY THE TRUSS MANUFACTURER.
5. LIMIT TOTAL LOAD DEFLECTION TO L/240. LIMIT LIVE LOAD DEFLECTION TO L/360.
6. SPLICES IN TOP AND BOTTOM CHORDS TO OCCUR AT TRUSS JOINTS.
7. INSTALL ERECTION AND PERMANENT TRUSS BRIDGING AND BRACING AS REQUIRED BY THE TRUSS INSTITUTE AND AS SHOWN IN THE TRUSS SHOP DRAWINGS.
8. UNLESS A MORE STRINGENT FASTENING SCHEDULE IS PROVIDED BY THE TRUSS MANUFACTURER OR ELSEWHERE IN THESE DOCUMENTS, THE FOLLOWING IS TO BE USED FOR FASTENING MULTI-PLY TRUSSES TOGETHER:
   a. TRUSSES OF 4 OR MORE PLIES ARE TO BE CONNECTED TOGETHER USING 1/2" DIAMETER BOLTS AT 32"o.c. OR EQUAL. USE AT ALL MEMBERS.
   b. TRUSSES OF 3 OR LESS PLIES ARE TO BE CONNECTED TOGETHER USING 10d COMMON NAILS AT 9"o.c. STAGGERED TOP TO BOTTOM OF TRUSS MEMBERS OR EQUAL (9"o.c. SPACING AT TOP AND AT BOTTOM OF TRUSS MEMBERS). USE AT ALL MEMBERS.
9. TRUSS MANUFACTURER TO FASTEN MULTI-PLY TRUSSES PRIOR TO DELIVERY OF TRUSSES TO SITE.
10. SEE THE ARCHITECTURAL DRAWINGS FOR GEOMETRY INFORMATION NOT SHOWN.

bhd ARCHITECTS
www.bhdarchitects.com
Phone 801.571.0010
Fax 801.571.0303
Toll Free 888.571.0010
65 East Wadsworth Park Drive
Suite 205 Draper, Utah 84020



THE CHURCH OF JESUS CHRIST OF LATTER-DAY SAINTS

Springwater 9
Vineyard UT Springwater Stake

Approx. 542 South Geneva Road
Vineyard, Utah 84059

BHD #: 2346
County Parcel: 39-228-0001
Plan Series: G300-MH-11
Owner #: 502-2004
Date: 15 Aug 2024

Drawing Issue and Revision Schedule

#	Date	Description
1	15 Aug 2024	Bid Documents

TRUSS ELEVATIONS

S201

8/15/2024 11:25:53 AM

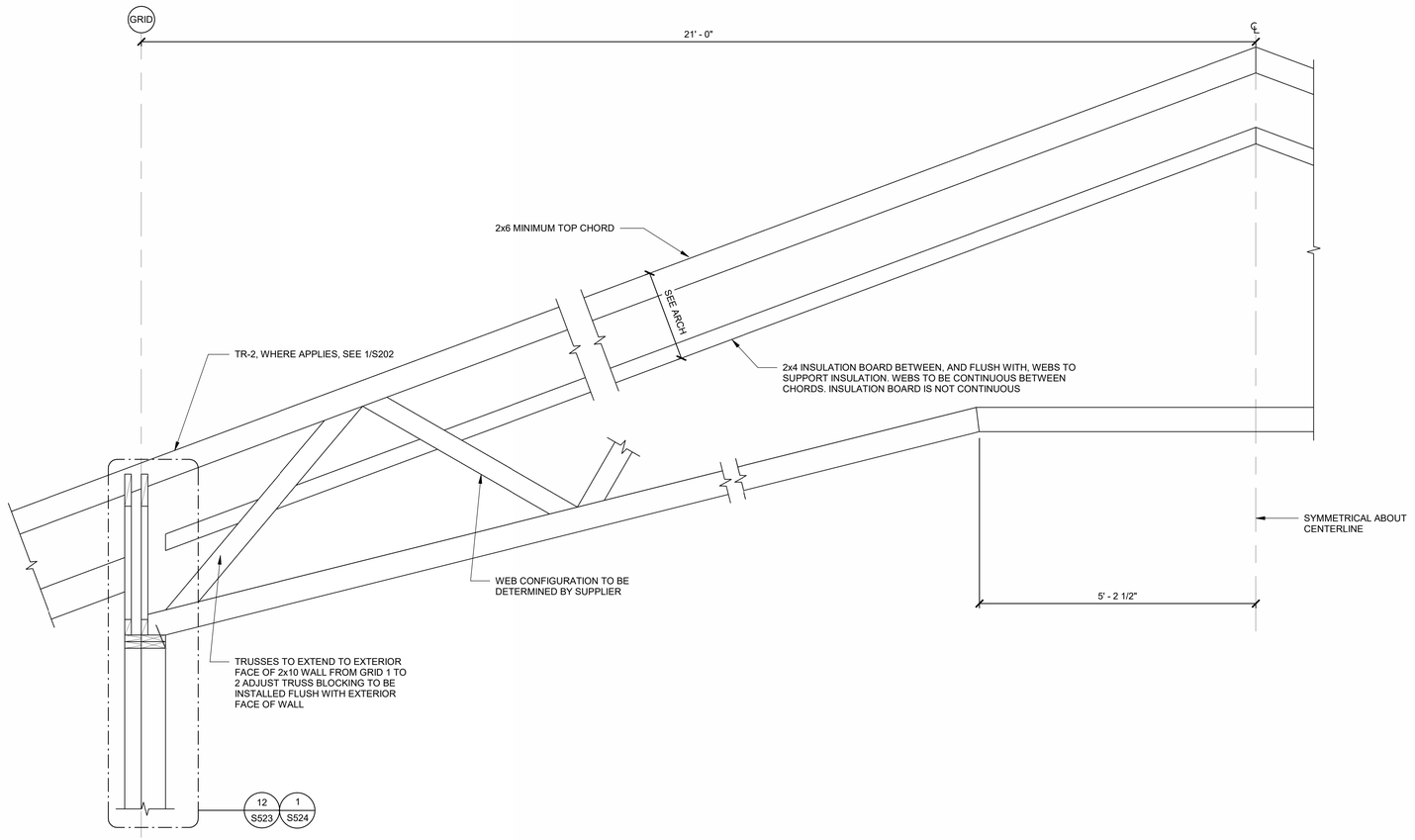

TR-1A TRUSS ELEVATION
SCALE : NONE

1
S202

TR-1A TRUSS NOTES:

1. SEE S201 FOR GENERAL TRUSS NOTES.
2. SEISMIC LOADS DO NOT CONTROL DESIGN.
3. LOAD DIAGRAMS 8 AND 9 APPLY TO TR-1A AT FOLDING PARTITION DOORS.
4. AT FOLDING PARTITION TRUSSES, LIMIT TOTAL LOAD DEFLECTION TO L/240, LIMIT LIVE LOAD DEFLECTION TO L/360, AND A MAXIMUM DEFLECTION OF 1/2" UNDER EITHER TOTAL LOAD OR LIVE LOAD.

TR-1A LOAD COMBINATIONS

COMBINATION LOAD 1: LOAD DIAGRAMS 1,3
COMBINATION LOAD 2: LOAD DIAGRAMS 2,3
COMBINATION LOAD 1: LOAD DIAGRAMS 1,4,3
COMBINATION LOAD 2: LOAD DIAGRAMS 1,5,3
COMBINATION LOAD 3: LOAD DIAGRAMS 2,4,3
COMBINATION LOAD 4: LOAD DIAGRAMS 2,5,3

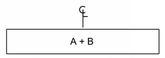

LOAD DIAGRAM 1 - TOP CHORD

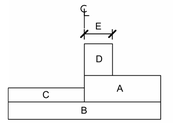

LOAD DIAGRAM 2 - TOP CHORD

NOTE: TRUSS TO SUPPORT LOADS AS SHOWN AND AS MIRRORED.

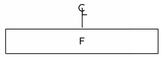

LOAD DIAGRAM 3 - BOTTOM CHORD



LOAD DIAGRAM 4 - BOTTOM CHORD

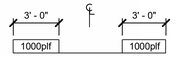

LOAD DIAGRAM 5 - BOTTOM CHORD

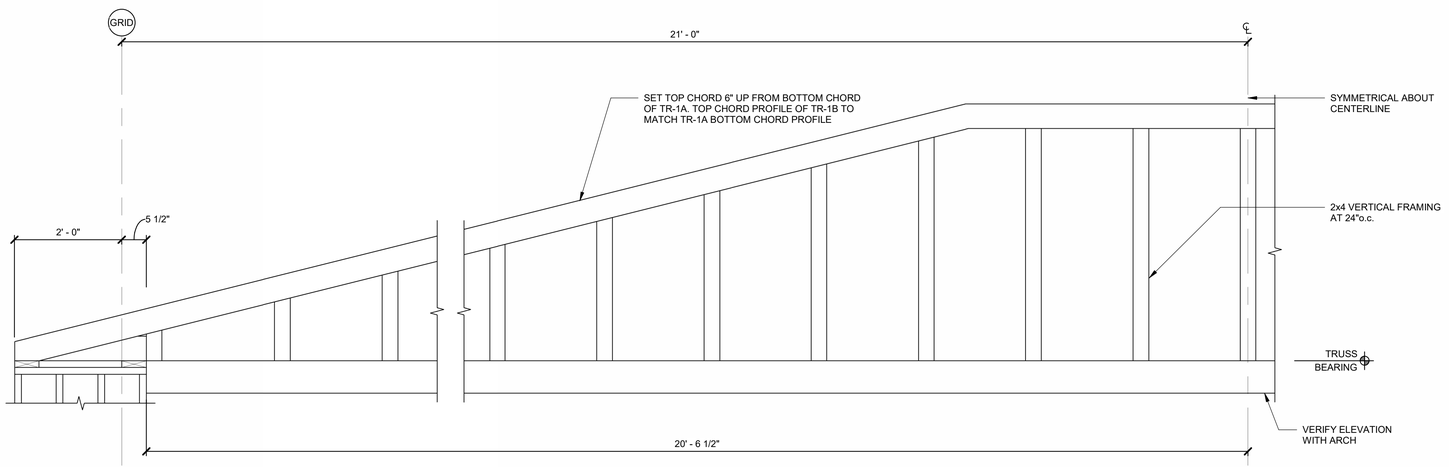

TR-1B TRUSS ELEVATION
SCALE : NONE

2
S202

TR-1B NOTES:

1. SEE 1/S201 FOR GENERAL TRUSS NOTES.
2. TR-1B HAS NO APPLIED GRAVITY LOADS AND DOES NOT SUPPORT INSULATION.
3. SEE 11/S522 FOR SCHEMATIC FRAMING OF TR-1B TO TR-1A.

bhd ARCHITECTS
www.bhdarchitects.com
Phone 801.571.0010
Fax 801.571.0303
Toll Free 888.571.0010
65 East Wadsworth Park Drive
Suite 205 Draper, Utah 84020

Matthew C. McBride
No. 353893
8/14/24
STATE OF UTAH

THE CHURCH OF JESUS CHRIST OF LATTER-DAY SAINTS

Springwater 9
Vineyard UT Springwater Stake

Approx. 542 South Geneva Road
Vineyard, Utah 84059

Plan Series: G300-MH-11
Owner #: 502-2004
County Parcel: 39-228-0001
BHD #: 2346
Date: 15 Aug 2024

Drawing Issue and Revision Schedule

#	Date	Description
1	15 Aug 2024	Bid Documents

TRUSS ELEVATIONS

S202

8/15/2024 11:25:54 AM

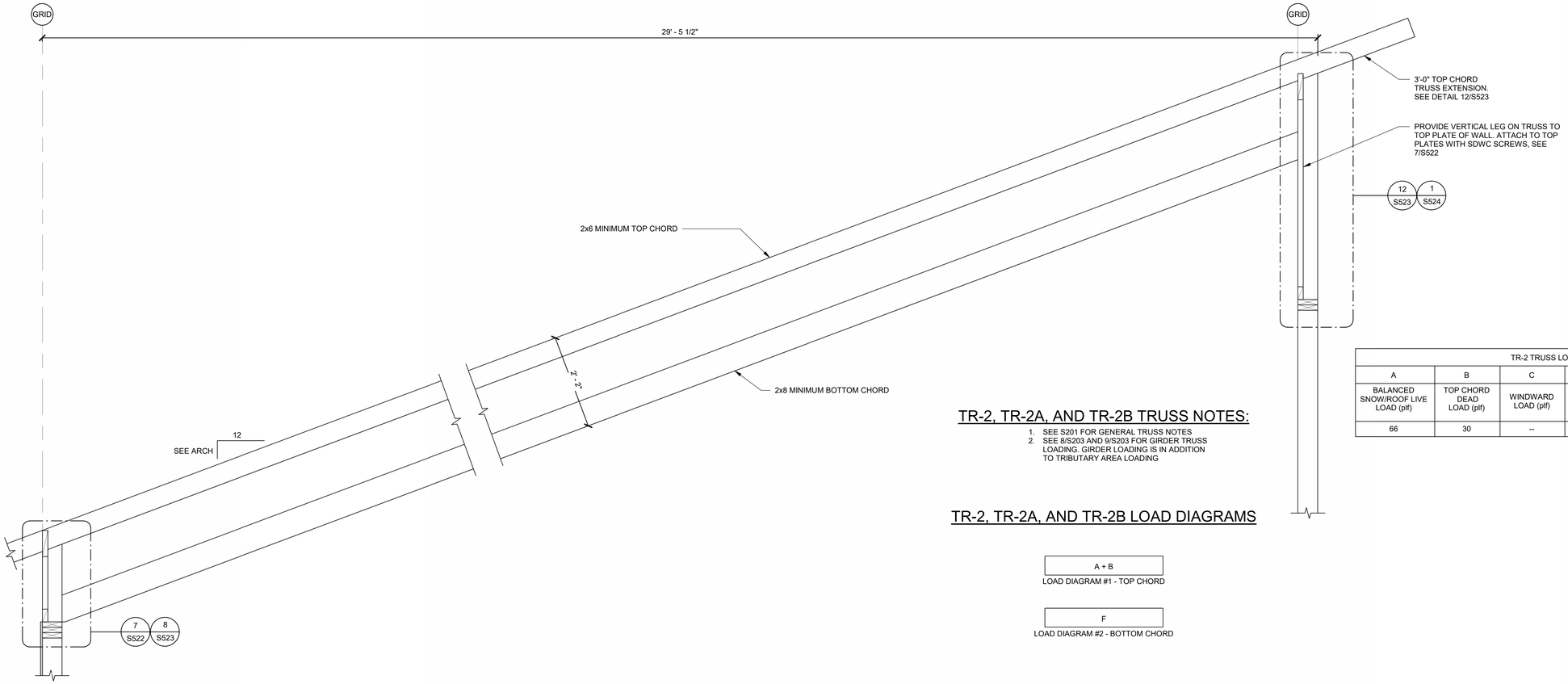

TR-2 TRUSS LOADS (ASD)					
A	B	C	D	E	F
BALANCED SNOW/ROOF LIVE LOAD (plf)	TOP CHORD DEAD LOAD (plf)	WINDWARD LOAD (plf)	LEEWARD LOAD (plf)	LEEWARD EXTENT (FT'-IN" LOAD (plf)	BOTTOM CHORD LOAD (plf)
66	30	--	--	--	10

TR-2, TR-2A, AND TR-2B TRUSS NOTES:

1. SEE S201 FOR GENERAL TRUSS NOTES
2. SEE 8/S203 AND 9/S203 FOR GIRDER TRUSS LOADING. GIRDER LOADING IS IN ADDITION TO TRIBUTARY AREA LOADING

TR-2, TR-2A, AND TR-2B LOAD DIAGRAMS

A + B

LOAD DIAGRAM #1 - TOP CHORD

F

LOAD DIAGRAM #2 - BOTTOM CHORD

TR-2, TR-2A, AND TR-2B LOAD COMBINATIONS

COMBINATION LOAD 1: DIAGRAMS 1 AND 2

TR-2 TRUSS ELEVATION

SCALE : NONE

1 S203

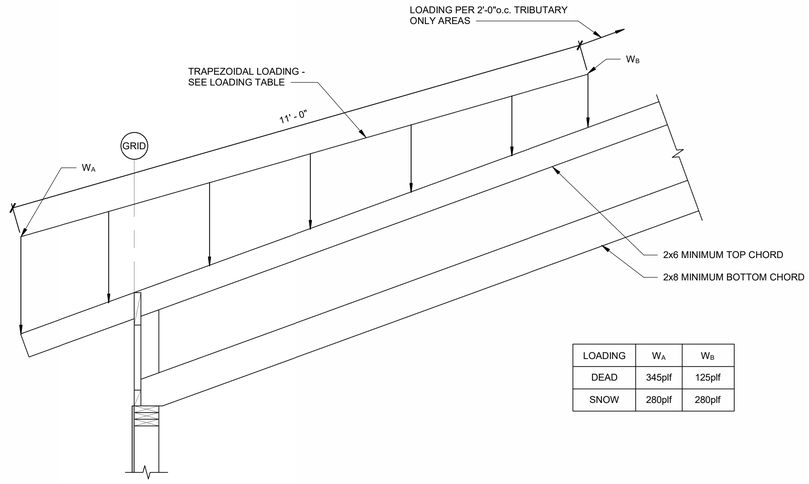

LOADING	W_A	W_B
DEAD	345plf	125plf
SNOW	280plf	280plf

GIRDER LOADING FOR TR-2A

SCALE : NONE

2 S203

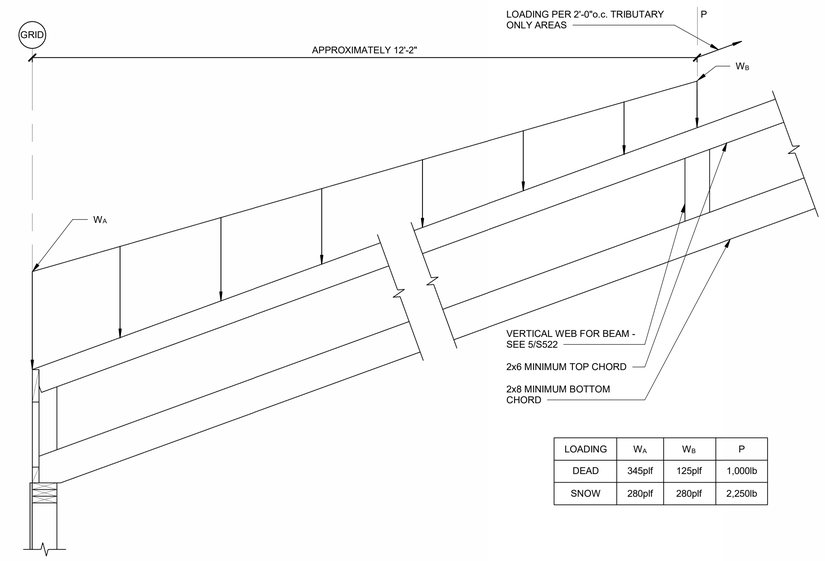

LOADING	W_A	W_B	P
DEAD	345plf	125plf	1,000lb
SNOW	280plf	280plf	2,250lb

GIRDER LOADING FOR TR-2B

SCALE : NONE

3 S203

bhd ARCHITECTS
www.bhdarchitects.com
Phone 801.571.0010
Fax 801.571.0303
Toll Free 888.571.0010
65 East Wadsworth Park Drive
Suite 205 Draper, Utah 84020



THE CHURCH OF JESUS CHRIST OF LATTER-DAY SAINTS

Springwater 9
Vineyard UT Springwater Stake

Approx. 542 South Geneva Road
Vineyard, Utah 84059

BHD #: 2346
County Parcel: 39:228:0001
Plan Series: G300-MH-11
Owner #: 502-2004
Date: 15 Aug 2024

Drawing Issue and Revision Schedule

#	Date	Description
1	15 Aug 2024	Bid Documents

TRUSS ELEVATIONS

S203

8/15/2024 11:25:55 AM

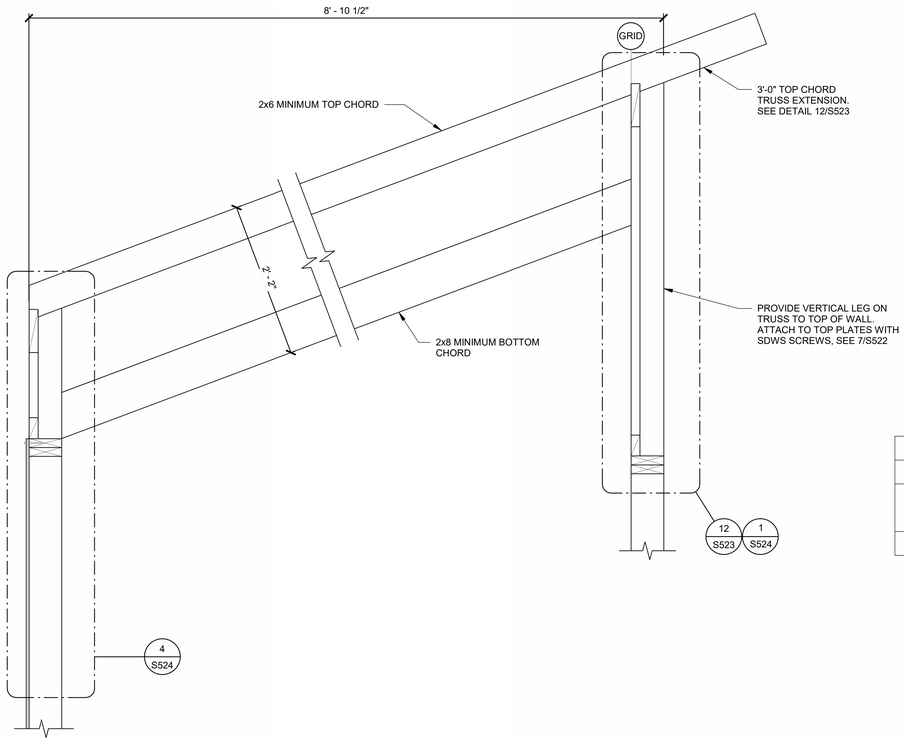

TR-3 TRUSS ELEVATION

SCALE : NONE

1
S204

TR-3 AND TR-4 LOAD DIAGRAM

A + B

LOAD DIAGRAM #1 - TOP CHORD

F

LOAD DIAGRAM #2 - BOTTOM CHORD

TR-3 AND TR-4 LOAD COMBINATIONS

COMBINATION LOAD 1: DIAGRAMS 1 AND 2

TR-3 AND TR-4 TRUSS LOADS (ASD)					
A	B	C	D	E	F
BALANCED SNOW/ROOF LIVE LOAD (plf)	TOP CHORD DEAD LOAD (plf)	WINDWARD LOAD (plf)	LEEWARD LOAD (plf)	LEEWARD EXTENT (FT'-IN" LOAD (plf)	BOTTOM CHORD LOAD (plf)
66	30	--	--	--	10

TR-3 AND TR-4 TRUSS NOTES

1. SEE S201 FOR GENERAL TRUSS NOTES.

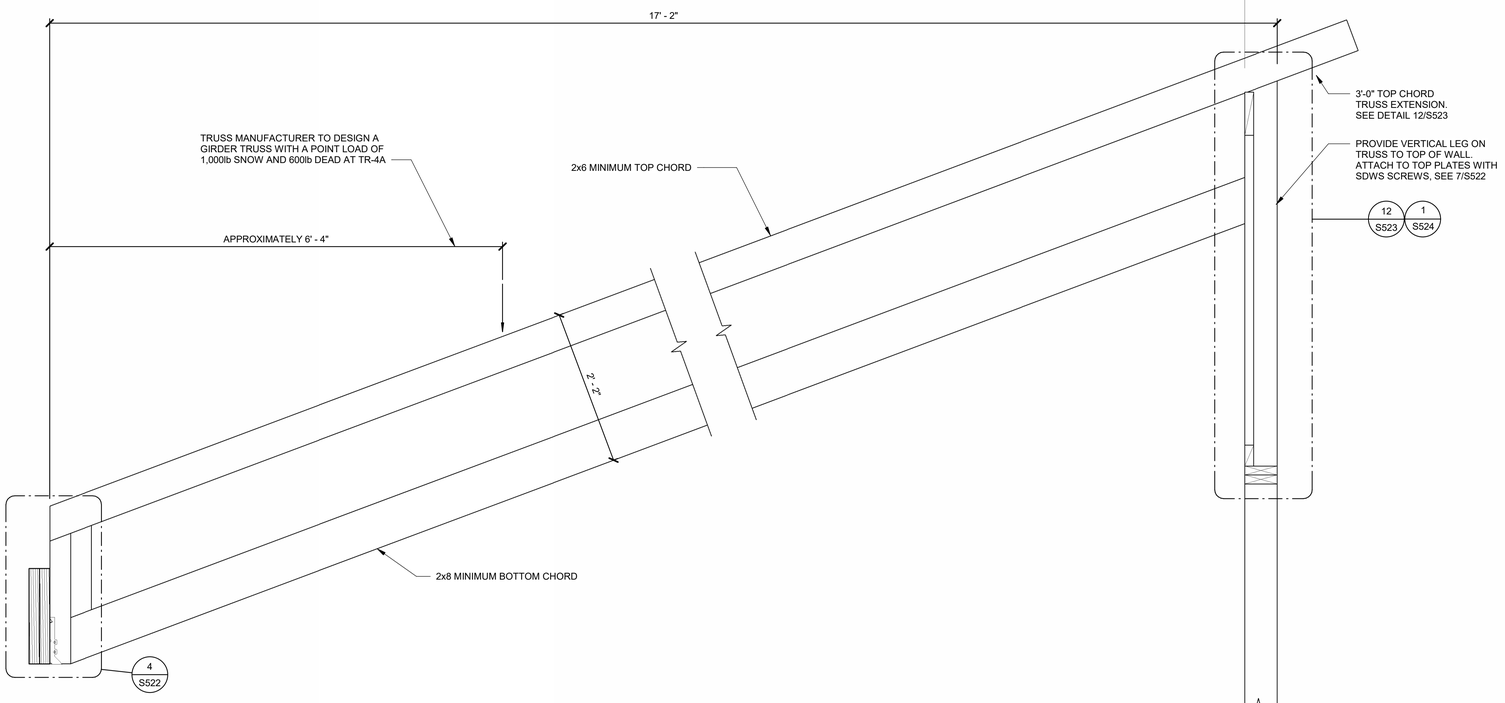

TR-4 TRUSS ELEVATION

SCALE : NONE

2
S204

bhd ARCHITECTS
www.bhdarchitects.com
Phone 801.571.0010
Fax 801.571.0303
Toll Free 888.571.0010
65 East Wadsworth Park Drive
Suite 205 Draper, Utah 84020

STATE OF UTAH
Matthew C. McBride
No. 353893
8/14/24

THE CHURCH OF JESUS CHRIST OF LATTER-DAY SAINTS

Springwater 9
Vineyard UT Springwater Stake

Approx. 542 South Geneva Road
Vineyard, Utah 84059

BHD #: 2346
County Parcel: 39:228:0001
Plan Series: G300-MH-11
Owner #: 502-2004
Date: 15 Aug 2024

Drawing Issue and Revision Schedule

#	Date	Description
1	15 Aug 2024	Bid Documents

TRUSS ELEVATIONS

S204

8/15/2024 11:25:57 AM

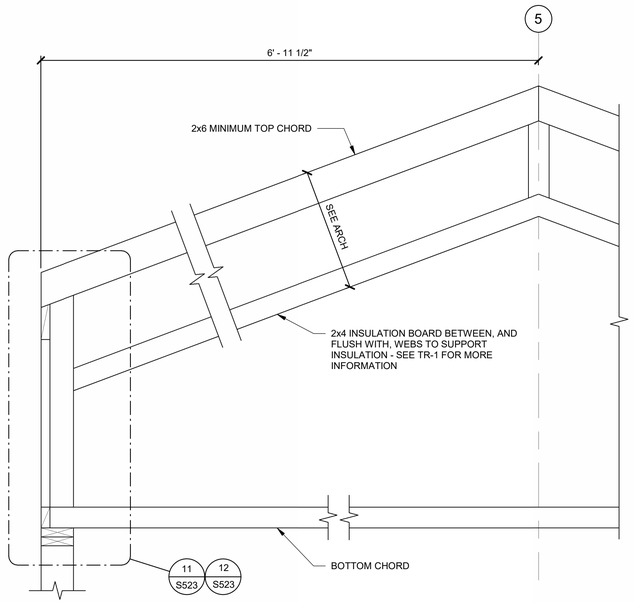

TR-5 TRUSS ELEVATION

SCALE : NONE

1 S205

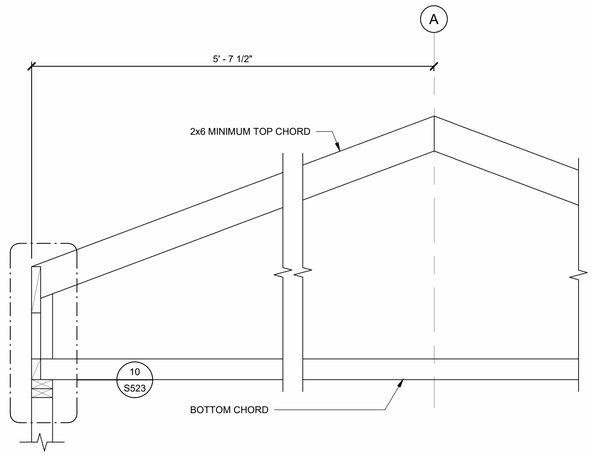

TR-6 TRUSS ELEVATION

SCALE : NONE

2 S205

TR-5, TR-6 AND TR-7 TRUSS NOTES

1. SEE S201 FOR GENERAL TRUSS NOTES

TR-5, TR-6 AND TR-7 LOAD DIAGRAM



LOAD DIAGRAM #1 - TOP CHORD

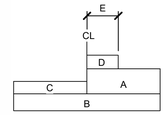

LOAD DIAGRAM #2 - TOP CHORD

NOTE: TRUSS TO SUPPORT LOADS AS SHOWN AND AS MIRRORED.



LOAD DIAGRAM #3 - BOTTOM CHORD

TR-5, TR-6 AND TR-7 LOAD COMBINATIONS

COMBINATION LOAD 1: DIAGRAMS 1,3
COMBINATION LOAD 2: DIAGRAMS 2,3

TR-5, TR-6 AND TR-7 TRUSS LOADS (ASD)					
A	B	C	D	E	F
BALANCED SNOW/ROOF LIVE LOAD (plf)	TOP CHORD DEAD LOAD (plf)	WINDWARD LOAD (plf)	LEEWARD LOAD (plf)	LEEWARD EXTENT (FT'-IN" LOAD (plf)	BOTTOM CHORD LOAD (plf)
66	30	20	40	7'-3"	10

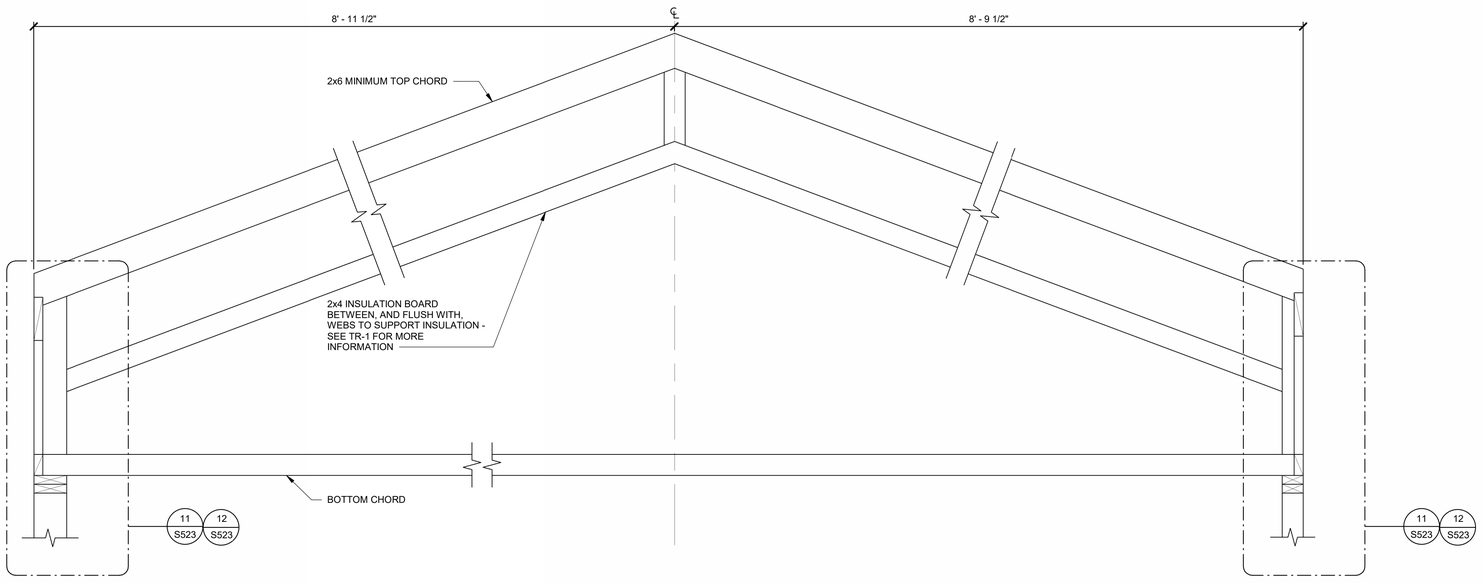

TR-7 TRUSS ELEVATION

SCALE : NONE

3 S205

bhd ARCHITECTS
www.bhdarchitects.com
Phone 801.571.0010
Fax 801.571.0303
Toll Free 888.571.0010
65 East Wadsworth Park Drive
Suite 205 Draper, Utah 84020

Matthew C. McBride No. 353893 8/14/24 STATE OF UTAH

THE CHURCH OF JESUS CHRIST OF LATTER-DAY SAINTS

Springwater 9
Vineyard UT Springwater Stake

Approx. 542 South Geneva Road
Vineyard, Utah 84059

Date: 15 Aug 2024
BHD #: 2346
County Parcel: 39-228:0001
Plan Series: G300-MH-11
Owner #: 502-2004

Drawing Issue and Revision Schedule

#	Date	Description
1	15 Aug 2024	Bid Documents

TRUSS ELEVATIONS

S205

8/15/2024 11:25:58 AM

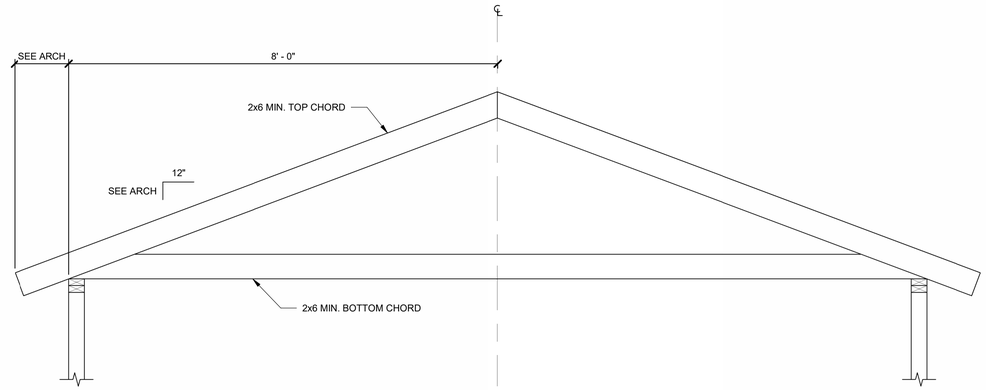

TR-8 TRUSS LOADS (ASD)					
A	B	C	D	E	F
BALANCED SNOW/ROOF LIVE LOAD (plf)	TOP CHORD DEAD LOAD (plf)	WINDWARD LOAD (plf)	LEEWARD LOAD (plf)	LEEWARD EXTENT (FT'-IN" LOAD (plf)	BOTTOM CHORD LOAD (plf)
72	30	22	42	7'-6"	10

TR- TRUSS NOTES:

1. SEE S201 FOR GENERAL TRUSS NOTES.

TR- LOAD DIAGRAMS

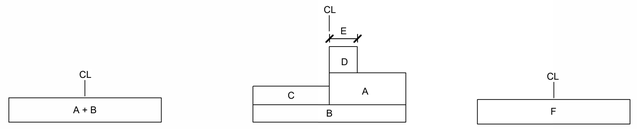

LOAD DIAGRAM 1 - TOP CHORD

LOAD DIAGRAM 2 - TOP CHORD

LOAD DIAGRAM 3 - BOTTOM CHORD

NOTE: TRUSS TO SUPPORT LOADS AS SHOWN AND AS MIRRORED.

TR- STORAGE TRUSS ELEVATION

SCALE : NONE

1
S206

bhd ARCHITECTS
www.bhdarchitects.com
Phone 801.571.0010
Fax 801.571.0303
Toll Free 888.571.0010
65 East Wadsworth Park Drive
Suite 205 Draper, Utah 84020

Matthew C. McBride
No. 353893
8/14/24
STATE OF UTAH

THE CHURCH OF
JESUS CHRIST
OF LATTER-DAY SAINTS

Springwater 9
Vineyard UT Springwater Stake

Approx. 542 South Geneva Road
Vineyard, Utah 84059

Date: 15 Aug 2024
BHD #: 2346
County Parcel: 39-228-0001
Plan Series: G300-MH-11
Owner #: 502-2004

Drawing Issue and Revision Schedule

#	Date	Description
1	15 Aug 2024	Bid Documents

TRUSS ELEVATIONS

S206

8/15/2024 11:25:59 AM

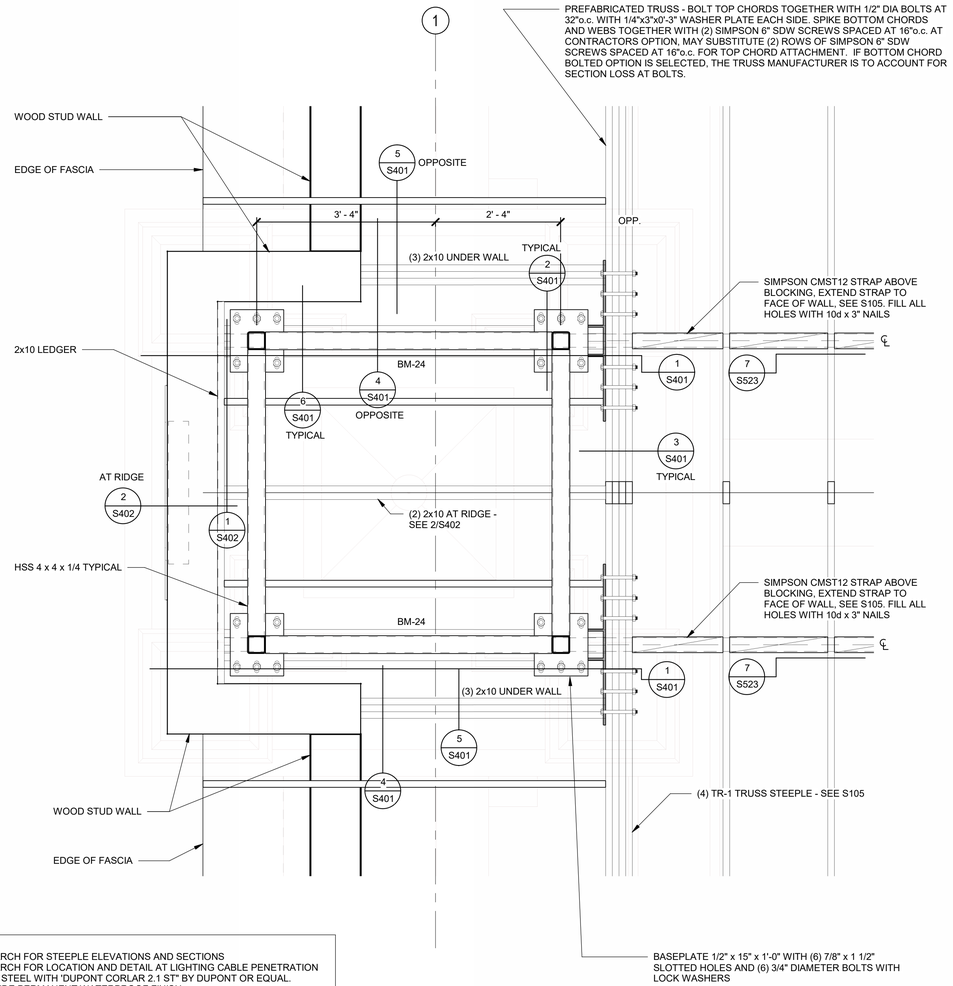

NOTES:
1. SEE ARCH FOR STEEPLE ELEVATIONS AND SECTIONS
2. SEE ARCH FOR LOCATION AND DETAIL AT LIGHTING CABLE PENETRATION
3. COAT STEEL WITH 'DUPONT CORLAR 2.1 ST' BY DUPONT OR EQUAL. PROVIDE PERMANENT WATERPROOF FINISH
4. SEE ARCHITECT FOR WALLS ABOVE

ENLARGED ROOF FRAMING PLAN
SCALE : 3/4" = 1'-0"
A S401

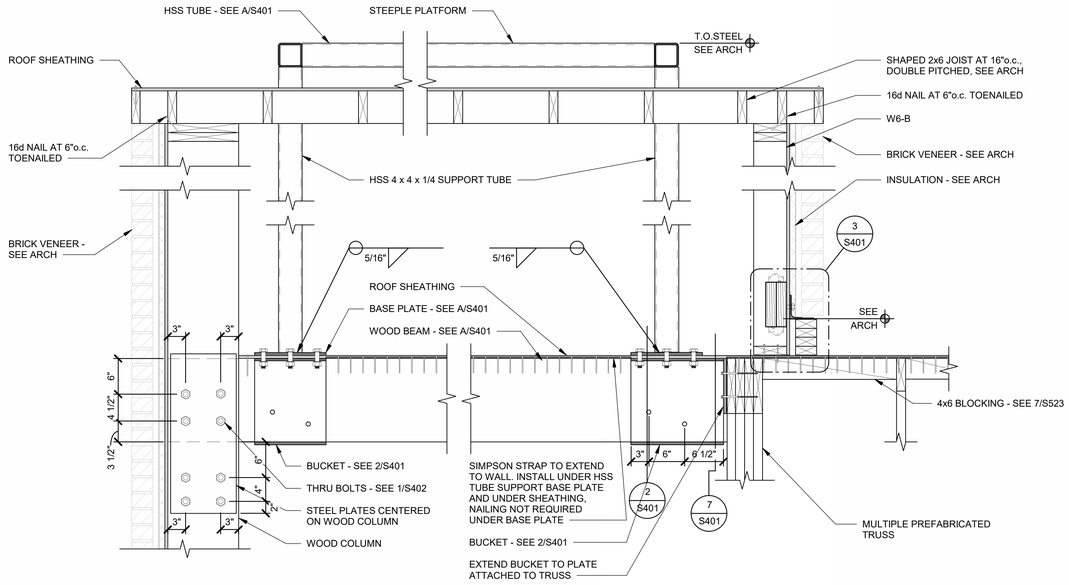

CONNECTION AT TRUSS
SCALE : NONE
1 S401

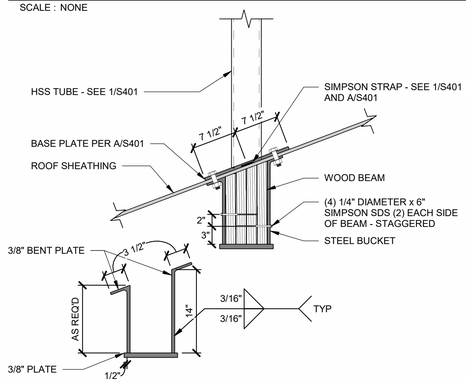

BASE PLATE CONNECTION AT WOOD BEAM
SCALE : NONE
2 S401

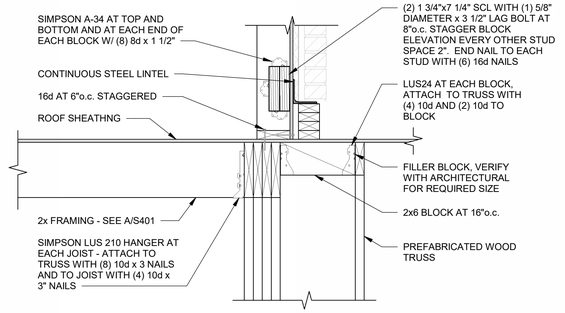

STEEPLE DETAIL AT JOIST
SCALE : NONE
3 S401

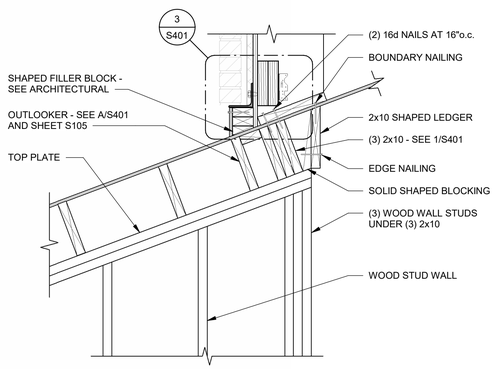

BEAM BEARING AT STEEPLE
SCALE : NONE
4 S401

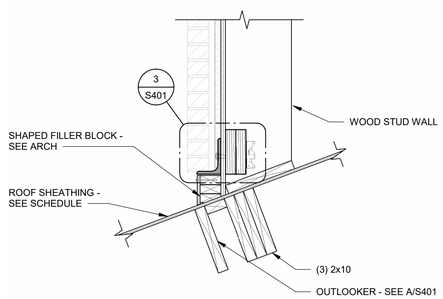

WALL DETAIL AT STEEPLE
SCALE : NONE
5 S401

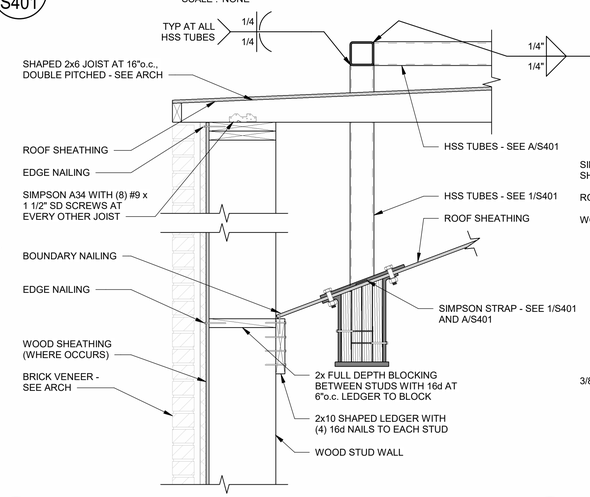

DETAIL AT STEEPLE
SCALE : NONE
6 S401

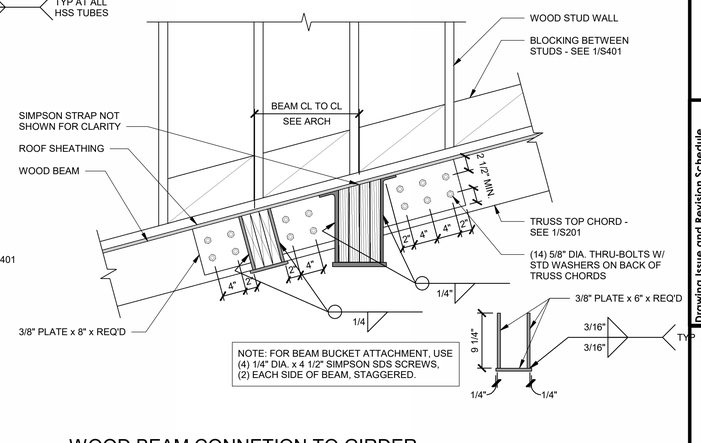

WOOD BEAM CONNETION TO GIRDER TRUSS
SCALE : NONE
7 S401

bhd ARCHITECTS
www.bhdarchitects.com
Phone 801.571.0010
Fax 801.571.0303
Toll Free 888.571.0010
65 East Wadsworth Park Drive
Suite 205 Draper, Utah 84020

STATE OF UTAH — Matthew C. McBride — No. 353893 — 8/14/24

THE CHURCH OF JESUS CHRIST OF LATTER-DAY SAINTS

Springwater 9
Vineyard UT Springwater Stake
Approx. 542 South Geneva Road
Vineyard, Utah 84059

BHD #: 2346
Owner #: 502-2004
Plan Series: G300-MH-11
County Parcel: 39-228:0001
Date: 15 Aug 2024

Drawing Issue and Revision Schedule

#	Date	Description
1	15 Aug 2024	Bid Documents

STEEPLE PLATFORM, FRAMING, AND DETAILS

S401

8/15/2024 11:26:01 AM

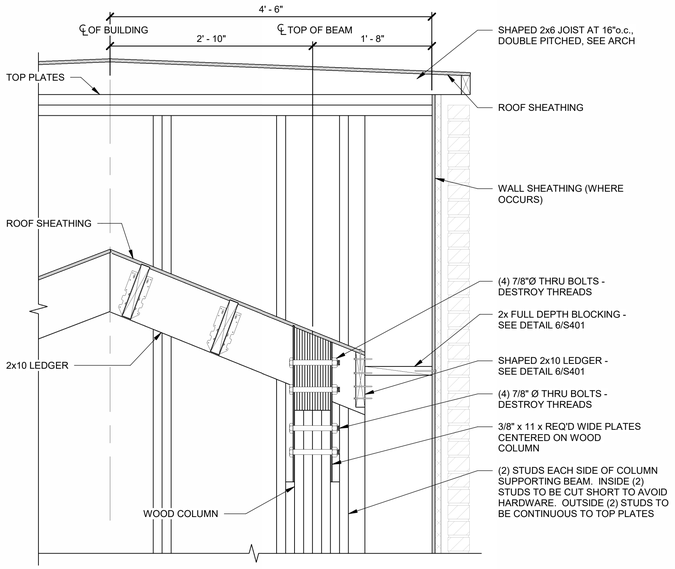

DETAIL AT STEEPLE - FRONT WALL

SCALE : NONE

1 / S402

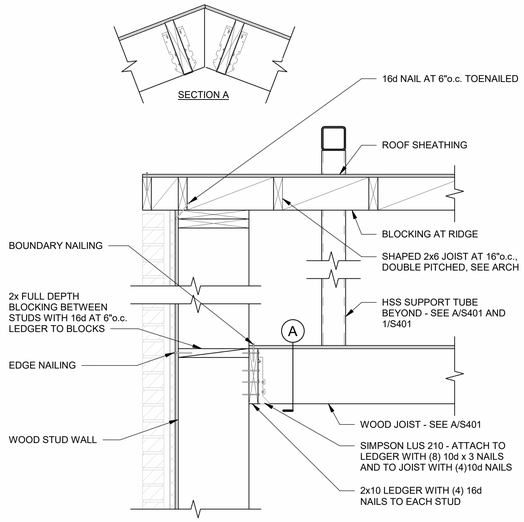

ROOF FRAMING AT STEEPLE

SCALE : NONE

2 / S402

bhd ARCHITECTS
www.bhdarchitects.com
Phone 801.571.0010
Fax 801.571.0303
Toll Free 888.571.0010
65 East Wadsworth Park Drive
Suite 205 Draper, Utah 84020

STATE OF UTAH — PROFESSIONAL ENGINEER — Matthew C. McBride No. 353893 — 8/14/24

THE CHURCH OF JESUS CHRIST OF LATTER-DAY SAINTS

Springwater 9
Vineyard UT Springwater Stake

Approx. 542 South Geneva Road
Vineyard, Utah 84059

Date: 15 Aug 2024
BHD #: 2346
County Parcel: 39-228-0001
Plan Series: G300-MH-11
Owner #: 502-2004

Drawing Issue and Revision Schedule

#	Date	Description
1	15 Aug 2024	Bid Documents

STEEPLE DETAILS

S402

8/15/2024 11:26:02 AM

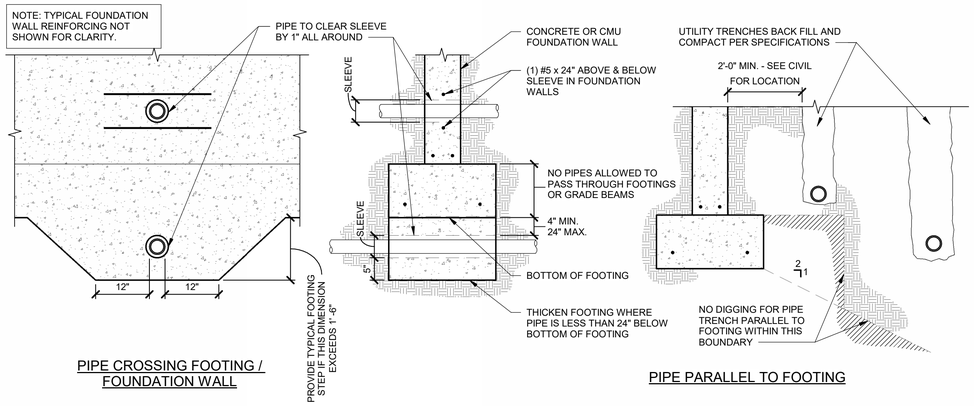

TYPICAL PIPE PERPENDICULAR AND PARALLEL TO FOOTING DETAIL

SCALE : NONE

1 S501

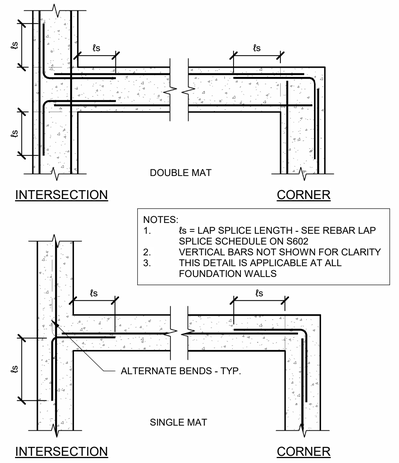

TYPICAL REINFORCING AT INTERSECTIONS IN CONCRETE WALLS

SCALE : NONE

2 S501

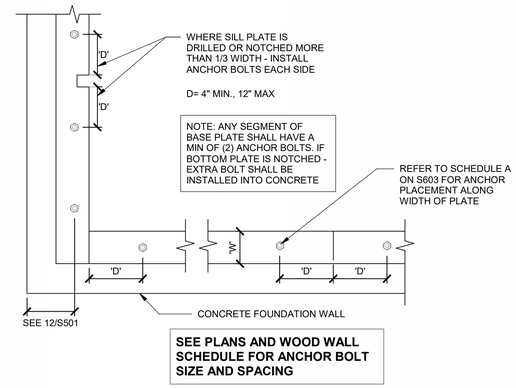

TYPICAL SILL PLATE BOLTING DETAIL

SCALE : NONE

3 S501

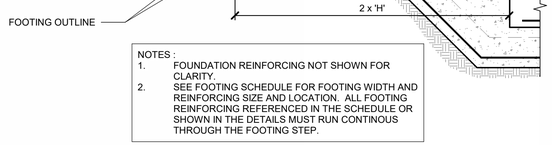

NOTES :
1. FOUNDATION REINFORCING NOT SHOWN FOR CLARITY.
2. SEE FOOTING SCHEDULE FOR FOOTING WIDTH AND REINFORCING SIZE AND LOCATION. ALL FOOTING REINFORCING REFERENCED IN THE SCHEDULE OR SHOWN IN THE DETAILS MUST RUN CONTINOUS THROUGH THE FOOTING STEP.

TYPICAL FOOTING STEP DETAIL

SCALE : NONE

4 S501



TYPICAL NON-STRUCTURAL WOOD STUD WALL AT DEPRESSED CONCRETE SLAB ON GRADE

SCALE : NONE

5 S501



INTERIOR CONCRETE FOOTING

SCALE : NONE

6 S501

NON-STRUCTURAL STUD AT SLAB ON GRADE

SCALE : NONE

7 S501

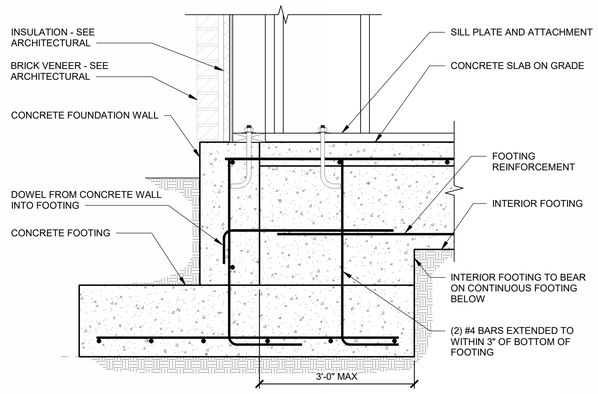

TYPICAL FOOTING STEP AT EXTERIOR FOUNDATION WALL

SCALE : NONE

8 S501

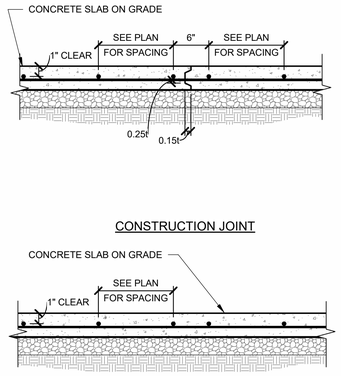

TYPICAL SLAB ON GRADE DETAILS

SCALE : NONE

9 S501

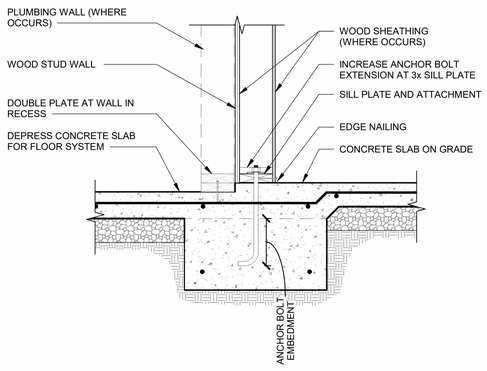

BEARING WALL DETAIL AT FLOOR OFFSET

SCALE : NONE

10 S501

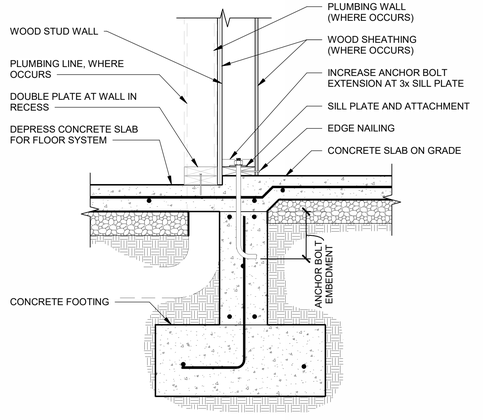

BEARING WALL DETAIL AT FLOOR OFFSET WITH FOUNDATION SYSTEM

SCALE : NONE

11 S501

bhd ARCHITECTS
www.bhdarchitects.com
Phone 801.571.0010
Fax 801.571.0303
Toll Free 888.571.0010
65 East Wadsworth Park Drive
Suite 205 Draper, Utah 84020



THE CHURCH OF JESUS CHRIST OF LATTER-DAY SAINTS

Springwater 9
Vineyard UT Springwater Stake

Approx. 542 South Geneva Road
Vineyard, Utah 84059

BHD #: 2346
County Parcel: 39-228:0001
Date: 15 Aug 2024
Plan Series: C300-MH-11
Owner #: 502-2004

Drawing Issue and Revision Schedule

#	Date	Description
1	15 Aug 2024	Bid Documents

FOUNDATION DETAILS

S501

8/15/2024 11:26:04 AM

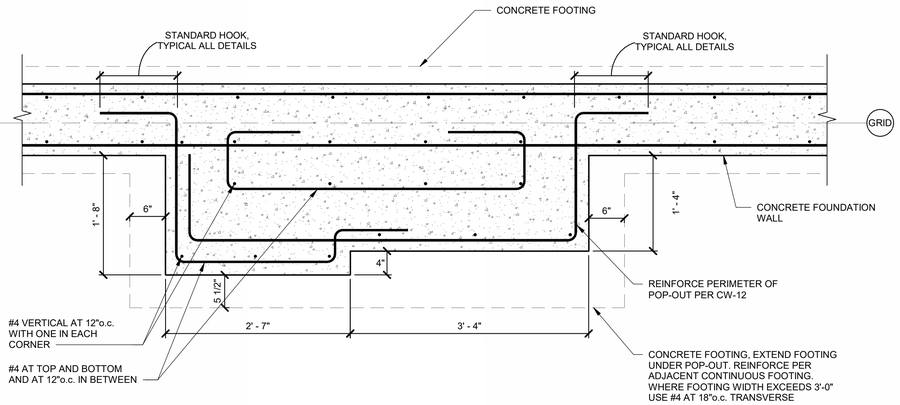

FOUNDATION POP-OUT CONFIGURATION AT SIDE DORMERS

1 / S502

SCALE : NONE

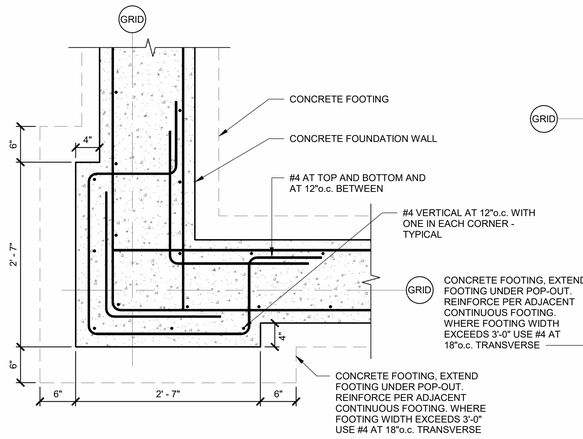

FOUNDATION POP-OUT CONFIGURATION AT FRONT OF BUILDING

2 / S502

SCALE : NONE

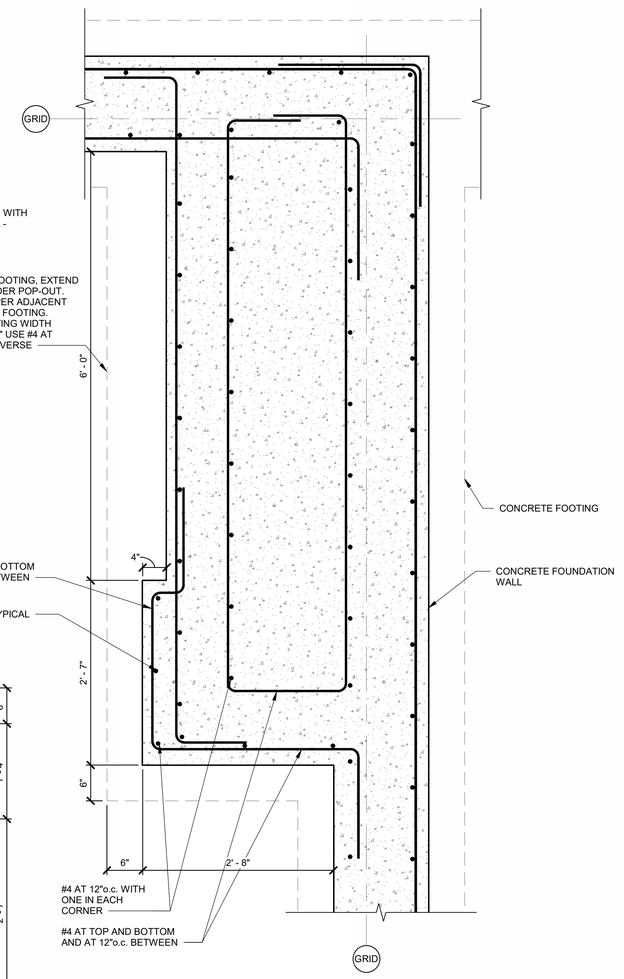

FOUNDATION POP-OUT CONFIGURATION ON SIDES FACING FRONT OF BUILDING

3 / S502

SCALE : NONE

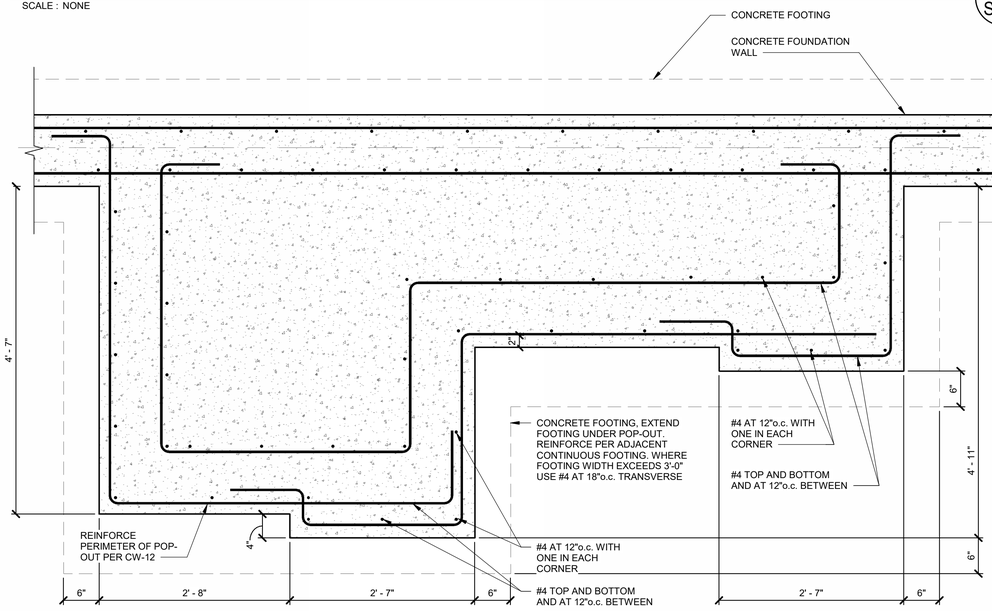

FOUNDATION POP-OUT CONFIGURATION AT ENTRIES

4 / S502

SCALE : NONE

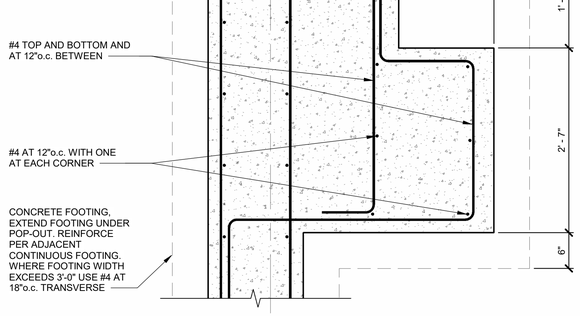

FOUNDATION POP-OUT CONFIGURATION AT BACK WALL AT DOOR

5 / S502

SCALE : NONE

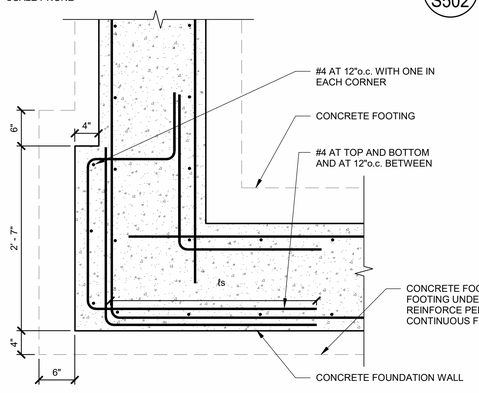

FOUNDATION POP-OUT CONFIGURATION AT FRONT OF BUILDING

6 / S502

SCALE : NONE

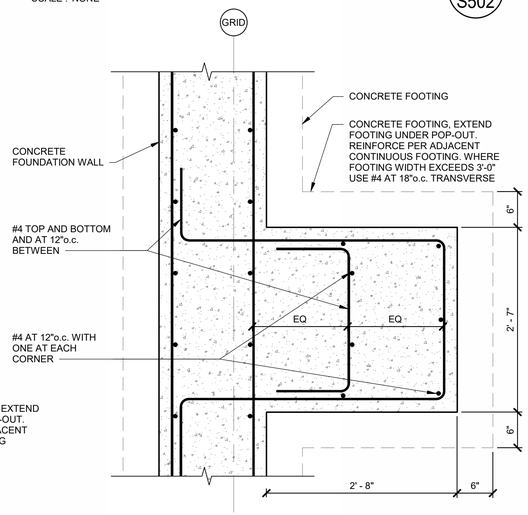

FOUNDATION POP-OUT CONFIGURATION AT BACK WALL

7 / S502

SCALE : NONE

bhd ARCHITECTS
www.bhdarchitects.com
Phone 801.571.0010
Fax 801.571.0303
Toll Free 888.571.0010
65 East Wadsworth Park Drive
Suite 205 Draper, Utah 84020

STATE OF UTAH — Matthew C. McBride No. 353893 — 8/14/24

THE CHURCH OF JESUS CHRIST OF LATTER-DAY SAINTS

Springwater 9
Vineyard UT Springwater Stake

Approx. 542 South Geneva Road
Vineyard, Utah 84059

Owner #:	502-2004
Plan Series:	G300-MH-11
County Parcel:	39-228-0001
BHD #:	2346
Date:	15 Aug 2024

Drawing Issue and Revision Schedule

#	Date	Description
1	15 Aug 2024	Bid Documents

FOUNDATION DETAILS

S502

8/15/2024 11:26:05 AM

HOLDOWN ANCHOR ATTACHMENT			
SIMPSON HOLD DOWN MODEL NO.	ATTACHMENT FASTENERS[2]	EMBEDMENT DEPTH[3]	ANCHOR BOLT[1,4,5]
HDU2	(6) SDS 1/4" x 2 1/2"	1'-6"	5/8" DIAMETER F1554, GR 36 ROD WITH DOUBLE NUT AND WASHER
HDU5	(14) SDS 1/4" x 2 1/2"	1'-6"	5/8" DIAMETER F1554, GR 36 ROD WITH DOUBLE NUT AND WASHER
HDU8	(20) SDS 1/4" x 2 1/2"	1'-6"	7/8" DIAMETER F1554, GR 36 ROD WITH DOUBLE NUT AND WASHER
HDU11	(30) SDS 1/4" x 2 1/2"	1'-6"	1" DIAMETER F1554, GR 36 ROD WITH DOUBLE NUT AND WASHER
HDU14	(36) SDS 1/4" x 2 1/2"	2'-0"	1" DIAMETER F1554, GR 36 ROD WITH DOUBLE NUT AND WASHER
HD19	(5) 1"ø BOLTS	1'-6"	SIMPSON PAB10

NOTES:

1. ALL FASTENERS FOR PRESERVATIVE AND TREATED WOOD SHALL BE HOT DIPPED ZINC COATED GALVANIZED STEEL, STAINLESS STEEL, SILICONE BRONZE OR COPPER, UNLESS WOOD IS BORATE TREATED. EXCEPTION: PLAIN CARBON STEEL FASTENERS, INCLUDING NUTS AND WASHERS IN SBXDOT AND ZINC BORATE PRESERVATIVE-TREATED WOOD INSTALLED IN AN INTERIOR, DRY ENVIRONMENT ARE PERMITTED.
2. ALL WOOD COLUMNS TO BE NAILED OR BOLTED TOGETHER PER SCHEDULE ON S603 PRIOR TO HOLDOWN INSTALLATION.
3. EMBEDMENT DEPTH, *te*, IS TO BE FROM TOP OF FOUNDATION WALL OR BOTTOM OF SLAB ON GRADE.
4. HOLDOWN ANCHORS TO BE CENTERED IN STUD WALL AND TO HAVE 4" MIN. CLEARANCE TO FACE OF CONCRETE WALL.
5. WASHER TO BE 3/8" x 4" x 4".

HOLDOWN ANCHOR BOLT SCHEDULE
SCALE : NONE — 1 / S503

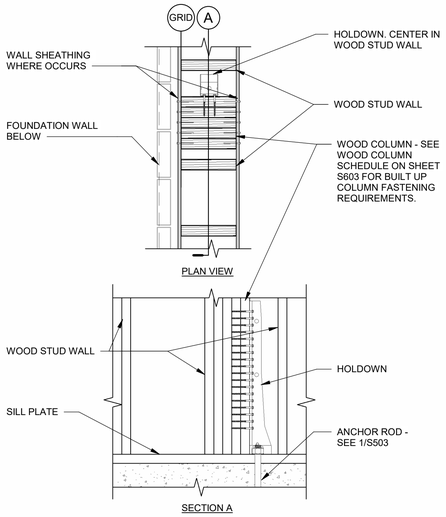

HOLDOWN AT MID-WALL
SCALE : NONE — 2 / S503

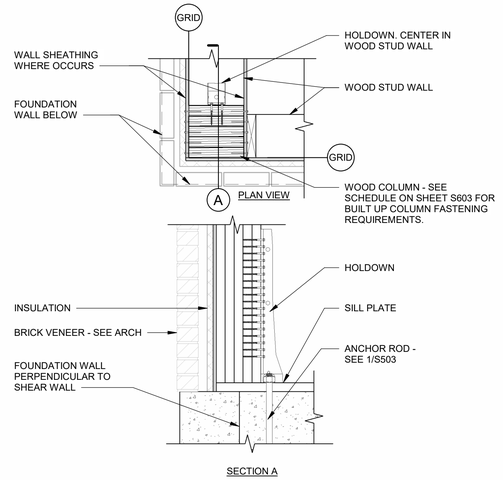

HOLDOWN AT CORNER
SCALE : NONE — 3 / S503

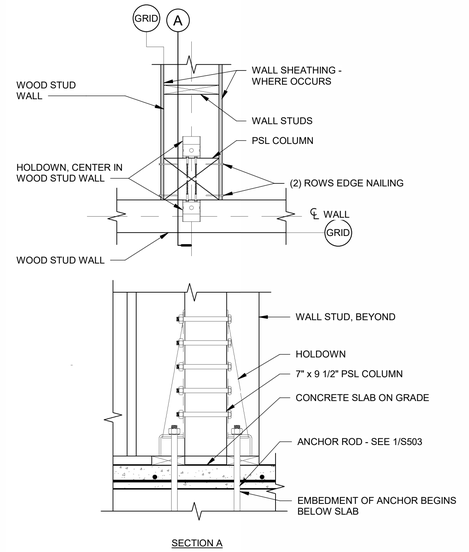

HOLDOWN AT INTERIOR SHEAR WALL
SCALE : NONE — 4 / S503

HOLDOWN AT STEEPLE ANCHORAGE
SCALE : NONE — 6 / S503

SECTION AT EXTERIOR WALL
SCALE : NONE — 7 / S503

SECTION AT FOUNDATION WALL RECESS AT OPENINGS
SCALE : NONE — 8 / S503

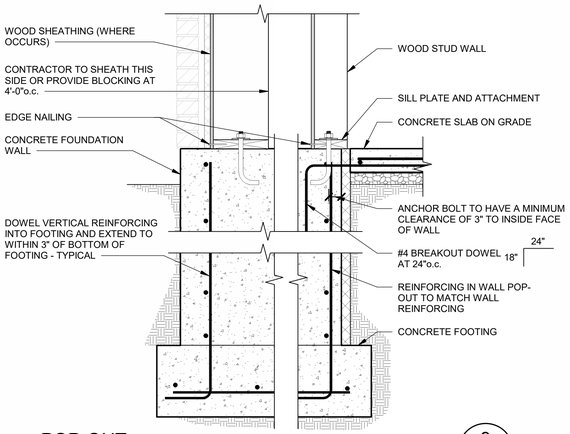

POP-OUT
SCALE : NONE — 9 / S503

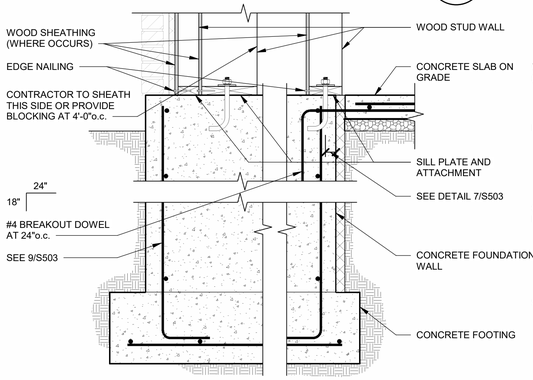

DOUBLE WALL POP-OUT
SCALE : NONE — 10 / S503

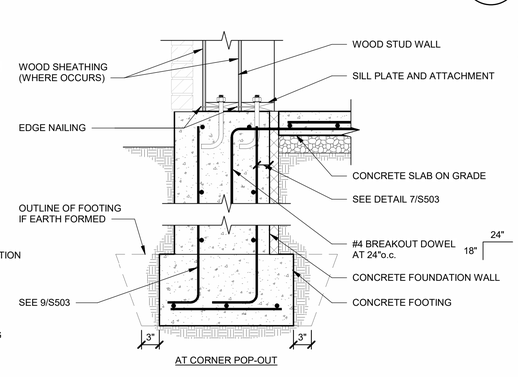

NARROW POP-OUT
SCALE : NONE — 11 / S503

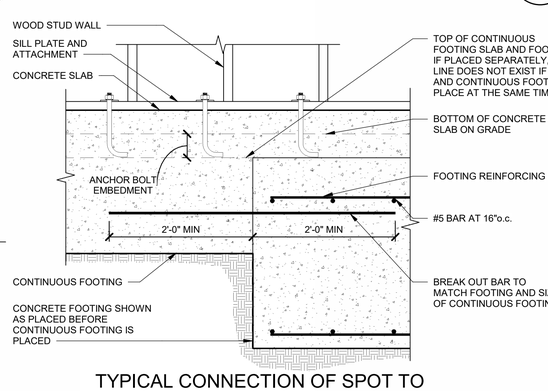

TYPICAL CONNECTION OF SPOT TO CONTINUOUS FOOTING WHEN FOOTINGS ARE PLACED AT DIFFERENT TIMES
SCALE : NONE — 12 / S503

bhd ARCHITECTS
www.bhdarchitects.com
Phone 801.571.0010
Fax 801.571.0303
Toll Free 888.571.0010
65 East Wadsworth Park Drive
Suite 205 Draper, Utah 84020

STATE OF UTAH — PROFESSIONAL ENGINEER — Matthew C. McBride No. 353893 — 8/14/24

THE CHURCH OF JESUS CHRIST OF LATTER-DAY SAINTS

Springwater 9
Vineyard UT Springwater Stake
Approx. 542 South Geneva Road
Vineyard, Utah 84059

Owner #: 502-2004
Plan Series: G300-MH-11
County Parcel: 39-228-0001
BHD #: 2346
Date: 15 Aug 2024

Drawing Issue and Revision Schedule			
#	Date	Description	
1	15 Aug 2024	Bid Documents	

FOUNDATION DETAILS

S503

8/15/2024 11:26:07 AM

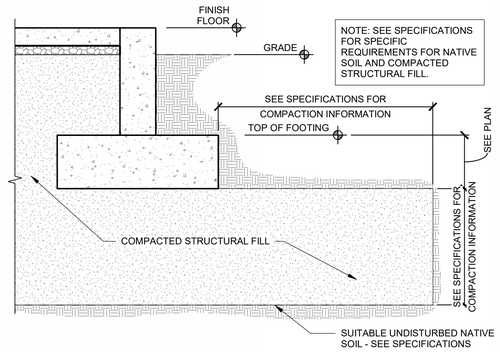

TYPICAL FOOTING OVER COMPACTED STRUCTURAL FILL

SCALE : NONE

1
S504

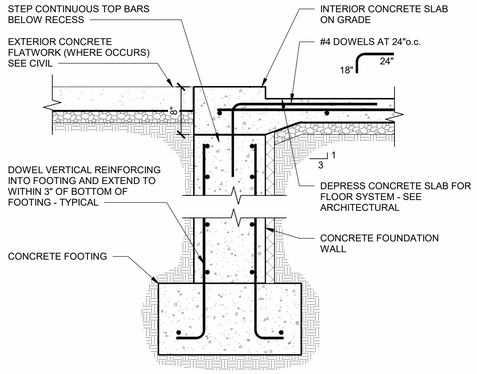

SECTION AT FOUNDATION WALL RECESS AT OPENINGS

SCALE : NONE

2
S504

bhd ARCHITECTS
www.bhdarchitects.com
Phone 801.571.0010
Fax 801.571.0303
Toll Free 888.571.0010
65 East Wadsworth Park Drive
Suite 205 Draper, Utah 84020

Matthew C. McBride
No. 353893
8/14/24
STATE OF UTAH

THE CHURCH OF JESUS CHRIST OF LATTER-DAY SAINTS

Springwater 9
Vineyard UT Springwater Stake

Approx. 542 South Geneva Road
Vineyard, Utah 84059

Date: 15 Aug 2024
BHD #: 2346
County Parcel: 39-228-0001
Plan Series: G300-MH-11
Owner #: 502-2004

Drawing Issue and Revision Schedule

#	Date	Description
1	15 Aug 2024	Bid Documents

FOUNDATION DETAILS

S504

8/15/2024 11:26:08 AM

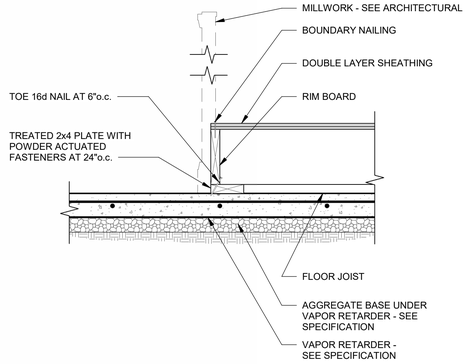

ROSTRUM FRONT EDGE — 1 / S511

SCALE : NONE

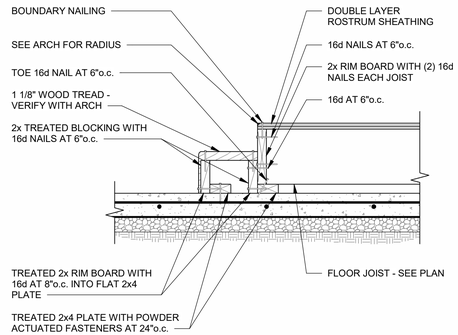

STAIRS — 2 / S511

SCALE : NONE

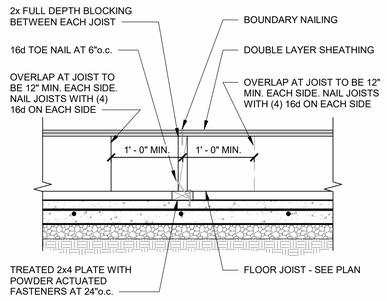

JOIST BEARING — 3 / S511

SCALE : NONE

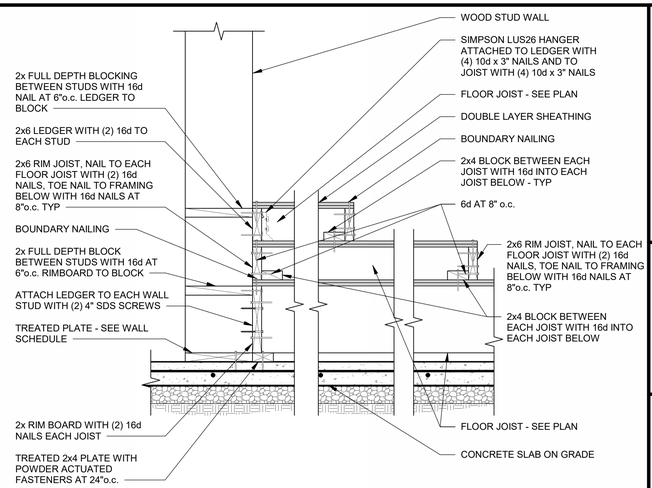

ROSTRUM OVERBUILD — 4 / S511

SCALE : NONE

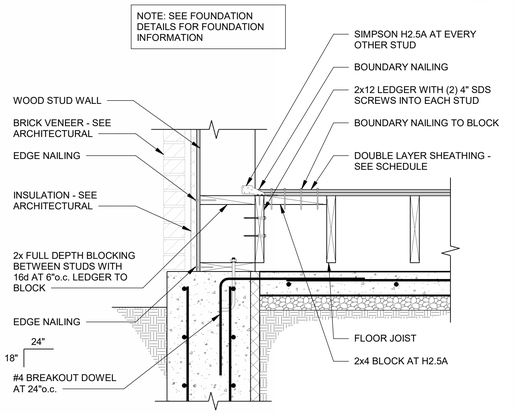

ROSTRUM DETAIL AT EXTERIOR WALL — 5 / S511

SCALE : NONE

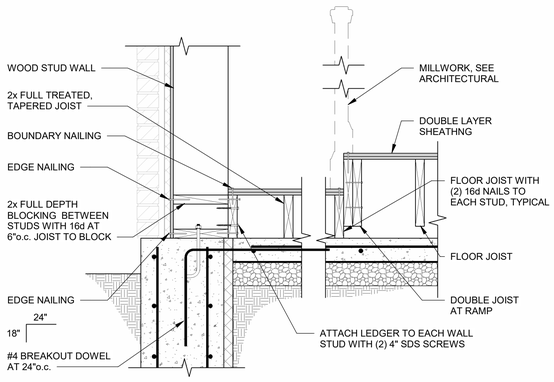

ROSTRUM RAMP AT EXTERIOR WALL — 6 / S511

SCALE : NONE

NOT USED

DETAIL (NOT USED) — 7 / S511

SCALE : NONE

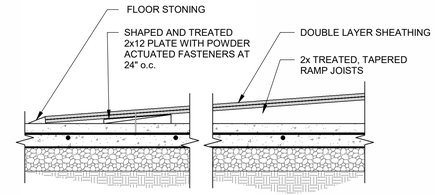

RAMP AT EDGE — 8 / S511

SCALE : NONE

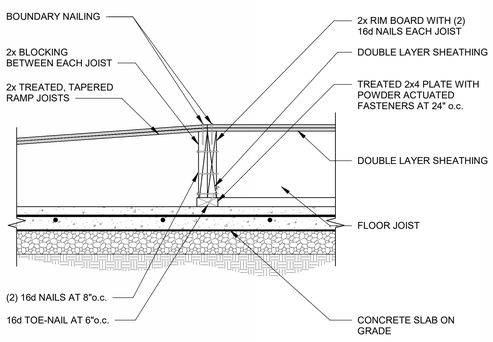

RAMP AT END — 9 / S511

SCALE : NONE

NOT USED

DETAIL (NOT USED) — 10 / S511

SCALE : NONE

NOT USED

DETAIL (NOT USED) — 11 / S511

SCALE : NONE

NOT USED

DETAIL (NOT USED) — 12 / S511

SCALE : NONE

bhd ARCHITECTS
www.bhdarchitects.com
Phone 801.571.0010
Fax 801.571.0303
Toll Free 888.571.0010
65 East Wadsworth Park Drive
Suite 205 Draper, Utah 84020

STATE OF UTAH — PROFESSIONAL ENGINEER — Matthew C. McBride No. 353893 — 8/14/24

THE CHURCH OF JESUS CHRIST OF LATTER-DAY SAINTS

Springwater 9
Vineyard UT Springwater Stake

Approx. 542 South Geneva Road
Vineyard, Utah 84059

BHD #: 2346
County Parcel: 39-228-0001
Plan Series: G300-MH-11
Owner #: 502-2004
Date: 15 Aug 2024

Drawing Issue and Revision Schedule

#	Date	Description
1	15 Aug 2024	Bid Documents

ROSTRUM AND PLATFORM DETAILS

S511

8/15/2024 11:26:10 AM

NOT USED

NOT USED

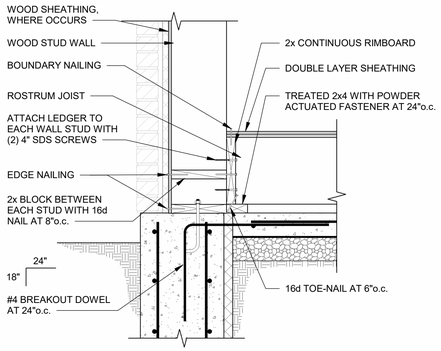

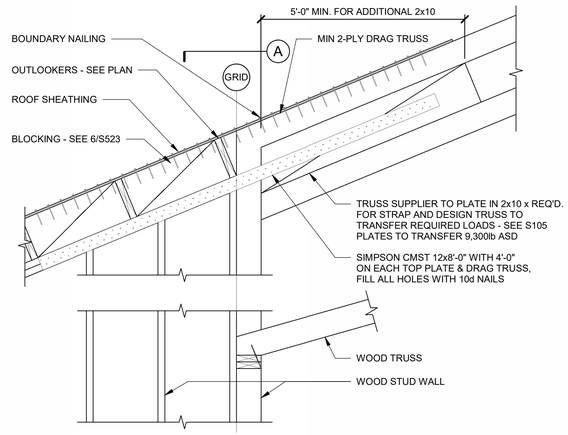

DETAIL (NOT USED) — 1/S512

SCALE : NONE

DETAIL (NOT USED) — 2/S512

SCALE : NONE

ROSTRUM AT EXTERIOR FRONT WALL — 3/S512

SCALE : NONE

DRAG DETAIL ON GRID 2 — 4/S512

SCALE : NONE

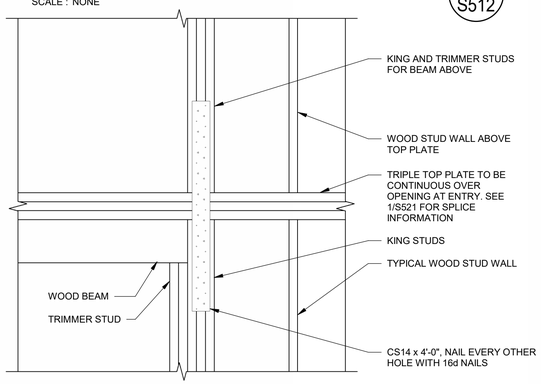

CONTINUITY OF TOP PLATES AT MAIN ENTRY — 5/S512

SCALE : NONE

bhd ARCHITECTS
www.bhdarchitects.com
Phone 801.571.0010
Fax 801.571.0303
Toll Free 888.571.0010
65 East Wadsworth Park Drive
Suite 205 Draper, Utah 84020

Matthew C. McBride No. 353893 8/14/24 STATE OF UTAH

THE CHURCH OF JESUS CHRIST OF LATTER-DAY SAINTS

Springwater 9
Vineyard UT Springwater Stake

Approx. 542 South Geneva Road
Vineyard, Utah 84059

Date: 15 Aug 2024
BHD #: 2346
County Parcel: 39-228-0001
Plan Series: G300-MH-11
Owner #: 502-2004

Drawing Issue and Revision Schedule

#	Date	Description
1	15 Aug 2024	Bid Documents

ROSTRUM AND PLATFORM DETAILS

S512

8/15/2024 11:26:11 AM

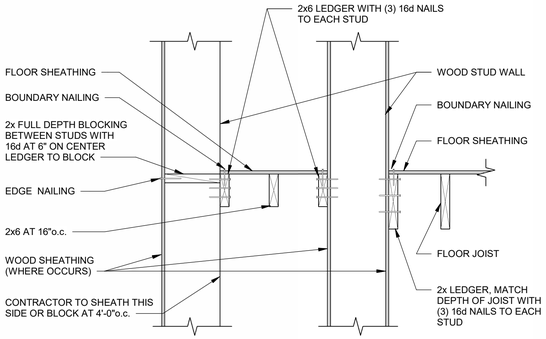

EQUIPMENT PLATFORM FRAMING AT WALL POP-OUT, FRONT OF BUILDING

SCALE : NONE

1 / S513

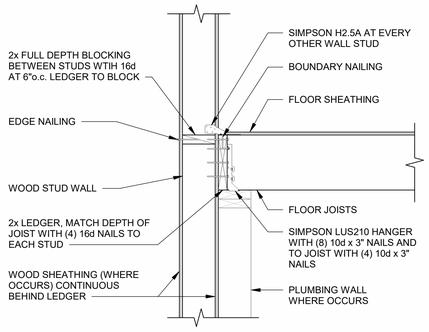

EQUIPMENT PLATFORM TO WALL CONNECTION

SCALE : NONE

2 / S513

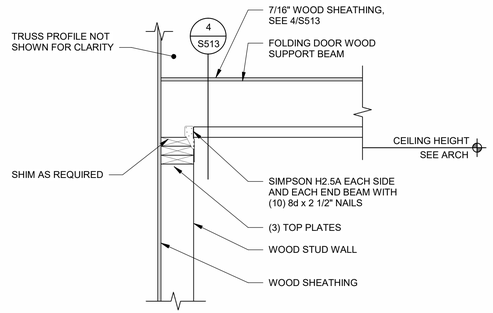

PARTITION DOOR SUPPORT AT EXTERIOR WALL

SCALE : NONE

3 / S513

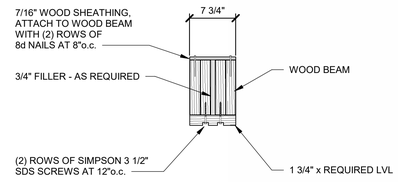

PARTITION DOOR BEAM SECTION

SCALE : NONE

4 / S513

PARTITION DOOR SUPPORT AT INTERIOR WALL

SCALE : NONE

5 / S513

EQUIPMENT PLATFORM FLOOR JOISTS BEARING AT WOOD STUD WALL

SCALE : NONE

6 / S513

STEP IN EQUIPMENT PLATFORM

SCALE : NONE

7 / S513

CHAPEL LIGHT COVE DETAIL

SCALE : NONE

8 / S513

NOT USED

DETAIL (NOT USED)

SCALE : NONE

9 / S513

NOT USED

DETAIL (NOT USED)

SCALE : NONE

10 / S513

FLOOR EDGE CONDITION AT WALL OVER BATHROOM

SCALE : NONE

11 / S513

FLOOR EDGE CONDITION AT WALL

SCALE : NONE

12 / S513

bhd ARCHITECTS
www.bhdarchitects.com
Phone 801.571.0010
Fax 801.571.0303
Toll Free 888.571.0010
65 East Wadsworth Park Drive
Suite 205 Draper, Utah 84020

LICENSED ARCHITECT — Matthew C. McBride — No. 353893 — 8/14/24 — STATE OF UTAH

THE CHURCH OF JESUS CHRIST OF LATTER-DAY SAINTS

Springwater 9
Vineyard UT Springwater Stake

Approx. 542 South Geneva Road
Vineyard, Utah 84059

Date:	15 Aug 2024
BHD #:	2346
County Parcel:	39:228:0001
Plan Series:	G300-MH-11
Owner #:	502-2004

Drawing Issue and Revision Schedule

#	Date	Description
1	15 Aug 2024	Bid Documents

EQUIPMENT PLATFORM FRAMING DETAILS

S513

8/15/2024 11:26:12 AM

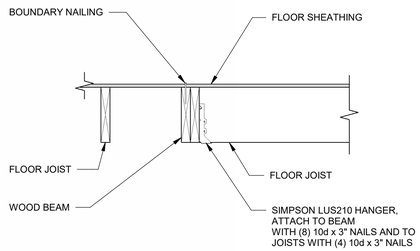

JOIST TO BEAM CONNECTION

1 S514

SCALE : NONE

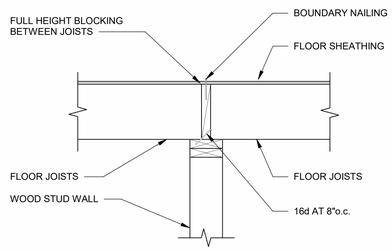

FLOOR JOISTS BEARING AT WALL

2 S514

SCALE : NONE

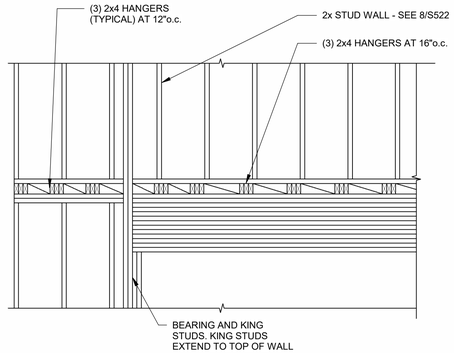

FOLDING PARTITION SECTION AT PLATFORM

3 S514

SCALE : NONE

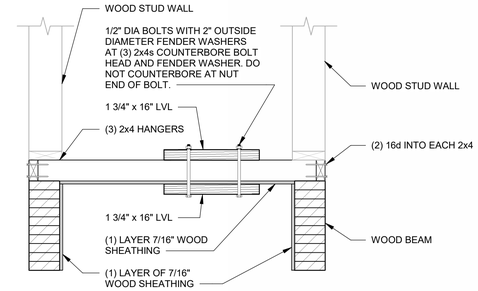

NOTE: SEE ARCH FOR DIMENSIONS AND ELEVATIONS

FOLDING PARTITION SECTION

4 S514

SCALE : NONE

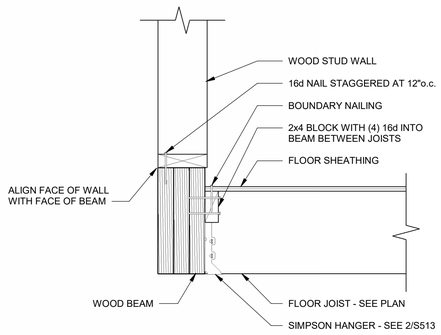

JOIST-TO-BEAM AT ENTRY

5 S514

SCALE : NONE

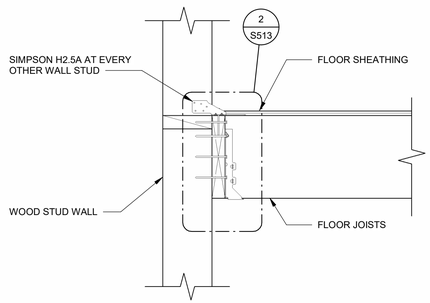

EQUIPMENT PLATFORM TO WALL CONNECTION

6 S514

SCALE : NONE

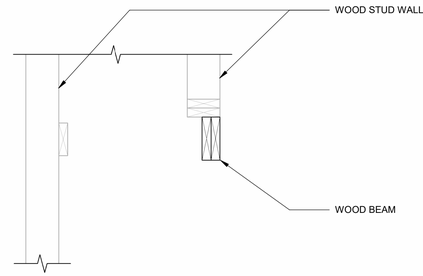

FOYER LIGHT COVE

7 S514

SCALE : NONE

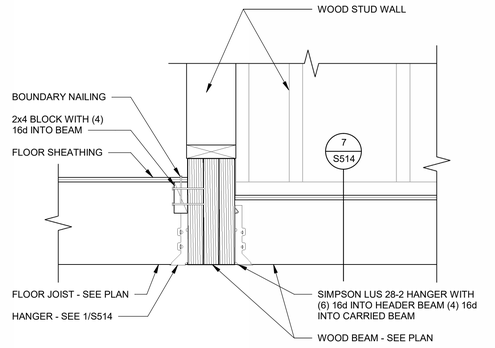

FOYER LIGHT COVE BEAM-TO-BEAM

8 S514

SCALE : NONE

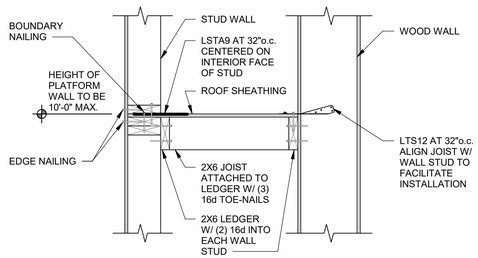

POP-OUT WALL BRACING TO BACK-UP WALL

9 S514

SCALE : NONE

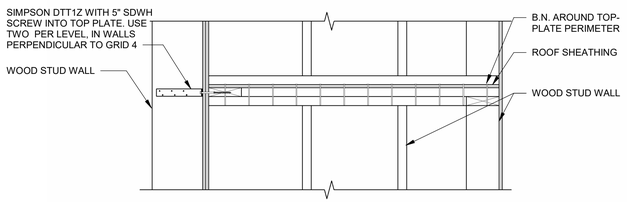

POP-OUT MIDDLE OF BUILDING AT GRID 4

10 S514

SCALE : NONE

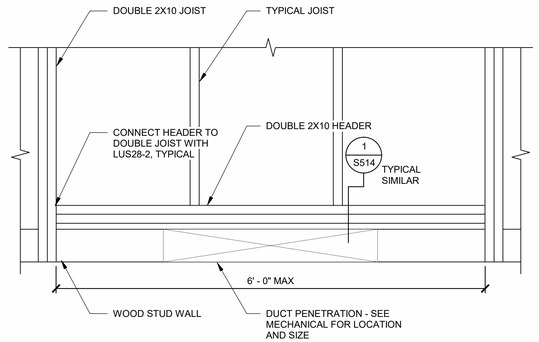

PLAN VIEW

DUCT PENETRATION AT BEARING WALL

11 S514

SCALE : NONE

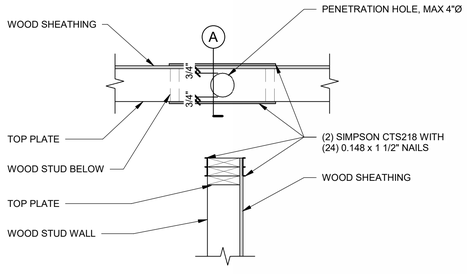

SECTION A

TOP PLATE REINFORCING AT GAS PIPE PENETRATION

12 S514

SCALE : NONE

8/15/2024 11:26:14 AM

bhd ARCHITECTS
www.bhdarchitects.com
Phone 801.571.0010
Fax 801.571.0303
Toll Free 888.571.0010
65 East Wadsworth Park Drive
Suite 205 Draper, Utah 84020

STATE OF UTAH — PROFESSIONAL ENGINEER — Matthew C. McBride No. 353893 — 8/14/24

THE CHURCH OF JESUS CHRIST OF LATTER-DAY SAINTS

Springwater 9
Vineyard UT Springwater Stake

Approx. 542 South Geneva Road
Vineyard, Utah 84059

BHD #: 2346
County Parcel: 39-228:0001
Plan Series: G300-MH-11
Owner #: 502-2004
Date: 15 Aug 2024

Drawing Issue and Revision Schedule

#	Date	Description
1	15 Aug 2024	Bid Documents

EQUIPMENT PLATFORM FRAMING DETAILS

S514

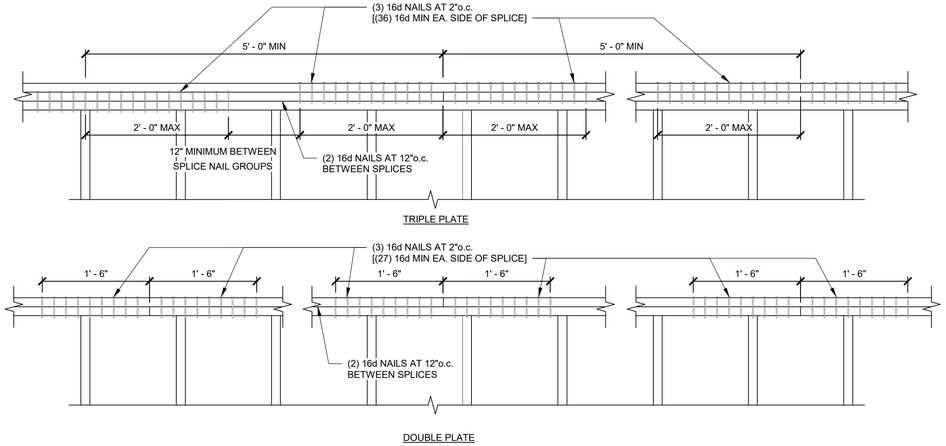

TYPICAL TOP PLATE SPLICE DETAIL

SCALE : NONE

1 S521

TOP PLATE SPLICE (2x6 WALLS ONLY) PENETRATIONS SCHEDULE	
HOLE SIZE	STRAPS
LESS THAN OR EQUAL TO 2 1/2" DIAMETER	NONE REQUIRED
GREATER THAN 2 1/2" DIAMETER AND LESS THAN OR EQUAL TO 3 1/2" DIAMETER	MSTC28 CENTERED BETWEEN (2) TOP PLATES WITH (16) 16d x 3 1/2" NAILS EACH END OF STRAP. DO NOT NAIL INTO PIPE.
NOTE: HOLE SIZE IS TOTAL ALLOWABLE HOLE DIAMETER, NOT PIPE DIAMETER. DO NOT OVERCUT.	

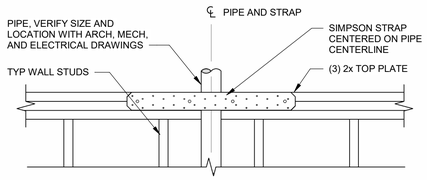

AT EXTERIOR WALL OR INTERIOR SHEAR WALL

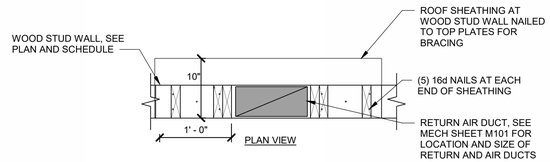

NOTE:
AT CONTRACTORS OPTION MAY USE METAL STRAP SPLICE

TYPICAL TOP PLATE SPLICE PENETRATION SCHEDULE

SCALE : NONE

2 S521

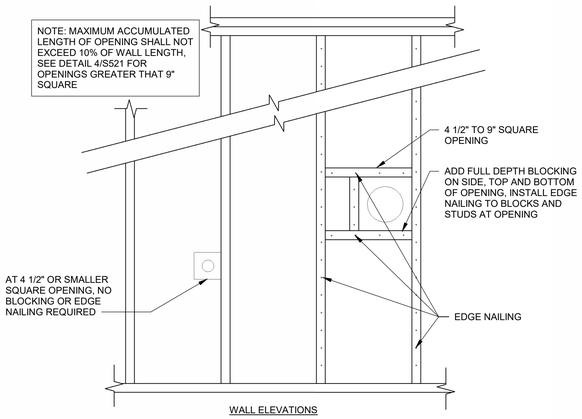

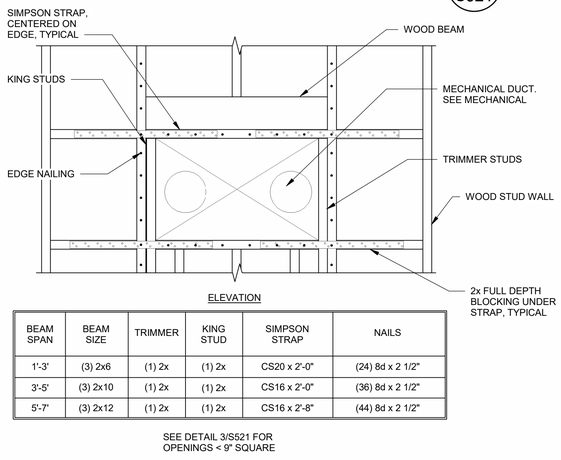

BEAM SPAN	BEAM SIZE	TRIMMER	KING STUD	SIMPSON STRAP	NAILS
1'-3"	(3) 2x6	(1) 2x	(1) 2x	CS20 x 2'-0"	(24) 8d x 2 1/2"
3'-5"	(3) 2x10	(1) 2x	(1) 2x	CS16 x 2'-0"	(36) 8d x 2 1/2"
5'-7"	(3) 2x12	(1) 2x	(1) 2x	CS16 x 2'-8"	(44) 8d x 2 1/2"

SEE DETAIL 3/S521 FOR OPENINGS < 9" SQUARE

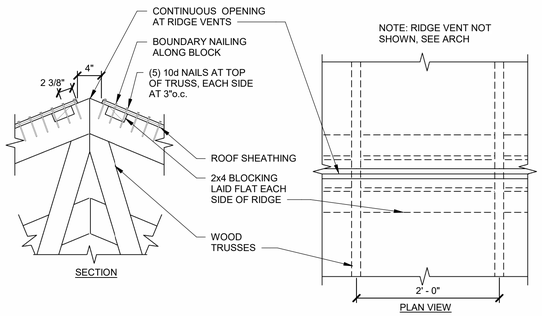

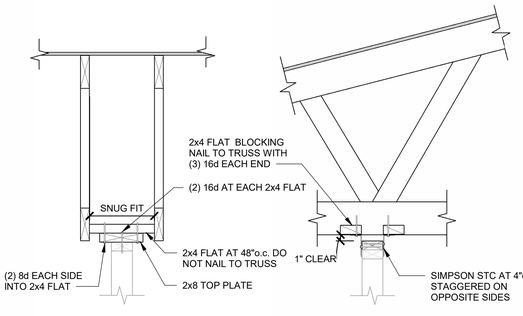

TYPICAL WALL PENETRATIONS LESS THAN 9" SQUARE

SCALE : NONE

3 S521

TYPICAL WALL PENETRATIONS SCHEDULE FOR PENETRATORS GREATER THAN 9" SQUARE

SCALE : NONE

4 S521

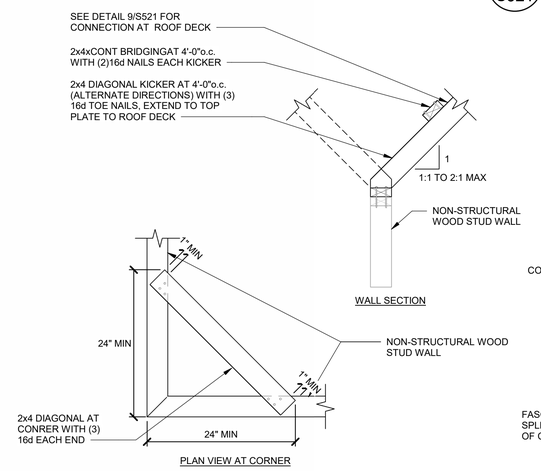

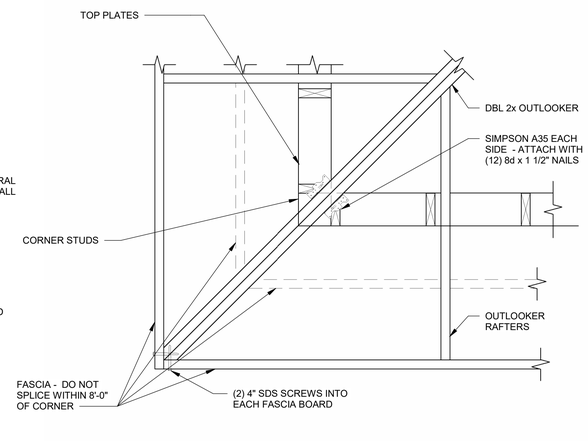

TYPICAL RIDGE DETAIL AT RIDGE VENT LOCATIONS

SCALE : NONE

5 S521

TYPICAL NON-STRUCTURAL WALL TO UNDERSIDE OF TRUSS

SCALE : NONE

6 S521

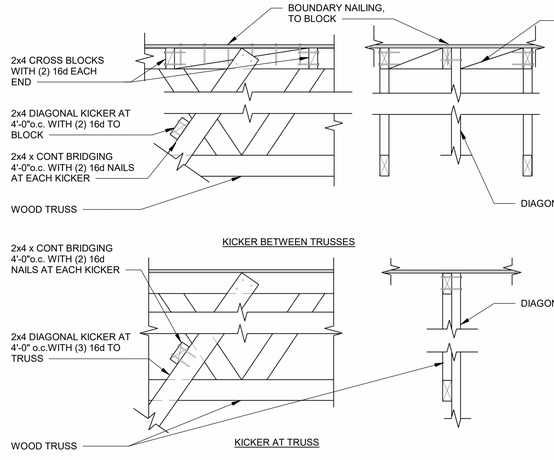

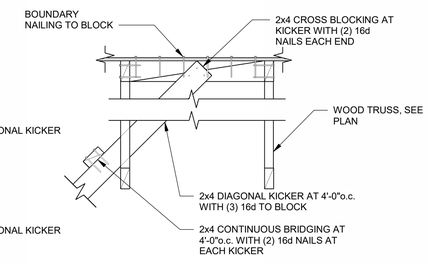

TYPICAL NON-STRUCTURAL PARTITION BRACING DETAILS

SCALE : NONE

7 S521

TYPICAL CORNER ROOF FRAMING PLAN VIEW

SCALE : NONE

8 S521

TYPICAL KICKER CONNECTIONS TO ROOF TRUSSES

SCALE : NONE

9 S521

8/15/2024 11:26:16 AM

bhd ARCHITECTS
www.bhdarchitects.com
Phone 801.571.0010
Fax 801.571.0303
Toll Free 888.571.0010
65 East Wadsworth Park Drive
Suite 205 Draper, Utah 84020

PROFESSIONAL ENGINEER — Matthew C. McBride — No. 353893 — 8/14/24 — STATE OF UTAH

THE CHURCH OF JESUS CHRIST OF LATTER-DAY SAINTS

Springwater 9
Vineyard UT Springwater Stake

Approx. 542 South Geneva Road
Vineyard, Utah 84059

Owner #: 502-2004
Plan Series: G300-MH-11
County Parcel: 39-228-0001
BHD #: 2346
Date: 15 Aug 2024

Drawing Issue and Revision Schedule

#	Date	Description
1	15 Aug 2024	Bid Documents

ROOF DETAILS

S521

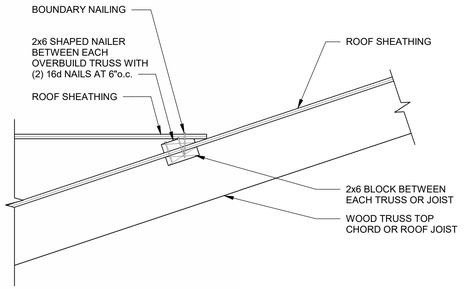

OVERBUILD BETWEEN EACH OVERBUILD TRUSS

1 / S522

SCALE : NONE

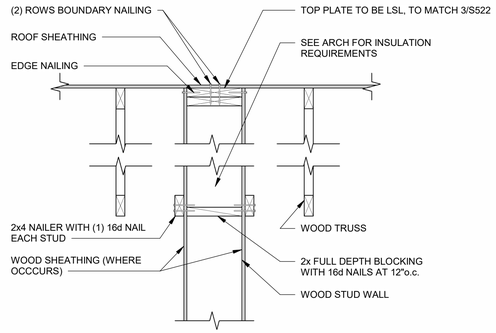

SHEAR WALL TO ROOF SHEATHING

INTERIOR SHEAR WALL TO ROOF CONNECTION

2 / S522

SCALE : NONE

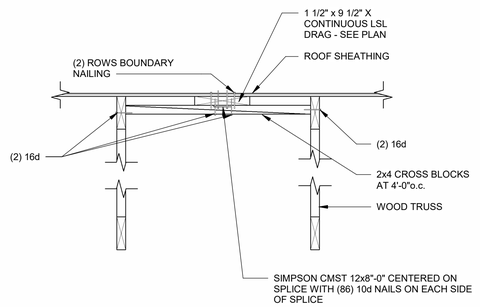

DRAG SUPPORT BETWEEN TRUSSES

3 / S522

SCALE : NONE

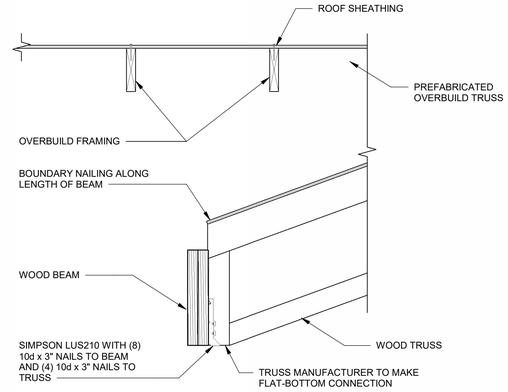

ROOF TRUSS TO BEAM CONNECTION

4 / S522

SCALE : NONE

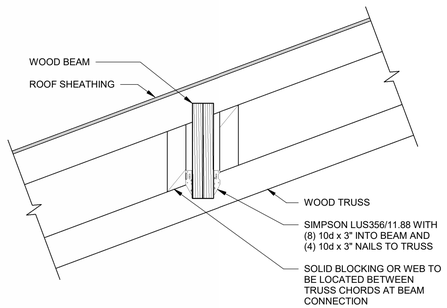

BEAM TO TRUSS AT BACK OVERBUILD

5 / S522

SCALE : NONE

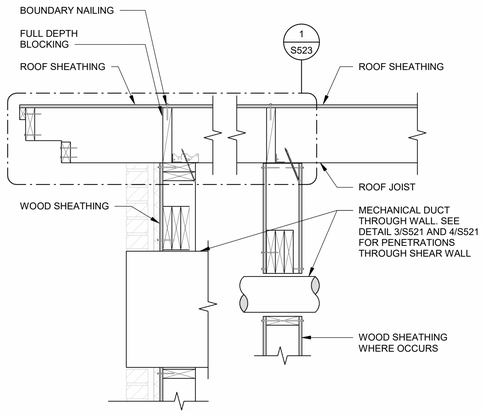

MECHANICAL PENETRATION AT WALL POP-OUT

6 / S522

SCALE : NONE

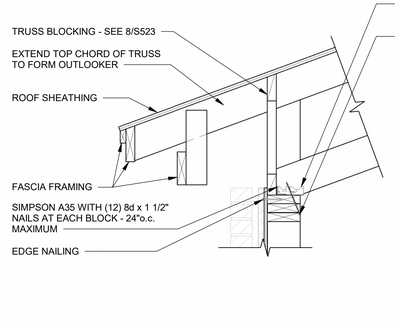

WOOD TRUSS BEARING AT EXTERIOR WALL

7 / S522

SCALE : NONE

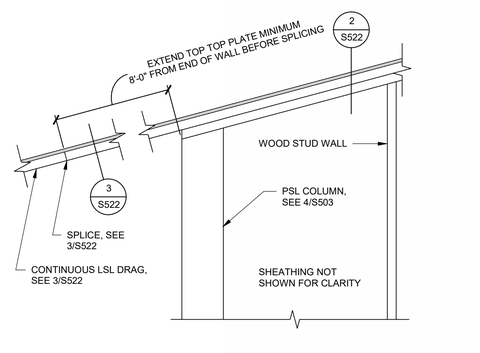

DRAG-TO-SHEAR WALL

8 / S522

SCALE : NONE

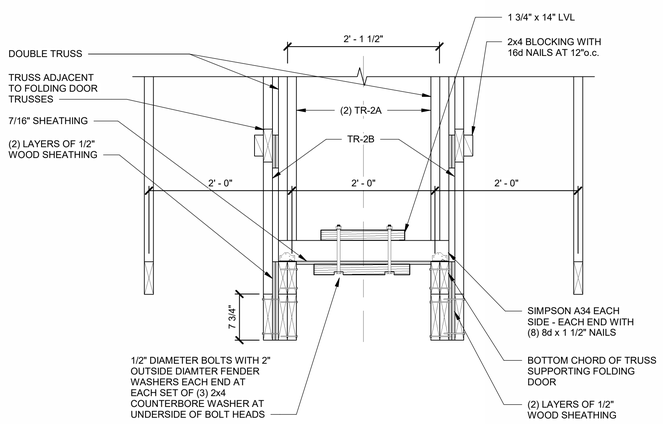

FOLDING PARTITION SECTION

9 / S522

SCALE : NONE

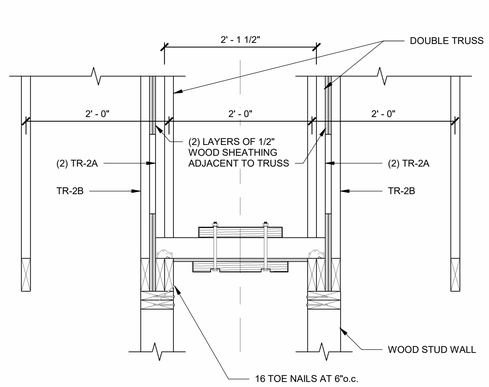

FOLDING PARTITION SECTION AT WALL

10 / S522

SCALE : NONE

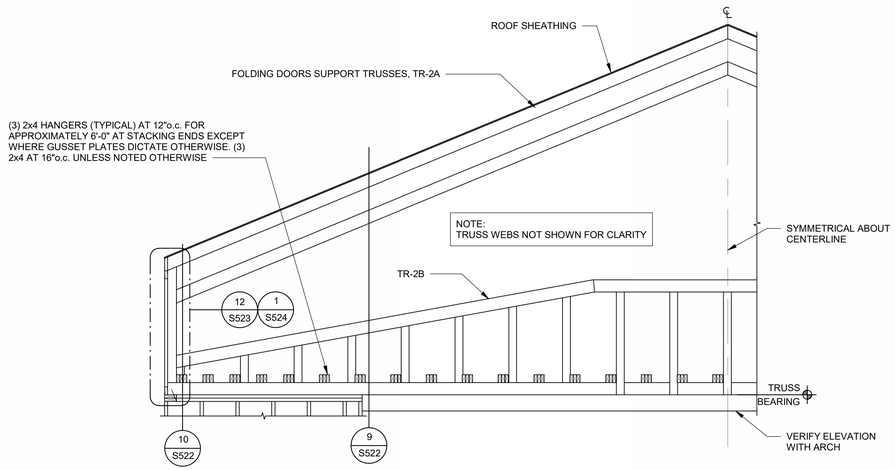

FOLDING PARTITION SECTION (BETWEEN CHAPEL AND CULTURAL HALL)

11 / S522

SCALE : NONE

bhd ARCHITECTS
www.bhdarchitects.com
Phone 801.571.0010
Fax 801.571.0303
Toll Free 888.571.0010
65 East Wadsworth Park Drive
Suite 205 Draper, Utah 84020



THE CHURCH OF JESUS CHRIST OF LATTER-DAY SAINTS

Springwater 9
Vineyard UT Springwater Stake

Approx. 542 South Geneva Road
Vineyard, Utah 84059

BHD #: 2346
County Parcel: 39-228:0001
Plan Series: C300-MH-11
Owner #: 502-2004
Date: 15 Aug 2024

Drawing Issue and Revision Schedule

#	Date	Description
1	15 Aug 2024	Bid Documents

ROOF DETAILS

S522

8/15/2024 11:26:17 AM

A35 SPACING	
GRID	SPACING
1	24"o.c.
2	12"o.c.
3	16"o.c.
OVERBUILDS	24"o.c.

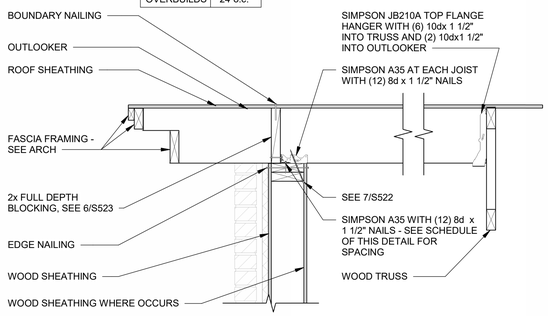

OUTLOOKER AT EXTERIOR WALL — 1/S523

SCALE : NONE

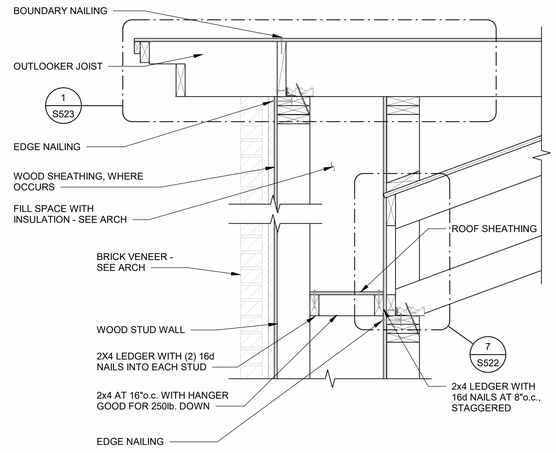

OUTLOOKER AT EXTERIOR WALL — 2/S523

SCALE : NONE

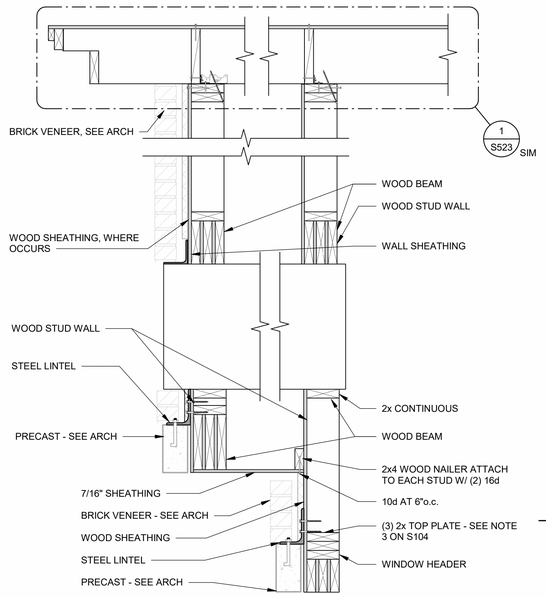

FRAMING AT ROOF POP-UP ON TRUSSES — 4/S523

SCALE : NONE

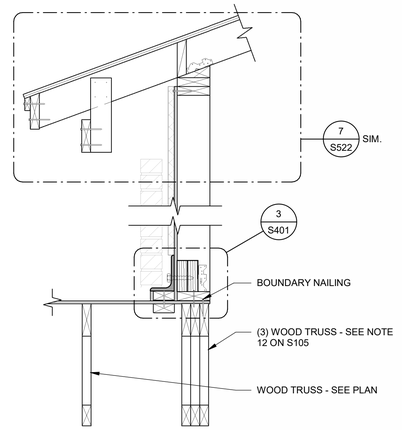

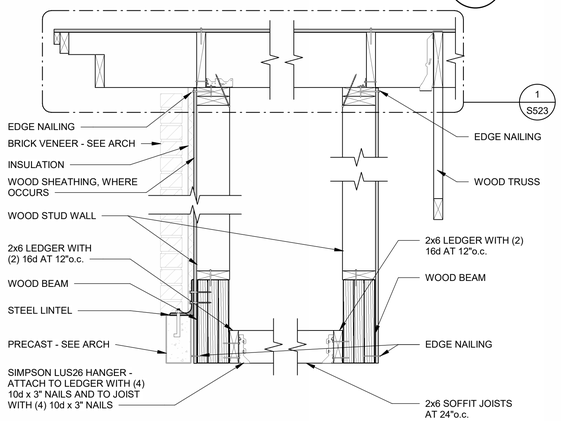

OUTLOOKER DETAIL AT ENTRY — 5/S523

SCALE : NONE

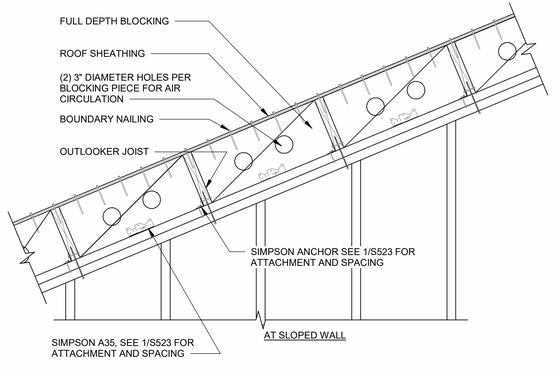

SOLID BLOCKING AND ANCHORING DETAIL — 6/S523

SCALE : NONE

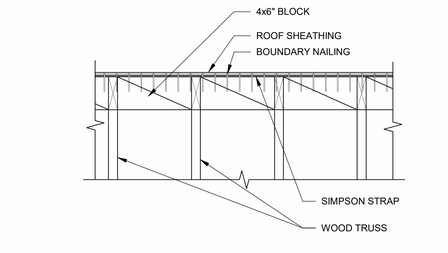

METAL COIL STRAP DETAIL — 7/S523

SCALE : NONE

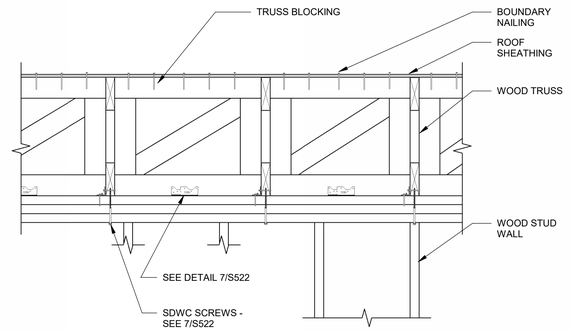

TRUSS BLOCKING AT LOW EXTERIOR WALL — 8/S523

SCALE : NONE

OUTLOOKER AND WALL POP-OUT AT BACK ENTRANCE — 9/S523

SCALE : NONE

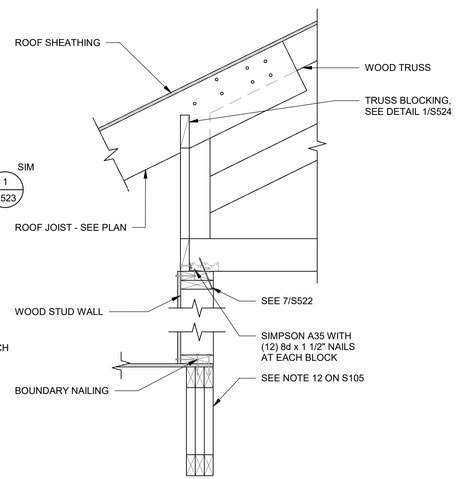

ROOF TRUSS AND OVERBUILD FRAMING — 10/S523

SCALE : NONE

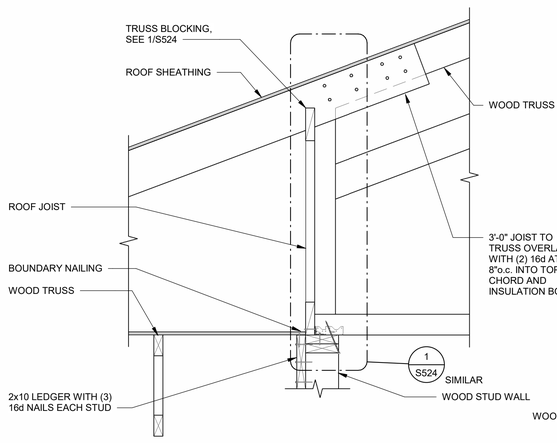

TRUSS OVERBUILD DETAIL — 11/S523

SCALE : NONE

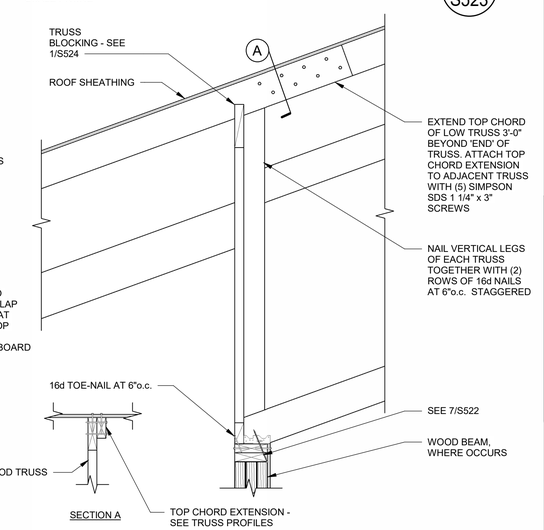

TRUSS BEARING AT INTERIOR WALL — 12/S523

SCALE : NONE

bhd ARCHITECTS
www.bhdarchitects.com
Phone 801.571.0010
Fax 801.571.0303
Toll Free 888.571.0010
65 East Wadsworth Park Drive
Suite 205 Draper, Utah 84020



THE CHURCH OF JESUS CHRIST OF LATTER-DAY SAINTS

Springwater 9
Vineyard UT Springwater Stake

Approx. 542 South Geneva Road
Vineyard, Utah 84059

Owner #: 502-2004
Plan Series: C300-MH-11
County Parcel: 39-228:0001
BHD #: 2346
Date: 15 Aug 2024

Drawing Issue and Revision Schedule

#	Date	Description
1	15 Aug 2024	Bid Documents

ROOF DETAILS

S523

8/15/2024 11:26:19 AM

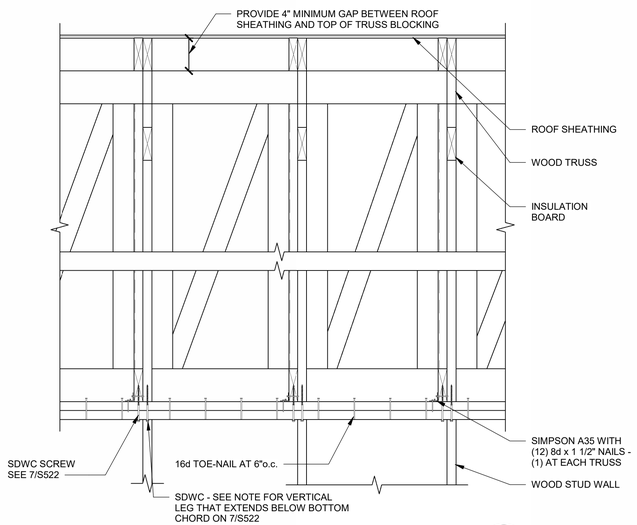

TRUSS BLOCKING AT INTERIOR BEARING

SCALE : NONE

1 / S524

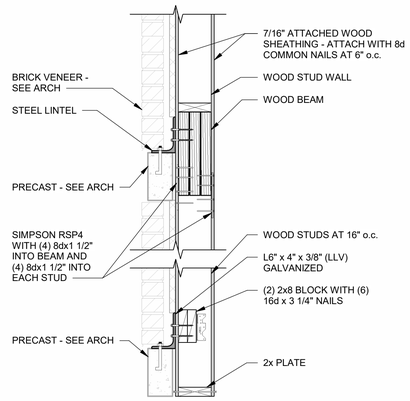

SUSPENDED ELEMENT AT OPENING

SCALE : NONE

2 / S524

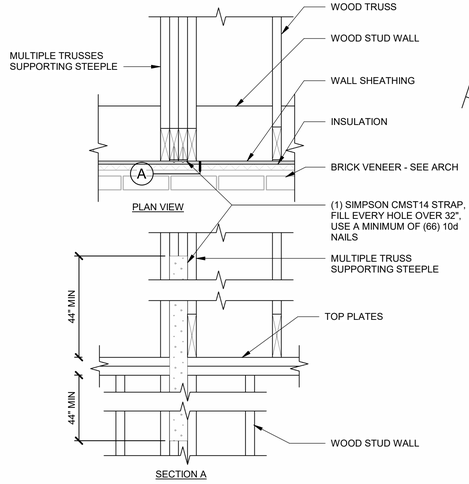

ANCHORAGE OF STEEPLE SUPPORT TRUSSES TO WALL

SCALE : NONE

3 / S524

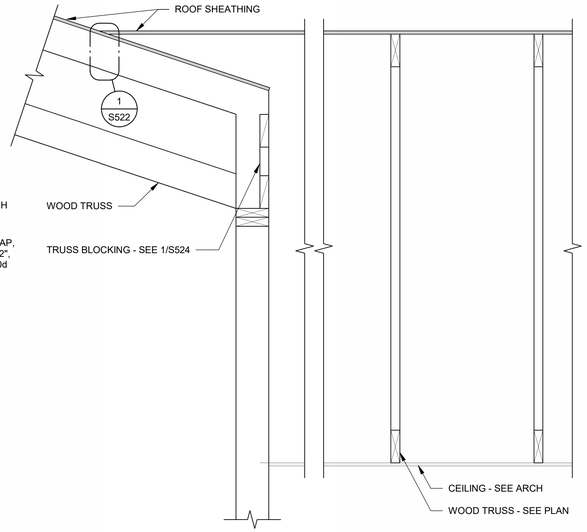

BEARING AT TR-3 AT ENTRY

SCALE : NONE

4 / S524

bhd ARCHITECTS
www.bhdarchitects.com
Phone 801.571.0010
Fax 801.571.0303
Toll Free 888.571.0010
65 East Wadsworth Park Drive
Suite 205 Draper, Utah 84020

Matthew C. McBride
No. 353893
8/14/24
STATE OF UTAH

THE CHURCH OF JESUS CHRIST OF LATTER-DAY SAINTS

Springwater 9
Vineyard UT Springwater Stake

Approx. 542 South Geneva Road
Vineyard, Utah 84059

Date: 15 Aug 2024
BHD #: 2346
County Parcel: 39-228-0001
Plan Series: G300-MH-11
Owner #: 502-2004

Drawing Issue and Revision Schedule

#	Date	Description
1	15 Aug 2024	Bid Documents

ROOF DETAILS

S524

8/15/2024 11:26:20 AM

SCHEDULE A

DESIGN CRITERIA

DESIGN CRITERIA	2018 INTERNATIONAL BUILDING CODE (ASCE 7)	2021 IBC
SEISMIC	RISK CATEGORY	III
	IBC SEISMIC IMPORTANCE FACTOR	I_E = 1.25
	MAPPED SPECTRAL RESPONSE ACCELERATION:	
	MAPPED VALUE OF S_S (FOR ALL CALCULATIONS EXCEPT C_S)	S_S = 1.311 g
	VALUE OF S_S USED TO CALCULATE C_S (LIMIT S_S TO 1.5 PER ASCE7)	S_S = 1.311 g
	S_1	S_1 = 0.0474 g
	SOIL SITE CLASS	D (DEFAULT)
	SITE COEFFICIENT, F_a	F_a = 1.2
	SITE COEFFICIENT, F_v	F_v = 1.826
	DESIGN SPECTRAL RESPONSE ACCELERATION PARAMETERS	S_{DS} = 1.049 g S_{D1} = 0.577 g
	SEISMIC DESIGN CATEGORY	D
	BASIC SEISMIC-FORCE RESISTING SYSTEM.	LIGHT FRAMED WALLS SHEATHED WITH WOOD PANELS
	RESPONSE MODIFICATION FACTOR	R = 6.5
	OVERSTRENGTH FACTOR	Ω_0 = 2.5
	ANALYSIS PROCEDURE USED.	ASCE 7 EQUIVALENT LATERAL FORCE PROCEDURE
	SEISMIC RESPONSE COEFFICIENT - ULTIMATE	C_S = 0.202 g
WIND	ASCE 7 DIRECTIONAL PROCEDURE, PART 1	
	WIND SPEED (3 SECOND GUST)	109 M.P.H.
	INTERNAL PRESSURE COEFFICIENT	±0.18
	EXPOSURE CATEGORY	C
ROOF	DEAD LOAD	20 P.S.F.
	SNOW IMPORTANCE FACTOR	I_S = 1.10
	GROUND SNOW LOAD, P_g	31 P.S.F.
	FLAT ROOF SNOW LOAD, P_f	21.5 P.S.F.
	SNOW EXPOSURE FACTOR, C_e	0.9
	THERMAL FACTOR, C_t	1.0
	SLOPE FACTOR, C_s	1.0
	ROOF SNOW LOAD - THIS LOAD REFLECTS ROOF SNOW LOAD MULTIPLIED BY THE SNOW IMPORTANCE FACTOR (VALUE SHOWN DOES NOT INCLUDE DRIFT LOAD)	21.5 P.S.F.
	BUILDING SITE ELEVATION	4,540 ft
	ROOF RAIN LOAD	1.61 in/hr
EQUIPMENT PLATFORM	DEAD LOAD	15 P.S.F.
	LIVE LOAD	40 P.S.F.
ROSTRUM	DEAD LOAD	15 P.S.F.
	LIVE LOAD	100 P.S.F.
PLATFORM	DEAD LOAD	15 P.S.F.
	LIVE LOAD	125 P.S.F.
SOIL BEARING	GSH GEOTECHNICAL REPORT NO. 0153-538-23 - DATE: AUGUST 2, 2024	2500 P.S.F.
WIND (STEEPLE)	ASCE 7 SECTION 29.4 - OTHER STRUCTURES	
	WIND SPEED	109 M.P.H.
	FORCE COEFFICIENT, Cf	1.37

SCHEDULE B

LEGEND

BOB	BOTTOM OF BEAM		INDICATES SIDE WHERE INTERIOR WOOD WALL SHEATHING IS TO BE INSTALLED
BLW ABV	INDICATES FLOOR OFFSET, SEE DETAILS		DETAIL NUMBER DETAIL SHEET
BM-x	INDICATES WOOD BEAM. SEE SCHEDULE		
CB-x	INDICATES CONCRETE BEAM TYPE, SEE SCHEDULE		INDICATES DEPRESSED SLAB, SEE ARCHITECTURAL PLANS.
CJ	INDICATES CONTROL JOINT	S — S	INDICATES FOOTING STEP
CW-x	INDICATES CONCRETE WALL, SEE SCHEDULE		INDICATES NON-STRUCTURAL WOOD STUD WALL
EOS	EDGE OF SLAB		INDICATES WOOD BEAM OR HEADER
EF	EACH FACE		INDICATES WOOD ROOF OR FLOOR SHEATHING, SEE PLAN AND SCHEDULE
FC-x	INDICATES CONCRETE CONTINUOUS FOOTING TYPE, SEE SCHEDULE		
FR-x	INDICATES CONCRETE RECTANGULAR FOOTING TYPE, SEE SCHEDULE		INDICATES STRUCTURAL WOOD SHEAR WALL
FS-x	INDICATES CONCRETE SPOT FOOTING TYPE, SEE SCHEDULE		TYPE 1 BLOCKED DIAPHRAGM - SEE SCHEDULE ON S604
LSL LVL	LAMINATED STRAND LUMBER LAMINATED VENEER LUMBER	HD / POST/ANCHOR	HD - SIMPSON HOLDOWN SIZE POST - SIZE OF END POST CONNECTED TO HOLDOWN ANCHOR - ANCHOR SIZE
SCL	INDICATES STRUCTURAL COMPOSITE LUMBER SUCH AS LVL AND LSL		
SC-x	INDICATES STEEL COLUMN TYPE		
TOF	TOP OF FOOTING		
TOS	TOP OF SLAB		
TOW	TOP OF WALL		
TR-X	INDICATES WOOD TRUSS, SEE ELEVATIONS ON S20X		
WC-x	INDICATES WOOD COLUMN. SEE SCHEDULE		
WIJ-x	INDICATES WOOD I-JOIST. SEE SCHEDULE		
Wx-x	INDICATES WOOD WALL. SEE SCHEDULE		

SCHEDULE H

SCHEDULE OF CONSTRUCTION MATERIALS

CONCRETE	LOCATION	28 - DAY COMPRESSIVE STRENGTH
	EXTERIOR CONCRETE	4,500 P.S.I. MIX TYPE E
	FOOTINGS	3,000 P.S.I. MIX TYPE A
	FOUNDATION WALLS (EXPOSED TO FREEZING AND DE-ICERS)	4,500 P.S.I. MIX TYPE E
	FOUNDATION WALLS (NOT EXPOSED TO FREEZING AND DE-ICERS)	4,000 P.S.I. MIX TYPE D
	INTERIOR SLABS ON GRADE	3,500 P.S.I. MIX TYPE B
	NOTES: 1. CONCRETE STRENGTH USED IN DESIGN IS 2500 P.S.I.	2. SEE SPECIFICATIONS 03-3111 FOR DEFINITION OF MIX TYPE.
REINFORCING STEEL	FIELD BENT BARS	ALL OTHER BARS
	ASTM A615, GRADE 40 OR GRADE 60 (SEE LAP SPLICE SCHEDULE D/S602 FOR LAP LENGTHS)	ASTM A615, GRADE 60 (SEE LAP SPLICE SCHEDULE D/S602 FOR LAP LENGTHS)

WOOD[1,2,3,4]

DIMENSION LUMBER

APPLICATION	SPECIES GROUP AND MINIMUM GRADE (ANY SPECIES AND GRADE LISTED MAY BE USED FOR ANY OF THE DESCRIBED APPLICATIONS).		
TOP PLATES, STRUTS, ROOF JOISTS, FLOOR JOISTS, MISC. FRAMING, HEADERS, BEAMS, LEDGERS	DOUGLAS FIR-LARCH HEM FIR SOUTHERN PINE MSR	#2 OR BETTER #1 OR BETTER #2 OR BETTER 1650F - 1.5E OR BETTER	
BLOCKING	DOUGLAS FIR-LARCH HEM FIR SOUTHERN PINE MSR	#2 OR BETTER #2 OR BETTER #2 OR BETTER 1650F - 1.5E OR BETTER	
POSTS AND TIMBERS 5" x 5" AND LARGER	DOUGLAS FIR-LARCH SOUTHERN PINE	#1 OR BETTER #1 OR BETTER	
SILL PLATES	DOUGLAS FIR-LARCH HEM FIR SOUTHERN PINE SCL	2x4, 1 1/2"x3 1/2" SCL STANDARD OR BETTER STANDARD OR BETTER STANDARD OR BETTER 1.3E	2x6, 2x8, 2x10, 1 1/2"x9 1/2" SCL, 1 1/2"x11 7/8" SCL #2 OR BETTER #2 OR BETTER #2 OR BETTER 1.5E
TRUSSED RAFTERS (CHORDS AND WEBS)	SPRUCE PINE FIR DOUGLAS FIR-LARCH HEM FIR SOUTHERN PINE MSR	#2 OR BETTER #2 OR BETTER #1 OR BETTER #2 OR BETTER 165F - 1.5E OR BETTER	
EXTERIOR WALL STUDS AND INTERIOR STRUCTURAL WALL STUDS	DOUGLAS FIR-LARCH HEM FIR SOUTHERN PINE SCL	2x4 #2 OR BETTER #1 OR BETTER #2 OR BETTER	2x6 #2 OR BETTER #1 OR BETTER #2 OR BETTER
INTERIOR NON-STRUCTURAL WALL STUDS	DOUGLAS FIR-LARCH HEM FIR SOUTHERN PINE	2x4 STANDARD, UTILITY, CONSTRUCTION, OR BETTER STANDARD, UTILITY, CONSTRUCTION, OR BETTER STANDARD, UTILITY, CONSTRUCTION, OR BETTER	2x6 #2 OR BETTER #2 OR BETTER #2 OR BETTER

STRUCTURAL COMPOSITE LUMBER (SCL) SUCH AS LVL AND LSL

	MINIMUM PROPERTY VALUES[1] - P.S.I.				
	Fb	Fv	Fc⊥	Fc||	E x 10^6
1-1/2" x = 5-1/2" (SEE NOTE 4 AND 5)	1,700	220	575	1,400	1.3
1-1/2" x ALL OTHER DEPTHS (SEE NOTE 4 AND 5)	2,250	220	575	1,950	1.5
1-3/4" x ALL DEPTHS	2,600	285	750	2,350	1.9
3-1/2" x ALL DEPTHS	1,700	285	680	1,400	1.3

GLU-LAM COLUMNS

	MINIMUM PROPERTY VALUES[1] - P.S.I.				
	Fb	Fv	Fc⊥	Fc||	E x 10^6
5 1/8" x ALL DEPTHS	2,400	265	650	1,800	2.0

GLUED LAMINATED BEAMS

	MINIMUM PROPERTY VALUES[1] - P.S.I.				
	Fb TENSION ZONE	Fb COMPRESSION ZONE STRESSED IN TENSION	Fv	Fc	E x 10^6
24F-V4 DF/DF OR 24F-E4 SP/SP WITH STRESS CLASS 24F-1.8E EXCEPT AT BM, USE 24F-V8	2400	2400	265	1600	1.8

NOTES:
1. DESIGN VALUES ARE FOR NORMAL DURATION. REPETITIVE FRAMING FACTORS AND SIZE FACTORS HAVE NOT BEEN APPLIED.
2. 1 3/4" MEMBERS MAY BE USED TO REPLACE 1 1/2" SCL MEMBERS. ADJUST DIMENSIONS IN PLANS AND DETAILS ACCORDINGLY.
3. LIMIT THE MODULUS OF ELASTICITY OF 1 1/2" LSL MEMBERS TO 1.55x10^6 psi.
4. LSL WOOD IS HARDER AND DENSER THAN LVL WOOD. FRAMER MUST HAVE EQUIPMENT THAT WILL DRIVE NAILS COMPLETELY INTO WOOD.

bhd ARCHITECTS
www.bhdarchitects.com
Phone 801.571.0010
Fax 801.571.0303
Toll Free 888.571.0010
65 East Wadsworth Park Drive
Suite 205 Draper, Utah 84020

Matthew C. McBride No. 353893 8/14/24 STATE OF UTAH

THE CHURCH OF JESUS CHRIST OF LATTER-DAY SAINTS

Springwater 9
Vineyard UT Springwater Stake
Approx. 542 South Geneva Road
Vineyard, Utah 84059

Owner #: 502-2004
Plan Series: G300-MH-11
County Parcel: 39-228-0001
BHD #: 2346
Date: 15 Aug 2024

Drawing Issue and Revision Schedule

#	Date	Description
1	15 Aug 2024	Bid Documents

SCHEDULES

S601

8/15/2024 11:26:22 AM

SCHEDULE A

CONCRETE FOOTING SCHEDULE

MARK*	WIDTH	LENGTH	DEPTH	REINFORCING CROSSWISE				REINFORCING LENGTHWISE				REMARKS
				NO.	SIZE	LENGTH	SPACING	NO.	SIZE	LENGTH	SPACING	
FC1.5	1'-6"	CONT.	1'-0"	-	-	-	-	2	#4	CONT.	12"o.c.	
FC2.0	2'-0"	CONT.	1'-0"	-	-	-	-	3	#4	CONT.	EQUAL	
FC4.0	4'-0"	CONT.	1'-0"	-	-	-	-	5	#4	CONT.	EQUAL	
FS2.5	2'-6"	2'-6"	1'-0"	3	#5	2'-0"	EQUAL	3	#5	2'-0"	EQUAL	
FS4.0	4'-0"	4'-0"	1'-0"	5	#5	3'-6"	EQUAL	5	#5	3'-6"	EQUAL	
FS6.5	6'-6"	6'-6"	2'-0"	7	#5	6'-0"	EQUAL	7	#5	6'-0"	EQUAL	REINFORCE TOP AND BOTTOM
FS8X4	8'-0"	4'-0"	1'-6"	9	#6	3'-6"	EQUAL	5	#6	7'-6"	EQUAL	REINFORCE TOP AND BOTTOM

NOTES:

1. PLACE REINFORCING IN THE BOTTOM OF THE FOOTING WITH 3" CLEAR CONCRETE COVER (UNLESS NOTED OTHERWISE). USE ADOBE BLOCKS.
2. TOP REINFORCING, WHERE SPECIFIED, SHALL BE PLACED IN THE TOP OF THE FOOTING WITH 2" MINIMUM CONCRETE COVER.
3. IF FOOTINGS ARE EARTH-FORMED, FOOTING WIDTH AND LENGTH SHALL BE 6" LONGER AND WIDER THAN SCHEDULED. SEE FIGURE BELOW.
4. RUN CONTINUOUS BARS IN CONTINUOUS FOOTINGS THRU INTERSECTED SPOT FOOTINGS. SEE FIGURE BELOW.

*FOOTING TYPES

FC = CONTINUOUS FOOTING
FS = SPOT FOOTING

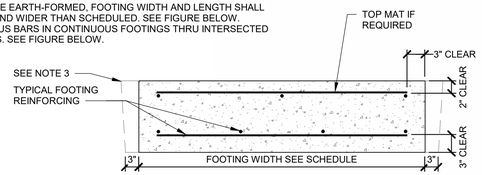

TYPICAL FOOTING SECTION

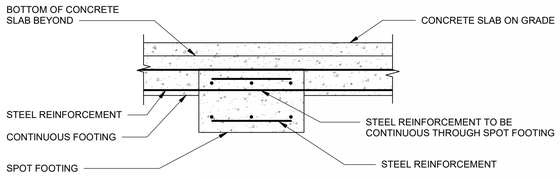

CONTINUOUS BARS THROUGH INTERSECTED SPOT FOOTINGS

SCHEDULE B

CONCRETE FOUNDATION WALL SCHEDULE

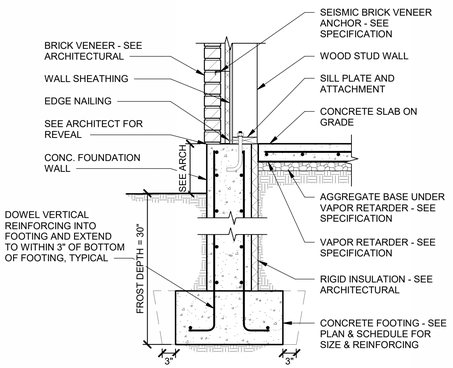

NOTES:

1. IF FOOTINGS ARE EARTH-FORMED, FOOTING WIDTH AND LENGTH SHALL BE 6" LONGER AND WIDER THAN SCHEDULED. SEE FIGURE ABOVE.

MARK	WIDTH	HORIZONTAL REINF.			VERTICAL REINF.	
		TOP	INTERMEDIATE	BOTTOM	SIZE	SPACING
CW-8	8"	(2) #4	#4 AT 16"o.c.	(2) #4	#4	16"o.c.
CW-12	12"	(2) #4	(2) #4 AT 18"o.c.	(2) #4	#4	16"o.c. EF
CW-14	14"	(2) #4	(2) #4 AT 16"o.c.	(2) #4	#4	16"o.c. EF
CW-18	18"	(2) #4	(2) #4 AT 12"o.c.	(2) #4	#4	12"o.c. EF

SCHEDULE C

SPECIAL INSPECTION SCHEDULE [1, 2]

ESTABLISHED PER 2018 IBC SECTION 110 AND CHAPTER 17

ITEM	CONTINUOUS[3]	PERIODIC[3]	REFERENCE	COMMENTS
CONCRETE CONSTRUCTION (IBC 1705.3)			SEE IBC TABLE 1705.3 - REF. NOTE C1	C1. SPECIAL INSPECTION IS NOT REQUIRED FOR CONCRETE ISOLATED SPREAD FOOTINGS, CONTINUOUS FOOTINGS, NON-STRUCTURAL SLABS, FOUNDATION WALLS, PATIOS, DRIVEWAYS, AND SIDEWALKS BECAUSE THE REQUIREMENTS OF IBC 1705.3 ARE MET.
REINFORCING STEEL PLACEMENT		●		
EMBEDDED BOLTS & PLATES	●			C2. PERFORM AIR, SLUMP AND TEMPERATURE TESTS WHEN CONCRETE SAMPLES ARE CAST.
VERIFYING REQUIRED DESIGN MIX		●		C3. EPOXY AND EXPANSION ANCHORS INTO CONCRETE MAY BE USED ONLY WHEN APPROVED BY ARCHITECT. AND/OR ENGINEER USING AN APPROVED PRODUCT WITH CURRENT PUBLISHED ICC RESEARCH REPORT NUMBERS. COORDINATE CONTINUOUS/PERIODIC SPECIAL INSPECTION REQUIREMENTS WITH ICC REPORT.
CONCRETE PLACEMENT / SAMPLING	●		REFERENCE NOTE C2	
CURING TEMPERATURE / TECHNIQUES		●		C4. REFER TO DIVISION 03 OF THE SPECIFICATION FOR ADDITIONAL AND SPECIFIC TESTING AND INSPECTION REQUIREMENTS.
EPOXY / EXPANSION ANCHOR PLACEMENT	●	●	REFERENCE NOTE C3	
MASONRY CONSTRUCTION (IBC 1705.4)			SEE TMS 402/ACI 550 TABLE 1.19.2 (NON-ESSENTIAL)	M1. INSPECTION NOT REQUIRED FOR MECHANICAL SCREEN WALLS. M2. REFER TO DIVISION 04 FOR ADDTIONAL AND SPECIFIC INSPECTION AND TESTING REQUIREMENTS.
WOOD (IBC 1705.5, 1705.11.1 AND 17.05.12.1)				W.1. SPECIAL INSPECTION IS NOT REQUIRED FOR WOOD SHEAR WALLS, WOOD DIAPHRAGMS, INCLUDING NAILING, & BOLTING, AND OTHER FASTENING TO OTHER COMPONENTS WHERE THE SPACING OF THE SHEATHING FASTENERS IS GREATER THAN 4"o.c. WHERE NAIL SPACING IS 4" o.c. OR CLOSER, VERIFY THE NOMINAL SIZE OF FRAMING MEMBERS AT ADJOINING PANEL EDGES, THE NAIL OR STAPLE DIAMETER AND LENGTH, NUMBER OF FASTENER LINES, AND SPACING BETWEEN FASTENERS IN EACH LINE AND AT EDGE MARGINS. ADDITIONALLY, VERIFY SILL PLATE AND ANCHOR BOLTS DIAMETER, SPACING, PLATE WASHER SIZE AND LOCATION. SIMILAR INFORMATION IS TO BE GATHERED FOR OTHER FASTENING COMPONENTS.
SHEAR WALL & DIAPHRAGM NAILING		●	REFERENCE NOTE W1	
DRAG STRUTS		●		
HOLDOWNS		●		
SOILS (IBC 1705.5)			REFERENCE NOTE F1	F1. SPECIAL INSPECTION OF SOILS SHALL REFERENCE THE APPROVED SOILS REPORT TO DETERMINE COMPLIANCE. F2. WHERE SOILS REPORT IS NOT PROVIDED SPECIAL INSPECTIONS ARE REQUIRED TO VERIFY THAT THE IN-PLACE DRY DENSITY OF THE COMPACTED FILL IS NOT LESS THAN 95 PERCENT OF THE MAXIMUM DRY DENSITY AT OPTIMUM MOISTURE CONTENT DETERMINED IN ACCORDANCE WITH ASTM D 1557. F3. REFER TO DIVISION 31 OF SPECIFICATIONS FOR ADDITIONAL AND SPECIFIC TESTING AND INSPECTION REQUIREMENTS. REFER TO DIVISION 6 OF THE SPECIFICATIONS FOR ADDITIONAL AND SPECIFIC TESTING AND INSPECTION REQUIREMENTS.
VERIFY ADEQUATE MATERIALS BELOW FOOTINGS		●	REFERENCE NOTE F1	
EXCAVATIONS EXTEND TO PROPER DEPTH AND REACH PROPER MATERIAL		●	REFERENCE NOTE F2	
CLASSIFY & TEST CONTROLLED FILL MATERIALS		●	REFERENCE NOTE F2	
PERFORM MATERIALS, DENSITIES, AND LIFT THICKNESSES DURING PLACEMENT AND COMPACTION OF CONTROLLED FILL.	●		REFERENCE NOTE F1	
PROPERLY PREPARED SITE AND SUB-GRADE PRIOR TO FILL.		●	REFERENCE NOTE F1	
FABRICATORS (IBC 1704.2.5)				
	●			IF FABRICATOR IS APPROVED, ON-SITE INSPECTION IS NOT REQUIRED BUT A CERTIFICATE OF COMPLETION MUST BE PROVIDED TO THE BUILDING OFFICIAL (IBC 1704.2.5)
PREFABRICATED METAL PLATE WOOD TRUSSES:				
THE INSPECTOR SHALL VERIFY THAT THE FABRICATOR MAINTAINS DETAILED FABRICATION AND QUALITY CONTROL PROCEDURES THAT PROVIDE A BASIS OF INSPECTION CONTROL OF THE WORKMANSHIP AND THE FABRICATOR'S ABILITY TO CONFORM TO APPROVED CONSTRUCTION DOCUMENTS AND REFERENCED STANDARDS.		●		
REFER TO SPECIFICATIONS FOR REQUIRED "TRUSS PLANT CERTIFICATION FORM" AND FOR INSPECTION OF PREFABRICATED WOOD TRUSSES LONGER THAN 60'-0" LONG		●		

GENERAL SPECIAL INSPECTION NOTES :

1. THE ITEMS MARKED WITH A "●" IN THE SPECIAL INSPECTION SCHEDULE SHALL BE INSPECTED IN ACCORDANCE WITH IBC CHAPTER 17 BY A CERTIFIED SPECIAL INSPECTOR FROM AN ESTABLISHED TESTING AGENCY. FOR MATERIAL SAMPLING AND TESTING REQUIREMENTS, REFER TO THE MATERIAL SAMPLING AND TESTING SECTION. AND THE PROJECT SPECIFICATIONS. THE TESTING AGENCY SHALL SEND COPIES OF ALL STRUCTURAL TESTING AND INSPECTION REPORTS DIRECTLY TO THE ARCHITECT, ENGINEER, CONTRACTOR, AND BUILDING OFFICIAL. ANY ITEMS WHICH FAIL TO COMPLY WITH THE APPROVED CONSTRUCTION DOCUMENTS SHALL IMMEDIATELY BE BROUGHT TO THE ATTENTION OF THE CONTRACTOR FOR CORRECTION. IF DISCREPANCIES ARE NOT CORRECTED, THEY SHALL BE BROUGHT TO THE ATTENTION OF THE BUILDING OFFICIAL, ARCHITECT, AND ENGINEER PRIOR TO COMPLETION OF THAT PHASE OF WORK. SPECIAL INSPECTION TESTING REQUIREMENTS APPLY EQUALLY TO ALL BIDDER DESIGNED COMPONENTS.
2. ANY CONSTRUCTION OR MATERIAL THAT HAS FAILED INSPECTION SHALL BE SUBJECT TO REMOVAL AND REPLACEMENT.
3. CONTINUOUS SPECIAL INSPECTION MEANS THE FULL-TIME OBSERVATION OF WORK REQUIRING SPECIAL INSPECTION BY AN APPROVED SPECIAL INSPECTOR WHO IS PRESENT IN THE AREA WHERE THE WORK IS BEING PERFORMED. PERIODIC SPECIAL INSPECTION MEANS THE PART-TIME OR INTERMITTENT OBSERVATION OF WORK REQUIRING SPECIAL INSPECTION BY AN APPROVED SPECIAL INSPECTOR WHO IS PRESENT IN THE AREA WHERE THE WORK HAS BEEN OR IS BEING PERFORMED AND AT THE COMPLETION OF THE WORK. (IBC SECTION 202)

STATEMENT OF SPECIAL INSPECTION

1. SPECIAL INSPECTIONS AND STRUCTURAL TESTING SHALL BE PROVIDED BY AN INDEPENDENT AGENCY EMPLOYED BY THE OWNER FOR THE ITEMS IDENTIFIED IN THIS SECTION AND IN OTHER AREAS OF THE APPROVED CONSTRUCTION PLANS AND SPECIFICATIONS, UNLESS WAIVED BY THE BUILDING OFFICIAL (SEE IBC CHAPTER 17).
2. THE NAMES AND CREDENTIALS OF THE SPECIAL INSPECTORS TO BE USED SHALL BE SUBMITTED TO THE BUILDING OFFICIAL FOR APPROVAL.
3. DUTIES OF THE SPECIAL INSPECTOR:
   a. THE SPECIAL INSPECTOR SHALL REVIEW ALL WORK LISTED ABOVE FOR CONFORMANCE WITH THE APPROVED CONSTRUCTION PLANS AND SPECIFICATIONS AND THE IBC.
   b. THE SPECIAL INSPECTOR SHALL FURNISH SPECIAL INSPECTION REPORTS TO THE ENGINEER OF RECORD, CONTRACTOR, OWNER AND BUILDING OFFICIAL ON A WEEKLY BASIS, OR MORE FREQUENTLY AS REQUIRED BY THE BUILDING OFFICIAL. ALL ITEMS NOT IN COMPLIANCE SHALL BE BROUGHT TO THE IMMEDIATE ATTENTION OF THE CONTRACTOR FOR CORRECTION, AND IF UNCORRECTED, TO THE ENGINEER OF RECORD AND THE BUILDING OFFICIAL.
   c. ONCE CORRECTIONS HAVE BEEN MADE BY THE CONTRACTOR, THE SPECIAL INSPECTOR SHALL SUBMIT A FINAL SIGNED REPORT TO THE BUILDING OFFICIAL STATING THAT THE WORK REQUIRING SPECIAL INSPECTION WAS, TO THE BEST OF THE SPECIAL INSPECTOR'S KNOWLEDGE, IN CONFORMANCE WITH THE APPROVED CONSTRUCTION PLANS AND SPECIFICATIONS AS WELL AS THE APPLICABLE WORKMANSHIP PROVISIONS OF THE IBC.
4. DUTIES AND RESPONSIBILITIES OF THE CONTRACTOR:
   a. THE CONTRACTOR SHALL SUBMIT A WRITTEN STATEMENT OF RESPONSIBLITY TO THE OWNER AND THE BUILDING OFFICIAL PRIOR TO THE COMMENCEMENT OF WORK. IN ACCORDANCE WITH IBC 1704.4, THE STATEMENT OF RESPONSIBILITY SHALL CONTAIN ACKNOWLEDGEMENT OF THE SPECIAL INSPECTION REQUIREMENTS CONTAINED WITHIN THE "STATEMENT OF SPECIAL INSPECTIONS".
   b. THE CONTRACTOR SHALL NOTIFY THE RESPONSIBLE SPECIAL INSPECTOR THAT WORK IS READY FOR INSPECTION AT LEAST ONE WORKING DAY (24 HOURS MINIMUM) BEFORE SUCH INSPECTION IS REQUIRED.
   c. ALL WORK REQUIRENG SPECIAL INSPECTION SHALL REMAIN ACCESSIBLE AND EXPOSED UNITL IT HAS BEEN OBSERVED BY THE SPECIAL INSPECTOR.
5. PLEASE SEE THE "SPECIAL INSPECTION SCHEDULE" FOR THE TYPES, EXTENTS AND FREQUENCY OF SPECIFIC ITEMS REQUIRING SPECIAL INSPECTIONS AND STRUCTURAL TESTS AS PART OF THIS PROJECT.

SCHEDULE D

LAP SPLICE SCHEDULE

BAR SIZE	BAR OVERLAP	BAR SIZE	BAR OVERLAP	BAR SIZE	BAR OVERLAP
#3	18"	#4	24"	#5	30"
#6	36"	#7	42"	#8	48"

SCHEDULE E

CONCRETE PROTECTION FOR REINFORCEMENT

CONCRETE PLACED AGAINST AND PERMANENTLY EXPOSED TO EARTH	ALL APPLICATIONS EXCEPT SLABS ON GRADE	3"
	SLABS ON GRADE - CLEAR DISTANCE FROM TOP OF SLAB	1"
CONCRETE EXPOSED TO EARTH OR WEATHER	#6 BARS AND LARGER	2"
	#5 BARS AND SMALLER	1 1/2"
NOTES	TOLERANCE FOR CONCRETE COVER AND REINFORCEMENT LOCATION IS ±3/8"	

SCHEDULE F

STEEL ANGLE LINTEL SCHEDULE FOR VENEER

CLEAR OPENING	SIZE OF ANGLE
UP TO 7'-0"	4" x 4" x 3/8"
7'-1" TO 9'-0"	6" x 4" x 5/16"
9'-1" TO 10'-0"	6" x 4" x 5/16"
10'-1" TO 11'-0"	6 x 4" x 3/8"
11'-1" TO 12'-0"	6" x 4" x 7/16"
12'-1" TO 13'-0"	8" x 4" x 7/16"
13'-1" AND OVER	REQUIRES SPECIAL ANALYSIS, CONTACT ENGINEER

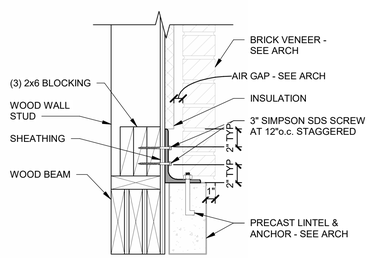

NOTES:

1. LINTELS CARRY BRICK VENEER OR STONE ONLY.
2. WHERE FLOORS, ROOFS, OR CONCENTRATED LOADS OCCUR ABOVE, FURTHER ANALYSIS IS NECESSARY. CONTACT ARCHITECT AND ENGINEER.
3. ANGLES ARE TO BE HOT DIPPED GALVANIZED AND "PAINTED".
4. ANGLE ARE TO BE ORIENTED WITH 4" LEG HORIZONTAL.
5. ANCHOR ANGLES TO BEAMS, HEADERS, TOP-PLATES, ETCETERA WITH (2) 3" SDS SCREW AT 12"o.c., STAGGERED.
6. AT LOCATIONS WHERE ANGLE IS USED FOR BRICK VENEER OR STONE AT STUD WALL, USE 3x12 BLOCKING BEHIND ANGLE LOCATION.
7. AT LOCATIONS WHERE ANGLE EXTENDS BEYOND OPENING AND BEARS ON BRICK PROVIDE 1" OF BEARING EACH END FOR EACH FOOT OF SPAN. MINIMUM BEARING OF 6" EACH SIDE OF OPENING.

bhd ARCHITECTS
www.bhdarchitects.com
Phone 801.571.0010
Fax 801.571.0303
Toll Free 888.571.0010
65 East Wadsworth Park Drive
Suite 205 Draper, Utah 84020

Matthew C. McBride No. 353893 8/14/24 STATE OF UTAH

THE CHURCH OF JESUS CHRIST OF LATTER-DAY SAINTS

Springwater 9
Vineyard UT Springwater Stake

Approx. 542 South Geneva Road
Vineyard, Utah 84059

Owner #: 502-2004
Plan Series: G300-MH-11
County Parcel: 39-228:0001
BHD #: 2346
Date: 15 Aug 2024

Drawing Issue and Revision Schedule

#	Date	Description
1	15 Aug 2024	Bid Documents

SCHEDULES

S602

8/15/2024 11:24:23 AM

SCHEDULE A

STRUCTURAL WOOD WALL SCHEDULE

MARK	NOMINAL STUD SIZE[11,13]	STUD SPACING	SILL PLATE[4,5]	TOP PLATES[19]	WOOD SHEATHING THICKNESS[12,14,15,16,17,18]	COMMENT	EDGE NAILING[5,6,7,8]	SILL PLATE ATTACHMENT[1,2]
W4-A	2x4	16"	2x4	(2) 2x4	---		---	POWDER ACTUATED FASTENER AT 24" ON CENTER[3]
W6-A	2x6	16"	2x6	(2) 2x6	---		---	POWDER ACTUATED FASTENER AT 24" ON CENTER
W6-B[9,11]	2x6	16"	2x6[11]	(3) 2x6	15/32"		4"	5/8" DIAMETER x 8" EMBEDMENT ANCHOR AT 32" ON CENTER
W6-C[9,11]	2x6	16"	2x6	(3) 2x6	15/32"		3"	5/8" DIAMETER x 8" EMBEDMENT ANCHOR AT 32" ON CENTER
W6-D	1 3/4" x 5 1/2" LVL	16"	1 1/2"x5 1/2" SCL	(2) 1 1/2"x5 1/2" SCL	---		---	5/8" DIAMETER x 8" EMBEDMENT ANCHOR AT 32" ON CENTER
W6-E	1 3/4" x 5 1/2" LVL	16"	1 1/2"x5 1/2" SCL	(2) 1 1/2"x5 1/2" SCL	15/32"		4 1/2"	5/8" DIAMETER x 8" EMBEDMENT ANCHOR AT 32" ON CENTER
W8-A	1 3/4" x 7 1/4" LVL	16"	1 1/2"x7 1/4" SCL	(2) 1 1/2"x7 1/4" SCL	15/32"		4 1/2"	5/8" DIAMETER x 8" EMBEDMENT ANCHOR AT 32" ON CENTER
W10-A	1 1/2" x 9 1/2" SCL	16"	1 1/2"x9 1/2" SCL	(2) 1 1/2"x9 1/2" SCL	15/32"		2"	5/8" DIAMETER x 8" EMBEDMENT ANCHOR AT 16" ON CENTER
W10-B	1 3/4" x 9 1/2" LVL	16"	1 1/2"x9 1/2" SCL	(2) 1 1/2"x9 1/2" SCL	15/32"		4 1/2"	5/8" DIAMETER x 8" EMBEDMENT ANCHOR AT 32" ON CENTER
W10-C[9,11]	1 3/4" x 9 1/2" LVL	16"	3"x9 1/2" SCL[11]	(2) 1 1/2"x9 1/2" SCL	(2) 19/32"		3"	5/8" DIAMETER x 8" EMBEDMENT ANCHOR AT 16" ON CENTER
W10-D[9,11]	1 3/4" x 9 1/2" LVL	16"	3"x9 1/2" SCL[11]	(2) 1 1/2"x9 1/2" SCL	(2) 15/32"		3"	5/8" DIAMETER x 8" EMBEDMENT ANCHOR AT 16" ON CENTER
W12-A	1 3/4" x 11 7/8" LVL	12"	1 1/2"x11 7/8" SCL	(2) 1 1/2"x11 7/8" SCL	15/32"		4 1/2"	5/8" DIAMETER x 8" EMBEDMENT ANCHOR AT 24" ON CENTER
W12-B	(2) 1 3/4" x 11 7/8" LVL[21]	16"	1 1/2"x11 7/8" SCL	(2) 1 1/2"x11 7/8" SCL	15/32"		4 1/2"	5/8" DIAMETER x 8" EMBEDMENT ANCHOR AT 32" ON CENTER
W12-C	1 3/4" x 11 7/8" LVL	16"	1 1/2"x11 7/8" SCL	(2) 1 1/2"x11 7/8" SCL	---		---	POWDER ACTUATED FASTENER AT 24" ON CENTER[3]

NOTES:
1. ALL ANCHOR BOLTS AT SILL PLATE ATTACHMENT SHALL HAVE A 1/4" x 3" x 3" MINIMUM WASHER BETWEEN THE SILL PLATE AND THE ANCHOR NUT. SEE ANCHOR BOLT PLATE WASHER DETAIL ON THIS SCHEDULE.
2. 5/8" DIAMETER SILL PLATE ANCHOR BOLTS MAY BE REPLACED WITH POST-INSTALLED ADHESIVE ANCHORS, POST-INSTALLED DRILLED-IN MECHANICAL ANCHORS (EXPANSION BOLTS) OR POST-INSTALLED SCREW ANCHORS. REFER TO SPECIFICATION SECTION 03 1511 FOR ACCEPTABLE PRODUCTS. POST-INSTALLED ANCHORS SHALL BE INSTALLED AS DEEP AS HAD BEEN REQUIRED FOR CAST-IN-PLACE SILL PLATE ANCHOR BOLTS. POWDER ACTUATED FASTENERS ARE NOT ALLOWED FOR SHEAR WALL SILL PLATE ATTACHMENT.
3. POWDER ACTUATED FASTENERS TO BE HILTI 'X-U P8' WITH MINIMUM EMBEDMENT OF 1 1/4" OR EQUIVALENT.
4. ALL WOOD IN CONTACT WITH CONCRETE SHALL BE PRESSURE TREATED.
5. FASTENERS FOR PRESERVATIVE AND TREATED WOOD SHALL BE HOT DIPPED ZINC COATED GALVANIZED STEEL, STAINLESS STEEL, SILICONE BRONZE, OR COPPER, UNLESS WOOD IS BORATE TREATED.
   a. EXCEPTION: PLAIN CARBON STEEL FASTENERS, INCLUDING NUTS AND WASHERS, IN SBX/DOT AND ZINC BORATE PRESERVATIVE-TREATED WOOD IN ANY INTERIOR, DRY ENVIRONMENT IS PERMITTED.
6. ALL NAILS TO BE HEAD MARKED FOR EASY IDENTIFICATION AFTER INSTALLATION.
7. ALL NAILS ATTACHING WOOD SHEATHING TO WALLS TO BE 10d (3" X 0.148" DIAMETER).
8. FIELD NAIL SPACING TO BE 6" ON CENTER.
9. SPECIAL INSPECTION IS REQUIRED.
10. NOT USED
11. WHERE NAIL SPACING IS 4" OR LESS, MEMBERS AT ADJOINING PANEL EDGES SHALL NOT BE LESS THAN 3" NOMINAL. JOINT AND SILL NAILING SHALL BE STAGGERED.
    a. AS AN ALTERNATE TO USING A 3x NOMINAL STUD OR SILL PLATE, USE (2) 2x MEMBERS SPIKED TOGETHER WITH 16d NAILS AT 3" ON CENTER, STAGGERED.
       1. AT WALLS REQUIRING 3x SILL PLATES, IT IS PERMISSIBLE TO USE A TREATED 2x MEMBER IN CONTACT WITH THE CONCRETE AND AN UNTREATED 2x MEMBER ON TOP.
    b. WHERE WOOD SHEATHING IS APPLIED ON BOTH FACES OF A WALL AND NAIL SPACING IS LESS THAN 6" ON CENTER ON EITHER SIDE, WOOD SHEATHING JOINTS SHALL BE OFFSET TO FALL ON DIFFERENT STUDS. ALTERNATIVELY, THE WIDTH OF THE NAILED FACE OF STUDS SHALL BE 3" NOMINAL OR GREATER AT ADJOINING WOOD SHEATHING EDGES AND NAILS AT ALL WOOD SHEATHING EDGES SHALL BE STAGGERED.
12. AT EXTERIOR WALLS, COORDINATE WITH ARCHITECTURAL DETAILS WHERE SHEATHING IS REQUIRED TO EXTEND HIGHER THAN TOP PLATES FOR OTHER EXTERIOR FINISHES.
13. FOR LUMBER WALLS TALLER THAN 15'-0", CHANGE LUMBER MATERIAL TO SCL MATERIAL IF NOT ALREADY SCHEDULED AS SUCH.
14. WALL SHEATHING MAY BE INSTALLED WITH THE LONG DIRECTION HORIZONTAL OR VERTICAL.
15. SHEATHING MAY BE INSTALLED IN STACKED INSTEAD OF RUNNING PATTERN AT CONTRACTOR'S OPTION.
16. ALL SHEATHING SHALL HAVE A SPAN RATING OF 24/16 OR BETTER UNLESS OTHERWISE NOTED.
17. ALL WALL SHEATHING SHALL COMPLY WITH PS1-95 OR PS2-92.
18. SOLID BLOCK ALL WOOD WALL SHEATHING PANEL JOINTS, SEE BLOCKING DETAIL THIS SCHEDULE.
19. SEE 1/S521 FOR TOP PLATE SPLICE DETAIL.
20. FOR INTERIOR WALLS LOCATE ANCHOR BOLTS IN CENTER OF WALL. AT EXTERIOR WALLS LOCATE ANCHOR BOLTS FOLLOWING THE PROVIDED SCHEDULE BELOW. AT DOUBLE SIDED WALL, REFER TO ANCHOR BOLT PLATE WASHER DETAIL FOR MORE INFORMATION.
21. ATTACH TWO WALL STUDS TOGETHER AS SHOWN BELOW IN BLOCKING DETAIL.

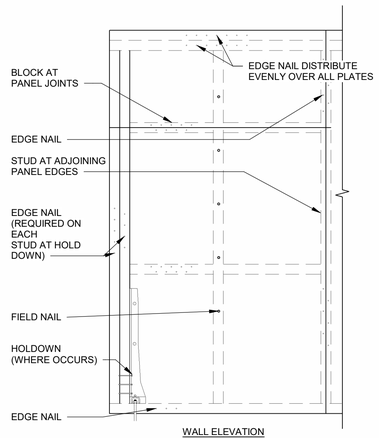

WALL ELEVATION

NOMINAL STUD WALL	DISTANCE FROM INSIDE FACE OF FOUNDATION WALL TO CENTER OF BOLT
2x6	3"
2x8	4"
2x10	6 1/2"
2x12	9"

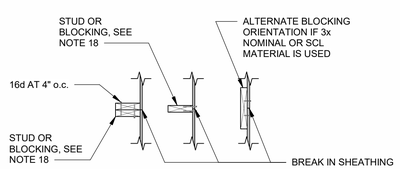

BLOCKING DETAIL

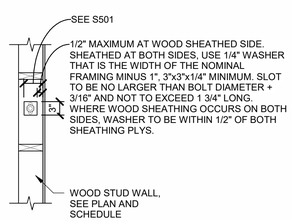

ANCHOR BOLT PLATE WASHER DETAIL

SCHEDULE B

WOOD BEAM SCHEDULE

MARK	SIZE[2,3]	MATERIAL	JAMB[1,4,7]		COMMENTS
			BEARING STUDS[5]	KING STUDS[6]	
BM-1	(3) 2x6	DF-L #2	(1)	(1)	TYPICAL EXTERIOR WINDOW AND DOOR HEADER
BM-1A	(7) 2x6	DF-L #2	(1)	(1)	EXTERIOR HEADER AT 12" WALL
BM-2	(2) 2x6	DF-L #2	(1)	(1)	TYPICAL INTERIOR DOOR HEADER
BM-3	(3) 1 3/4" x 9 1/2"	SCL	(2)	(2)	INTERIOR DOOR HEADER
BM-4	(3) 2x8	DF-L #2	(2)	(1)	INTERIOR DOOR HEADER
BM-5	(5) 1 3/4" x 9 1/4"	SCL	(2)	(2)	CHAPEL WINDOW HEADER
BM-6	(2) 1 3/4" x 9 1/4"	SCL	(2)	(2)	INTERIOR DOOR HEADER
BM-7	(3) 1 3/4" x 11 7/8"	SCL	(2)	(1)	BEAM SPANNING FOYER
BM-8	5 1/8" x 19 1/2"	24F-V4	(2)	(4)	PARTITION DOOR SUPPORT ABOVE PLATFORM
BM-10					NOT USED
BM-11	(4) 1 3/4" x 9 1/2"	SCL	(4)	(--)	ROOM 132, 133, 134 PARTITION DOOR BEAM
BM-12	(3) 1 3/4" x 11 7/8"	SCL	(2)	(2)	ROOF TRUSS SUPPORT
BM-13	(3) 1 3/4" x 14"	SCL	(2)	(3)	EXTERIOR MAIN SIDE ENTRY BEAM
BM-14	(3) 1 3/4" x 9 1/2"	SCL	(2)	(3)	HIGH BEAM AT STORE FRONT AT MAIN SIDE ENTRY
BM-15	(6) 2x8	DF-L #2	(2)	(2)	INSIDE STOREFRONT AT MAIN SIDE ENTRY
BM-16	(4) 2x8	DF-L #2	(2)	(3)	LOW BEAM AT STORE FRONT AT MAIN SIDE ENTRY
BM-17	(3) 1 3/4" x 11 7/8"	SCL	(2)	(3)	BACK OVERBUILD WALL POP-OUT
BM-18	(3) 2x10	DF-L #2	(2)	(3)	BACK ENTRY ABOVE STOREFRONT
BM-19	(2) 2x8	DF-L #2	(1)	(1)	INTERIOR BACK ENTRY ABOVE STOREFRONT
BM-20	(2) 1 3/4" x 11 7/8"	SCL	(2)	(1)	ROOF BEAM AT BACK SUPPORT
BM-21					NOT USED
BM-22	(2) 1 3/4" x 20"	SCL	--	--	SMALL SIDE OVERBUILD TRUSS SUPPORT
BM-23	(2) 2x8	DF-L #2	(1)	(1)	FOYER LIGHT COVE
BM-24	(4) 1 3/4"x14"	SCL	--	--	STEEPLE BEAM - SEE S401

NOTES:
1. SEE STRUCTURAL WOOD WALL SCHEDULE FOR JAMB MATERIAL AND NOMINAL SIZE.
2. USE FILLERS AS NEEDED TO HAVE ALL BEAMS OR HEADERS MATCH WIDTH OF WALL IN WHICH BEAM IS LOCATED.
3. BEAMS OF MULTIPLE MEMBERS MAY BE REPLACED WITH A SINGLE MEMBER OF EQUIVALENT SIZE AND MATERIAL PROPERTIES.
4. SEE NAILING PATTERN SHOWN IN WOOD JAMB FASTENING FOR MULTIPLE-PLY BEARING AND KING STUDS.
5. USE 16d NAILS TO BUILD UP 2 OR 3 STUD COLUMNS.
   - ADJACENT NAILS ARE TO BE DRIVEN FROM OPPOSING SIDES OF COLUMN.
   - 3 1/2" WIDE COLUMNS REQUIRE ONE ROW OF STAGGERED NAILS. ALL OTHER COLUMNS REQUIRE TWO ROWS OF NAILS
6. KING STUDS EXTEND FROM TOP OF SILL PLATE TO BOTTOM OF TOP WALL PLATES.
7. BEARING STUDS EXTEND FROM TOP OF SILL PLATE TO BOTTOM OF BEAM OR HEADER.

WOOD BEAM FASTENING AND ATTACHMENT

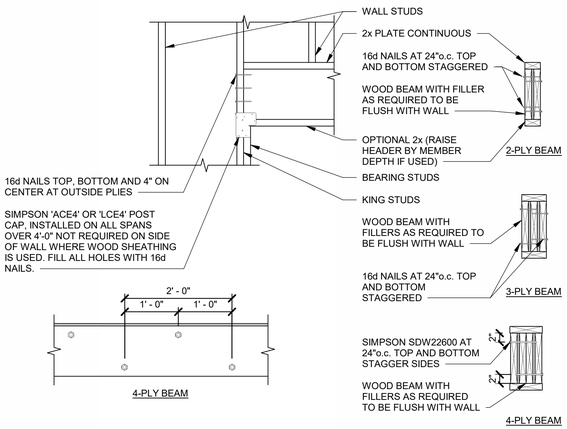

WOOD JAMB FASTENING

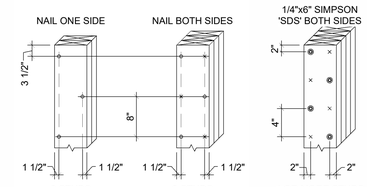

LEGEND
° NAIL OR SCREW FROM THIS SIDE
× NAIL OR SCREW FROM OPPOSITE SIDE

bhd ARCHITECTS
www.bhdarchitects.com
Phone 801.571.0010
Fax 801.571.0303
Toll Free 888.571.0010
65 East Wadsworth Park Drive
Suite 205 Draper, Utah 84020

Matthew C. McBride No. 353893 8/14/24 STATE OF UTAH

THE CHURCH OF JESUS CHRIST OF LATTER-DAY SAINTS

Springwater 9
Vineyard UT Springwater Stake

Approx. 542 South Geneva Road
Vineyard, Utah 84059

Owner #: 502-2004
Plan Series: G300-MH-11
County Parcel: 39:228:0001
BHD #: 2346
Date: 15 Aug 2024

Drawing Issue and Revision Schedule

#	Date	Description
1	15 Aug 2024	Bid Documents

SCHEDULES

S603

8/15/2024 11:26:25 AM

SCHEDULE F

TYPICAL BLOCKING SCHEDULE

DOOR STOPS	STAIR BLOCKING
VISUAL DISPLAYS	DECORATIVE METAL BETWEEN WINDOWS
MARKER BOARDS	DRINKING FOUNTAINS
TACK BOARDS	WALL HUNG SINKS
BABY CHANGING STATIONS	ROSTRUM
EXIT SIGNS	DECORATION HOOKS
CHAIR RAIL	JANITOR SHELVING
COAT RACKS	RA VENTS AT ENTRIES
CABINETS	COLUMNS AT ENTRIES
SOUND PANELS	CAN LIGHTS AT ENTRIES
TOILET PARTITIONS	HYMN BOOK SHELVES
HANDICAP BARS	DIMMER SWITCHES IN GYM
BATHROOM ACCESSORIES	CURTAIN AT STAGE
TOWEL DISPENSORS	CURTAINS IN OFFICES
TOILET PAPER HOLDERS	JANITOR TAP AND HOSE HARDWARE
NAPKIN HOLDERS	FONT MIRRORS
SHELVES	FONT HANDRAILS
MIRRORS	FONT BENCHES
COUNTERS	CLOTHING HOOKS
COUNTER BRACKETS	FONT GLASS SCREEN
ACCESS PANELS	CHAIR STORAGE SHELVING
HANDRAILS	INTERIOR SOFFIT FOR SIX PIECE CORNICE
FIRE CABINETS	WATER HEATERSEISMIC STRAPS (2) UNISTRUT. RUNNING PARALLEL TO FRAMING
WALL MOUNTED HANDRAILS	

SCHEDULE D

FRAMING NAILING REQUIREMENTS SCHEDULE

(REFER TO 2021 IBC TABLE 2304.10.2)

CONNECTION AND LOCATION	NAILING	CONNECTION AND LOCATION	NAILING
JOIST TO SILL OR GIRDER (TOENAIL)	3- 8d COMMON (2 1/12" x 0.131") 3- 3" x 0.131" NAILS	DOUBLE STUDS (FACE NAIL)	16d (3 1/2"x0.135") AT 24"o.c. 3"x0.131" NAILS AT 8"o.c.
BRIDGING TO JOIST (TOENAIL EACH END)	2- 8d COMMON (2 1/2" x 0.131") 2- 3" x 0.131" NAILS	DOUBLE TOP PLATES (TYPICAL FACE NAIL)	16d (3 1/2"x0.135") AT 16"o.c. 3"x0.131" NAILS AT 12"o.c.
1"x6" SUBFLOOR OR LESS TO EACH JOIST (FACE NAIL)	2- 8d COMMON (2 1/2" x 0.131")	DOUBLE TOP PLATES (LAP SPLICE)	8- 16d COMMON (3 1/2"x0.162") 12- 3"x0.131" NAILS
WIDER THAN 1"x6" SUBLOOR TO EACH JOIST (FACE NAIL)	2- 8d COMMON (2 1/2" x 0.131")	BLOCKING BETWEEN JOISTS OR RAFTERS TO TOP PLATE (TOENAIL)	3- 8d COMMON (2 1/2"x0.131") 3- 3"x0.131" NAILS
2" SUBFLOOR TO JOIST OR GIRDER (BLIND AND FACE NAIL)	2- 16d COMMON (3 1/2" x 0.162")	RIM TO TOP PLATE (TOENAIL)	8d (2 1/2"x0.131") 3"x0.131" NAILS AT 6"o.c.
SOLE PLATE TO JOIST OR BLOCKING (TYPICAL FACE NAIL)	16d (3 1/2" x 0.135") AT 16"o.c. 3"x0.131" NAILS AT 8"o.c.	TOP PLATES, LAPS AND INTERSECTIONS (FACE NAIL)	2- 16d COMMON (3 1/2"x0.162") 3- 3"x0.131" NAILS
SOLE PLATE TO JOIST OR BLOCKING AT BRACE WALL PANEL (BRACED WALL PANELS)	3- 16d (3 1/2" x 0.135") AT 16"o.c. 4- 3"x0.131" NAILS AT 16"o.c.	CONTINUOUS HEADER, TWO PIECES (16"o.c. ALONG EDGE)	16d COMMON (3 1/2"x0.162")
TOP PLATE TO STUD (END NAIL)	2- 16d COMMON (3 1/2" x 0.162") 3- 3"x0.131" NAILS	CEILING JOISTS TO PLATE (TOENAIL)	3- 8d COMMON (2 1/2"x0.131") 3- 3"x0.131" NAILS
STUD TO SOLE (SILL) PLATE (TOENAIL)	4- 8d COMMON (2 1/2"x0.131") 4- 3"x0.131" NAILS	CONTINUOUS HEADER TO STUD (TOENAIL)	4- 8d COMMON (2 1/2"x0.131")
(END NAIL)	2- 16d COMMON (3 1/2" x 0.162") 3- 3"x0.131" NAILS	DOUBLE SILL PLATES (FACE NAIL, STAGGER)	10d COMMON AT 12"o.c. EACH FACE
		BUILT-UP CORNER STUDS	16d (3 1/2"x0.162") AT 24"o.c. 3"x0.131" NAILS AT 16"o.c.

NOTES:
ALL FASTENERS FOR PRESERVATIVE AND FIRE RETARDANT TREATED WOOD SHALL BE HOT DIPPED ZINC COATED GALVANIZED STEEL, STAINLESS STEEL, SILICONE BRONZE, OR COPPER, UNLESS WOOD IS BORATE TREATED. EXCEPTION: PLAIN CARBON STEEL FASTENERS, INCLUDING NUTS AND WASHERS, IN SBX/DOT AND ZINC BORATE PRESERVATIVE-TREATED WOOD IN AN INTERIOR, DRY ENVIRONMENT ARE PERMITTED.

SCHEDULE C

WIND COMPONENTS AND CLADDING

WIND ZONE	COMPONENTS AND CLADDING NEGATIVE PRESSURE (PSF) EFFECTIVE WIND AREA (SQ FT.)				
	10 sq ft.	20 sq ft.	50 sq ft.	100 sq ft.	500 sq ft.
1, 2e	36.7	36.7	31.5	27.6	21.4
2n, 2r, & 3e	58.5	51.2	41.6	34.4	30.1
3r	68.3	57.5	43.2	43.2	43.2
4	27.9	26.8	25.2	24.1	21.4
5	34.5	32.2	29.1	26.8	21.4

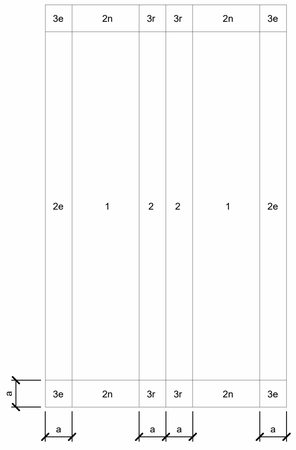

SCHEDULE E

SHEATHING TYPE AND NAILING SCHEDULE

LOCATION	SHEATHING	EDGE NAILING[1]	FIELD NAILING[1]	BOUNDARY NAILING[2]	BLOCKING AT PANEL EDGES
ROOF, UNBLOCKED	19/32" 40/20 SPAN RATING	10d AT 6"o.c.	10d AT 6"o.c.	10d AT 6"o.c.	NO
ROOF, BLOCKED[4] TYPE 1	19/32" 40/20 SPAN RATING	10d AT 6"o.c.	10d AT 6"o.c.	10d AT 4"o.c.	YES
EQUIPMENT[3] PLATFORM	23/32" 48/24 SPAN RATING T&G	10d AT 6"o.c.	10d AT 12"o.c.	10d AT 6"o.c.	NO
ROSTRUM[3]	(2) LAYERS 19/32" 40/20 SPAN RATING	10d AT 6"o.c.	10d AT 12"o.c.	10d AT 6"o.c.	NO
PLATFORM[3]	(2) LAYERS 19/32" 40/20 SPAN RATING	10d AT 6"o.c.	10d AT 12"o.c.	10d AT 6"o.c.	NO
WALLS	SEE WOOD WALL SCHEDULE				

NOTES:
1. SEE PARTIAL PLAN BELOW FOR LOCATION OF BOUNDARY, EDGE, AND FIELD NAILING.
2. ALL FASTENERS FOR PRESERVATIVE AND FIRE RETARDANT TREATED WOOD SHALL BE HOT DIPPED SINZ COATED GLAVANIZED STEEL, STAINLESS STEEL, SILICONE BRONZE, OR COPPER, UNLESS WOOD IS BORATE TREATED. EXCEPTION: PLAIN CARBON STEEL FASTENERS, INCLUDING NUTS AND WASHERS, IN SBX/DOT AND ZINC BORATE PRESERVATIVE- TREATED WOOD IN AN INTERIOR, DRY ENVIRONMENT ARE PERMITTED.
3. FOR EQUIPMENT PLATFORM, ROSTRUM, AND PLATFORM SHEATHING SHALL BE GLUED AND NAILED TO THE STRUCTURE.
4. SPECIAL INSPECTION REQUIRED.

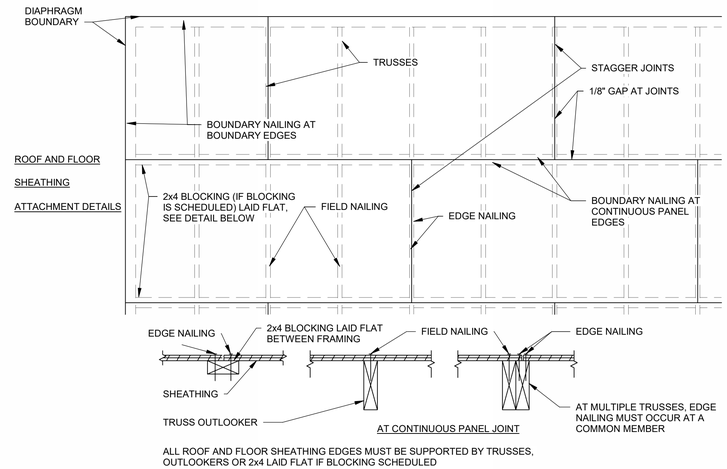

ALL ROOF AND FLOOR SHEATHING EDGES MUST BE SUPPORTED BY TRUSSES, OUTLOOKERS OR 2x4 LAID FLAT IF BLOCKING SCHEDULED

SCHEDULE A

REQUIRED NAIL TYPES

ALL NAILS NOTED ON THE DRAWINGS SHALL BE AS SHOWN BELOW, UNLESS NOTED OTHERWISE.

NAIL SIZE	STANDARD LENGTH (INCHES)	DIAMETER (INCHES)	MINIMUM PENETRATION REQUIRED INTO MAIN MEMBER (INCHES)
8d	2 1/2	.131	1 3/8
10d	3	.148	1 1/2
16d	3 1/4	.148	1 1/2

NOTES:
1. EXCEPT WHERE NOTED OTHERWISE, THE NUMBER AND SIZE OF NAILS CONNECTING WOOD MEMBERS SHALL NOT BE LESS THAN THAT SET FORT IN IBC TABLE 2304.9.1
   a. CONNECTION FOR MULTIPLE PIECES OF ENGINEERED LUMBER SHALL BE IN ACCORDANCE WITH MANUFACTURER SPECIFICATIONS.
   b. WHERE 16d COMMON NAILS ARE CALLED OUT IN IBC TABLE 2304.9.1 USE 16d BOX NAILS.
2. ALL NAILS NOTED ON THE DRAWINGS SHALL BE AS SHOWN UNLESS NOTED OTHERWISE; NAILS FOR 3RD PARTY HARDWARE SHALL BE AS REQUIRED BY MANUFACTURER OF HARDWARE.
3. ALL FASTENERS FOR PRESERVATIVE AND FIRE RETARDANT TREATED WOOD SHALL BE HOT DIPPED ZINC COATED GALVANIZED STEEL, STAINLESS STEEL, SILICONE BRONZE, OR COPPER, UNLESS WOOD IS BORATE TREATED. EXCEPTION: PLAIN CARBON STEEL FASTENERS, INCLUDING NUTS AND WASHERS, IN SBX/DOT AND ZINC BORATE PRESERVATIVE-TREATED WOOD IN AN INTERIOR, DRY ENVIRONMENT ARE PERMITTED.
4. NAILS USED IN SIMPSON HARDWARE (OR HARDWARE OF EQUAL VALUE) SHALL BE AS SPECIFIED BY THE MANUFACTURER.
5. OTHER FASTENERS MAY BE USED TO REPLACE NAILS BUT THEY MUST HAVE EQUIVALENT, OR LARGER, DIAMETERS AND PENETRATION LENGTHS.

SCHEDULE B

DEFERRED SUBMITTALS

FOR THE PURPOSE OF THIS SECTION, DEFERRED SUBMITTALS ARE DEFINED PER THE IBC. SUBMITTAL DOCUMENTS FOR DEFERRED SUBMITTAL ITEMS SHALL BE SUBMITTED TO THE ENGINEER, ARCHITECT, AND BUILDING OFFICIAL FOR THEIR REVIEW FOR GENERAL CONFORMANCE WITH THE DESIGN OF THE BUILDING. DEFERRED STRUCTURAL SUBMITTALS FOR THIS PROJECT ARE:
1. PREFABRICATED METAL PLATE WOOD TRUSSES
2. STEEPLE FRAMING

bhd ARCHITECTS
www.bhdarchitects.com
Phone 801.571.0010
Fax 801.571.0303
Toll Free 888.571.0010
65 East Wadsworth Park Drive
Suite 205 Draper, Utah 84020

LICENSED PROFESSIONAL ENGINEER — Matthew C. McBride No. 353893 — 8/14/24 — STATE OF UTAH

THE CHURCH OF JESUS CHRIST OF LATTER-DAY SAINTS

Springwater 9
Vineyard UT Springwater Stake

Approx. 542 South Geneva Road
Vineyard, Utah 84059

BHD #: 2346
County Parcel: 39-228:0001
Plan Series: C300-MH-11
Owner #: 502-2004
Date: 15 Aug 2024

Drawing Issue and Revision Schedule

#	Date	Description
1	15 Aug 2024	Bid Documents

SCHEDULES

S604

8/15/2024 11:26:26 AM

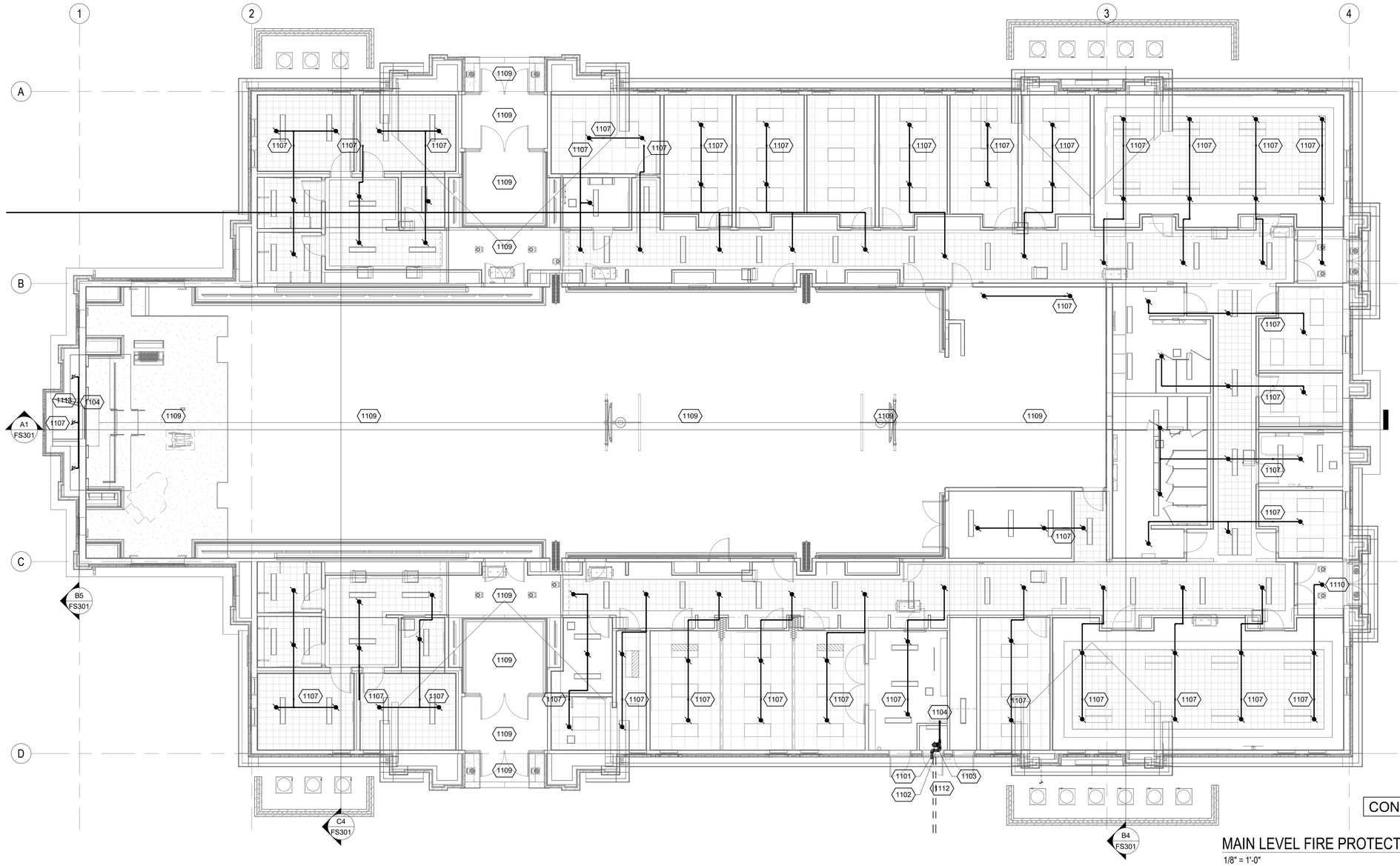

CONCEPTUAL LAYOUT

MAIN LEVEL FIRE PROTECTION PLAN

1/8" = 1'-0"

02
FS101

FIRE SPRINKLER LEGEND

	UPRIGHT HEAD ON LINE		PRESSURE GAUGE
	CONCEALED PENDENT HEAD	LT	LOW TEMPERATURE SENSOR PROVIDED BY DIVISION 28
	CONCEALED DRY PENDENT HEAD	TS	VALVE TAMPER SWITCH
	SIDE DSICHARGE ATTIC HEAD	FS	FLOW SWITCH
	DRY SIDEWALL HEAD RECESSED		FLEXIBLE COUPLING
	DRY SIDEWALL HEAD		SWAY BRACING
	SIDEWALL HEAD RECESSED		ANGLE VALVE
	SIDEWALL HEAD		PIPE SUPPORT
	TYCO MODEL AP ATTIC UPRIGHT HEAD		SPRINKLER PIPING
IT	INSPECTOR'S TEST VALVE		FIRE DEP. CONNECTION
	BALL VALVE 2" & SMALLER BUTTERFLY VALVE 2 1/2" & LARGER		PIPE IN FLOOR STRUCTURE
	PIPE UP / PIPE DOWN		

GENERAL NOTES

1 INSTALL FIRE PROTECTION PIPING AS SHOWN, WET-PIPE SYSTEM THROUGHOUT ALL AREAS OF THE BUILDING.

2 USE DRY-BARREL TYPE SPRINKLERS IN CANOPIES AND VESTIBULES WHEN SUPPLIED FROM WET SYSTEM.

3 OBTAIN APPROVAL FOR PIPING CHANGES FROM ARCHITECT AND ENGINEER.

4 RUN PIPING LEVEL OR SLOPED TO DRAIN AS DESIGNATED IN NFPA 13.

5 THE FIRE SPRINKLER SYSTEM SHALL BE DESIGNED PER THE REQUIREMENTS OF NFPA 13, LIGHT HAZARD FOR THE MAIN LEVEL AND ATTIC WITH THE EXCEPTION OF THE SERVING AREA, MECHANICAL, ELECTRICAL AND JANITOR AREAS WHICH SHALL BE DESIGNED AS ORDINARY HAZARD GROUP 1, AND THE PLATFORM THAT WILL BE DESIGNED AS ORDINARY HAZARD GROUP 2.

6 SPRINKLER HEAD SPACING:

6.1 LIGHT HAZARD: 225 SQ. FT.

6.2 ORDINARY HAZARD: 130 SQ. FT.

6.3 ATTIC: 130 SQ. FT. PER HEAD.

7 SEE SITE PLAN FOR UTILITY CONNECTION AND LOCATION OF FIRE HYDRANTS AND POST INDICATING VALVE, IF REQUIRED BY THE AUTHORITY HAVING JURISDICTION.

8 DO NOT ROUTE PIPING THRU STRUCTURAL MEMBERS OR MECHANICAL DUCT WORK EXCEPT AS SHOWN ON THE DRAWINGS.

9 SEE REFLECTED CEILING PLAN FOR EXACT LOCATION OF SPRINKLER HEADS. SPRINKLER HEADS DO NOT HAVE TO BE CENTERED IN THE ONE FOOT ACOUSTICAL TILES.

10 COORDINATE WITH FRAMER FOR SHEAR-WALL PENETRATIONS.

11 ALL SPRINKLERS SHALL BE QUICK-RESPONSE TYPE.

12 ALL WET-PIPE SYSTEM COMPONENTS (EXCEPT DRY SPRINKLERS) SHALL BE INSIDE THE BUILDING INSULATION ENVELOPE.

13 ALL REQUIRED DRAINS SHALL FOLLOW NFPA 13 REQUIREMENTS. DRAIN VALVES SHALL BE LOCATED TO PREVENT PUBLIC ACCESS AND SHALL BE PIPED TO DISCHARGE OUTSIDE THE BUILDING.

14 PROVIDE FIRE SPRINKLERS UNDER CANOPIES, STAIRS, AND ROSTRUM ONLY IF REQUIRED BY THE LOCAL FIRE MARSHAL. SPRINKLERS ARE NOT REQUIRED WITHIN CANOPIES THAT ARE FILLED WITH NON-COMBUSTIBLE INSULATION.

SHEET KEYNOTES

1101 UNDERGROUND SUPPLY MAIN. SEE SITE PLAN FOR CONTINUATION.

1102 LOW TEMPERATURE SENSOR IN RISER ROOM. SEE SHEET FA101.

1103 WET PIPE RISER. SEE SHEET FS501.

1104 RISE PIPE UP TO EQUIPMENT PLATFORM PIPING.

1107 SPRINKLERS FEED FROM EQUIPMENT LEVEL PIPING.

1109 SPRINKLERS IN THIS AREA ARE SHOWN ON EQUIPMENT LEVEL.

1110 USE VISTAULIC VICFLEX VS1 OR APPROVED EQUAL IN FREEZING LOCATIONS.

1112 FIRE DEPARTMENT CONNECTION WITH LOCAL FIRE WATER FLOW ALARM (ELECTRIC HORN/STROBE). SEE FA101 FOR WIRING.

1113 SPRINKLERS AT TOP OF ORGAN CHAMBER AND AT MID-POINT OF CHAMBER TYP. OF THREE CHAMBERS. REFER TO ORGAN CHAMBER SECTION SHEET FS301 DETAIL B5.

bhd ARCHITECTS
www.bhdarchitects.com
Phone 801.571.0010
Fax 801.571.0303
Toll Free 888.571.0010
65 East Wadsworth Park Drive
Suite 205 Draper, Utah 84020

THE CHURCH OF JESUS CHRIST OF LATTER-DAY SAINTS

Springwater 9
Vineyard UT Springwater Stake

Approx. 542 South Geneva Road
Vineyard, Utah 84059

BHD #: 2346
Date: 15 Aug 2024
County Parcel: 39-228:0001
Plan Series: C300-MH-11
Owner #: 502-2004

Drawing Issue and Revision Schedule

#	Date	Description
1	15 Aug 2024	Bid Documents

MAIN FLOOR FIRE SPRINKLER PLAN

FS101

8/13/2024 10:10:41 AM

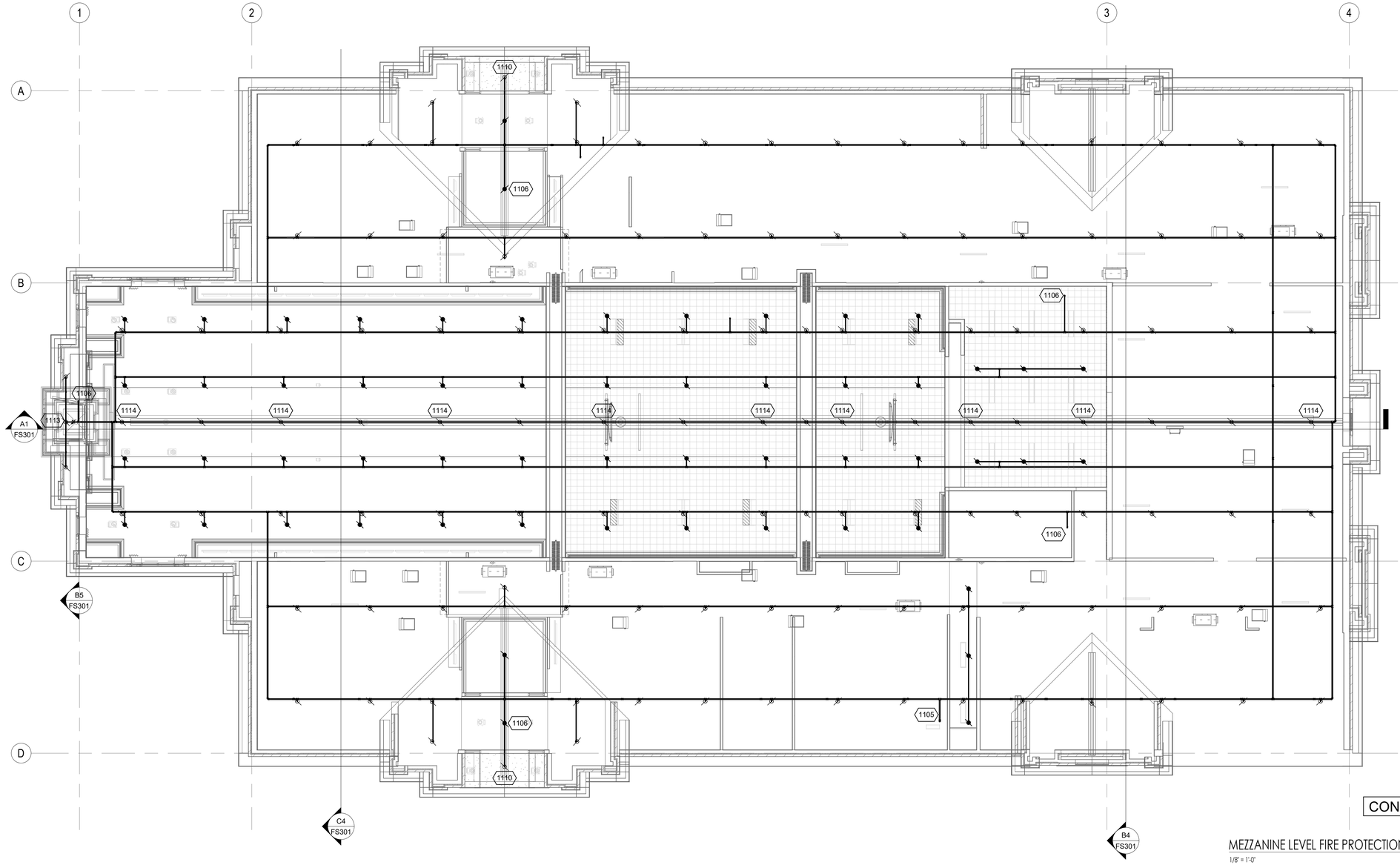

CONCEPTUAL LAYOUT

MEZZANINE LEVEL FIRE PROTECTION PLAN 02 FS102

1/8" = 1'-0"

FIRE SPRINKLER LEGEND

	UPRIGHT HEAD ON LINE		PRESSURE GAUGE
	CONCEALED PENDENT HEAD	LT	LOW TEMPERATURE SENSOR PROVIDED BY DIVISION 28
	CONCEALED DRY PENDENT HEAD	TS	VALVE TAMPER SWITCH
	SIDE DSICHARGE ATTIC HEAD	FS	FLOW SWITCH
	DRY SIDEWALL HEAD RECESSED		FLEXIBLE COUPLING
	DRY SIDEWALL HEAD		SWAY BRACING
	SIDEWALL HEAD RECESSED		ANGLE VALVE
	SIDEWALL HEAD		PIPE SUPPORT
	TYCO MODEL AP ATTIC UPRIGHT HEAD		SPRINKLER PIPING
IT	INSPECTOR'S TEST VALVE		FIRE DEP. CONNECTION
	BALL VALVE 2" & SMALLER BUTTERFLY VALVE 2 1/2" & LARGER		PIPE IN FLOOR STRUCTURE
	PIPE UP / PIPE DOWN		

GENERAL NOTES

1 INSTALL FIRE PROTECTION PIPING AS SHOWN, WET-PIPE SYSTEM THROUGHOUT ALL AREAS OF THE BUILDING.

2 USE DRY-BARREL TYPE SPRINKLERS IN CANOPIES AND VESTIBULES WHEN SUPPLIED FROM WET SYSTEM.

3 OBTAIN APPROVAL FOR PIPING CHANGES FROM ARCHITECT AND ENGINEER.

4 RUN PIPING LEVEL OR SLOPED TO DRAIN AS DESIGNATED IN NFPA 13.

5 THE FIRE SPRINKLER SYSTEM SHALL BE DESIGNED PER THE REQUIREMENTS OF NFPA 13, LIGHT HAZARD FOR THE MAIN LEVEL AND ATTIC WITH THE EXCEPTION OF THE SERVING AREA, MECHANICAL, ELECTRICAL AND JANITOR AREAS WHICH SHALL BE DESIGNED AS ORDINARY HAZARD GROUP 1, AND THE PLATFORM THAT WILL BE DESIGNED AS ORDINARY HAZARD GROUP 2.

6 SPRINKLER HEAD SPACING:

6.1 LIGHT HAZARD: 225 SQ. FT.

6.2 ORDINARY HAZARD: 130 SQ. FT.

6.3 ATTIC: 130 SQ. FT. PER HEAD.

7 SEE SITE PLAN FOR UTILITY CONNECTION AND LOCATION OF FIRE HYDRANTS AND POST INDICATING VALVE, IF REQUIRED BY THE AUTHORITY HAVING JURISDICTION.

8 DO NOT ROUTE PIPING THRU STRUCTURAL MEMBERS OR MECHANICAL DUCT WORK EXCEPT AS SHOWN ON THE DRAWINGS.

9 SEE REFLECTED CEILING PLAN FOR EXACT LOCATION OF SPRINKLER HEADS. SPRINKLER HEADS DO NOT HAVE TO BE CENTERED IN THE ONE FOOT ACOUSTICAL TILES.

10 COORDINATE WITH FRAMER FOR SHEAR-WALL PENETRATIONS.

11 ALL SPRINKLERS SHALL BE QUICK-RESPONSE TYPE.

12 ALL WET-PIPE SYSTEM COMPONENTS (EXCEPT DRY SPRINKLERS) SHALL BE INSIDE THE BUILDING INSULATION ENVELOPE.

13 ALL REQUIRED DRAINS SHALL FOLLOW NFPA 13 REQUIREMENTS. DRAIN VALVES SHALL BE LOCATED TO PREVENT PUBLIC ACCESS AND SHALL BE PIPED TO DISCHARGE OUTSIDE THE BUILDING.

14 PROVIDE FIRE SPRINKLERS UNDER CANOPIES, STAIRS, AND ROSTRUM ONLY IF REQUIRED BY THE LOCAL FIRE MARSHAL. SPRINKLERS ARE NOT REQUIRED WITHIN CANOPIES THAT ARE FILLED WITH NON-COMBUSTIBLE INSULATION.

SHEET KEYNOTES

1105 DROP DOWN TO MAIN LEVEL PIPING.

1106 DROP DOWN TO SPRINKLER BELOW.

1110 USE VISTAULIC VICFLEX VS1 OR APPROVED EQUAL IN FREEZING LOCATIONS.

1113 SPRINKLERS AT TOP OF ORGAN CHAMBER AND AT MID-POINT OF CHAMBER TYP. OF THREE CHAMBERS. REFER TO ORGAN CHAMBER SECTION SHEET FS301 DETAIL B5.

1114 THIS LINE OF SPRINKLERS ARE UPRIGHT ATTIC SPRINKLERS AT THE TOP OF THE PEAK.

bhd ARCHITECTS
www.bhdarchitects.com
Phone 801.571.0010
Fax 801.571.0303
Toll Free 888.571.0010
65 East Wadsworth Park Drive
Suite 205 Draper, Utah 84020

THE CHURCH OF JESUS CHRIST OF LATTER-DAY SAINTS

Springwater 9
Vineyard UT Springwater Stake

Approx. 542 South Geneva Road
Vineyard, Utah 84059

Owner #: 502-2004
Plan Series: G300-MH-11
County Parcel: 39:228:0001
BHD #: 2346
Date: 15 Aug 2024

Drawing Issue and Revision Schedule

#	Date	Description
1	15 Aug 2024	Bid Documents

MEZZANINE LEVEL FIRE SPRINKLER PLAN

FS102

8/13/2024 10:10:45 AM

FIRE SPRINKLER LEGEND

	UPRIGHT HEAD ON LINE		PRESSURE GAUGE
	CONCEALED PENDENT HEAD	LT	LOW TEMPERATURE SENSOR PROVIDED BY DIVISION 28
	CONCEALED DRY PENDENT HEAD	TS	VALVE TAMPER SWITCH
	SIDE DICHARGE ATTIC HEAD	FS	FLOW SWITCH
	DRY SIDEWALL HEAD RECESSED		FLEXIBLE COUPLING
	DRY SIDEWALL HEAD		SWAY BRACING
	SIDEWALL HEAD RECESSED		ANGLE VALVE
	SIDEWALL HEAD		PIPE SUPPORT
	TYCO MODEL AP ATTIC UPRIGHT HEAD		SPRINKLER PIPING
IT	INSPECTOR'S TEST VALVE		FIRE DEP. CONNECTION
	BALL VALVE 2" & SMALLER BUTTERFLY VALVE 2 1/2" & LARGER		PIPE IN FLOOR STRUCTURE
	PIPE UP / PIPE DOWN		

HEAD COUNT

SPRINKLERS	K-FACTOR	ORIFICE	FINISH	TYPE	CANOPY	DEGREE	QUANTITY
	5.6	1/2"	WHITE	WET PENDENT	CONCEALED	155	
	5.6	1/2"	BRONZE	UPRIGHT	N/A	212	
	5.6	1/2"	WHITE	DRY PENDENT	CONCEALED	155	
	5.6	1/2"	BRONZE	ATTIC SIDEWALL	N/A	212	
	5.6	1/2"	WHITE	DRY SIDEWALL	RECESSED	155	
E				(E=EXTENDED COVERAGE)			
	5.6	1/2"	WHITE	WET SIDEWALL	RECESSED	155	
	5.6	1/2"	BRONZE	WET SIDEWALL	N/A	212	
	5.6	1/2"	BRONZE	DRY SIDEWALL	N/A	212	
	5.6	1/2"	BRONZE	ATTIC AP UPRIGHT		212	

HYDRAULIC DESIGN INFORMATION FOR OFFICE WET SYSTEM

REMOTE AREA = SQUARE FEET

DENSITY = GPM/SQUARE FEET

RISER BASE _____ GPM_____ PSI

HYDRAULIC DESIGN INFORMATION FOR MEZZNAINE WET SYSTEM

REMOTE AREA = SQUARE FEET

DENSITY = GPM/SQUARE FEET

RISER BASE _____ GPM_____ PSI

HYDRAULIC DESIGN INFORMATION FOR ATTIC WET SYSTEM

REMOTE AREA = SQUARE FEET

DENSITY = GPM/SQUARE FEET

RISER BASE _____ GPM_____ PSI

HYDRAULIC DESIGN INFORMATION FOR CHAPEL WET SYSTEM

REMOTE AREA = SQUARE FEET

DENSITY = GPM/SQUARE FEET

RISER BASE _____ GPM_____ PSI

WATER FLOW TEST (1)

TEST DATE: _____ TEST TIME: _____

STATIC: _____ RESIDUAL: _____

FLOW: _____ LOCATION: _____

TEST BY: _____

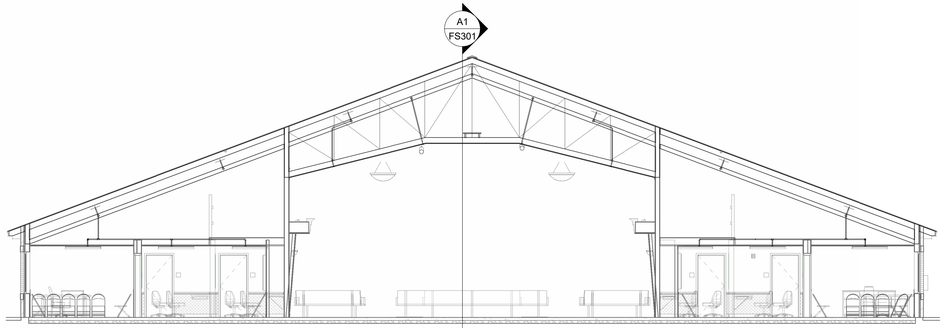

CHAPEL SECTION 2 — C4 FS301
1/8" = 1'-0"

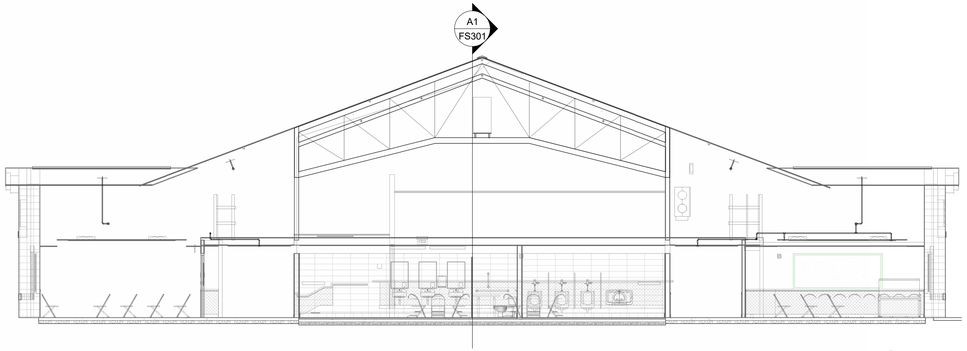

CHAPEL SECTION 3 — B4 FS301
1/8" = 1'-0"

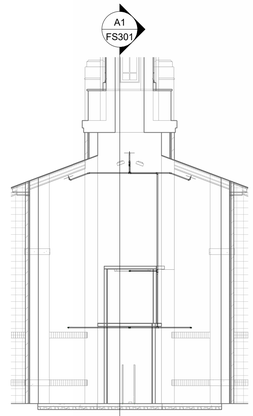

ORGAN CHAMBER SECTION 1 — B5 FS301
1/8" = 1'-0"

OVERALL BUILDING SECTION — A1 FS301
1/8" = 1'-0"

8/13/2024 10:10:57 AM

bhd ARCHITECTS
www.bhdarchitects.com
Phone 801.571.0010
Fax 801.571.0303
Toll Free 888.571.0010
65 East Wadsworth Park Drive
Suite 205 Draper, Utah 84020

THE CHURCH OF JESUS CHRIST OF LATTER-DAY SAINTS

Springwater 9
Vineyard UT Springwater Stake

Approx. 542 South Geneva Road
Vineyard, Utah 84059

BHD #: 2346
County Parcel: 39-228:0001
Plan Series: C300-MH-11
Owner #: 502-2004
Date: 15 Aug 2024

Drawing Issue and Revision Schedule

#	Date	Description
1	15 Aug 2024	Bid Documents

FIRE SPRINKLER SECTIONS

FS301

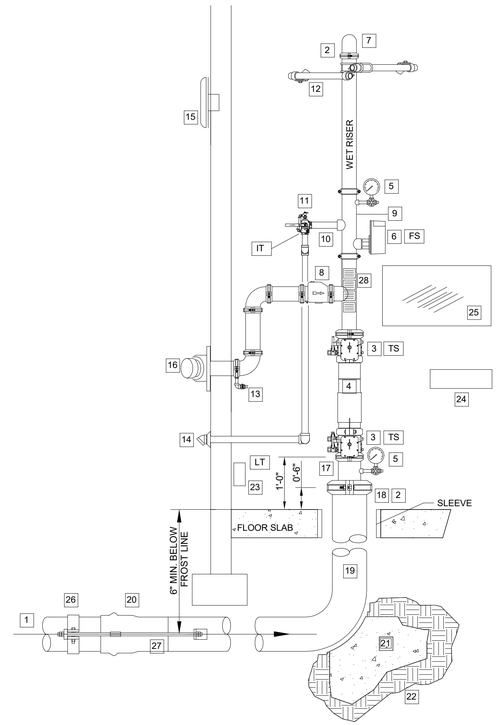

WET RISER DETAIL KEYED NOTES:

1. WATER SUPPLY FROM CITY WATER MAIN. SEE SITE UTILITY PLAN FOR CONTINUATION.
2. FLEXIBLE GROOVED PIPE COUPLING WHEN SEISMIC BRACING IS REQUIRED. SEE NOTE #12.
3. GROOVED BUTTERFLY VALVE WITH INTEGRAL SUPERVISORY SWITCH
4. DOUBLE CHECK BACKFLOW PREVENTER WITH RELATED TRIM AND GAUGES
5. 31/2" DIAMETER WATER GAUGE WITH 1/4" TEST AND ISOLATION VALVE.
6. VANE TYPE WATER FLOW SWITCH
7. SUPPLY TO WET PIPE FIRE SPRINKLER SYSTEM
8. SWING CHECK VALVE
9. RISER MANIFOLD - INCLUDES PRESURE GAUGE, FLOW SWITCH, PRESSURE RELIEF VALVE, AND TEST AND MAIN DRAIN DEVICE.
10. INSPECTOR'S TEST & DRAIN VALVE - PIPE TO OUTSIDE.
11. PRESSURE RELIEF VALVE - REQUIRED - SET AT 175 PSI.
12. SEISMIC BRACING REQUIRED IN SEISMIC DESIGN CATEGORY C, D, E, F. SEE DESIGN CRITERIA SCHEDULE ON SHEET S601.
13. 1/2" AUTOMATIC BALL DRIP VALVE
14. DRAIN PIPING TO OUTSIDE WITH GALVANIZED PIPE, 45 ELL, AND 1-PCE GALV. COLLAR.
15. WEATHERPROOF VOICE ALARM/STROBE (OUTSIDE)
16. OUT TO FIRE DEPARTMENT CONNECTION WITH GALVANIZED SCH 40 PIPING- PROVIDE BALL DRIP WHEN TRAPPING PIPE. SIZE CONNECTION AS REQUIRED.
    16.1. NOTE: PIPE FDC TO REMOTE LOCATION WHEN REQUIRED BY FIRE MARSHAL.
17. GALVANIZED SPOOL PIECE WITH PRESSURE GAUGE.
18. REDUCING GROOVED COUPLING OR CONCENTRIC GROOVED REDUCER.
19. AMES STAINLESS STEEL "IN-BUILDING-RISER" ,NO SUBSTITUTIONS, MINIMUM 6 INCH.
20. TYTON JOINT PIPE CONNECTION WITH GASKET.
21. CONCRETE THRUST BLOCK WITH 8 SQ. FEET HORIZONTAL BEARING AREA (MIN).
22. UNDISTURBED EARTH
23. LOW TEMPERATURE SENSOR - MOUNTED ON WALL - THIS SENSOR IS PROVIDED UNDER DIVISION 28 OF THE SPECIFICATIONS.
24. SPARE HEAD CABINET WITH SPARE SPRINKLER HEADS AND WRENCHES.
25. LAMINATED SYSTEM MAP WITH SYSTEM START-UP AND SHUT-DOWN INSTRUCTIONS.
26. GALVANIZED STEEL PIPE RETAINER CLAMP.
27. GALVANIZED STEEL RODS, SIZE PER NFPA 24, TO INCLUDE WASHERS, ROD COUPLINGS, AND ALL-THREAD RODS WITH DOUBLE HEX NUTS.
28. HYDRAULIC CALCULATION PLACARDS

GENERAL NOTES:

1. PROVIDE SLEEVES WHERE PIPING PENETRATES BUILDING AT FLOOR AND WALLS. SEAL AROUND PENETRATION WITH FLEXIBLE MASTIC AT FLOOR. PROVIDE 2" ANNULAR SPACE AROUND PIPE.
2. ALL BURIED STEEL COMPONENTS SHALL BE PROTECTED FROM CORROSION BY THE TAR AND WRAPPED METHOD. GALVANIZED COMPONENTS ARE NOT EXEMPT FROM THIS REQUIREMENT.

RISER SCHEMATIC (W BFP - NO PRV)

1" = 1'-0"

03
FS501A

bhd ARCHITECTS
www.bhdarchitects.com
Phone 801.571.0010
Fax 801.571.0303
Toll Free 888.571.0010
65 East Wadsworth Park Drive
Suite 205 Draper, Utah 84020

THE CHURCH OF JESUS CHRIST OF LATTER-DAY SAINTS

Springwater 9
Vineyard UT Springwater Stake

Approx. 542 South Geneva Road
Vineyard, Utah 84059

Date: 15 Aug 2024
BHD #: 2346
County Parcel: 39:228:0001
Plan Series: G300-MH-11
Owner #: 502-2004

Drawing Issue and Revision Schedule

#	Date	Description
1	15 Aug 2024	Bid Documents

FIRE SPRINKLER RISERS

FS501A

8/13/2024 10:10:59 AM

20

16

12

08

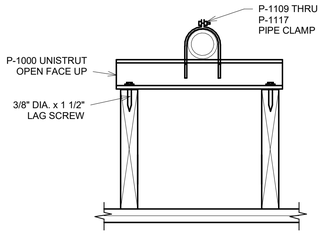

HANGER DETAIL
1 1/2" = 1'-0"

04 FS501B

19

15

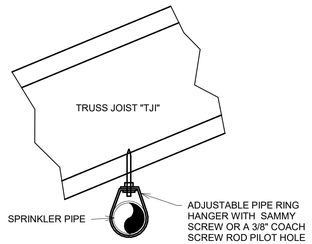

HANGER DETAIL
1 1/2" = 1'-0"

11 FS501B

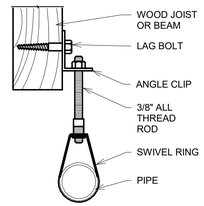

HANGER DETAIL
1 1/2" = 1'-0"

07 FS501B

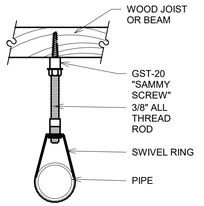

HANGER DETAIL
1 1/2" = 1'-0"

03 FS501B

18

14

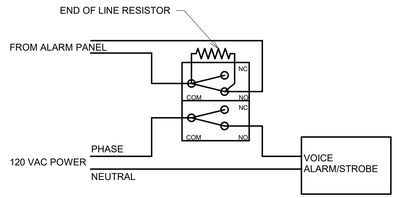

WIRING SCHEMATIC
1 1/2" = 1'-0"

10 FS501B

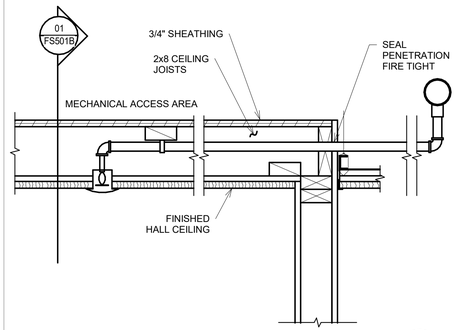

SECTION
1 1/2" = 1'-0"

06 FS501B

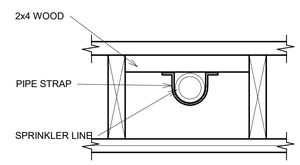

SECTION
1 1/2" = 1'-0"

02 FS501B

17

13

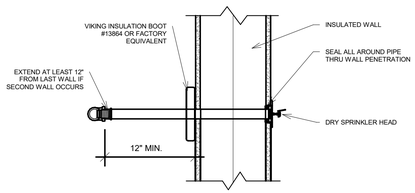

DRY HEAD DETAIL
1 1/2" = 1'-0"

09 FS501B

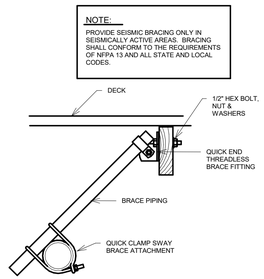

LATERAL SEISMIC BRACE
1 1/2" = 1'-0"

05 FS501B

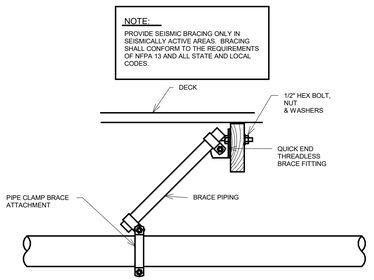

LONGITUDINAL SEISMIC BRACE
1 1/2" = 1'-0"

01 FS501B

bhd ARCHITECTS
www.bhdarchitects.com
Phone 801.571.0010
Fax 801.571.0303
Toll Free 888.571.0010
65 East Wadsworth Park Drive
Suite 205 Draper, Utah 84020

THE CHURCH OF
JESUS CHRIST
OF LATTER-DAY SAINTS

Springwater 9
Vineyard UT Springwater Stake

Approx. 542 South Geneva Road
Vineyard, Utah 84059

Owner #: 502-2004
Plan Series: G300-MH-11
County Parcel: 39-228:0001
BHD #: 2346
Date: 15 Aug 2024

Drawing Issue and Revision Schedule

#	Date	Description
1	15 Aug 2024	Bid Documents

FIRE SPRINKLER DETAILS

FS501B

8/13/2024 10:10:58 AM

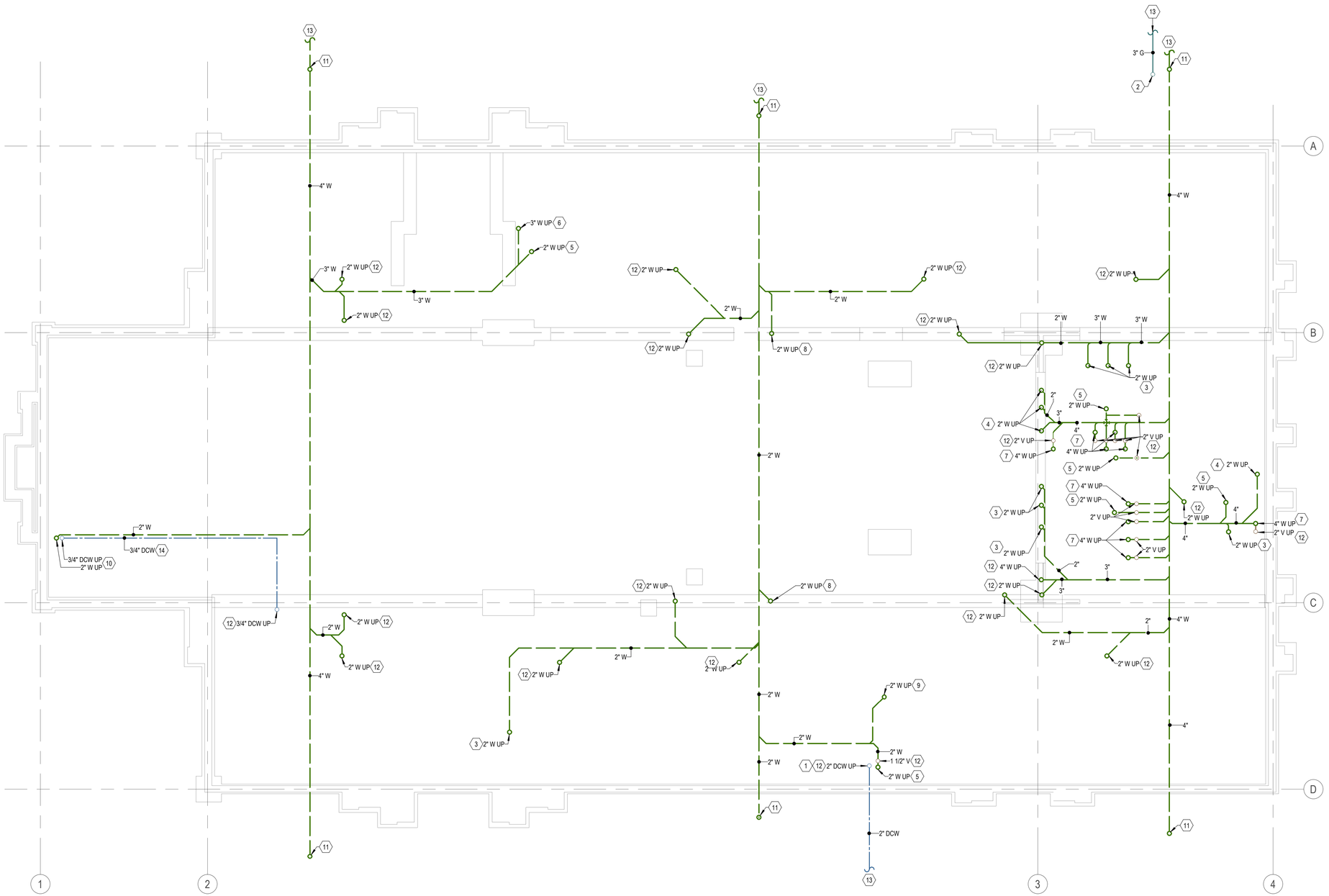

1 BELOW-GRADE PLUMBING PLAN
SCALE: 1/8" = 1'-0"

GENERAL NOTES

1. ALL PLUMBING SHALL COMPLY WITH THE MOST STRINGENT OF APPLICABLE CODES, ORDINANCES, OR THE SPECIFICATIONS.
2. ALL FIXTURES SHALL BE PROPERLY VENTED TO THE ATMOSPHERE.
3. REFER TO MECHANICAL SHEETS FOR LOCATIONS OF MECHANICAL EQUIPMENT AND DUCTWORK AND CORRELATE ALL WORK TO FIT AVAILABLE SPACE.
4. GAS LINE TO BE RUN IN MECHANICAL EQUIPMENT ACCESS AREA UNLESS OTHERWISE NOTED OR SHOWN.
5. WATER PIPING AND VENT PIPING SHALL BE RUN IN MECHANICAL EQUIPMENT ACCESS AREA UNLESS OTHERWISE NOTED OR SHOWN.
6. FOR INDIVIDUAL LINE SIZES TO FIXTURES SEE PLUMBING FIXTURE SCHEDULE SHEET P601.
7. DO NOT RUN PLUMBING IN SHEAR WALLS UNLESS NOTED OTHERWISE.
8. MINIMUM WATER PIPING UNDER CONCRETE SLAB SHALL BE 3/4".
9. DUE TO THE CLOSE PROXIMITY OF THE WATER, VENT AND DRAIN PIPING AS WELL AS DUCTWORK, EQUIPMENT, AND HVAC PIPING, THE PLUMBING CONTRACTOR SHALL COORDINATE THE INSTALLATION WITH THE MECHANICAL AND SHEET METAL CONTRACTORS.
10. FOR PIPE SIZES NOT SHOWN ON THIS SHEET, SEE LARGE SCALE PLANS AND PIPING SCHEMATICS SHEET P401 AND P601.
11. REFER TO MECHANICAL SHEETS FOR ANY ADDITIONAL WORK.
12. COORDINATE LOCATION OF EACH DOMESTIC WATER ISOLATION VALVE WITH MECHANICAL AND SHEET METAL INSTALLATION TO PROVIDE REQUIRED ACCESS AND VISIBILITY TO VALVE.

(#) KEYED NOTES

1 2" DCW UP TO WATER PRESSURE REDUCING STATION. REFER TO DETAIL B/P501.
2 3" GAS MAIN RISES TO PRESSURE REGULATOR AND GAS METER. SEE SHEET P101 FOR CONTINUATION.
3 2" WASTE UP TO LAVATORY.
4 2" WASTE UP TO URINAL.
5 2" WASTE UP TO FLOOR DRAIN.
6 3" WASTE UP TO SERVICE SINK.
7 4" WASTE UP TO WATER CLOSET.
8 2" WASTE UP TO DRINKING FOUNTAIN.
9 2" WASTE UP TO SINK.
10 3/4" DCW AND 2" WASTE UP TO SACRAMENT SINK.
11 PIPE RISES UP TO CLEANOUT AT GRADE.
12 PIPE RISES TO LEVEL ABOVE. SEE SHEET P101 FOR CONTINUATION.
13 SEE SITE UTILITY PLAN FOR CONTINUATION.
14 ROUTE PIPING AT LEAST 3' BELOW GRADE TO BE BELOW FROST DEPTH.

LEGEND

MEANING	SYMBOL OR ABBREVIATION	MEANING	SYMBOL OR ABBREVIATION	MEANING	SYMBOL OR ABBREVIATION
HOT WATER LINE		CONDENSATE DRAIN	D	WALL CLEANOUT	WCO
HOT WATER CIRCULATION LINE		SECONDARY CONDENSATE DRAIN	SD	CLEANOUT TO GRADE	COTG
COLD WATER LINE		UNION		VENT THRU ROOF	VTR
VENT LINE		BALL VALVE		CIRCULATING PUMP OCCUPANCY SENSOR	
WASTE LINE		GAS LINE	G		

bhd ARCHITECTS
www.bhdarchitects.com
Phone 801.571.0010
Fax 801.571.0303
Toll Free 888.571.0010
65 East Wadsworth Park Drive
Suite 205 Draper, Utah 84020

THE CHURCH OF JESUS CHRIST OF LATTER-DAY SAINTS

Springwater 9
Vineyard UT Springwater Stake

Approx. 542 South Geneva Road
Vineyard, Utah 84059

Owner #: 502-2004
Plan Series: G300-MH-11
County Parcel: 39-228-0001
BHD #: 2346
Date: 15 Aug 2024

Drawing Issue and Revision Schedule

#	Date	Description

LICENSED PROFESSIONAL ENGINEER
DAVID L. HANSEN
Aug 15, 2024
STATE OF UTAH

Engineered Systems Associates
1355 EAST CENTER
POCATELLO, IDAHO 83201
PHONE: (208) 233-0501
FAX: (208) 233-0529
EMAIL: esa@engsystems.com
ESA JOB NUMBER: 24066

BELOW-GRADE PLUMBING PLAN

P100

8/14/2024 5:25:00 PM

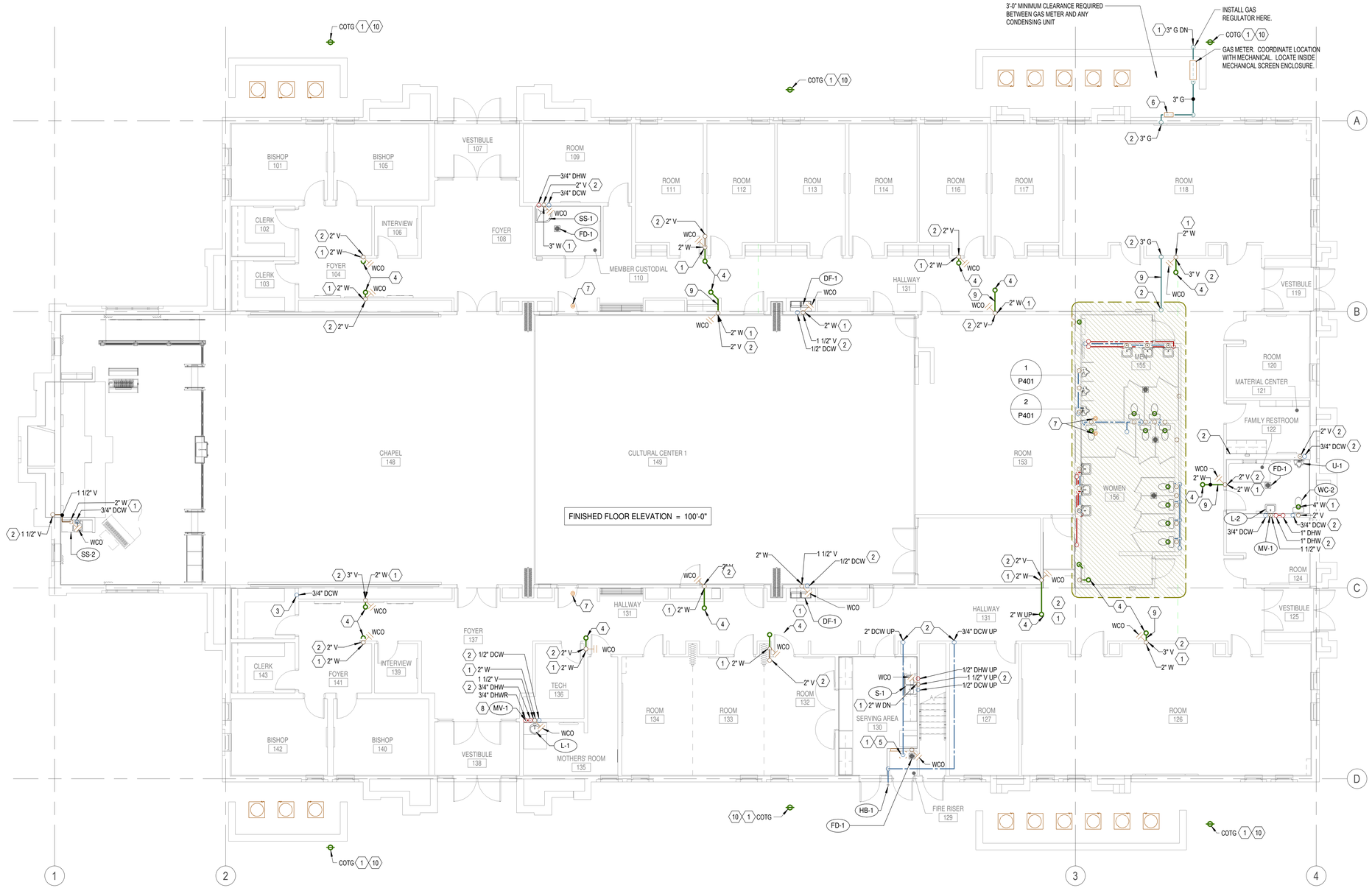

GENERAL NOTES

1. ALL PLUMBING SHALL COMPLY WITH THE MOST STRINGENT OF APPLICABLE CODES, ORDINANCES, OR THE SPECIFICATIONS.
2. ALL FIXTURES SHALL BE PROPERLY VENTED TO THE ATMOSPHERE.
3. REFER TO MECHANICAL SHEETS FOR LOCATIONS OF MECHANICAL EQUIPMENT AND DUCTWORK AND CORRELATE ALL WORK TO FIT AVAILABLE SPACE.
4. GAS LINE TO BE RUN IN MECHANICAL EQUIPMENT ACCESS AREA UNLESS OTHERWISE NOTED OR SHOWN.
5. WATER PIPING AND VENT PIPING SHALL BE RUN IN MECHANICAL EQUIPMENT ACCESS AREA UNLESS OTHERWISE NOTED OR SHOWN.
6. FOR INDIVIDUAL LINE SIZES TO FIXTURES SEE PLUMBING FIXTURE SCHEDULE SHEET P601.
7. DO NOT RUN PLUMBING IN SHEAR WALLS UNLESS NOTED OTHERWISE.
8. MINIMUM WATER PIPING UNDER CONCRETE SLAB SHALL BE 3/4".
9. DUE TO THE CLOSE PROXIMITY OF THE WATER, VENT AND DRAIN PIPING AS WELL AS DUCTWORK, EQUIPMENT, AND HVAC PIPING, THE PLUMBING CONTRACTOR SHALL COORDINATE THE INSTALLATION WITH THE MECHANICAL AND SHEET METAL CONTRACTORS.
10. FOR PIPE SIZES NOT SHOWN ON THIS SHEET, SEE LARGE SCALE PLANS AND PIPING SCHEMATICS SHEET P401 AND P601.
11. REFER TO MECHANICAL SHEETS FOR ANY ADDITIONAL WORK.
12. COORDINATE LOCATION OF EACH DOMESTIC WATER ISOLATION VALVE WITH MECHANICAL AND SHEET METAL INSTALLATION TO PROVIDE REQUIRED ACCESS AND VISIBILITY TO VALVE.
13. COORDINATE EXACT LOCATION OF HW CIRCULATION PUMP OCCUPANCY SENSORS WITH ARCHITECT. LOCATE ON CEILING AWAY FROM LIGHTS, DIFFUSERS, AND FIRE SPRINKLER HEADS. COORDINATE INSTALLATION OF J-BOX AND CONDUIT WITH DIV. 26.

KEYED NOTES

#	KEYED NOTES
1	PIPE DROPS DOWN BELOW-GRADE. REFER TO SHEET P100 FOR CONTINUATION.
2	PIPE RISES UP TO THE EQUIPMENT PLATFORM. REFER TO SHEET P102 FOR CONTINUATION.
3	PIPE DROPS DOWN BELOW-GRADE AND RISES UP TO THE EQUIPMENT PLATFORM. REFER TO SHEETS P100 AND P102 FOR CONTINUATION.
4	2" WASTE UP TO CONDENSATE RECEIVER, CR. SEE DETAIL H/P501. COORDINATE WITH MECHANICAL DUCTWORK AND EQUIPMENT. REFER TO SHEET P102 FOR CONTINUATION.
5	WATER PRESSURE REDUCING STATION. REFER TO DETAIL B/P501.
6	REFER TO DETAIL A/P501.
7	HW CIRCULATION PUMP HARDWIRED OCCUPANCY SENSOR LOCATION. SEE GENERAL NOTE #13.
8	THERMOSTATIC MIXING VALVE INSIDE WALL WITH LOCKING ACCESS DOOR. COORDINATE LOCATION WITH ARCHITECTURAL.
9	PIPING RUN HORIZONTALLY IN FLOOR/CEILING JOISTS, TYPICAL.
10	REFER TO DETAIL E/P501.

bhd ARCHITECTS
www.bhdarchitects.com
Phone 801.571.0010
Fax 801.571.0303
Toll Free 888.571.0010
65 East Wadsworth Park Drive
Suite 205 Draper, Utah 84020

THE CHURCH OF JESUS CHRIST OF LATTER-DAY SAINTS

Springwater 9
Vineyard UT Springwater Stake

Approx. 542 South Geneva Road
Vineyard, Utah 84059

BHD #: 2346
County Parcel: 39-228-0001
Plan Series: C300-MH-11
Owner #: 502-2004
Date: 15 Aug 2024

Drawing Issue and Revision Schedule

#	Date	Description

MAIN FLOOR PLUMBING PLAN

P101

DAVID L. HANSEN
REGISTERED PROFESSIONAL ENGINEER
STATE OF UTAH
Aug 15, 2024

Engineered Systems Associates
1355 EAST CENTER
POCATELLO, IDAHO 83201
PHONE: (208) 233-0501
FAX: (208) 233-0529
EMAIL: esa@engsystems.com
ESA JOB NUMBER: 24066

8/14/2024 5:25:03 PM

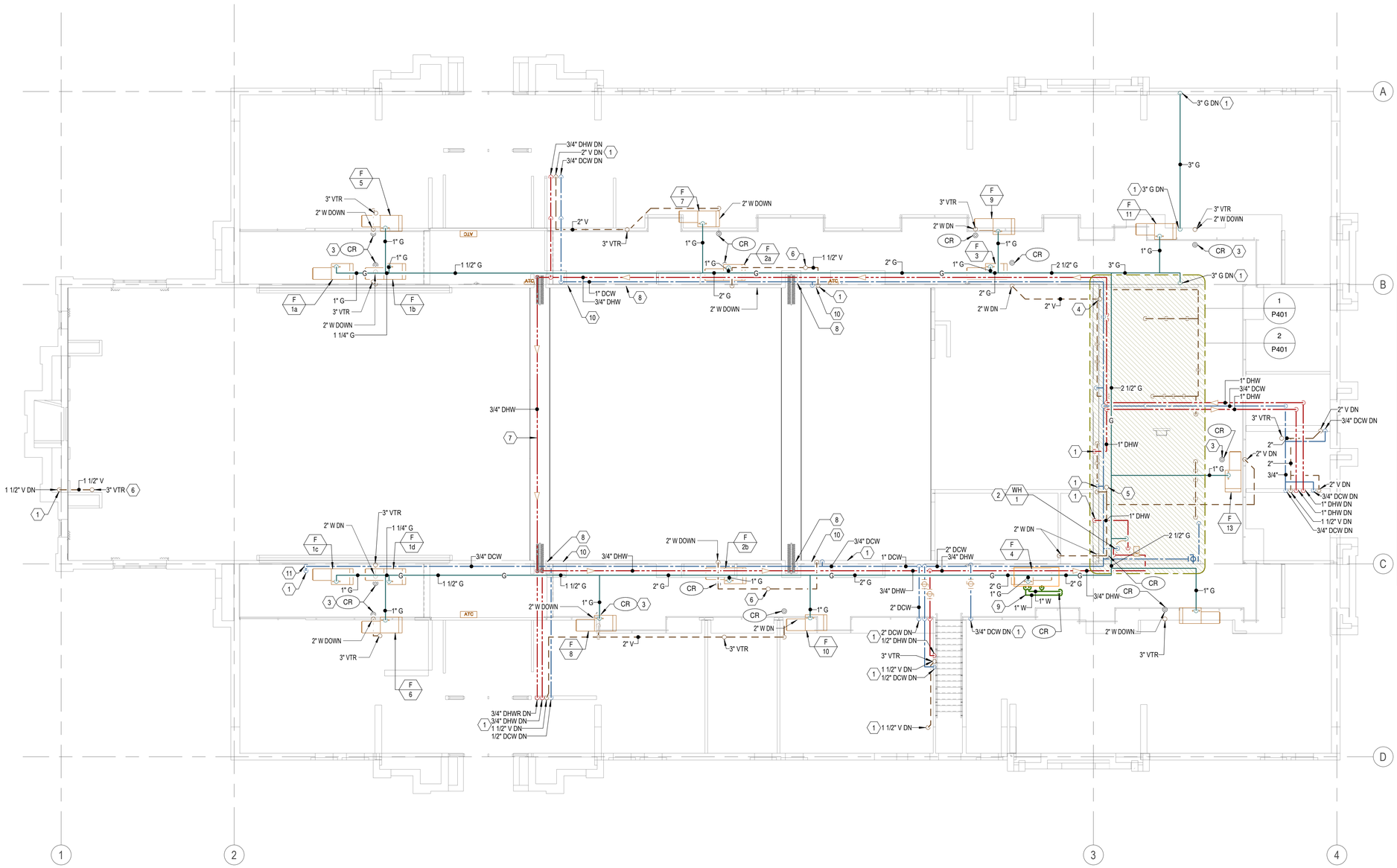

1 EQUIPMENT PLATFORM PLUMBING PLAN

SCALE: 1/8" = 1'-0"

GENERAL NOTES

1. LEAVE 6" CLEAR SPACE ON EQUIPMENT DECK BETWEEN FAN UNITS, DUCTWORK, ETC. AND HIGH WALL FOR GAS PIPING, CONDUIT, DRAINS, ETC. RACK ALL PIPING AND CONDUIT ON WALL WITH UNISTRUT.
2. REFER TO MECHANICAL SHEETS FOR LOCATIONS OF MECHANICAL EQUIPMENT AND DUCTWORK. COORDINATE ALL WORK TO FIT AVAILABLE SPACE.
3. DO NOT BLOCK ACCESS WALKWAY WITH PIPING, DUCT, CONDUIT, ETC. WHEN CROSSING WALKWAY RUN HIGH OVERHEAD. NO PIPING, DUCTWORK, CONDUIT, ETC. SHALL BE RUN LOWER THAN DUCTWORK SHOWN IN SECTIONS ON SHEET M301.
4. DUE TO THE CLOSE PROXIMITY OF THE WATER, VENT, DRAIN PIPING, AND DUCTWORK, THE PLUMBING CONTRACTOR SHALL COORDINATE THE INSTALLATION OF ALL PLUMBING WITH THE MECHANICAL AND SHEET METAL CONTRACTORS.
5. TYPICAL FOR ALL FAN UNITS AND COOLING COILS. DO NOT OBSTRUCT WALKWAY. SHOWN HERE FOR CLARITY ONLY. REFER TO DETAIL D/M503, COMBINE PRIMARY DRAINS OF EACH FAN UNIT AND COOLING COIL TO A 1" PIPE SIZE. SEE DETAIL B/P502 FOR PIPE SUPPORT.

KEYED NOTES

#	
1	REFER TO SHEET P101 FOR CONTINUATION.
2	REFER TO DETAIL F/P501.
3	REFER TO DETAIL H/P501, TYPICAL.
4	3" VTR.
5	4" VTR.
6	VENT LINE UP TO 3" VTR.
7	CONTRACTOR SHALL RUN ALL WATER LINES WITHIN BUILDING INSULATION ENVELOPE.
8	PIPING IS SHOWN HORIZONTALLY MOUNTED FOR CLARITY. PIPING SHALL BE STACKED ON THE WALL.
9	FAN UNIT DRAIN PAN WITH SD (SECONDARY DRAIN) AND D (DRAIN) LINES RUN TO NEAREST CR-1. SEE GENERAL NOTE #5. REFER TO DETAIL D/M503. TYPICAL FOR ALL FAN UNITS.
10	ROUTE PIPING AS NEEDED TO GO AROUND CURTAIN WALL CAVITIES.
11	PROVIDE SACRAMENT SINK SHUT-OFF VALVE IN VERTICAL PIPE AT THIS LOCATION. COORDINATE VALVE LOCATION WITH OTHER DISCIPLINES TO MAINTAIN ACCESSIBILITY.

bhd ARCHITECTS
www.bhdarchitects.com
Phone 801.571.0010
Fax 801.571.0303
Toll Free 888.571.0010
65 East Wadsworth Park Drive
Suite 205 Draper, Utah 84020

THE CHURCH OF JESUS CHRIST OF LATTER-DAY SAINTS

Springwater 9
Vineyard UT Springwater Stake

Approx. 542 South Geneva Road
Vineyard, Utah 84059

BHD #: 2346
County Parcel: 39-228:0001
Plan Series: G300-MH-11
Owner #: 502-2004
Date: 15 Aug 2024

Drawing Issue and Revision Schedule

#	Date	Description

EQUIPMENT PLATFORM PLUMBING PLAN

P102

REGISTERED PROFESSIONAL ENGINEER
DAVID L. HANSEN
Aug 15, 2024
STATE OF UTAH

Engineered Systems Associates
1355 EAST CENTER
POCATELLO, IDAHO 83201
PHONE: (208) 233-0501
FAX: (208) 233-0529
EMAIL: esa@engsystems.com

ESA JOB NUMBER: 24066

8/14/2024 5:25:06 PM

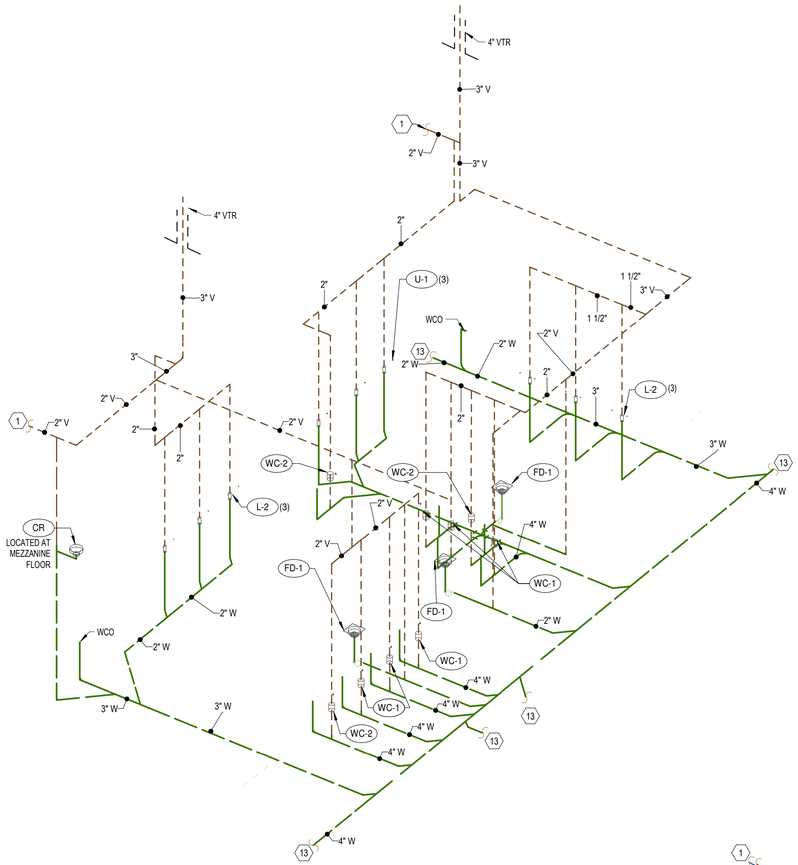

3 PLUMBING WASTE AND VENT SCHEMATIC
SCALE:

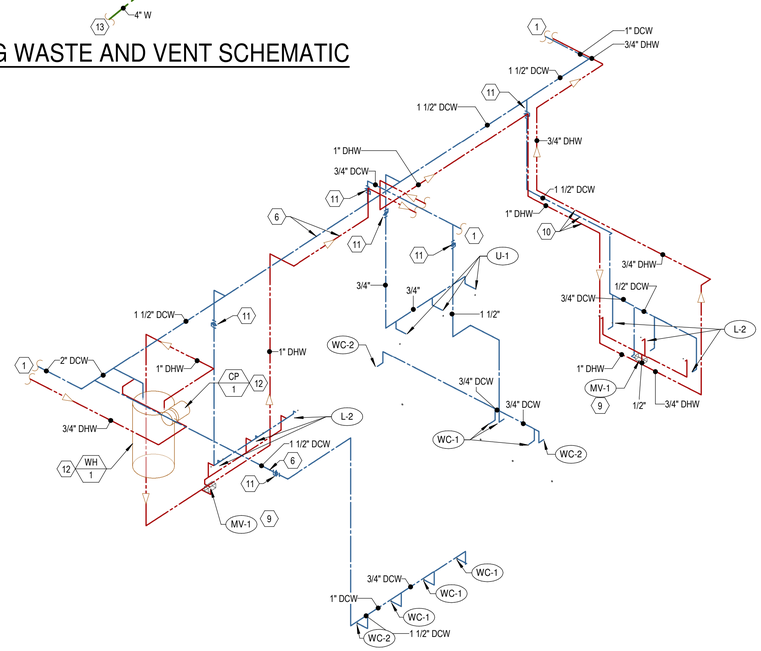

4 PLUMBING WATER SUPPLY SCHEMATIC
SCALE:

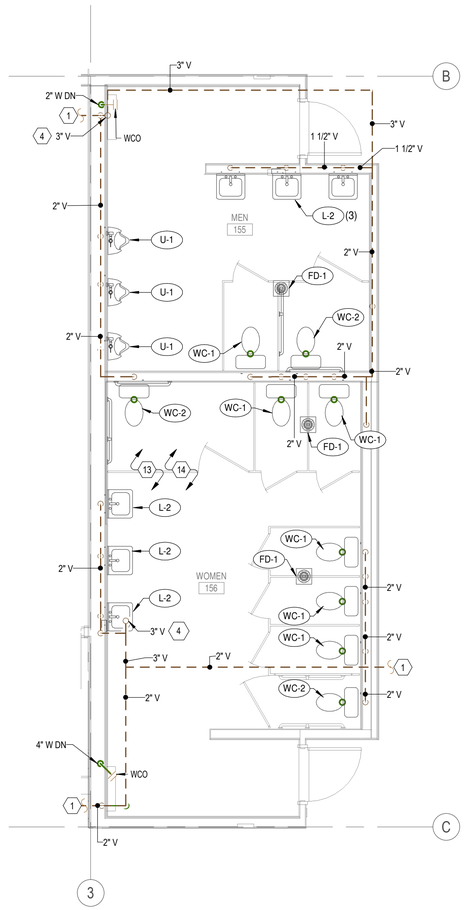

2 LARGE SCALE WASTE AND VENT PIPING PLAN
SCALE: 1/4" = 1'-0"

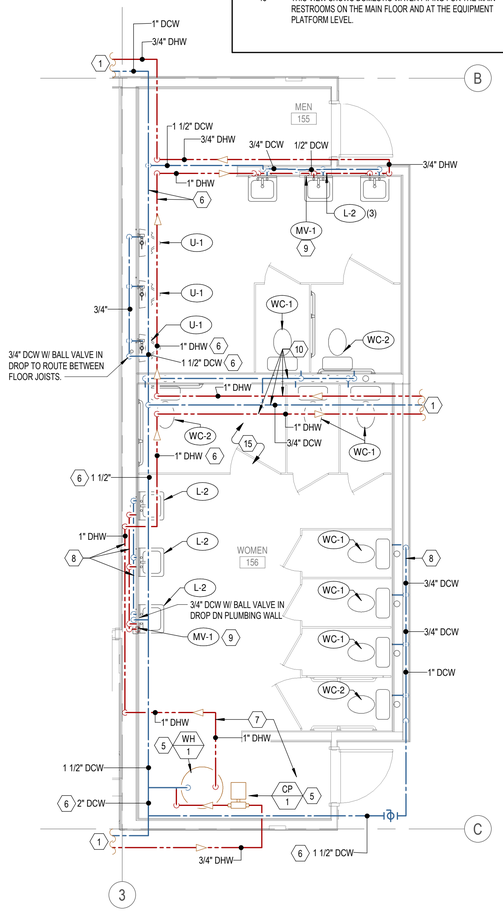

1 LARGE SCALE DOMESTIC WATER PIPING PLAN
SCALE: 1/4" = 1'-0"

KEYED NOTES

#	
1	REFER TO SHEET P102 FOR CONTINUATION.
4	4" VTR.
5	WATER HEATER AND CIRCULATOR PUMP LOCATED AT MEZZANINE LEVEL SHOWN FOR CLARITY.
6	WATER PIPING LOCATED ON WALL AT MEZZANINE LEVEL SHOWN HORIZONTALLY FOR CLARITY.
7	WATER PIPING LOCATED AT MEZZANINE LEVEL SHOWN FOR CLARITY.
8	WATER PIPING LOCATED IN PLUMBING WALL AT FIXTURE LEVEL.
9	THERMOSTATIC MIXING VALVE INSIDE WALL WITH LOCKING ACCESS DOOR. COORDINATE LOCATION WITH ARCHITECTURAL.
10	PIPING RUN HORIZONTALLY IN FLOOR/CEILING JOISTS.
11	BRANCH SHUT-OFF VALVE. SEE GENERAL NOTE #12 ON SHEET P101.
12	REFER TO DETAIL F/P501.
13	FOR BELOW-GRADE PIPING, REFER TO SHEET P100.
14	THIS VIEW INCLUDES DWV PIPING FOR THE MAIN RESTROOMS ABOVE GRADE.
15	THIS VIEW SHOWS DOMESTIC WATER PIPING FOR THE MAIN RESTROOMS ON THE MAIN FLOOR AND AT THE EQUIPMENT PLATFORM LEVEL.

bhd ARCHITECTS
www.bhdarchitects.com
Phone 801.571.0010
Fax 801.571.0303
Toll Free 888.571.0010
65 East Wadsworth Park Drive
Suite 205 Draper, Utah 84020

THE CHURCH OF JESUS CHRIST OF LATTER-DAY SAINTS

Springwater 9
Vineyard UT Springwater Stake

Approx. 542 South Geneva Road
Vineyard, Utah 84059

Owner #: 502-2004
Plan Series: G300-MH-11
County Parcel: 39-228:0001
BHD #: 2346
Date: 15 Aug 2024

Drawing Issue and Revision Schedule

#	Date	Description

LARGE SCALE PLUMBING PLANS

Engineered Systems Associates
1355 EAST CENTER
POCATELLO, IDAHO 83201
PHONE: (208) 233-0501
FAX: (208) 233-0529
EMAIL: esa@engsystems.com
ESA JOB NUMBER: 24066

LICENSED PROFESSIONAL ENGINEER
DAVID L. HANSEN
Aug 15, 2024
STATE OF UTAH

P401

8/14/2024 5:25:08 PM

NOTES:
1. VALVE MUST BE INSTALLED WITH THE CHAIN AND RESET BUTTON FACING OUT AND ACCESSIBLE.
2. THE CHAIN IS A PLUMB LINE. MAKE SURE VALVE IS MOUNTED ABSOLUTELY LEVEL AND NO PART OF THE CHAIN IS TOUCHING THE RING.
3. VALVE MUST BE INSTALLED WITH GAS FLOW IN DIRECTION OF "ARROW" CAST INTO VALVE BODY.
4. SEISMIC VALVE TO BE LOCATED WITHIN THE FIRST SIX LINEAL FEET OF PIPE FROM METER.
5. SEISMIC VALVE MUST BE SAME SIZE AS LINE INTO BUILDING. SEISMIC VALVE MUST BE 2" MINIMUM FLANGED.

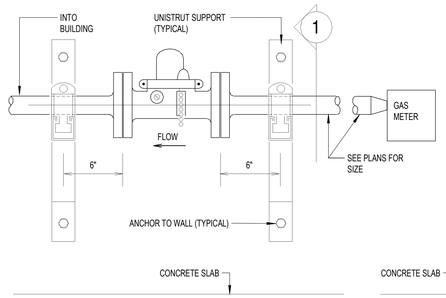

ELEVATION VIEW

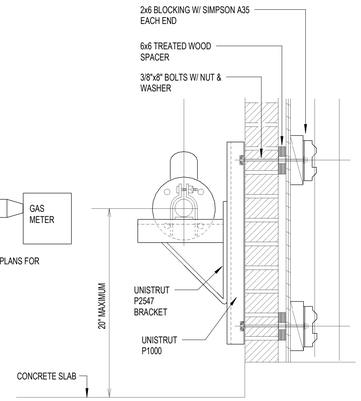

1 SECTION
SCALE: NONE

A SEISMIC VALVE DETAIL
NOT TO SCALE

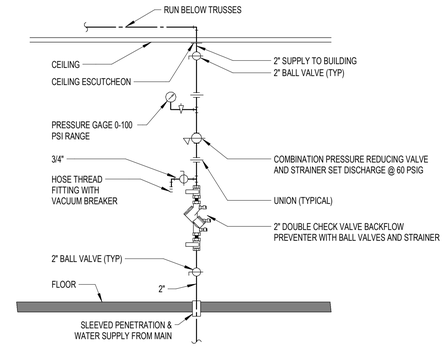

B VERTICAL WATER PRESSURE REDUCING STATION DETAIL
NOT TO SCALE

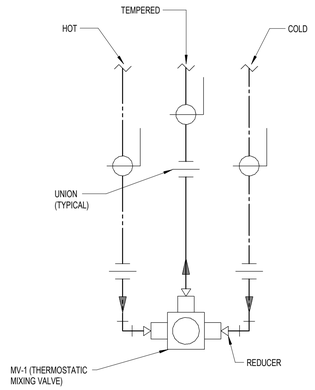

C MIXING VALVE PIPING SCHEME
NOT TO SCALE

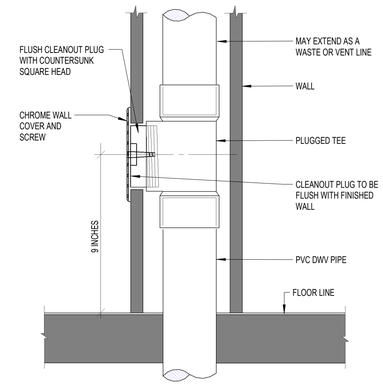

D WALL CLEANOUT DETAIL
NOT TO SCALE

FLOOR CLEANOUT (FCO)
CLEANOUT NOT TO BE LOCATED IN CARPETED AREA

CLEANOUT TO GRADE (COTG) (CONCRETE & GRADE)

E CLEANOUT DETAILS
NOT TO SCALE

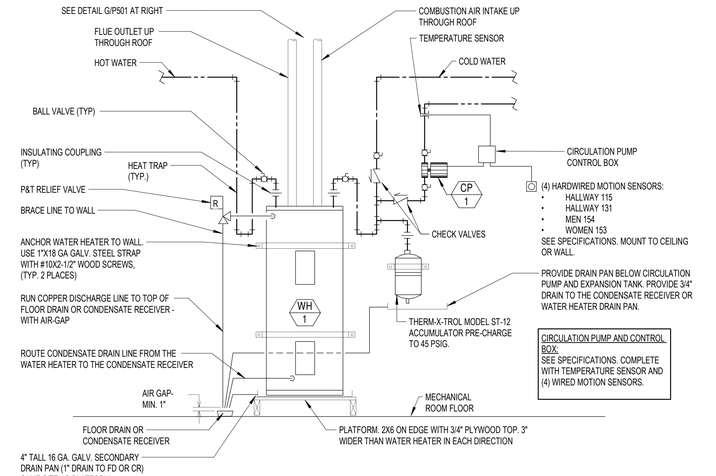

F TANK WATER HEATER PIPING DETAIL
NOT TO SCALE

NOTE:
COORDINATE EXACT FLUE AND COMBUSTION AIR PIPE SIZING AND CONFIGURATION WITH MFG. RECOMMENDATIONS.

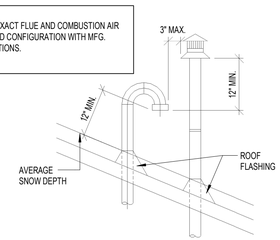

DOUBLE ROOF PENETRATION

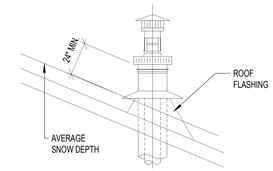

SINGLE ROOF PENETRATION

G WATER HEATER VENTING PENETRATION DETAILS
NOT TO SCALE

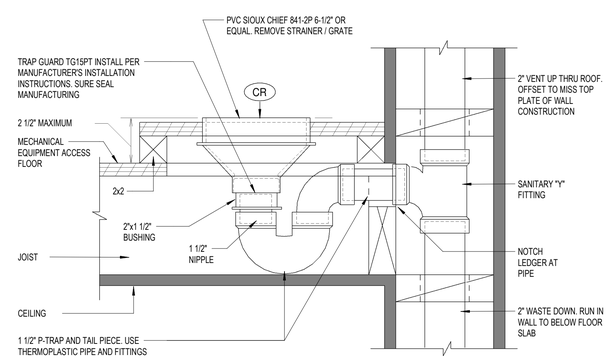

H CONDENSATE RECEIVER DETAIL
NOT TO SCALE

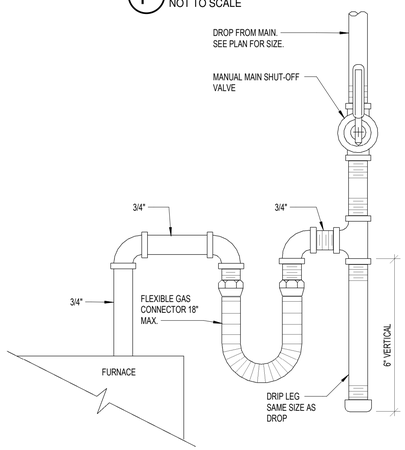

J GAS LINE CONNECTION DETAIL
NOT TO SCALE

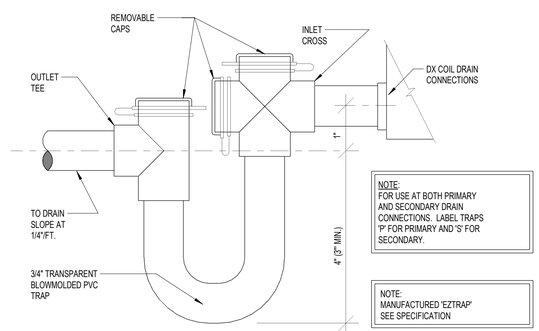

K DX COIL CONDENSATE DRAIN DETAIL
NOT TO SCALE

8/14/2024 5:25:09 PM

bhd ARCHITECTS
www.bhdarchitects.com
Phone 801.571.0010
Fax 801.571.0303
Toll Free 888.571.0010
65 East Wadsworth Park Drive
Suite 205 Draper, Utah 84020

THE CHURCH OF JESUS CHRIST OF LATTER-DAY SAINTS

Springwater 9
Vineyard UT Springwater Stake

Approx. 542 South Geneva Road
Vineyard, Utah 84059

BHD #: 2346
County Parcel: 39-228:0001
Plan Series: G300-MH-11
Owner #: 502-2004
Date: 15 Aug 2024

Drawing Issue and Revision Schedule

#	Date	Description

PLUMBING DETAILS

P501

Engineered Systems Associates
1355 EAST CENTER
POCATELLO, IDAHO 83201
PHONE: (208) 233-0501
FAX: (208) 233-0529
EMAIL: esa@engsystems.com
ESA JOB NUMBER: 24066

LICENSED PROFESSIONAL ENGINEER
DAVID L. HANSEN
Aug 15, 2024
STATE OF UTAH

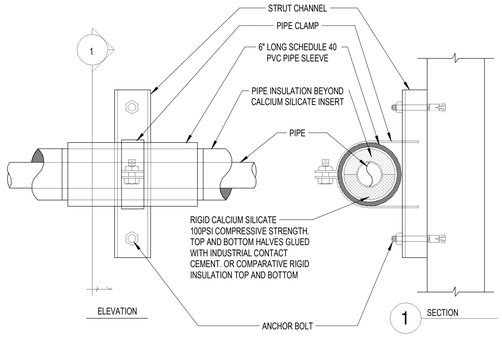

A WALL PIPE SUPPORT DETAIL
NOT TO SCALE

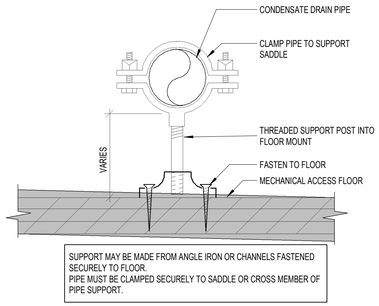

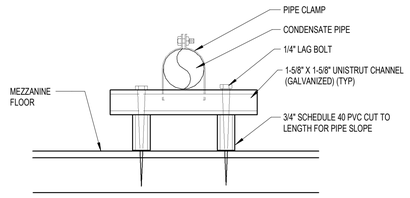

CONDENSATE DRAIN PIPING MAY BE INSTALLED USING EITHER OF THESE TWO SUPPORT METHODS

B CONDENSATE DRAIN PIPE SUPPORT DETAIL
NOT TO SCALE

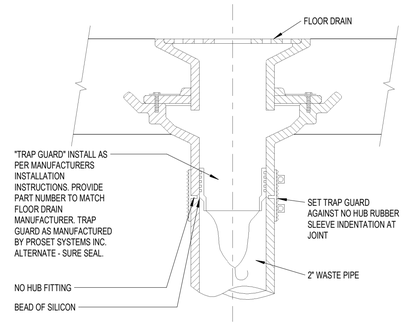

C TRAP GUARD TRAP SEAL DETAIL
NOT TO SCALE

bhd ARCHITECTS
www.bhdarchitects.com
Phone 801.571.0010
Fax 801.571.0303
Toll Free 888.571.0010
65 East Wadsworth Park Drive
Suite 205 Draper, Utah 84020

THE CHURCH OF JESUS CHRIST OF LATTER-DAY SAINTS

Springwater 9
Vineyard UT Springwater Stake

Approx. 542 South Geneva Road
Vineyard, Utah 84059

Date: 15 Aug 2024
BHD #: 2346
County Parcel: 39-228-0001
Plan Series: G300-MH-11
Owner #: 502-2004

Drawing Issue and Revision Schedule

#	Date	Description

PLUMBING DETAILS

P502

Engineered Systems Associates
1355 EAST CENTER
POCATELLO, IDAHO 83201
PHONE: (208) 233-0501
FAX: (208) 233-0529
EMAIL: esa@engsystems.com
ESA JOB NUMBER: 24066

REGISTERED PROFESSIONAL ENGINEER
DAVID L. HANSEN
Aug 15, 2024
STATE OF UTAH

8/14/2024 5:25:10 PM

PLUMBING FIXTURE SCHEDULE

MARK	QUANTITY	FIXTURE	TRAP	WASTE	VENT	C.W.	H.W.	REMARKS
CR	16	CONDENSATE RECEPTOR	1-1/2"	1-1/2"	2"	--	--	SEE DETAIL J/P501, FIELD ASSEMBLED
DF-1	2	DRINKING FOUNTAIN	1-1/2"	1-1/2"	1-1/2"	1/2"	--	ELECTRIC BI-LEVEL (ADA APPROVED)
FD-1	6	FLOOR DRAIN	2"	2"	2"	--	--	WITH DEEP SEAL P-TRAP AND TRAP SEAL. SEE DETAIL C/P502
HB-1	1	WALL HYDRANT	--	--	--	3/4"	--	FREEZE PROOF. 20" MINIMUM LENGTH
L-1	1	LAVATORY	1-1/4"	1-1/4"	1-1/2"	1/2"	1/2"	COUNTER TOP 20"X17", SEE ARCHITECTURAL ELEVATIONS, SEE NOTES 2 & 3
L-2	7	LAVATORY	1-1/4"	1-1/4"	1-1/2"	1/2"	1/2"	SELF SUPPORTING 20"x18", SEE ARCHITECTURAL ELEVATIONS, SEE NOTES 2 & 3
MV-1	4	MIXING VALVE	--	--	--	1/2"	1/2"	FOR LAVATORIES - SEE DETAIL C/P501 - MEETS ASSE 1070. SEE NOTE 4.
S-1	1	SERVING AREA SINK	1-1/2"	1-1/2"	1-1/2"	1/2"	1/2"	TWO COMPARTMENT
SS-1	1	SERVICE SINK	3"	3"	3"	1/2"	1/2"	FLOOR TYPE
SS-2	1	SACRAMENT SINK	1-1/4"	1-1/4"	1-1/4"	1/2"	--	COUNTER TOP
U-1	3	URINAL	INT.	2"	2"	3/4"	--	FLUSH VALVE, WALL HUNG, HEU (HIGH EFFICIENCY URINAL), SEE NOTE 2
WC-1	8	WATER CLOSET	INT.	3"	2"	1/2"	--	FLUSH TANK, HET (HIGH EFFICIENCY TOILET)
WC-2	2	WATER CLOSET	INT.	3"	2"	1/2"	--	FLUSH TANK, 18" RIM HEIGHT (ADA APPROVED), HET
WC-3	1	WATER CLOSET	INT.	4"	2"	1/2"	--	FLUSH TANK, 18" RIM HEIGHT (ADA APPROVED), (1.6 GAL. PER FLUSH)

TAG

1. COLD WATER FIXTURE UNITS ARE 116. WASTE WATER FIXTURE UNITS ARE 146.
2. WHEN MOUNTED PER ARCHITECTURAL ELEVATIONS, ADA ACCESSIBILITY REQUIREMENTS ARE SATISFIED.
3. PROVIDE MIXING VALVE. SEE NOTE #4. ONE VALVE FOR MULTIPLE FIXTURE LOCATIONS.
4. MOUNT INSIDE WALL BELOW LAVATORY, BEHIND LOCKING ACCESS DOOR. COORDINATE LOCATION WITH ARCHITECTURAL. SEE PLUMBING PLANS AND PLUMBING WATER SUPPLY SCHEMATICS ON SHEET P401 FOR MORE DETAILS.

GAS-FIRED WATER HEATER SCHEDULE

MARK	TYPE	INPUT LOAD (BTU/H)	MIN. EFF. (%)	LEAVING WATER TEMP (°F)	TANK SIZE (GAL)	FLUE SIZE (IN)	MAX. WIDTH/ DEPTH/ HEIGHT (IN)	OPERATING WEIGHT (LBS)	V/PH/HZ	REMARKS
WH-1	CONDENSING	100,000	94	130 °F	34-55	4"	30/30/60	450 - 1000	120/1/60	SEE NOTES 1 & 2

1. SEE SPECIFICATIONS. & DETAIL F & G/P501.
2. COMPLETE WITH CIRCULATING PUMP, CP-1. SEE DOMESTIC PUMP SCHEDULE.

DOMESTIC PUMP SCHEDULE

MARK	TYPE	FLUID			ELECTRICAL			REMARKS
		GPM	WORKING FLUID	HEAD PRESSURE (FT)	MOTOR SIZE (HP)	AMPS	V/PH/HZ	
CP-1	VERTICAL INLINE	3.5	WATER	28	0.167	1.8	120/1/60	1,2,3

1. 3-SPEED MOTOR.
2. COMPLETE WITH TEMPERATURE SENSOR, CONTROLLER, AND (4) WIRED MOTION SENSORS.
3. SEE SPECIFICATION SECTION 22 3423 & DETAIL F/P501.

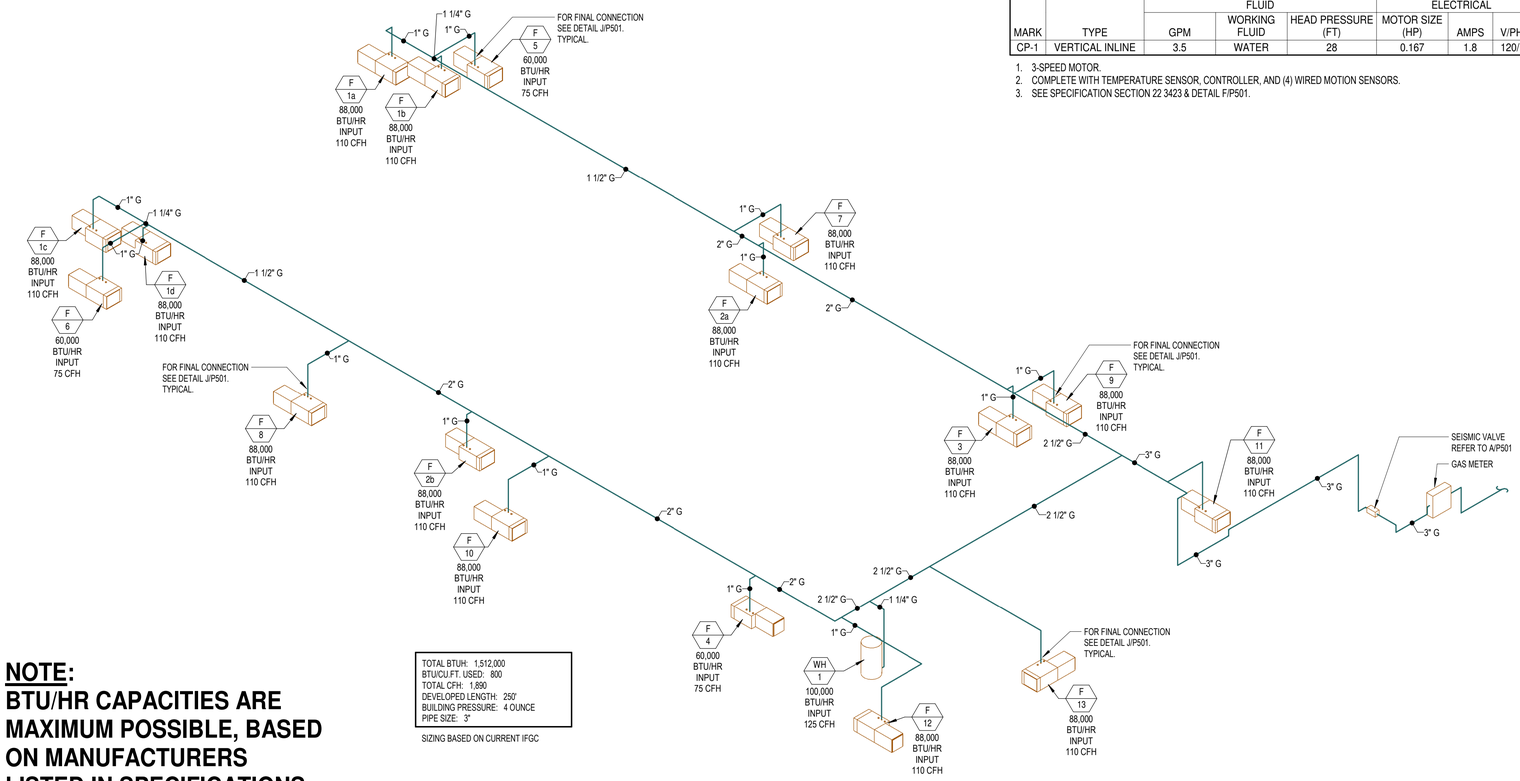

TOTAL BTUH: 1,512,000
BTU/CU.FT. USED: 800
TOTAL CFH: 1,890
DEVELOPED LENGTH: 250'
BUILDING PRESSURE: 4 OUNCE
PIPE SIZE: 3"

SIZING BASED ON CURRENT IFGC

NOTE:
BTU/HR CAPACITIES ARE MAXIMUM POSSIBLE, BASED ON MANUFACTURERS LISTED IN SPECIFICATIONS.

1 GAS PIPING SCHEMATIC
SCALE:

bhd ARCHITECTS
www.bhdarchitects.com
Phone 801.571.0010
Fax 801.571.0303
Toll Free 888.571.0010
65 East Wadsworth Park Drive
Suite 205 Draper, Utah 84020

THE CHURCH OF JESUS CHRIST OF LATTER-DAY SAINTS

Springwater 9
Vineyard UT Springwater Stake

Approx. 542 South Geneva Road
Vineyard, Utah 84059

BHD #: 2346
County Parcel: 39-228:0001
Plan Series: G300-MH-11
Owner #: 502-2004
Date: 15 Aug 2024

Drawing Issue and Revision Schedule

#	Date	Description

PLUMBING SCHEDULES AND GAS PIPING SCHEMATIC

P601

Engineered Systems Associates
1355 EAST CENTER
POCATELLO, IDAHO 83201
PHONE: (208) 233-0501
FAX: (208) 233-0529
EMAIL: esa@engsystems.com
ESA JOB NUMBER: 24066

LICENSED PROFESSIONAL ENGINEER
DAVID L. HANSEN
Aug 15, 2024
STATE OF UTAH

8/14/2024 5:25:11 PM

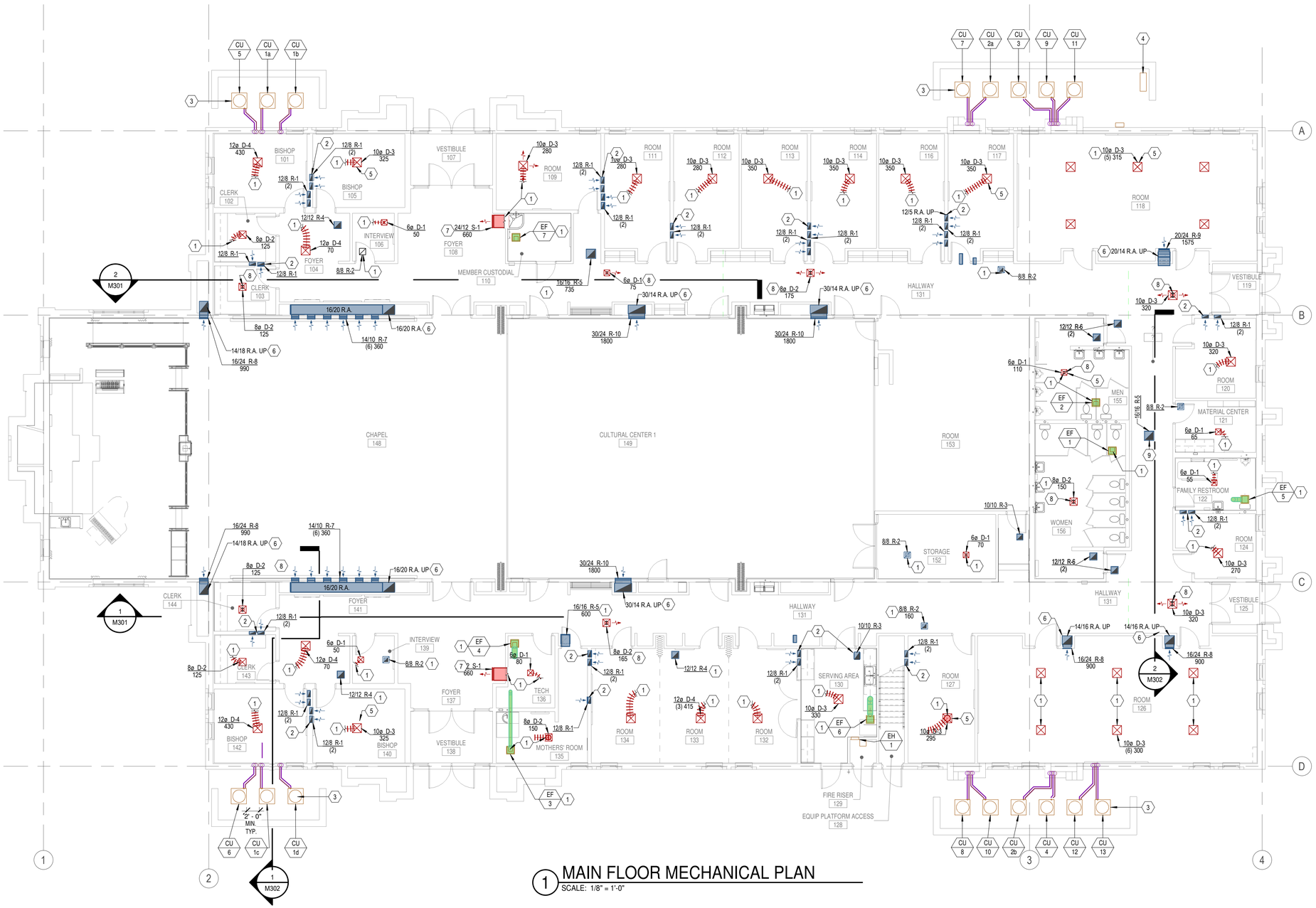

1 MAIN FLOOR MECHANICAL PLAN

SCALE: 1/8" = 1'-0"

GENERAL NOTES

1. DRAWINGS SHOW GENERAL ARRANGEMENT OF PIPING, DUCTWORK, EQUIPMENT, ETC. FOLLOW AS CLOSELY AS ACTUAL BUILDING CONSTRUCTION AND WORK OF OTHER TRADES WILL PERMIT. BECAUSE OF THE SMALL SCALE OF THE DRAWINGS, IT IS NOT POSSIBLE TO INDICATE ALL OFFSETS, FITTINGS, AND ACCESSORIES THAT MAY BE REQUIRED. INVESTIGATE STRUCTURAL AND FINISH CONDITIONS AFFECTING THIS WORK AND ARRANGE WORK ACCORDINGLY. PROVIDE SUCH FITTINGS, VALVES, AND ACCESSORIES REQUIRED TO MEET CONDITIONS.
2. ALL DUCT DIMENSIONS SHOWN ARE CLEAR DIMENSIONS INSIDE DUCT LINER.
3. DO NOT USE LINER INSIDE RETURN AIR DUCT RISERS IN 2"X6" WALLS OF PERIMETER ROOMS.
4. WRAP ALL OUTSIDE AIR DUCTS WITH EXTERNAL INSULATION.
5. SEE ARCHITECTURAL REFLECTED CEILING PLAN FOR EXACT LOCATION OF GRILLES AND DIFFUSERS.
6. ALL PVC EQUIPMENT VENTS, PLUMBING VENTS, AND PENTHOUSE EXHAUST VENTS SHALL BE PAINTED TO MATCH ROOF COLOR.
7. MOUNT ALL DUCT SMOKE DETECTORS IN RETURN AIR STREAM ONLY. DO NOT MOUNT DOWNSTREAM OF MINIMUM OUTSIDE AIR CONNECTION.
8. DO NOT ROUTE PIPES ABOVE ELECTRICAL PANELS. MAINTAIN CLEAR ACCESS SPACE IN FRONT OF ALL ELECTRICAL PANELS 4'-0" DEEP AND 6'-8" HIGH.
9. SEE SHEET M102 FOR CONTINUATION OF ALL DUCT RISERS.
10. COORDINATE WITH NATURAL GAS PIPING MAIN. SEE SHEET P102.

(#) KEYED NOTES

1. REFER TO SHEET M102 FOR CONTINUATION.
2. 12"X5" UNLINED RA DROP DOWN IN WALL TO R-1 RETURN AIR GRILLE. TYPICAL. REFER TO ARCHITECTURAL DETAILS FOR DUCT DROPS LOCATED IN ACOUSTICAL WALLS.
3. COMPRESSOR UNIT. PROVIDE MINIMUM 2'-0" CLEAR ALL AROUND. PROVIDE 30" MINIMUM CLEARANCE AT SERVICE SIDE. REFER TO SHEET M501 FOR REFRIGERANT PIPING SCHEME AND DETAILS. TYPICAL FOR ALL UNITS.
4. GAS METER LOCATION. PROVIDE 3'-0" MINIMUM CLEAR TO COMPRESSOR UNIT.
5. ALL CEILING DIFFUSERS ARE 4-WAY BLOW UNLESS SHOWN OTHERWISE. TYPICAL.
6. DUCT DROP IN CHASE.
7. SIDEWALL SUPPLY GRILLE IS MOUNTED HIGH ON THE WALL NEAR THE CEILING. REFER TO ARCHITECTURAL ELEVATION PLANS FOR EXACT PLACEMENT.
8. INSTALL RIGID DUCT THROUGH FLOOR TO DIFFUSER. SEAL AT FLOOR PENETRATION. SEE SHEET M102 FOR CONTINUATION.
9. COORDINATE EXACT LOCATION WITH STRUCTURAL HEADER FLOOR JOISTS IF REQUIRED.

LEGEND

SYMBOL	DESCRIPTION	SYMBOL	DESCRIPTION	SYMBOL	DESCRIPTION
	BRANCH DUCT TAKE-OFF SEE DETAIL A/M502		BDD - (BACK DRAFT DAMPER)	SA	SUPPLY AIR
				RA	RETURN AIR/RELIEF AIR TO ERV's
	SINGLE THICKNESS TURNING VANES		MANUAL VOLUME DAMPER	OA	OUTSIDE AIR
				TA	TRANSFER AIR
	DUCT TRANSITION		FLEX. CONNECTION 6"-0" MAX LENGTH - SEE DETAIL F/M502	FA	FRESH AIR (ERV LABEL)
				EA	EXHAUST AIR
	MOTORIZED DAMPER	SD-1	DUCT SMOKE DETECTOR. INSTALL 12x12 ACCESS DOOR AT ALL LOCATIONS	AF	ABOVE FLOOR
				SL UP	SLOPE UP OR DN

bhd ARCHITECTS
www.bhdarchitects.com
Phone 801.571.0010
Fax 801.571.0303
Toll Free 888.571.0010
65 East Wadsworth Park Drive
Suite 205 Draper, Utah 84020

THE CHURCH OF JESUS CHRIST OF LATTER-DAY SAINTS

Springwater 9
Vineyard UT Springwater Stake

Approx. 542 South Geneva Road
Vineyard, Utah 84059

Owner #: 502-2004
Plan Series: G300-MH-11
County Parcel: 39-228-0001
BHD #: 2346
Date: 15 Aug 2024

Drawing Issue and Revision Schedule

#	Date	Description

Engineered Systems Associates
1355 EAST CENTER
POCATELLO, IDAHO 83201
PHONE: (208) 233-0501
FAX: (208) 233-0529
EMAIL: esa@engsystems.com
ESA JOB NUMBER: 24066

LICENSED PROFESSIONAL ENGINEER — DAVID L. HANSEN — Aug 15, 2024 — STATE OF UTAH

MAIN FLOOR MECHANICAL PLAN

M101

8/14/2024 5:25:15 PM

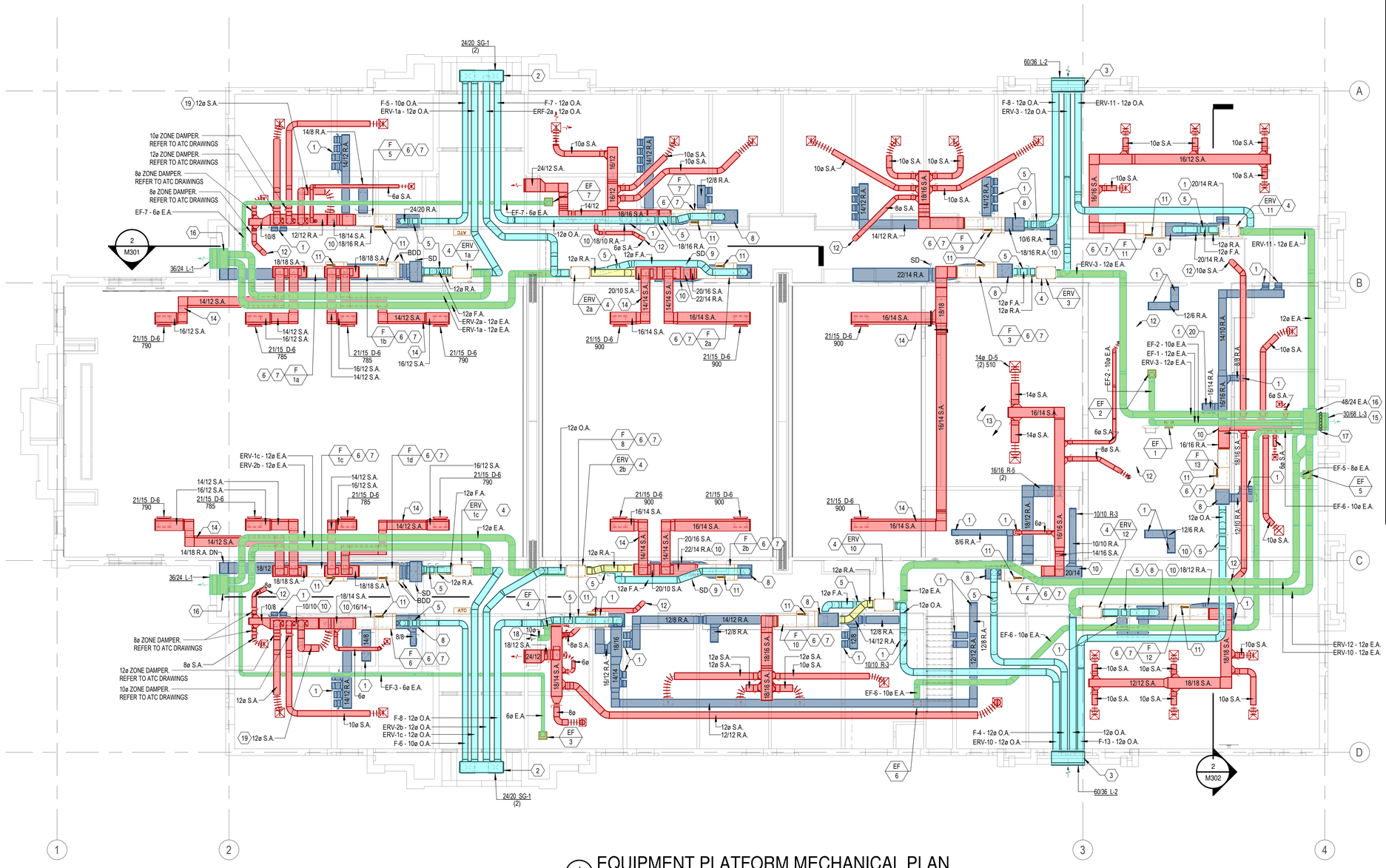

1 EQUIPMENT PLATFORM MECHANICAL PLAN

SCALE: 1/8" = 1'-0"

KEYED NOTES

#	
1	REFER TO SHEET M101 FOR CONTINUATION.
2	PROVIDE 20" WIDE X 24" HIGH PLENUM FULL LENGTH OF BOTH SOFFIT GRILLES.
3	24" DEEP OUTSIDE AIR INTAKE PLENUM. INSTALL ICE AND WATER SHIELD AT INTERIOR OF PLENUM. SLOPE BOTTOM TOWARDS EXTERIOR WALL. WRAP WITH SPECIFIED INSULATION.
4	REFER TO DETAIL H/M502 FOR ERV UNIT DAMPER REQUIREMENTS AND SUSPENDED MOUNTING. TYPICAL FOR ALL ERV'S.
5	REFER TO DETAIL F/M503 FOR OUTSIDE AIR CONTROLS.
6	REFER TO DETAILS A, B, AND D SHEET M503. TYPICAL.
7	REFER TO DETAIL G/M502 FOR EXTERNAL FILTER SECTION. TYPICAL OF ALL HORIZONTAL FAN SYSTEMS.
8	MIXED AIR PLENUM AT INLET TO FAN UNIT. FULL SIZE. DUCT SIZE TO MATCH RA CONNECTION SIZE. TYPICAL OF ALL SYSTEMS.
9	INSTALL IN RA DUCT BELOW.
10	RA DUCT BELOW.
11	CONCENTRIC VENT AND COMBUSTION AIR PIPING UP THROUGH ROOF. REFER TO DETAIL C AND D/M503. DO NOT BLOCK ACCESS WITH PIPING. TYPICAL FOR ALL FAN SYSTEMS. LOCATE VENTS ALIGNED ALONG BUILDING AXIS AND AWAY FROM ROOF PEAKS AND VALLEYS.
12	INSTALL RIGID DUCT THROUGH FLOOR TO DIFFUSER. SEAL AT FLOOR PENETRATION.
13	RUN DUCTWORK BELOW CATWALK AND BOTTOM CHORD OF ROOF TRUSS.
14	RUN DUCTWORK IN TRUSS SPACE AND BETWEEN TRUSS WEBS. TYPICAL OF UPPER SUPPLY DUCTWORK FOR CHAPEL AND CULTURAL CENTER.
15	SEE NOTE #14 SHEET M601 REGISTER, LOUVER AND GRILLE SCHEDULE FOR REQUIRED DIMENSION INFORMATION.
16	EXHAUST AIR PLENUM.
17	30"x68" BACKDRAFT DAMPER.
18	EXHAUST FAN TO DISCHARGE AIR INTO THE CEILING SPACE DIRECTLY ABOVE THE TECH ROOM. PROVIDE DUCTWORK AS SHOWN TO DIRECT AIRFLOW.
19	SUPPLY DIFFUSER IS OVERSIZED FOR FAN SYSTEM RELIEF.
20	COORDINATE EXACT LOCATION WITH STRUCTURAL. HEADER FLOOR JOISTS IF REQUIRED.

bhd ARCHITECTS
www.bhdarchitects.com
Phone 801.571.0010
Fax 801.571.0303
Toll Free 888.571.0010
65 East Wadsworth Park Drive
Suite 205 Draper, Utah 84020

THE CHURCH OF JESUS CHRIST OF LATTER-DAY SAINTS

Springwater 9
Vineyard UT Springwater Stake

Approx. 542 South Geneva Road
Vineyard, Utah 84059

Owner #: 502-2004
Plan Series: G300-MH-11
County Parcel: 39-228-0001
BHD #: 2346
Date: 15 Aug 2024

Drawing Issue and Revision Schedule

#	Date	Description

Engineered Systems Associates
1355 EAST CENTER
POCATELLO, IDAHO 83201
PHONE: (208) 233-0501
FAX: (208) 233-0529
EMAIL: esa@engsystems.com
ESA JOB NUMBER: 24066

REGISTERED PROFESSIONAL ENGINEER
DAVID L. HANSEN
Aug 15, 2024
STATE OF UTAH

EQUIPMENT PLATFORM MECHANICAL PLAN

M102

8/14/2024 5:25:18 P.M.

KEYED NOTES

#	
1	LOCATED IN WALL BEYOND. REFER TO SHEET M101.
2	ENERGY RECOVERY VENTILATOR. REFER TO DETAIL H/M502.
3	REFER TO DETAIL G/M502 FOR EXTERNAL FILTER SECTION. TYPICAL OF ALL HORIZONTAL FAN SYSTEMS.
4	REFER TO DETAILS A, B, AND D SHEET M503. TYPICAL.
5	CONCENTRIC VENT AND COMBUSTION AIR PIPING UP THROUGH ROOF. REFER TO DETAIL C AND D/M503. DO NOT BLOCK ACCESS WITH PIPING. TYPICAL FOR ALL FAN SYSTEMS. LOCATE VENTS ALIGNED ALONG BUILDING AXIS AND AWAY FROM ROOF PEAKS AND VALLEYS.
6	HORIZONTAL 16"x20" RA DUCT AT BOTTOM OF CHASE. REFER TO SECTION 1 AND 2/M301.
7	MIXED AIR PLENUM AT INLET TO FAN UNIT. FULL SIZE. TYPICAL OF ALL SYSTEMS.
8	REFER TO DETAIL F/M503 FOR OUTSIDE AIR CONTROLS.
9	INSTALL RIGID DUCT THROUGH FLOOR TO DIFFUSER. SEAL AT FLOOR PENETRATION.
10	INSTALL ALL LOW SIDEWALL RETURN AIR GRILLES AT 8" FROM FINISH FLOOR TO BOTTOM EDGE OF GRILLE FRAME. TYPICAL.
11	CO2 SENSOR SHOWN HERE FOR CLARITY. SENSOR SHALL BE LOCATED (AS SHOWN) IN FAN SYSTEM F-1a/F-1b LOCATED AT GRID LINE "B" NEAR ASSOCIATED RP-6 PANEL.

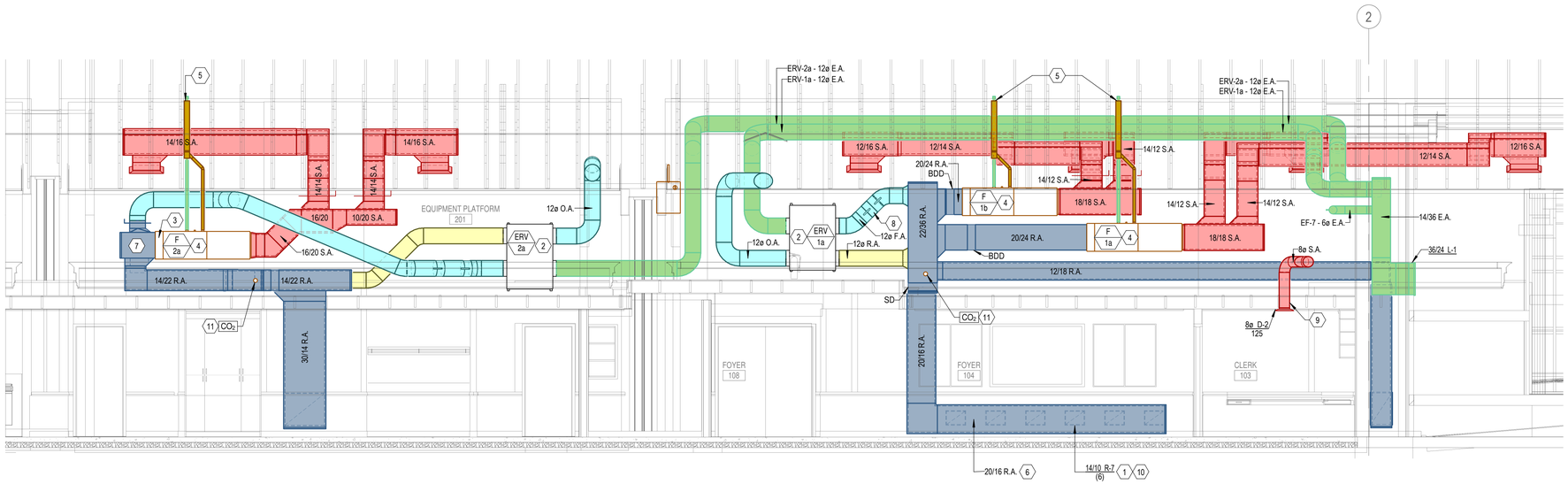

2 MECHANICAL SECTION
SCALE: 1/4" = 1'-0"

bhd ARCHITECTS
www.bhdarchitects.com
Phone 801.571.0010
Fax 801.571.0303
Toll Free 888.571.0010
65 East Wadsworth Park Drive
Suite 205 Draper, Utah 84020

THE CHURCH OF JESUS CHRIST OF LATTER-DAY SAINTS

Springwater 9
Vineyard UT Springwater Stake

Approx. 542 South Geneva Road
Vineyard, Utah 84059

Owner #: 502.2004
Plan Series: G300-MH-11
County Parcel: 39:228:0001
BHD #: 2346
Date: 15 Aug 2024

Drawing Issue and Revision Schedule

#	Date	Description

MECHANICAL SECTIONS

M301

Engineered Systems Associates
1355 EAST CENTER
POCATELLO, IDAHO 83201
PHONE: (208) 233-0501
FAX: (208) 233-0529
EMAIL: esa@engsystems.com
ESA JOB NUMBER: 24066

REGISTERED PROFESSIONAL ENGINEER
DAVID L. HANSEN
Aug 15, 2024
STATE OF UTAH

8/14/2024 5:25:20 PM

KEYED NOTES

#	
1	REFER TO DETAILS A, B, AND D SHEET M503. TYPICAL.
2	CONCENTRIC VENT AND COMBUSTION AIR PIPING UP THROUGH ROOF. REFER TO DETAIL C AND D/M503. DO NOT BLOCK ACCESS WITH PIPING. TYPICAL FOR ALL FAN SYSTEMS. LOCATE VENTS ALIGNED ALONG BUILDING AXIS AND AWAY FROM ROOF PEAKS AND VALLEYS.
4	INSTALL RIGID DUCT THROUGH FLOOR TO DIFFUSER. SEAL AT FLOOR PENETRATION.
5	REFER TO SHEET M102 FOR CONTINUATION.
6	REFER TO SHEET M101 FOR CONTINUATION.
8	INSTALL ALL LOW SIDEWALL RETURN AIR GRILLES AT 8" FROM FINISH FLOOR TO BOTTOM EDGE OF GRILLE FRAME. TYPICAL.
9	ENERGY RECOVERY VENTILATOR. REFER TO DETAIL H/M502.
10	REFER TO DETAIL G/M502 FOR EXTERNAL FILTER SECTION. TYPICAL OF ALL HORIZONTAL FAN SYSTEMS.
11	MIXED AIR PLENUM AT INLET TO FAN UNIT. FULL SIZE. TYPICAL OF ALL SYSTEMS.
12	CO2 SENSOR SHOWN HERE FOR CLARITY. SENSOR SHALL BE LOCATED (AS SHOWN) IN FAN SYSTEM F-1a/F-1b LOCATED AT GRID LINE "B" NEAR ASSOCIATED RP-6 PANEL.

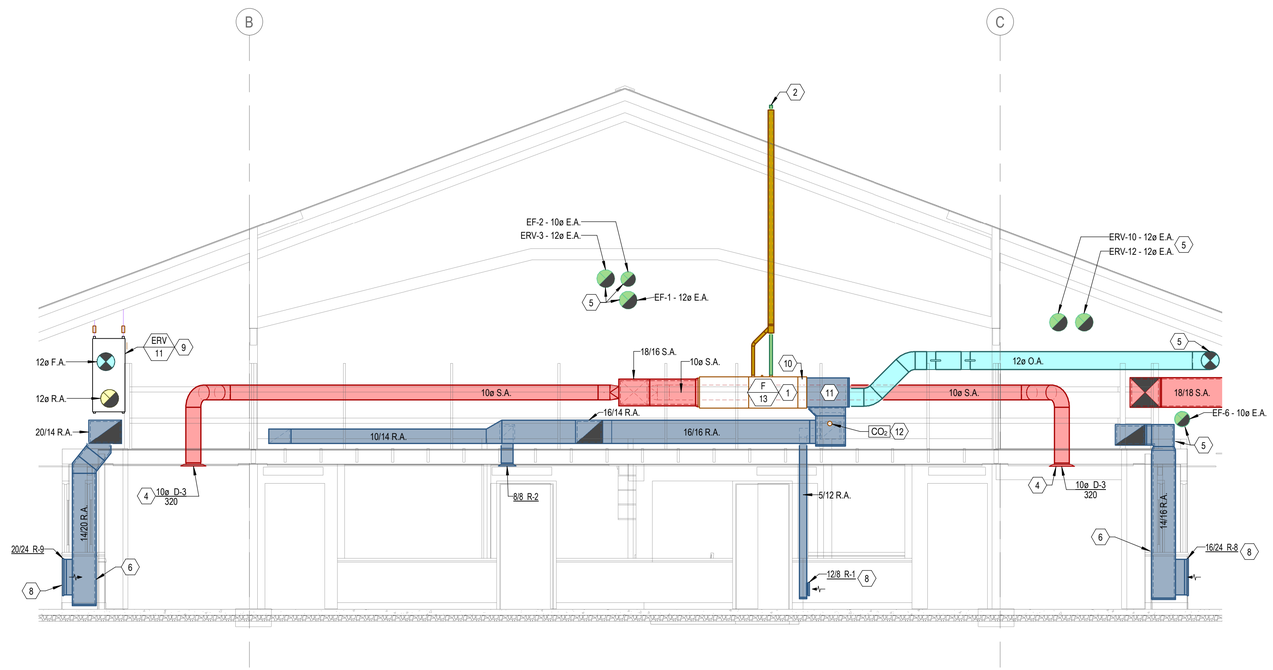

2 MECHANICAL SECTION
SCALE: 1/4" = 1'-0"

bhd ARCHITECTS
www.bhdarchitects.com
Phone 801.571.0010
Fax 801.571.0303
Toll Free 888.571.0010
65 East Wadsworth Park Drive
Suite 205 Draper, Utah 84020

THE CHURCH OF JESUS CHRIST OF LATTER-DAY SAINTS

Springwater 9
Vineyard UT Springwater Stake

Approx. 542 South Geneva Road
Vineyard, Utah 84059

BHD #: 2346
County Parcel: 39-228:0001
Plan Series: G300-MH-11
Owner #: 502-2004
Date: 15 Aug 2024

Drawing Issue and Revision Schedule

#	Date	Description

REGISTERED PROFESSIONAL ENGINEER
DAVID L. HANSEN
Aug 15, 2024
STATE OF UTAH

Engineered Systems Associates
1355 EAST CENTER
POCATELLO, IDAHO 83201
PHONE: (208) 233-0501
FAX: (208) 233-0529
EMAIL: esa@engsystems.com

ESA JOB NUMBER: 24066

MECHANICAL SECTIONS

M302

8/14/2024 5:25:21 PM

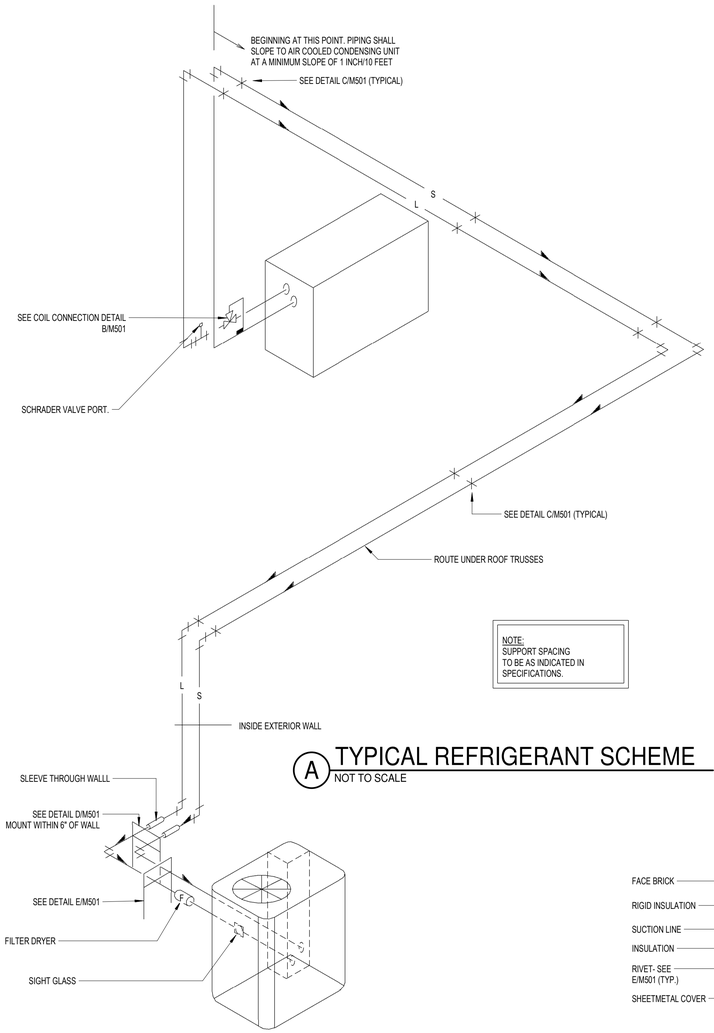

A TYPICAL REFRIGERANT SCHEME
NOT TO SCALE

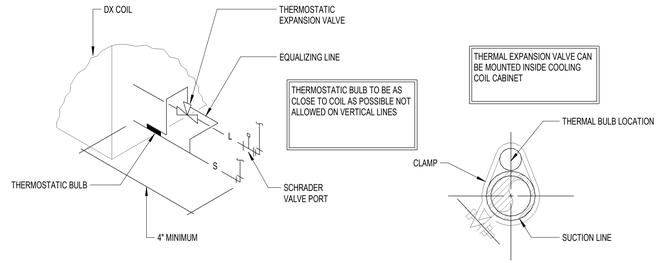

B REFRIGERANT COIL CONNECTION DETAIL
NOT TO SCALE

REFRIGERANT PIPING LEGEND

SYMBOL	DESCRIPTION
	EXPANSION VALVE. SEE DETAIL B/M501
	MOISTURE INDICATING SIGHT GLASS
	FLEXIBLE CONNECTION
F	FILTER DRIER
	PIPE SUPPORT. SEE DETAIL C/M501
	EXTERIOR PIPE SUPPORT. SEE DETAIL D/M501 AND E/M501
	DIRECTION OF SLOPE DOWN
S	SUCTION LINE
L	LIQUID LINE
	SCHRADER VALVE PORT

REFRIGERANT LINE SIZES

SYSTEM SIZE	LIQUID	SUCTION
2.0 TON	3/8"	3/4"
2.5 TON	3/8"	3/4"
3.0 TON	3/8"	7/8"
3.0 TON	3/8"	7/8"
4.0 TON	3/8"	7/8"
5.0 TON	3/8"	1 1/8"

*REFER TO COMPRESSOR UNIT SCHEDULE ON SHEET M601 FOR SYSTEM SIZES.

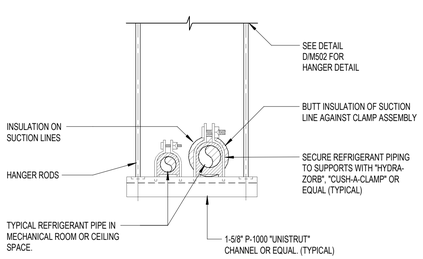

C SUSPENDED REFRIGERANT PIPE SUPPORT AT CEILING
NOT TO SCALE

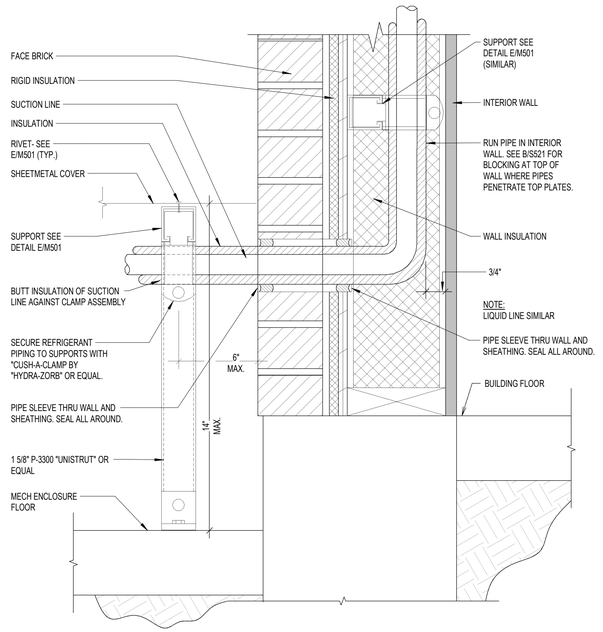

D REFRIGERANT PIPE SUPPORT AT WALL DETAIL
NOT TO SCALE

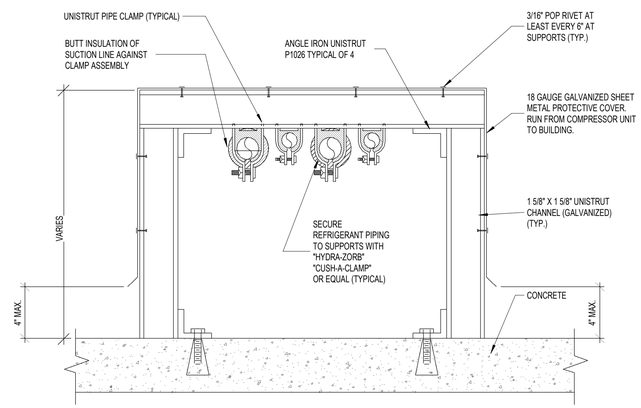

E EXTERIOR REFRIGERANT PIPE SUPPORT DETAIL
NOT TO SCALE

bhd ARCHITECTS
www.bhdarchitects.com
Phone 801.571.0010
Fax 801.571.0303
Toll Free 888.571.0010
65 East Wadsworth Park Drive
Suite 205 Draper, Utah 84020

THE CHURCH OF JESUS CHRIST OF LATTER-DAY SAINTS

Springwater 9
Vineyard UT Springwater Stake

Approx. 542 South Geneva Road
Vineyard, Utah 84059

BHD #: 2346
County Parcel: 39:228:0001
Plan Series: C300-MH-11
Owner #: 502-2004
Date: 15 Aug 2024

Drawing Issue and Revision Schedule

#	Date	Description

MECHANICAL DETAILS

M501

Engineered Systems Associates
1355 EAST CENTER
POCATELLO, IDAHO 83201
PHONE: (208) 233-0501
FAX: (208) 233-0529
EMAIL: esa@engsystems.com
ESA JOB NUMBER: 24066

LICENSED PROFESSIONAL ENGINEER
DAVID L. HANSEN
Aug 15, 2024
STATE OF UTAH

8/14/2024 5:25:22 PM

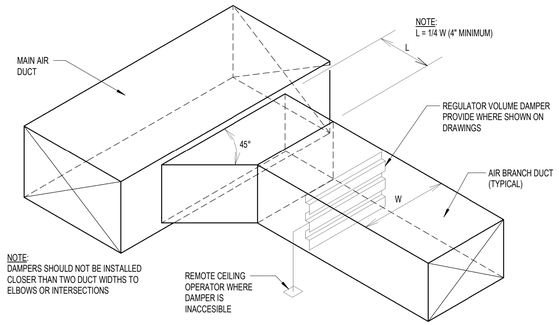

A SUPPLY OR RETURN AIR DUCT BRANCH CONNECTION DETAIL

NOT TO SCALE

DIMENSION OF LONGEST SIDE (INCHES)	SHEET METAL GAGE (ALL FOUR SIDES)	TRANSVERSE REINFORCING (1)					
		MINIMUM REINFORCING ANGLE SIZE AND MAXIMUM LONGITUDINAL SPACING BETWEEN TRANSVERSE JOINTS AND/OR INTERMEDIATE REINFORCING	AT JOINTS				
			MIN. H. (IN)	DRIVE SLIP PLAIN 'S' SLIP	HEMMED 'S' SLIP	ALTER/NT BAR SLIP	REIN-FORCED BAR SLIP
				RECOM-MENDED GAGE	RECOM-MENDED GAGE	RECOM-MENDED GAGE	RECOM-MENDED GAGE
UP THRU 12	26	NONE REQUIRED	1	26	26	24	24
13 - 18	24	NONE REQUIRED	1	24	24	24	24
19 - 30	24	1"x1"x1/8" @ 60 IN	1	-	24	24	24
31 - 36	22	1"x1"x1/8" @ 60 IN	1	-	-	22	22

1. TRANSVERSE REINFORCING SIZE IS DETERMINED BY DIMENSION OF SIDE TO WHICH ANGLE IS APPLIED.
2. LONGITUDINAL JOINTS TO BE PITTSBURG OR SNAP LOCK TYPE.

B DUCT CONSTRUCTION DETAIL

NOT TO SCALE

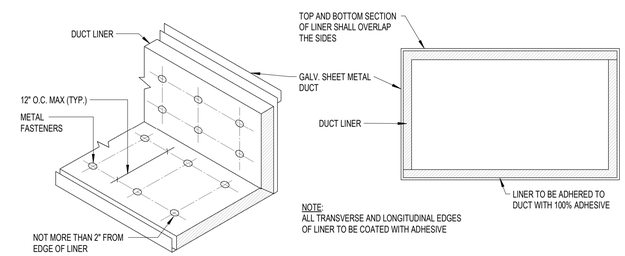

C DUCT LINER DETAIL

NOT TO SCALE

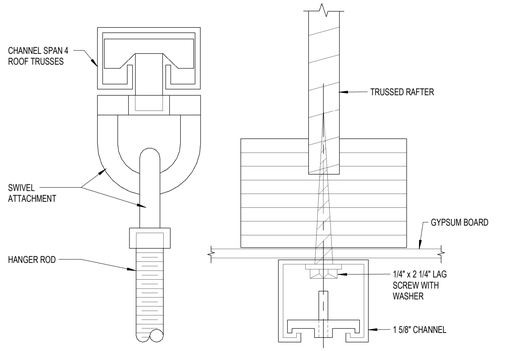

D UPPER ATTACHMENT DETAIL

NOT TO SCALE

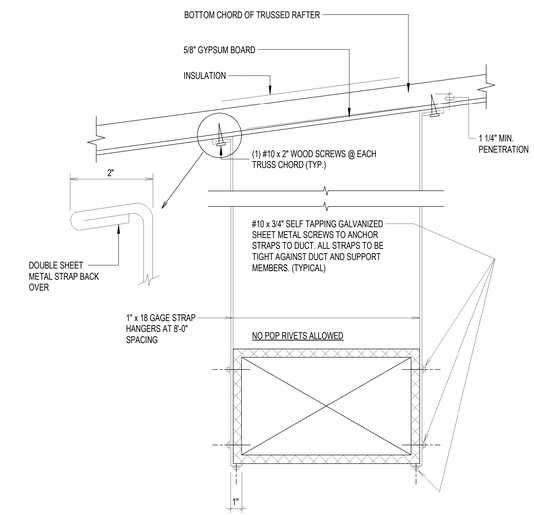

E DUCT STRAP HANGER DETAIL

NOT TO SCALE

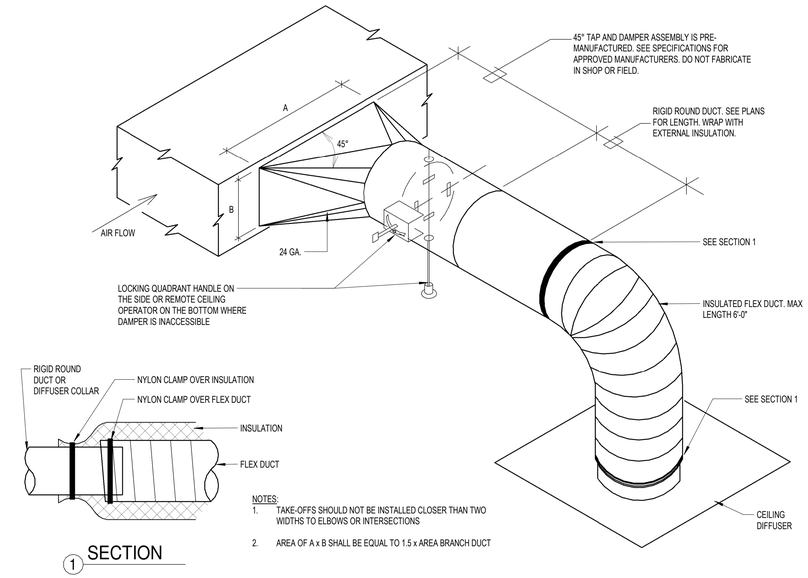

1 SECTION

F SQUARE TO ROUND TAKE-OFF DETAIL

NOT TO SCALE

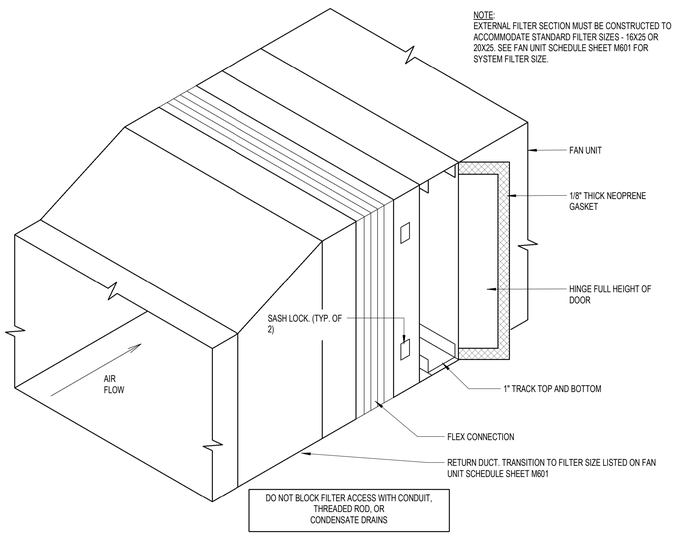

G EXTERNAL FILTER SECTION DETAIL

NOT TO SCALE

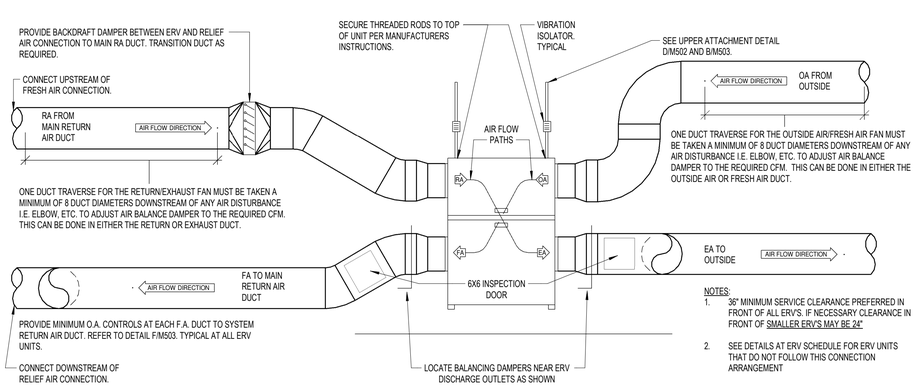

H TYPICAL ERV DAMPERING DETAIL

NOT TO SCALE

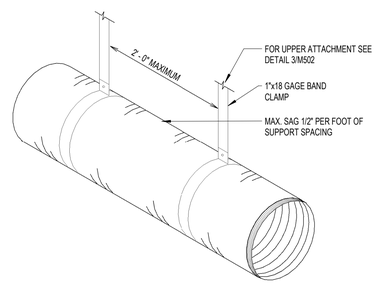

J FLEXIBLE DUCT SUPPORT DETAIL

NOT TO SCALE

bhd ARCHITECTS
www.bhdarchitects.com
Phone 801.571.0010
Fax 801.571.0303
Toll Free 888.571.0010
65 East Wadsworth Park Drive
Suite 205 Draper, Utah 84020

THE CHURCH OF JESUS CHRIST OF LATTER-DAY SAINTS

Springwater 9
Vineyard UT Springwater Stake

Approx. 542 South Geneva Road
Vineyard, Utah 84059

BHD #: 2346
County Parcel: 39:228:0001
Plan Series: G300-MH-11
Owner #: 502-2004
Date: 15 Aug 2024

Drawing Issue and Revision Schedule

#	Date	Description

MECHANICAL DETAILS

M502

Engineered Systems Associates
1355 EAST CENTER
POCATELLO, IDAHO 83201
PHONE: (208) 233-0501
FAX: (208) 233-0529
EMAIL: esa@engsystems.com
ESA JOB NUMBER: 24066

LICENSED PROFESSIONAL ENGINEER — DAVID L. HANSEN — Aug 15, 2024 — STATE OF UTAH

8/14/2024 5:25:24 PM

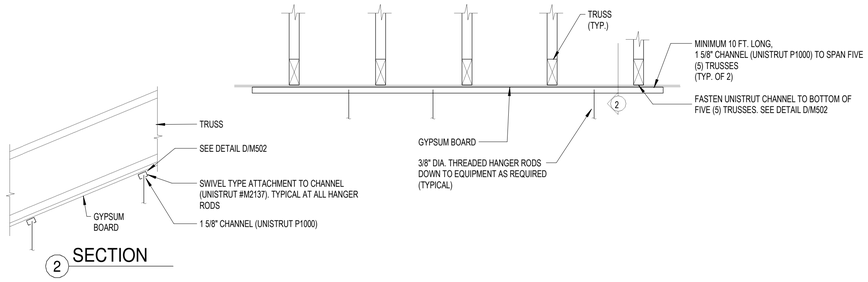

A UPPER SUPPORT DETAIL FOR TRUSSED RAFTERS PERPENDICULAR WITH FAN SYSTEM

NOT TO SCALE

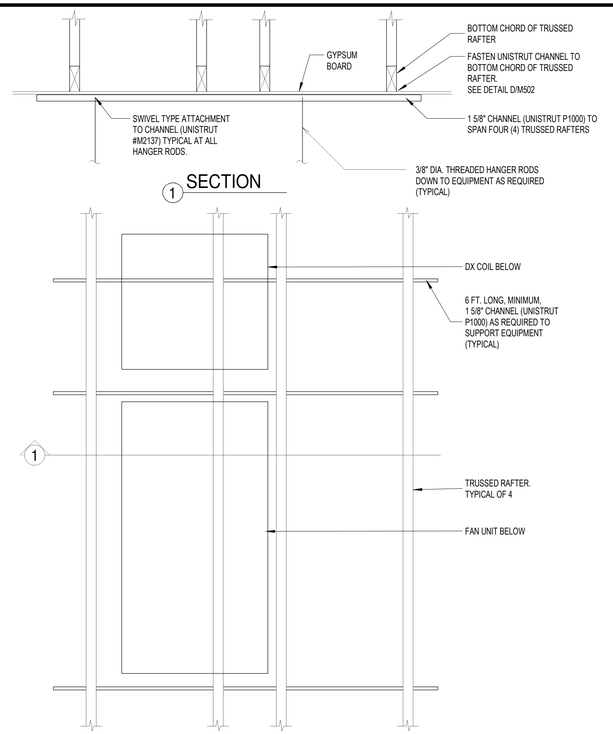

B UPPER SUPPORT DETAIL FOR TRUSSED RAFTERS PARALLEL WITH FAN SYSTEM

NOT TO SCALE

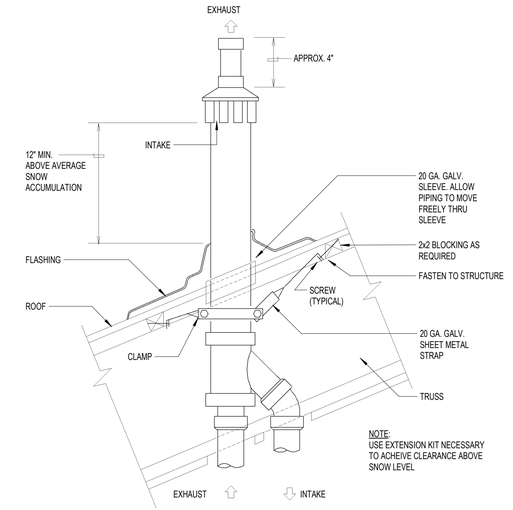

C CONCENTRIC ROOF TERMINATION DETAIL

NOT TO SCALE

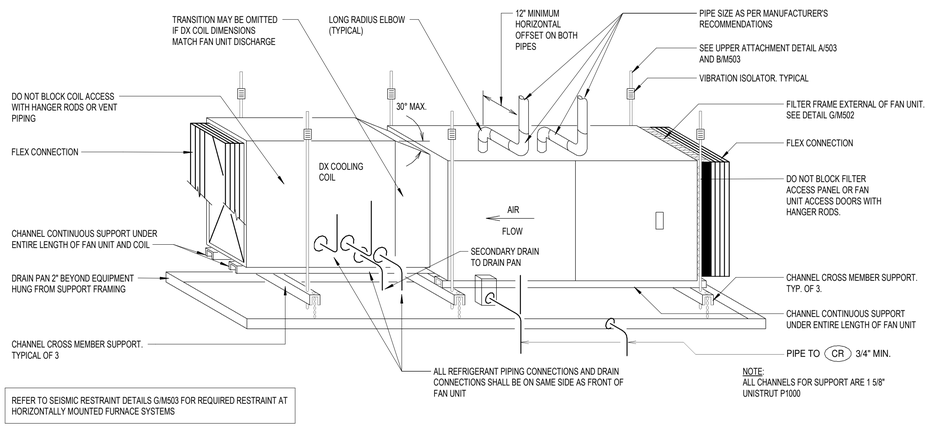

D FAN UNIT SUPPORT DETAIL

NOT TO SCALE

NOTE:
PROVIDE TWO LOCATIONS PER FURNACE SYSTEM, BOTH WITHIN 9" OF EACH END

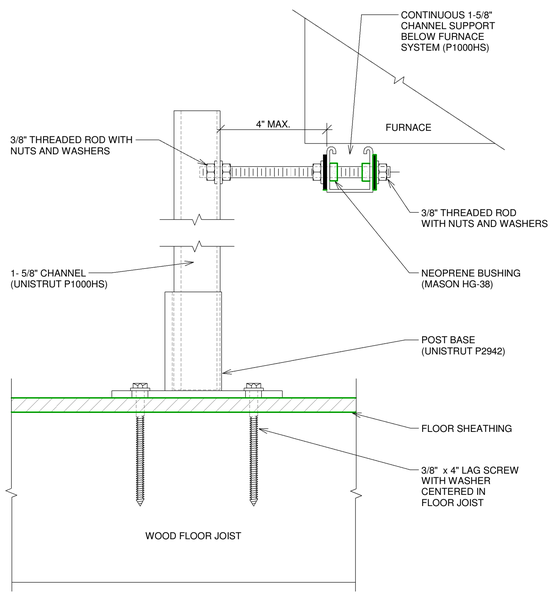

OPTION 1

NOTE:
PROVIDE TWO LOCATIONS PER FURNACE SYSTEM, BOTH WITHIN 9" OF EACH END

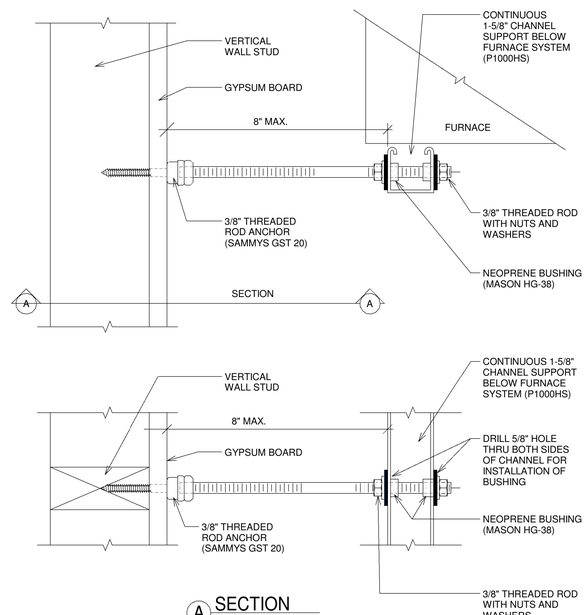

A SECTION

OPTION 2

1 HORIZONTAL FURNACE SEISMIC RESTRAINT DETAIL

SCALE: 12" = 1'-0"

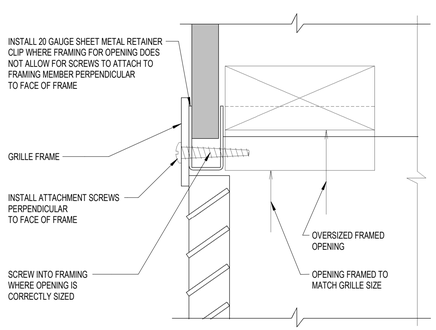

E GRILLE ATTACHMENT DETAIL

NOT TO SCALE

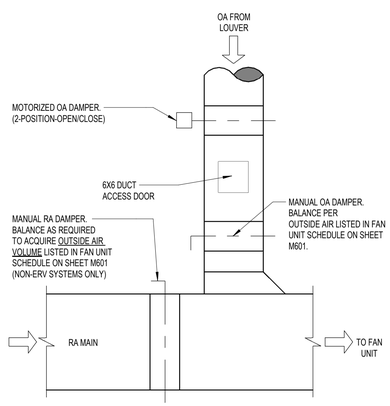

F TYPICAL OUTSIDE AIR DUCT DETAIL

NOT TO SCALE

bhd ARCHITECTS
www.bhdarchitects.com
Phone 801.571.0010
Fax 801.571.0303
Toll Free 888.571.0010
65 East Wadsworth Park Drive
Suite 205 Draper, Utah 84020

THE CHURCH OF JESUS CHRIST OF LATTER-DAY SAINTS

Springwater 9
Vineyard UT Springwater Stake

Approx. 542 South Geneva Road
Vineyard, Utah 84059

Owner #: 502-2004
Plan Series: G300-MH-11
County Parcel: 39-228:0001
BHD #: 2346
Date: 15 Aug 2024

Drawing Issue and Revision Schedule

#	Date	Description

MECHANICAL DETAILS

M503

Engineered Systems Associates
1355 EAST CENTER
POCATELLO, IDAHO 83201
PHONE: (208) 233-0501
FAX: (208) 233-0529
EMAIL: esa@engsystems.com
ESA JOB NUMBER: 24066

LICENSED PROFESSIONAL ENGINEER DAVID L. HANSEN Aug 15, 2024 STATE OF UTAH

8/14/2024 5:25:24 PM

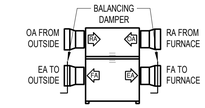

CONNECT OPPOSITE DUCTS TO LABELED CONNECTIONS

OPPOSITE ERV-UNIT: 2b AND 10



CONNECT MATCHING DUCTS TO LABELED CONNECTIONS

INVERTED ERV-UNITS: 1a AND 3

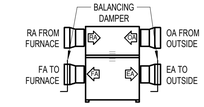

CONNECT MATCHING DUCTS TO LABELED CONNECTIONS

ERV-UNITS: 2a

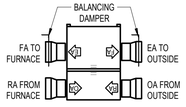

CONNECT OPPOSITE DUCTS TO LABELED CONNECTIONS

INVERTED ERV-UNITS: 1c, 11 AND 12

ENERGY RECOVERY VENTILATOR INSTALLATION DIAGRAMS

ENERGY RECOVERY VENTILATOR SCHEDULE

MARK	CFM	ELECTRICAL				REMARKS
		FLA	MCA	VOLTAGE	PHASE	
ERV-1a	740	17.2	19.4	115	1	SEE NOTES 1,2,3
ERV-1c	740	17.2	19.4	115	1	SEE NOTES 1,2,3
ERV-2a	800	17.2	19.4	115	1	SEE NOTES 1,2,3
ERV-2b	800	17.2	19.4	115	1	SEE NOTES 1,2,3
ERV-3	800	17.2	19.4	115	1	SEE NOTES 1,2,3
ERV-10	600	17.2	19.4	115	1	SEE NOTES 1,2,3
ERV-11	635	17.2	19.4	115	1	SEE NOTES 1,2,3
ERV-12	745	17.2	19.4	115	1	SEE NOTES 1,2,3

1. RENEWAIRE MODEL HE1XINV. TWO 0.75 HP FANS. 25 MAX. FUSE SIZE.
2. ENERGY RECOVERY VENTILATOR MARKS CORRESPOND WITH FAN UNIT MARKS.
3. SEE ERV INSTALLATION DIAGRAMS TO THE LEFT.

EXHAUST FAN SCHEDULE

MARK	LOCATION		MINIMUM A.C.F.M.	STATIC PRESSURE IN. W.G.	WATTS	REMARKS
	ROOM NAME	ROOM NUMBER				
EF-1	WOMEN	156	420	0.250	330 W	SEE NOTES 1,2,3,4
EF-2	MEN	155	350	0.250	250 W	SEE NOTES 1,2,3,4
EF-3	MOTHERS' ROOM	135	70	0.250	81 W	SEE NOTES 1,2,3,4
EF-4	TECH	136	200	0.250	166 W	SEE NOTES 1,2,3,4,5
EF-5	FAMILY RESTROOM	122	140	0.250	100 W	SEE NOTES 1,2,3,4
EF-6	SERVING AREA	130	200	0.250	166 W	SEE NOTES 1,2,3,4
EF-7	MEMBER CUSTODIAL	110	70	0.250	81 W	SEE NOTES 1,2,3,4

1. SET BALANCE DAMPERS SHOWN ON M101 TO CFM LISTED
2. PROVIDE BACKDRAFT DAMPER
3. CONTROL BY DIVISION 26
4. VOLTAGE IS 115V/1PHASE/60HZ
5. LINE VOLTAGE THERMOSTAT CONTROL ACCESSORY THERMOSTAT BY DIVISION 23, INSTALLED BY DIV 26.

DIFFUSER SCHEDULE

MARK	QUANTITY	CFM RANGE	DIFFUSER SIZE	NECK CONN.	BLOW	PATTERN	AIR DIST. / SIDE		REMARKS
							A (%)	B (%)	
D-1	8	60 - 120	6x6	6ø	4 WAY UNLESS NOTED ON M101		--	--	SEE NOTES 1,2,3
D-2	8	125 - 240	9x9	8ø	4 WAY UNLESS NOTED ON M101		--	--	SEE NOTES 1,2,3
D-3	26	245 - 380	12x12	10ø	4 WAY UNLESS NOTED ON M101		--	--	SEE NOTES 1,2,3
D-4	7	385 - 470	12x12	12ø	4 WAY UNLESS NOTED ON M101		--	--	SEE NOTES 1,2,3
D-5	2	475 - 640	15x15	14ø	4 WAY UNLESS NOTED ON M101		--	--	SEE NOTES 1,2,3
D-6	14	675 - 900	21x15	21/15	3 WAY	A B	35	33	SEE NOTES 1,2,3

1. MAXIMUM NC = 25 @ MAXIMUM CFM NOTED
2. SHALL BE TITUS TDC TYPE 6 OR EQUAL BY OTHER APPROVED MANUFACTURERS (SEE SPECIFICATIONS)
3. FINISH SHALL BE OFF-WHITE BAKED ENAMEL

REGISTER, LOUVER & GRILLE SCHEDULE

MARK	QUANTITY	TYPE	SERVICE	CFM RANGE	MAX NC	NOMINAL SIZE	REMARKS
L-1	2	LOUVER	EA	1635 - 1780	25	36x24	SEE NOTES 1,6,10,13
L-2	2	LOUVER	OA	2005 - 2130	25	60x36	SEE NOTES 1,6,9,10
L-3	1	LOUVER	EA	3940	25	30x68	SEE NOTES 1,6,10,13,14
L-4	1	LOUVER	ARCHITECT	N/A	25	12x12	SEE NOTES 1,6,10,11
R-1	37	SIDEWALL	RA	100 - 250	25	12x8	SEE NOTES 1,3,4,8
R-2	6	CEILING	RA	50 - 220	25	8x8	SEE NOTES 1 & 2
R-3	2	CEILING	RA	225 - 350	25	10x10	SEE NOTES 1 & 2
R-4	3	CEILING	RA	355 - 520	25	12x12	SEE NOTES 1 & 2
R-5	5	CEILING	RA	525 - 850	25	16x16	SEE NOTES 1 & 2
R-6	4	CEILING	TRANSFER AIR	250 - 500	25	12x12	SEE NOTES 1 & 2
R-7	12	SIDEWALL	RA	360	25	14x10	SEE NOTES 1,3,4,8,12
R-8	4	SIDEWALL	RA	900 - 990	25	16x24	SEE NOTES 1,3,4,8,12
R-9	1	SIDEWALL	RA	1575	25	20x24	SEE NOTES 1,3,4,8,12
R-10	3	SIDEWALL	RA	1580 - 1800	25	30x24	SEE NOTES 1,3,4,8,12
S-1	2	SIDEWALL	SA	660	25	24x12	SEE NOTES 1,4,9
SG-1	4	SOFFIT GRILLE	OA	1100 - 1145	25	24x20	SEE NOTES 1,6,10

1. SEE SPECIFICATIONS FOR APPROVED MANUFACTURERS
2. FINISH SHALL BE OFF-WHITE BAKED ENAMEL
3. BAKED ENAMEL FINISH WITH COLOR AS DIRECTED BY ARCHITECT
4. RETURN AIR GRILLE TO BE MOUNTED 8" FROM FLOOR TO BOTTOM EDGE OF GRILLES
5. BAKED ENAMEL FINISH TO MATCH ROOF COLOR OR COLOR AS DIRECTED BY ARCHITECT
6. PROVIDE ALUMINUM BIRD SCREEN OR INSECT SCREEN. SEE SPECIFICATIONS
7. SET REGISTER BLADES FOR 15° UPWARD DEFLECTION
8. BLADE ORIENTATION SHALL BE HORIZONTAL
9. MAX. ACCEPTABLE FACE VELOCITY THROUGH NET FREE AREA: 400 FT/MIN.
10. FINISH COLOR, AS DIRECTED BY ARCHITECT, TO MATCH SURROUNDING SURFACE FINISH
11. ON STORAGE BUILDING. NOT CONNECTED TO DUCTWORK. SEE ELEVATION F/C801
12. REFER TO DETAIL E/M503 FOR GRILLE INSTALLATION
13. MAX. ACCEPTABLE FACE VELOCITY THROUGH NET FREE AREA: 600 FT/MIN.
14. SEE ARCHITECTURAL ELEVATIONS FOR EXACT DIMENSIONS AND SHAPE

FAN UNIT SCHEDULE (GAS FIRED FURNACE)

MARK	MIN. REQ'D OUTPUT BTU/H	MINIMUM A.C.F.M.	MINIMUM O.A.	EXT. S.P. (IN.W.G.)	STANDARD FILTER SIZE	MOTOR		REMARKS
						MINIMUM H.P.	SPEED	
F-1a	75,000	1575	368	0.60	1x20x25	0.5	HIGH	SEE NOTES 1,2,5,6,7,8,9,10
F-1b	75,000	1575	368	0.60	1x20x25	0.5	HIGH	SEE NOTES 1,2,5,6,7,8,9,10
F-1c	75,000	1575	368	0.60	1x20x25	0.5	HIGH	SEE NOTES 1,2,5,6,7,8,9,10
F-1d	75,000	1575	368	0.60	1x20x25	0.5	HIGH	SEE NOTES 1,2,5,6,7,8,9,10
F-2a	75,000	1800	800	0.60	1x20x25	0.75	HIGH	SEE NOTES 1,2,5,6,7,8,9,10
F-2b	75,000	1800	800	0.60	1x20x25	0.75	HIGH	SEE NOTES 1,2,5,6,7,8,9,10
F-3	75,000	1800	800	0.60	1x20x25	0.75	HIGH	SEE NOTES 1,2,5,6,7,8,9,10
F-4	57,000	1350	400	0.60	1x20x25	0.33	HIGH	SEE NOTES 1,2,5,6,7,8,9,10
F-5	57,000	1125	250	0.60	1x16x25	0.33	HIGH	SEE NOTES 1,2,5,6,7,8,9,10
F-6	57,000	1125	250	0.60	1x16x25	0.33	HIGH	SEE NOTES 1,2,5,6,7,8,9,10
F-7	75,000	1575	400	0.60	1x20x25	0.5	HIGH	SEE NOTES 1,2,5,6,7,8,9,10
F-8	75,000	1350	310	0.60	1x20x25	0.33	HIGH	SEE NOTES 1,2,5,6,7,8,9,10
F-9	75,000	1575	470	0.60	1x20x25	0.5	HIGH	SEE NOTES 1,2,5,6,7,8,9,10
F-10	75,000/49,000	1575	600	0.60	1x20x25	0.75	SEE REMARKS	SEE NOTES 1,2,3,4,5,7,8,9,10
F-11	75,000/49,000	1575	635	0.60	1x20x25	0.75	SEE REMARKS	SEE NOTES 1,2,3,4,5,7,8,9,10
F-12	75,000/49,000	1800	745	0.60	1x20x25	0.75	SEE REMARKS	SEE NOTES 1,2,3,4,5,7,8,9,10
F-13	75,000	1350	250	0.60	1x20x25	0.33	HIGH	SEE NOTES 1,2,5,6,7,8,9,10

1. BTU/H OUTPUT AT SEA LEVEL RATING
2. FURNACE MARKS CORRESPOND WITH CONDENSING UNIT AND COOLING COIL MARKS
3. TWO STAGE HEAT FURNACE: HIGH/LOW
4. VARIABLE SPEED ECM MOTOR
5. ELECTRICAL CHARACTERISTICS - MOTOR: 115V/1PHASE/60HZ
6. FIXED SPEEDS, CONSTANT TORQUE ECM MOTOR
7. SET FAN MOTOR SPEED TAP TO LOWEST POSSIBLE SETTING REQUIRED TO ACHIEVE DESIGN AIR FLOW
8. SEE DETAIL G/M502
9. SEE SPECIFICATION FOR APPROVED MANUFACTURERS
10. 95% MINIMUM AFUE

COMPRESSOR UNIT SCHEDULE (COOLING ONLY)

MARK	MIN. NOMINAL SIZE (TONS)	COMPRESSOR RATED LOAD AMPS	FAN FULL LOAD AMPS	MIN. CIRCUIT AMPS	MOCP	REMARKS
CU-1a	3.5	21.2	1.7	28.1	45	SEE NOTES 1,2,3,4,5,6
CU-1b	3.5	21.2	1.7	28.1	45	SEE NOTES 1,2,3,4,5,6
CU-1c	3.5	21.2	1.7	28.1	45	SEE NOTES 1,2,3,4,5,6
CU-1d	3.5	21.2	1.7	28.1	45	SEE NOTES 1,2,3,4,5,6
CU-2a	4.0	24.2	1.7	31.9	50	SEE NOTES 1,2,3,4,5,6
CU-2b	4.0	24.2	1.7	31.9	50	SEE NOTES 1,2,3,4,5,6
CU-3	4.0	24.2	1.7	31.9	50	SEE NOTES 1,2,3,4,5,6
CU-4	3.0	16.7	1.5	22.0	35	SEE NOTES 1,2,3,4,5,6
CU-5	2.5	14.1	1.1	18.7	30	SEE NOTES 1,2,3,4,5,6
CU-6	2.5	14.1	1.1	18.7	30	SEE NOTES 1,2,3,4,5,6
CU-7	3.5	21.2	1.7	28.1	45	SEE NOTES 1,2,3,4,5,6
CU-8	3.0	16.7	1.5	22.0	35	SEE NOTES 1,2,3,4,5,6
CU-9	3.5	21.2	1.7	28.1	45	SEE NOTES 1,2,3,4,5,6
CU-10	3.5	21.2	1.7	28.1	45	SEE NOTES 1,2,3,4,5,6
CU-11	3.5	21.2	1.7	28.1	45	SEE NOTES 1,2,3,4,5,6
CU-12	4.0	24.2	1.7	31.9	50	SEE NOTES 1,2,3,4,5,6
CU-13	3.0	16.7	1.5	22.0	35	SEE NOTES 1,2,3,4,5,6

1. REFRIGERANT R-410a
2. AT DESIGN CONDITIONS AND 100°F ENTERING AIR TEMPERATURE TO CONDENSER
3. CONDENSING UNIT MARKS CORRESPOND WITH DX COIL AND FURNACE MARKS
4. ELECTRICAL CHARACTERISTICS-COMPRESSOR: 208V/1PHASE/60HZ
5. SEE SPECIFICATION FOR APPROVED MANUFACTURERS. MINIMUM 13.4 SEER 2.
6. COORDINATE ACTUAL ELECTRICAL RATINGS OF UNIT SUPPLIED WITH DIVISION 26

DX COIL SCHEDULE

MARK	CALCULATED COOLING LOAD		EVAPORATOR ENT. CONDITIONS				REMARKS
	TOTAL BTU/H	SENSIBLE BTU/H	DB °F	WB °F	A.C.F.M / S.C.F.M.	MAX. PR. DR. IN. W.G.	
CC-1a	32,525	32,525	82.5	63.6	1575/1336	0.24	SEE NOTES 1,2,3,4
CC-1b	32,525	32,525	82.5	63.6	1575/1336	0.24	SEE NOTES 1,2,3,4
CC-1c	32,525	32,525	82.5	63.6	1575/1336	0.24	SEE NOTES 1,2,3,4
CC-1d	32,525	32,525	82.5	63.6	1575/1336	0.24	SEE NOTES 1,2,3,4
CC-2a	41,750	41,750	86.9	63.4	1800/1526	0.26	SEE NOTES 1,2,3,4
CC-2b	41,750	41,750	86.9	63.4	1800/1526	0.26	SEE NOTES 1,2,3,4
CC-3	44,800	44,800	87.1	63.7	1800/1526	0.26	SEE NOTES 1,2,3,4
CC-4	25,700	25,700	83.0	61.9	1350/1144	0.23	SEE NOTES 1,2,3,4
CC-5	23,100	23,100	82.7	61.9	1125/954	0.28	SEE NOTES 1,2,3,4
CC-6	22,000	22,000	82.6	61.9	1125/954	0.28	SEE NOTES 1,2,3,4
CC-7	38,300	38,300	83.3	61.7	1575/1336	0.29	SEE NOTES 1,2,3,4
CC-8	30,300	30,300	81.8	60.7	1350/1144	0.23	SEE NOTES 1,2,3,4
CC-9	35,400	35,400	84.1	61.9	1575/1336	0.29	SEE NOTES 1,2,3,4
CC-10	40,200	40,200	85.6	63.4	1575/1336	0.22	SEE NOTES 1,2,3,4
CC-11	39,600	39,600	86.5	63.2	1575/1336	0.22	SEE NOTES 1,2,3,4
CC-12	47,000	47,000	86.2	63.3	1800/1526	0.26	SEE NOTES 1,2,3,4
CC-13	24,700	24,700	81.6	60.4	1350/1144	0.23	SEE NOTES 1,2,3,4

1. COMPLETE WITH FACTORY COIL BOX AND COIL
2. WET COIL
3. 4500 FEET ELEVATION (0.848 CFM TRANSMISSION FACTOR)
4. SEE SPECIFICATION FOR APPROVED MANUFACTURERS

ELECTRIC WALL HEATER SCHEDULE

MARK	SERVES	KW OUTPUT	Ø	HERTZ	VOLTS	AMPS	REMARKS
EH-1	FIRE RISER [129]	2.2	1	60	208	10.0	QMARK QFG22281F W/O BUILT IN TSTAT

DESIGN CONDITIONS	OUTSIDE	INSIDE
WINTER	9.3°F	70°F
SUMMER	94.8°F DB, 62.6°F WB	75°F DB, 64°F WB

GENERAL NOTES:

1. THE MECHANICAL CONTRACTOR SHALL VERIFY MOTOR VOLTAGES WITH THE ELECTRICAL DRAWINGS BEFORE ORDERING MOTORIZED EQUIPMENT AND CONTROLS. MOTOR NAME PLATE VOLTAGE SHALL BE NEMA STANDARD 200 VOLT FOR 208 VOLT THREE PHASE SYSTEM AND SHALL BE NEMA STANDARD 230 VOLT FOR 240 VOLT THREE PHASE OR SINGLE PHASE SYSTEM. STARTER HEATERS INSTALLED SHALL BE COORDINATED WITH THE NAME PLATE DATA.
2. S.C.F.M. LISTED IS STANDARD AIR. A.F.C.M. LISTED IS ACTUAL AIR AT ELEVATION NOTED.

REGISTERED PROFESSIONAL ENGINEER — DAVID L. HANSEN — Aug 15, 2024 — STATE OF UTAH

Engineered Systems Associates
1355 EAST CENTER
POCATELLO, IDAHO 83201
PHONE: (208) 233-0501
FAX: (208) 233-0529
EMAIL: esa@engsystems.com
ESA JOB NUMBER: 24066

bhd ARCHITECTS
www.bhdarchitects.com
Phone 801.571.0010
Fax 801.571.0303
Toll Free 888.571.0010
65 East Wadsworth Park Drive
Suite 205 Draper, Utah 84020

THE CHURCH OF JESUS CHRIST OF LATTER-DAY SAINTS

Springwater 9
Vineyard UT Springwater Stake

Approx. 542 South Geneva Road
Vineyard, Utah 84059

Owner #: 502-2004
Plan Series: G300-MH-11
County Parcel: 39-228-0001
BHD #: 2346
Date: 15 Aug 2024

Drawing Issue and Revision Schedule

#	Date	Description

MECHANICAL SCHEDULES

M601

8/14/2024 5:25:25 PM

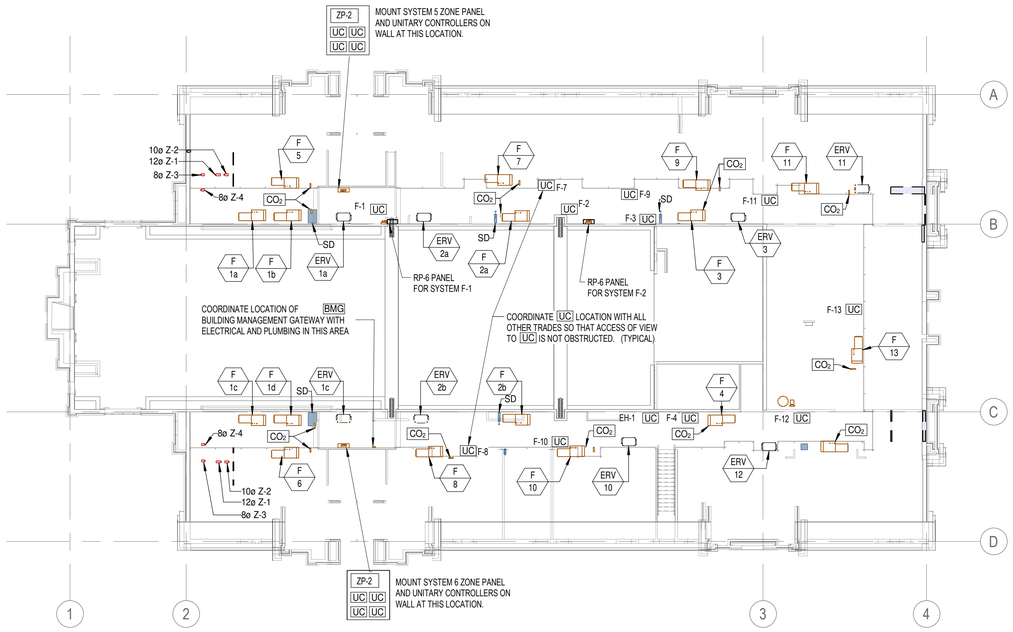

2 EQUIPMENT PLATFORM AUTOMATIC TEMPERATURE CONTROL PLAN

SCALE: 1/16" = 1'-0"



1 MAIN FLOOR AUTOMATIC TEMPERATURE CONTROL PLAN

SCALE: 1/16" = 1'-0"

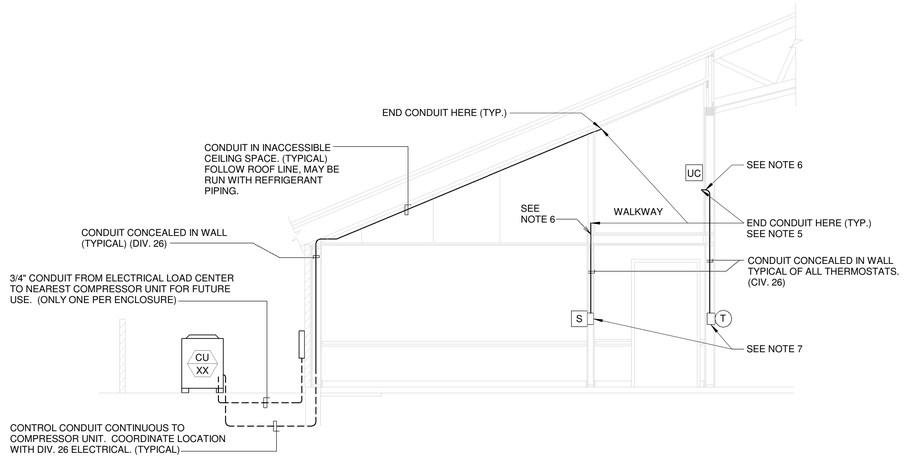

A MINIMUM REQUIRED CONDUIT-TYPICAL DETAIL

SCALE: NONE

NOTE:
ALL TEMPERATURE CONTROL CONDUIT SHALL BE FURNISHED AND INSTALLED BY DIVISION 26.

SYMBOLS

UC	UNITARY CONTROLLER (DIV 23). MOUNT MODULE IN ACCESSIBLE LOCATION ON OR NEAR ASSOCIATED FURNACE.
RP-6	RELAY PANEL (DIV 23) MOUNT 5'-0" TO BOTTOM OF CABINET
T	THERMOSTAT (LCBS) OUTLET (DIV 26)
S	INDOOR AIR SENSOR OUTLET (DIV 26)
BMG	BUILDING MANAGEMENT GATEWAY (DIV 23)
OAS	GLOBAL OUTDOOR AIR SENSOR (DIV 23) TO BE INSTALLED ON THE NORTH SIDE OF THE BUILDING (OUT OF DIRECT SUNLIGHT) AND CONNECTED TO ANY ZONE.
CO_2	CO_2 SENSOR (DIV 23) INSTALL UPSTREAM OF RELIEF OR OUTSIDE AIR CONNECTON.
CRO	COMBINATION RELAY AND THERMAL OVERLOAD DISCONNECT (W/20 AMP RIB RELAY 2401B)
ZP-1	3 ZONE PANEL (DIV 23)
ZP-2	4 ZONE PANEL (DIV 23)
Z*	ZONE DAMPER (*=ZONE NUMBER)
SD	DUCT SMOKE DETECTOR

NOTES:

1. BOXES FOR THERMOSTAT (T) AND [S] OUTLETS SHALL BE 2"X4" WITH LONG DIMENSION VERTICAL. USE METAL BRACKET OF COVER PLATE ASSEMBLY TO MOUNT THERMOSTAT HORIZONTAL.
2. CONDUIT TO BE 1/2" UNLESS NOTED OTHERWISE.
3. TEMPERATURE CONTROL WIRING THAT IS NOT IN CONDUIT SHALL BE RUN PARALLEL AND PERPENDICULAR TO BUILDING CONSTRUCTION LINES. SEE SPECIFICATIONS FOR ACCEPTABLE FASTENING METHODS AND MAXIMUM ALLOWABLE SPACING BETWEEN FASTENERS.
4. TEMPERATURE CONTROL WIRING THAT IS NOT IN CONDUIT SHALL BE LABELED. PROVIDE A LABEL AT ALL POINTS WHERE TEMPERATURE CONTROL WIRING ENTERS CONDUIT AND AT CONNECTIONS TO DEVICES.
5. SEAL OPEN END OF CONDUIT AIR-TIGHT AROUND THERMOSTAT/SENSOR WIRE WITH SEALANT COMPOUND. SEE SPECS FOR APPROVED PRODUCT.
6. SEAL ANNULAR SPACE BETWEEN CONDUIT AND OPENING IN FLOOR OR WALL WITH SEALANT COMPOUND. SEE SPECS FOR APPROVED PRODUCT.
7. SEAL OPEN END OF CONDUIT AT J-BOX AIR-TIGHT AROUND THERMOSTAT/SENSOR WIRE. SEAL ALL AIR GAPS AROUND J-BOX TO ISOLATE J-BOX FROM WALL CAVITY. SEAL BACK OF THERMOSTAT AROUND WIRES. PACK J-BOX TIGHT WITH GLASS FIBER BAT INSULATION. USE SEALING COMPOUND SPECIFICALLY MADE FOR REFRIGERATION AND AIR-CONDITIONING APPLICATIONS. SEE SPECIFICATIONS FOR APPROVED PRODUCTS.
8. ELECTRIC HEATER ZONE. CONNECT UC TO 20 AMP RELAY AND THEN TO THERMAL OVERLOAD. REFER TO WIRING DIAGRAM, SHEE T ME701.

bhd ARCHITECTS
www.bhdarchitects.com
Phone 801.571.0010
Fax 801.571.0303
Toll Free 888.571.0010
65 East Wadsworth Park Drive
Suite 205 Draper, Utah 84020

THE CHURCH OF JESUS CHRIST OF LATTER-DAY SAINTS

Springwater 9
Vineyard UT Springwater Stake

Approx. 542 South Geneva Road
Vineyard, Utah 84059

Owner #: 502-2004
Plan Series: G300-MH-11
County Parcel: 39-228:0001
BHD #: 2346
Date: 15 Aug 2024

Drawing Issue and Revision Schedule

#	Date	Description

AUTOMATIC TEMPERATURE CONTROL PLANS

ME101

Engineered Systems Associates
1355 EAST CENTER
POCATELLO, IDAHO 83201
PHONE: (208) 233-0501
FAX: (208) 233-0529
EMAIL: esa@engsystems.com
ESA JOB NUMBER: 24066

REGISTERED PROFESSIONAL ENGINEER
DAVID L. HANSEN
Aug 15, 2024
STATE OF UTAH

8/14/2024 5:25:28 PM

LEGEND:

DIVISION 26 OR FACTORY PRE-WIRED

DIVISION 23 WIRING

NOTES:

1. ECHELON BUS (E-BUS) MUST BE INSTALLED AT LEAST 12" AWAY FROM ALL ELECTRICAL DEVICES: I.E. MOTORS, LIGHT, ETC.
2. DO NOT USE THERMOSTAT CABLE AS NETWORK CABLE. USE SPECIFIED CABLE.

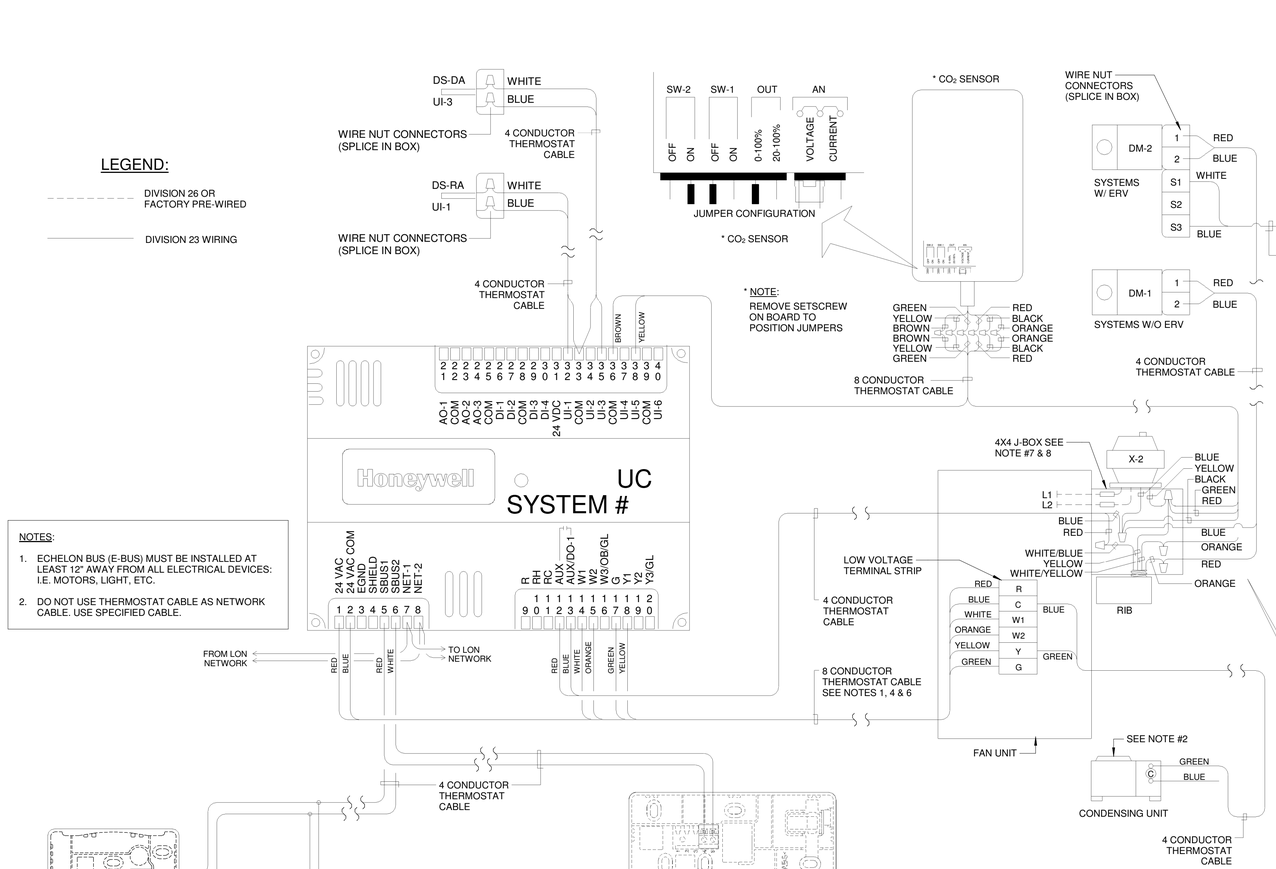

WIRING DIAGRAM

SYSTEMS: F-3, F-4, F-7, F-8, F-9, F-10, F-11, F-12, & F-13

SYSTEMS: F-3, F-4, F-11 & F-12

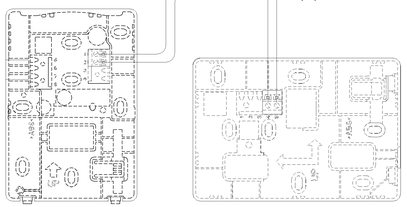

S T

SYSTEMS: F-7, F-8, F-9, F-10 & F-13

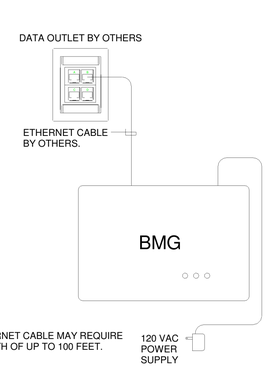

NOTES:

1. ETHERNET CABLE MAY REQUIRE LENGTH OF UP TO 100 FEET.

BMG WIRING DIAGRAM

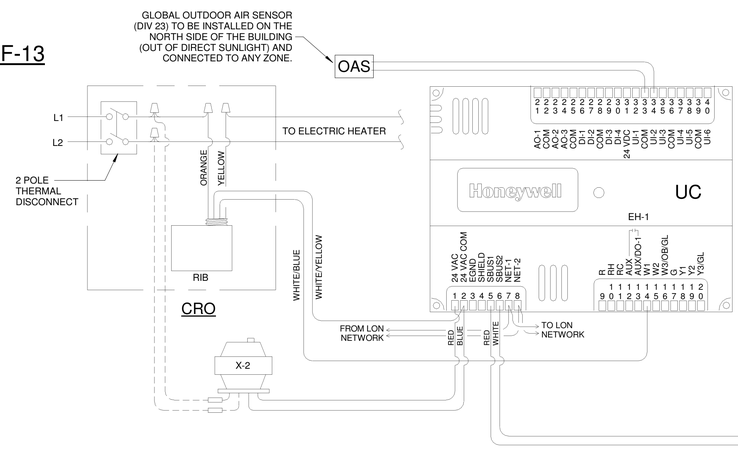

NOTES:

1. REFER TO NOTE 8 ON SHEET ME101.

ELECTRIC HEATER WIRING DIAGRAM

T

SYSTEM: EH-1

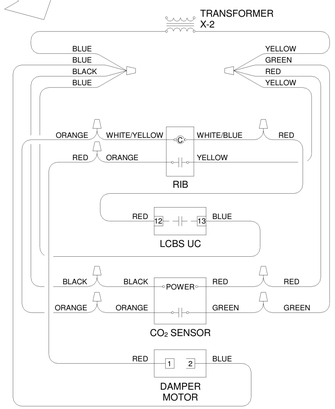

WIRING SCHEMATIC, X-2

ENERGY RECOVERY VENTILATOR WIRING

A

SYSTEMS: F-1, F-2, F-3, F-9, F-10, & F-11

NOTES:

1. THERMOSTAT CABLE- 4, 8 OR 12 CONDUCTOR- 18 AWG SOLID COPPER WIRE INSULATED WITH HIGH DENSITY POLYETHYLENE. CONDUCTORS PARALLEL. ENCLOSED IN BROWN PVC JACKET. (NO 22 AWG CABLE ALLOWED).
2. IF COMPRESSOR UNITS HAVE THEIR OWN POWER SUPPLY IT MAY BE NECESSARY TO ADD ADDITIONAL RELAYS IN COMPRESSOR UNIT TO PROPERLY INTERFACE CONTROLS.
3. USE WIRE NUT CONNECTORS FOR SPLICING CONDUCTORS IN SPECIFIED LOCATIONS, AND TYTON TYPE CRIMP CONNECTORS FOR TERMINAL CONNECTIONS. NO TERMINAL CONNECTORS REQUIRED AT THERMOSTAT OR SENSOR.
4. DO NOT RUN ANY OTHER WIRING IN THIS CONDUIT EXCEPT THERMOSTAT CABLE.
5. VERIFY THAT FAN UNIT FAN SPEED CONTROL WIRING IS SET TO MATCH SCHEDULE SHEET AND THAT FAN OPERATES AT COOLING SPEED ONLY.
6. DO NOT SPLICE WIRE IN RUNS FROM SENSOR TO THERMOSTAT, THERMOSTAT TO FURNACE, AND THERMOSTAT TO DISCHARGE AIR SENSOR.
7. PROVIDE CHASE NIPPLE WITH PLASTIC BUSHING WHEN ATTACHING J-BOX TO EQUIPMENT.
8. PROVIDE CABLE-CLAMP SO THAT CABLES CANNOT BE PULLED OUT OF J-BOX.

CONTROL EQUIPMENT

MARK	DESCRIPTION	CAT. NO. (1)	MARK	DESCRIPTION	CAT. NO. (1)
BMG	BUILDING MANAGEMENT GATEWAY	LGW1000 (GATEWAY) WPM-8000 (WALL PLUG)	RP-6	RELAY PANEL 24X18X6W/COVER	(2) (4)
UC	UNITARY CONTROLLER	YCRL64385R1000	DM-1	DAMPER MOTOR TWO POSITION	MS8105A1030
T	THERMOSTAT WALL MODULE	LCBS WALL MODULE	DM-2	DAMPER MOTOR 2 POS W/END SWITCH	MS8105A1130
	THERMOSTAT COVER PLATE ASSEMBLY	50002883-001	X-1	TRANSFORMER 120, 208, 240V/24V 75VA	AT175F1023
S	REMOTE SENSOR	TR40	X-2	TRANSFORMER 120V/24V 50VA	AT150F1022
G-1	THERMOSTAT GUARD	(2)	SD-1	DUCT SMOKE DETECTOR	(2)
DS	DUCT AIR SENSOR	C7041B2005	SR	SMOKE RELAY 30 AMP 120V COIL	DP2030B5003 (3)
CO_2	CO_2 SENSOR	C7232B1006	RIB	TWO POLE RELAY	RIBU1C (2)
ZP-1	ZONING PANEL (3 ZONES)	HZ322	RIB 20A	TWO POLE RELAY 20 AMP	RIB2401B (6)
ZP-2	ZONING PANEL (4 ZONES)	HZ432	OAS	GLOBAL OUTDOOR AIR SENSOR	C7041F2006 (7)
Z*	ZONE DAMPER (*=ZONE NUMBER)	ZD or ARD (5)	CRO	COMBINATION RELAY & THERMAL OVERLOAD DISCONNECT	(2) (4)
			E-BUS	ECHELON NETWORK CABLE	W221P-2001B

(1) ALL CATALOG NUMBERS SHOWN ARE HONEYWELL UNLESS NOTED OTHERWISE.
(2) SEE SPECIFICATIONS
(3) PROVIDE ENCLOSURE
(4) TO BE PURCHASED FROM AN APPROVED PER-BUILT PANEL BUILDER SEE SPECIFICATION.
(5) SEE PLAN FOR REQUIRED SIZE AND ZONE NUMBER.
(6) USE WITH CRO DISCONNECTFOR ELECTRIC WALL HEATER. CONTROL FROM UC.
(7) ONLY ONE REQUIRED FOR BUILDING. MAY BE CONNECTED TO ANY CONTROLLER AT NORTH SIDE.

bhd ARCHITECTS
www.bhdarchitects.com
Phone 801.571.0010
Fax 801.571.0303
Toll Free 888.571.0010
65 East Wadsworth Park Drive
Suite 205 Draper, Utah 84020

THE CHURCH OF JESUS CHRIST OF LATTER-DAY SAINTS

Springwater 9
Vineyard UT Springwater Stake

Approx. 542 South Geneva Road
Vineyard, Utah 84059

Owner #: 502-2004
Plan Series: G300-MH-11
County Parcel: 39-228-0001
BHD #: 2346
Date: 15 Aug 2024

Drawing Issue and Revision Schedule

#	Date	Description

AUTOMATIC TEMPERATURE CONTROL WIRING AND SCHEDULES

ME701

Engineered Systems Associates
1355 EAST CENTER
POCATELLO, IDAHO 83201
PHONE: (208) 233-0501
FAX: (208) 233-0529
EMAIL: esa@engsystems.com
ESA JOB NUMBER: 24066

REGISTERED PROFESSIONAL ENGINEER STATE OF UTAH DAVID L. HANSEN Aug 15, 2024

8/14/2024 5:25:29 PM

LEGEND:

DIVISION 26 OR FACTORY PRE-WIRED

DIVISION 23 WIRING

NOTES:

FOR NOTES SEE SHEET ME701

3- #12 BLACK/WHITE/GREEN

GREEN/BLUE

RED/GREEN

SEE NOTE #2

COMPRESSOR UNIT

4 CONDUCTOR THERMOSTAT CABLE

X-2

BLACK

WHITE

L1

L2

DM-2

1

2

S1

S2

S3

4X4 J BOX SEE NOTE #7

BLACK

BROWN

RED

BLUE

WHITE

GREEN

YELLOW

GREEN

R

C

W

Y

G

FAN UNIT "a"

120V 1PHZ 60HZ

H

N

SWITCH BY DIV 26

SMOKE DETECTOR

10 A

SD-1

120 VAC

120 VAC

AUX.

ALARM

12 13 15 16

NC

NO

#12

BLACK

WHITE

SR

FAN UNIT DOOR SWITCH

AUX. J-BOX FURNISHED IN FAN UNIT

BLACK #12

WHITE

BLUE

ERV "A"

ENERGY RECOVERY VENTILATOR. SEE DETAIL A/ME701 FOR WIRING CONNECTIONS,

PART OF 8 CONDUCTOR THERMOSTAT CABLE

8 CONDUCTOR THERMOSTAT CABLE

PART OF 8 CONDUCTOR THERMOSTAT CABLE

DS-DA

UI-3

WHITE

BLUE

WIRE NUT CONNECTORS (SPLICE IN BOX)

4 CONDUCTOR THERMOSTAT CABLE

DS-RA

UI-1

WHITE

BLUE

WIRE NUT CONNECTORS (SPLICE IN BOX)

4 CONDUCTOR THERMOSTAT CABLE

BROWN

YELLOW

2 2 2 2 2 2 2 2 3 3 3 3 3 3 3 3 4 4
1 2 3 4 5 6 7 8 9 0 1 2 3 4 5 6 7 8 9 0

AO-1 COM AO-2 AO-3 COM DI-1 DI-2 COM DI-3 DI-4 24 VDC UI-1 COM UI-2 UI-3 COM UI-4 UI-5 COM UI-6

Honeywell

UC SYSTEM #

24 VAC
24 VAC COM
EGND
SHIELD
SBUS1
SBUS2
NET-1
NET-2

1 2 3 4 5 6 7 8

R
RH
RC
AUX
AUX/DO-1
W1
W2
W3/OB/GL
G
Y1
Y2
Y3/GL

1 1 1 1 1 1 1 1 1 1 1 1 1 2
9 0 1 2 3 4 5 6 7 8 9 0

FROM LON NETWORK

RED
BLUE

TO LON NETWORK

RED
WHITE

TAN
WHITE
ORANGE
GREEN
YELLOW
PINK

4 CONDUCTOR THERMOSTAT CABLE

12 CONDUCTOR THERMOSTAT CABLE SEE NOTES 1, 4 AND 6.

T

TB1

SPACE
L1
N
GND
R1
R1
R1
R1
G
X
SPACE
R3
R3
W1
X
SPACE
R5
R5
Y1
X
SPACE

BLACK
WHITE
GREEN
RED
GREEN
RED
GREEN
RED
GREEN
GREEN
WHITE
WHITE
YELLOW
YELLOW

FAN UNIT "a"
FAN UNIT "b"
FAN UNIT "c"
FAN UNIT "d"
FAN UNIT "a"
FAN UNIT "d"
FAN UNIT "a"
FAN UNIT "d"

X-1

FAN R1

DAMPER R2

HEAT 1 R3

HEAT 2 R4

COOL 1 R5

COOL 2 R6

PANEL RP-6

TB2

SPACE
R
X
GND
R2
R2
R2
R2
A2
X
SPACE
R4
R4
W2
X
SPACE
R6
R6
Y2
X
G+
GO
NO
COM
SPACE

FAN UNIT "a"
FAN UNIT "b"
FAN UNIT "c"
FAN UNIT "d"
FAN UNIT "b"
FAN UNIT "c"

RED
BLUE
BLACK
BROWN
BLACK
BROWN
TAN
WHITE
WHITE
GREY
YELLOW
YELLOW
PINK
RED
BLACK
ORANGE
GREEN

8 CONDUCTOR THERMOSTAT CABLE

SW-2 SW-1 OUT AN

OFF ON OFF ON 0-100% 20-100% VOLTAGE CURRENT

JUMPER CONFIGURATION

* CO_2 SENSOR

* CO_2 SENSOR

* NOTE:
REMOVE SETSCREW ON BOARD TO POSITION JUMPERS

GREEN YELLOW BROWN BROWN YELLOW GREEN

RED BLACK ORANGE ORANGE BLACK RED

GREEN/BLUE

RED/GREEN

SEE NOTE #2

COMPRESSOR UNIT

4 CONDUCTOR THERMOSTAT CABLE

X-2

BLACK

WHITE

L1

L2

DM-2

1

2

S1

S2

S3

4X4 J BOX SEE NOTE #7

BLACK

BROWN

RED

BLUE

WHITE

GREEN

YELLOW

GREEN

R

C

W

Y

G

FAN UNIT "c"

120V 1PHZ 60HZ

H

N

SWITCH BY DIV 26

SMOKE DETECTOR

10 A

SD-1

120 VAC

120 VAC

AUX.

ALARM

12 13 15 16

NC

NO

#12

BLACK

WHITE

SR

AUX. J-BOX FURNISHED IN FAN UNIT

FAN UNIT DOOR SWITCH

BLACK #12

WHITE

BLUE

ERV "C"

ENERGY RECOVERY VENTILATOR. SEE DETAIL A/ME701 FOR WIRING CONNECTIONS.

8 CONDUCTOR THERMOSTAT CABLE

GREEN/BLUE

L1

L2

4 CONDUCTOR THERMOSTAT CABLE

4X4 J BOX SEE NOTE #7

RED

BLUE

WHITE

GREEN

YELLOW

GREEN

R

C

W

Y

G

COMPRESSOR UNIT SEE NOTE #2

FAN UNIT "d"

120V 1PHZ 60HZ

H

N

SWITCH BY DIV 26

BLACK

WHITE

BLACK #12

FAN UNIT DOOR SWITCH

AUX. J-BOX FURNISHED IN FAN UNIT

AUX. J-BOX FURNISHED IN FAN UNIT

WIRING DIAGRAM

SYSTEMS: F-1

8/14/2024 5:25:30 PM

bhd ARCHITECTS
www.bhdarchitects.com
Phone 801.571.0010
Fax 801.571.0303
Toll Free 888.571.0010
65 East Wadsworth Park Drive
Suite 205 Draper, Utah 84020

THE CHURCH OF JESUS CHRIST OF LATTER-DAY SAINTS

Springwater 9
Vineyard UT Springwater Stake

Approx. 542 South Geneva Road
Vineyard, Utah 84059

Owner #: 502-2004
Plan Series: G300-MH-11
County Parcel: 39-228:0001
BHD #: 2346
Date: 15 Aug 2024

Drawing Issue and Revision Schedule

#	Date	Description

AUTOMATIC TEMPERATURE CONTROL WIRING

ME702

Engineered Systems Associates
1355 EAST CENTER
POCATELLO, IDAHO 83201
PHONE: (208) 233-0501
FAX: (208) 233-0529
EMAIL: esa@engsystems.com
ESA JOB NUMBER: 24066

LICENSED PROFESSIONAL ENGINEER
DAVID L. HANSEN
Aug 15, 2024
STATE OF UTAH

LEGEND:

DIVISION 26 OR FACTORY PRE-WIRED

DIVISION 23 WIRING

NOTES:

FOR NOTES SEE SHEET ME701

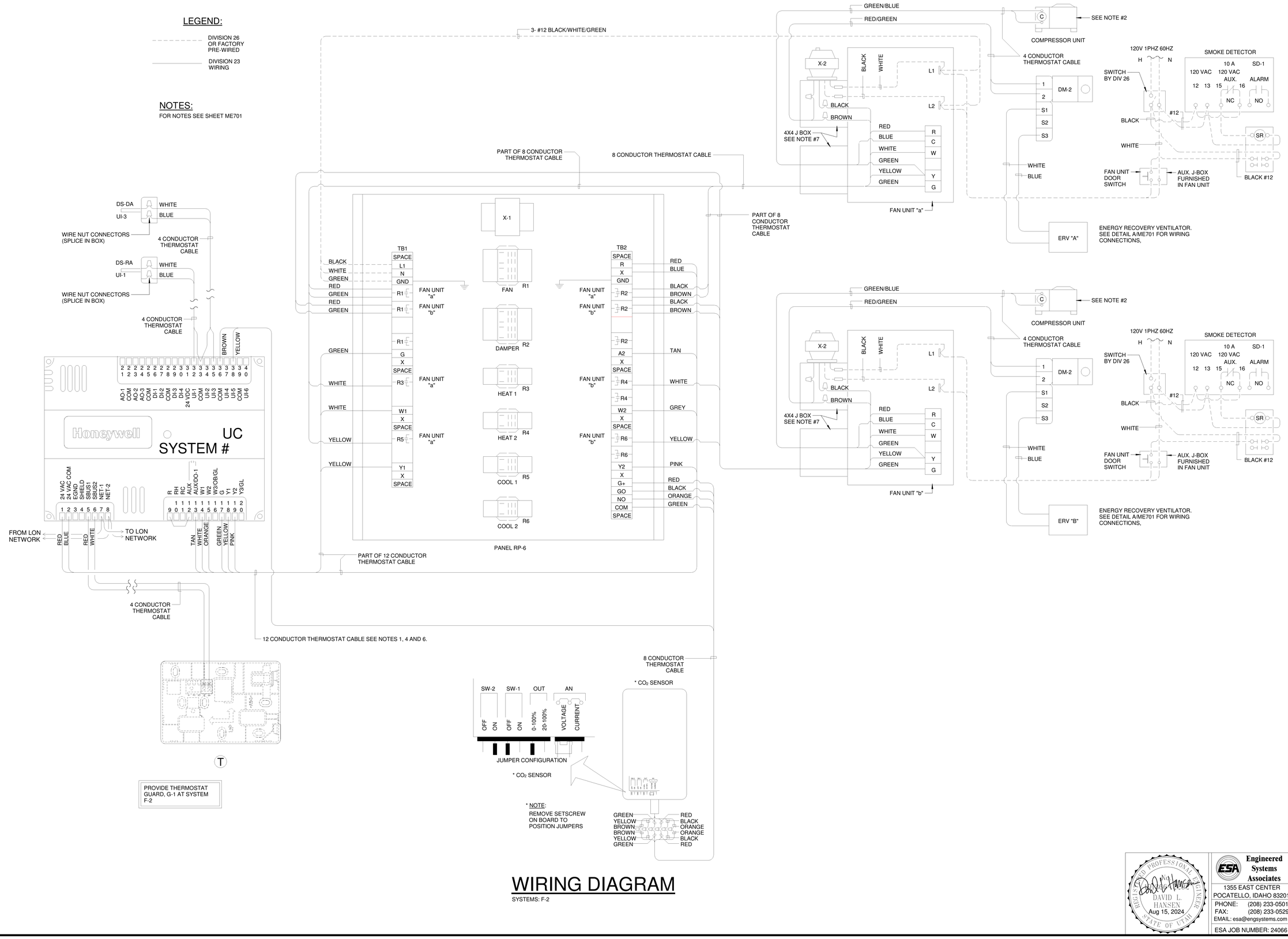

WIRING DIAGRAM

SYSTEMS: F-2

bhd ARCHITECTS
www.bhdarchitects.com
Phone 801.571.0010
Fax 801.571.0303
Toll Free 888.571.0010
65 East Wadsworth Park Drive
Suite 205 Draper, Utah 84020

THE CHURCH OF JESUS CHRIST OF LATTER-DAY SAINTS

Springwater 9
Vineyard UT Springwater Stake

Approx. 542 South Geneva Road
Vineyard, Utah 84059

BHD #: 2346
County Parcel: 39-228:0001
Plan Series: G300-MH-11
Owner #: 502-2004
Date: 15 Aug 2024

Drawing Issue and Revision Schedule

#	Date	Description

AUTOMATIC TEMPERATURE CONTROL WIRING

ME703

LICENSED PROFESSIONAL ENGINEER
DAVID L. HANSEN
Aug 15, 2024
STATE OF UTAH

Engineered Systems Associates
1355 EAST CENTER
POCATELLO, IDAHO 83201
PHONE: (208) 233-0501
FAX: (208) 233-0529
EMAIL: esa@engsystems.com

ESA JOB NUMBER: 24066

8/14/2024 5:25:32 PM

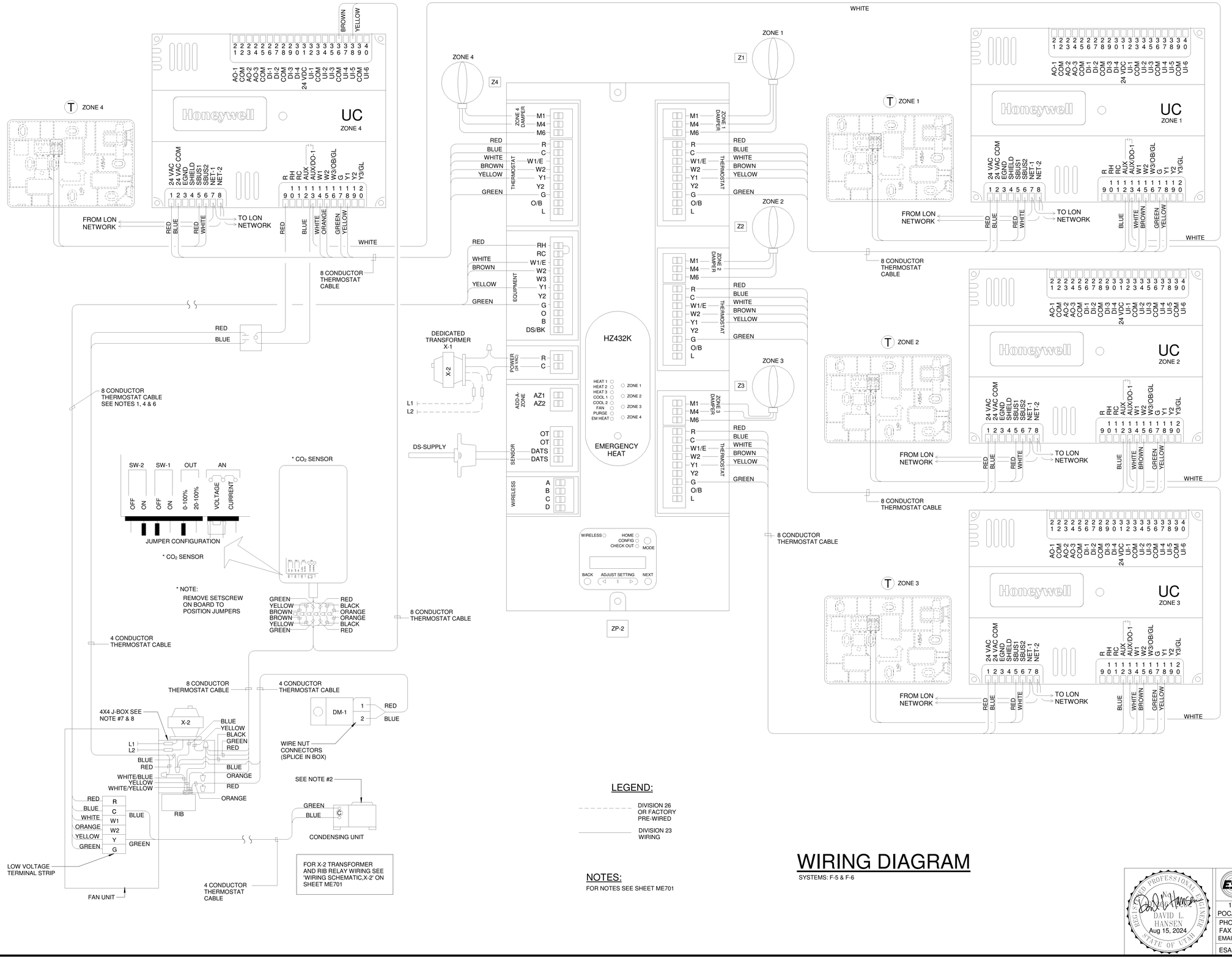

WIRING DIAGRAM

SYSTEMS: F-5 & F-6

bhd ARCHITECTS
www.bhdarchitects.com
Phone 801.571.0010
Fax 801.571.0303
Toll Free 888.571.0010
65 East Wadsworth Park Drive
Suite 205 Draper, Utah 84020

THE CHURCH OF JESUS CHRIST OF LATTER-DAY SAINTS

Springwater 9
Vineyard UT Springwater Stake

Approx. 542 South Geneva Road
Vineyard, Utah 84059

Owner #: 502-2004
Plan Series: G300-MH-11
County Parcel: 39-228:0001
BHD #: 2346
Date: 15 Aug 2024

Drawing Issue and Revision Schedule

#	Date	Description

Engineered Systems Associates
1355 EAST CENTER
POCATELLO, IDAHO 83201
PHONE: (208) 233-0501
FAX: (208) 233-0529
EMAIL: esa@engsystems.com
ESA JOB NUMBER: 24066

REGISTERED PROFESSIONAL ENGINEER — DAVID L. HANSEN — Aug 15, 2024 — STATE OF UTAH

AUTOMATIC TEMPERATURE CONTROL WIRING

ME704

8/14/2024 5:25:34 PM

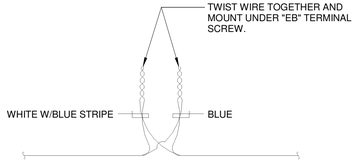

A E-BUS CONNECTION DETAIL
NO SCALE

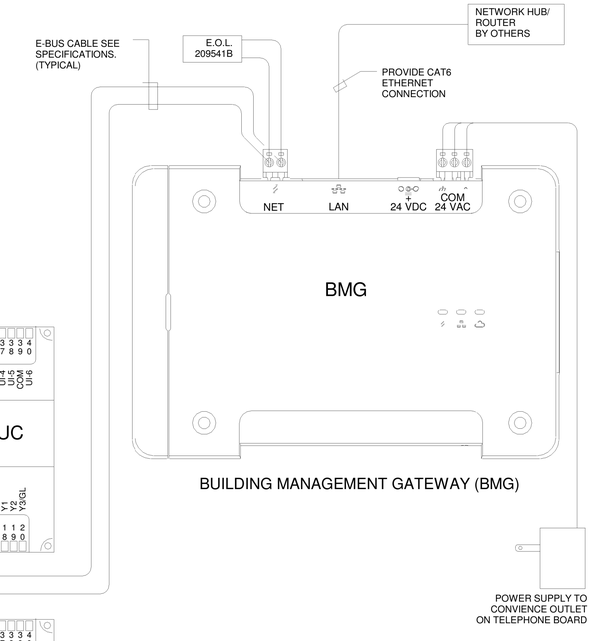

BUILDING MANAGEMENT GATEWAY (BMG)



SEE DETAIL A THIS SHEET (TYPICAL)

E.O.L. 209541B

E-BUS WIRING DIAGRAM

bhd ARCHITECTS
www.bhdarchitects.com
Phone 801.571.0010
Fax 801.571.0303
Toll Free 888.571.0010
65 East Wadsworth Park Drive
Suite 205 Draper, Utah 84020

THE CHURCH OF JESUS CHRIST OF LATTER-DAY SAINTS

Springwater 9
Vineyard UT Springwater Stake
Approx. 542 South Geneva Road
Vineyard, Utah 84059

BHD #: 2346
County Parcel: 39:228:0001
Plan Series: G300-MH-11
Owner #: 502-2004
Date: 15 Aug 2024

Drawing Issue and Revision Schedule

#	Date	Description

Engineered Systems Associates
1355 EAST CENTER
POCATELLO, IDAHO 83201
PHONE: (208) 233-0501
FAX: (208) 233-0529
EMAIL: esa@engsystems.com
ESA JOB NUMBER: 24066

LICENSED PROFESSIONAL ENGINEER
DAVID L. HANSEN
Aug 15, 2024
STATE OF UTAH

AUTOMATIC TEMPERATURE CONTROL WIRING

ME705

8/14/2024 5:25:37 PM

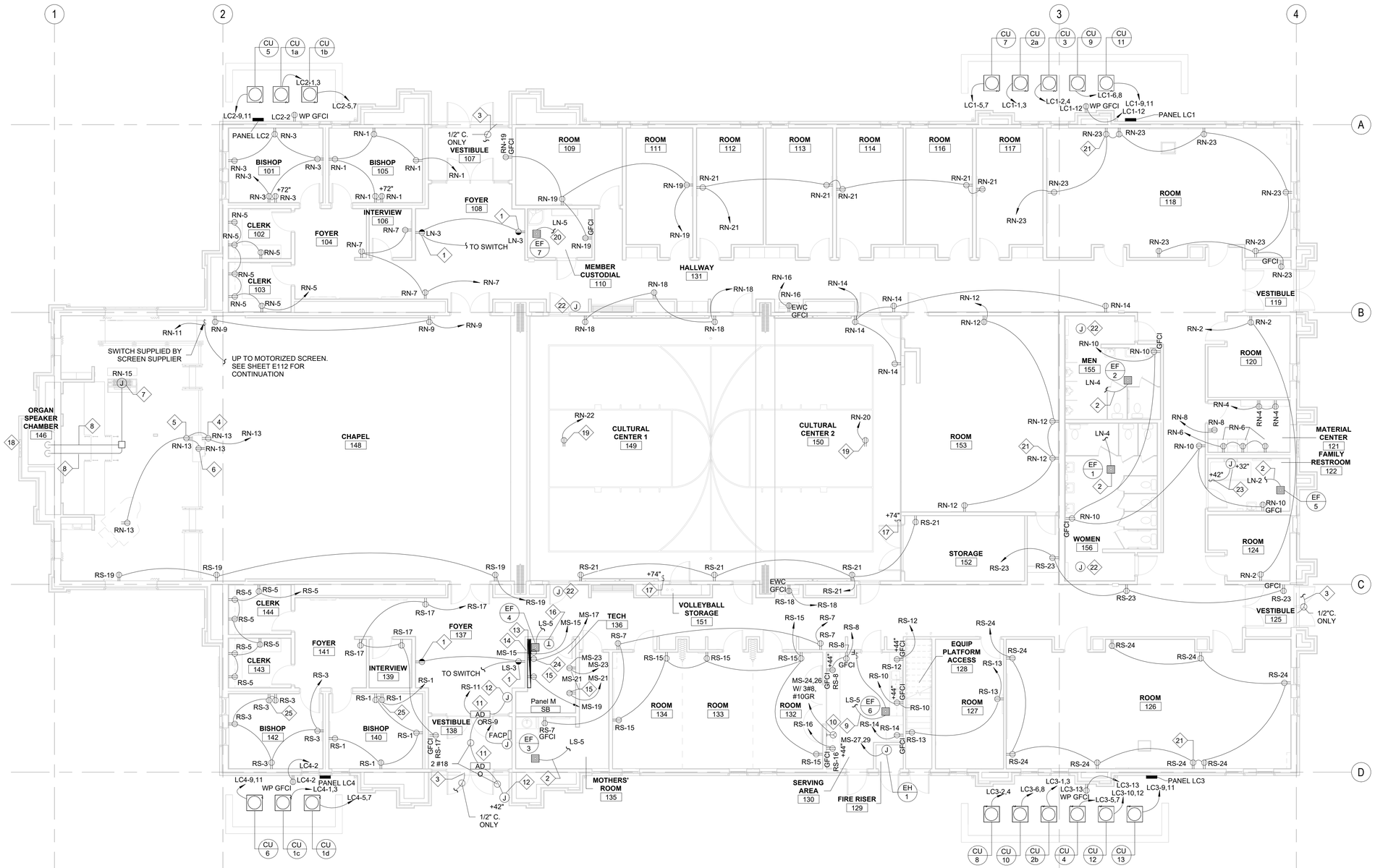

1 MAIN FLOOR POWER PLAN
1/8" = 1'-0"

GENERAL NOTES

1 SEE ME AND ET SHEETS FOR REQUIRED RACEWAY AND BOXES FOR TEMPERATURE CONTROL, TELEPHONE, DATA, SOUND, VIDEO, SATELLITE AND TV SYSTEMS.

2 OUTLETS ON EXTERIOR WALLS MUST BE PROVIDED WITH AIR TIGHT J-BOXES. SEAL AROUND ALL PENETRATIONS TO KEEP THE BOX AIR TIGHT.

KEYED NOTES

1 SPLIT WIRE SO UPPER HALF OF RECEPTACLE IS CONTROLLED BY LIGHT SWITCH AND LOWER HALF IN UNSWITCHED ON SAME CIRCUIT.
2 CIRCUIT EXHAUST FAN WITH THE ROOM LIGHTS AND CONTROL WITH OCCUPANCY SENSOR IN ROOM.
3 STUB CONDUIT INTO DOOR HEAD FRAME FOR INSTALLATION OF ACCESS CONTROL SYSTEM WIRING. RUN CONDUIT TO ACCESSIBLE LOCATION IN UPPER MECHANICAL SPACE AND TERMINATE IN BOX LABELED 'ACCESS CONTROL'.
4 LOCATE BOX SO DUPLEX RECEPTACLE CAN BE MOUNTED HORIZONTALLY IN HARDWOOD BASE.
5 REFER TO J/A422 FOR MOUNTING OF DUPLEX RECEPTACLE AND DATA OUTLET ON SIDE OF PULPIT.
6 SEE 1/A401 FOR MOUNTING LOCATION OF RECEPTACLE IN PULPIT.
7 COORDINATE WITH ARCHITECTS DRAWING MOUNT RECEPTACLE ON THE VERTICAL WALL OF THE RECESSED ORGAN BOX. REFER TO 1/A401.
8 (2) 1" CONDUITS FROM JUNCTION BOX TO UPPER SHELF IN ORGAN SPEAKER CHAMBER.
9 CIRCUIT EXHAUST FAN WITH LIGHTS IN THIS ROOM AND CONTROL WITH MANUAL TIMER SWITCH.
10 LOCATE OUTLET SO RANGE WILL SIT TIGHT AGAINST WALL. WIRING TO RANGE TO BE 3#8,#10GR.
11 AUTOMATIC DOOR OPERATOR. COORDINATE CONDUIT AND CONDUCTOR LENGTHS AND ROUTING FOR COMPLETE, CONCEALED INSTALLATION.
12 PROVIDE A 4" SQUARE 2-1/8" DEEP BOX FOR AUTOMATIC DOOR ACTIVATING SWITCH. LEAVE EXTRA CONDUCTOR LENGTH FOR CONNECTION.
13 SEPARATE DEDICATED #6 GROUND. COORDINATE WITH TELECOMMUNICATIONS GROUND BUS BAR.
14 INSTALL DUPLEX RECEPTACLE AT TELEPHONE BOARD AT 48" AFF. REFER TO A/V DRAWINGS.
15 COORDINATE LOCATION OF DEVICES WITH DIVISION 27 PRIOR TO ROUGH-IN.
16 LINE VOLTAGE THERMOSTAT PROVIDED BY DIVISION 23 AND INSTALLED BY DIVISION 26.
17 CONTROL SWITCH PROVIDED BY BASKETBALL STANDARD MANUFACTURER.
18 PROVIDE LIGHTNING PROTECTION TO STEEPLE. SEE SPECIFICATIONS.
19 LOCATE OUTLET WITHIN FOUR FEET OF MOTOR FOR BASKETBALL STANDARD. MAKE RECEPTACLE CONNECTIONS FOR BASKETBALL STANDARD PER MANUFACTURER REQUIREMENTS.
20 CIRCUIT EXHAUST FAN WITH LIGHTS IN THIS ROOM AND CONTROL WITH INTERVAL TIMER SWITCH.
21 OUTLET MOUNTED IN THE AV JUNCTION BOX FOR TV MONITOR. COORDINATE LOCATION WITH AV INSTALLER.
22 PROVIDE 4" SQUARE BOX WITH SINGLE GANG MUD RING WITH 0.5" ENT CONDUIT TO THE EQUIPMENT PLATFORM (OVER WALKWAY). PROVIDE PULL STRING IN CONDUIT.
23 PROVIDE 0.5" CONDUIT FROM RECEPTACLE IN RESTROOM TO JUNCTION BOX FOR FUTURE EMERGENCY SWITCH LOCATION AND FROM FUTURE EMERGENCY SWITCH LOCATION TO JUNCTION BOX FOR POWER TO CHANGING STATION. SEE MANUFACTURER'S SHOP DRAWINGS FOR CONFIRMATION OF CONDUIT ROUTING. PROVIDE COVER PLATES FOR SWITCH AND JUNCTION BOX.
24 OUTLET FOR BMS SERVER.
25 OUTLET FOR TV MOUNTED NEXT TO DATA OUTLET FOR TV.

bhd ARCHITECTS
www.bhdarchitects.com
Phone 801.571.0010
Fax 801.571.0303
Toll Free 888.571.0010
65 East Wadsworth Park Drive
Suite 205 Draper, Utah 84020

LICENSED PROFESSIONAL ENGINEER
No. 5148728
DAVID G. HINCKLEY
8-15-24
STATE OF UTAH

SPECTRUM ENGINEERS
324 S. State St., Suite 400
Salt Lake City, UT 84111
800-678-7077
801-328-5151
fax: 801-328-5155
www.spectrum-engineers.com

THE CHURCH OF JESUS CHRIST OF LATTER-DAY SAINTS

Springwater 9
Vineyard UT Springwater Stake
Approx. 542 South Geneva Road
Vineyard, Utah 84059

Date:	15 Aug 2024
BHD #:	2346
County Parcel:	39-228:0001
Plan Series:	C300-MH-11
Owner #:	502-2004

Drawing Issue and Revision Schedule

#	Date	Description
1	15 Aug 2024	Bid Documents

MAIN FLOOR POWER PLAN

E101

Autodesk Docs://240510 - Orem Vineyard Springwater Granger 300 Meetinghouse/240510-Elec Central.rvt
8/15/2024 11:47:56 AM

KEYED NOTES

1. SEE C/A152 FOR MOUNTING OF COVE LIGHT FIXTURES.
2. COORDINATE LOCATION WITH EQUIPMENT AND PLUMBING.
3. SEE ME AND ET SHEETS FOR REQUIRED RACEWAY AND BOXES FOR TEMPERATURE CONTROL, TELEPHONE, DATA, SOUND, VIDEO, SATELLITE, AND TV SYSTEMS.
4. PROVIDE DUAL-LITE LG-250-S-I OR EQUAL. CIRCUIT MS-2 SHALL PASS THROUGH THIS INVERTER THEN SPLIT TO FEED EXTERIOR LIGHTING (WITH FIXTURES NOTED "TO INVERTER" TO BE FED FROM INVERTER THROUGH THE RELAY PANEL AND FIXTURES NOTED "TO RELAY PANEL" TO BE FED FROM THE RELAY PANEL AND NOT THE INVERTER.
5. VERIFY MECHANICAL EQUIPMENT AND LOCATIONS WITH MECHANICAL DRAWINGS.
6. REFER TO EQUIPMENT SCHEDULE ON SHEET E601 FOR MECHANICAL EQUIPMENT FEEDER INFORMATION.
7. PROVIDE 3-ZONE ROOM CONTROLLER CAPABLE OF RECEIVING DAYLIGHT PHOTOCELL, OCCUPANCY, AND MANUAL DIMMER SWITCH INPUTS. ALL ZONES SHALL SHUT OFF AUTOMATICALLY WHEN THERE IS NO OCCUPANCY IN THE ROOM. ZONE 1 SHALL BE CONTROLLED BY MANUAL DIMMER SWITCH. ZONE 2 SHALL BE CONTROLLED BY BOTH DAYLIGHT SENSOR AND MANUAL DIMMER SWITCH.
8. PROVIDE 1-ZONE ROOM CONTROLLER CAPABLE OF RECEIVING OCCUPANCY AND MANUAL DIMMER SWITCH INPUTS. ALL ZONES SHALL SHUT OFF AUTOMATICALLY WHEN THERE IS NO OCCUPANCY IN THE ROOM.
9. PROVIDE CONTRACTOR FURNISHED FIRE ALARM WIRELESS COMMUNICATOR (DSC 3G4010-CF) AND PROVIDE INTERCONNECT WIRING BACK TO FIRE ALARM PANEL.
10. SEE B/A152 FOR MOUNTING OF COVE LIGHT FIXTURES.
11. PROVIDE A 90 MINUTE REMOTE EMERGENCY LIGHTING UNIT FOR THIS FIXTURE. SEE POWER LAYOUT FOR REMOTE EMERGENCY LIGHTING UNIT LOCATION.

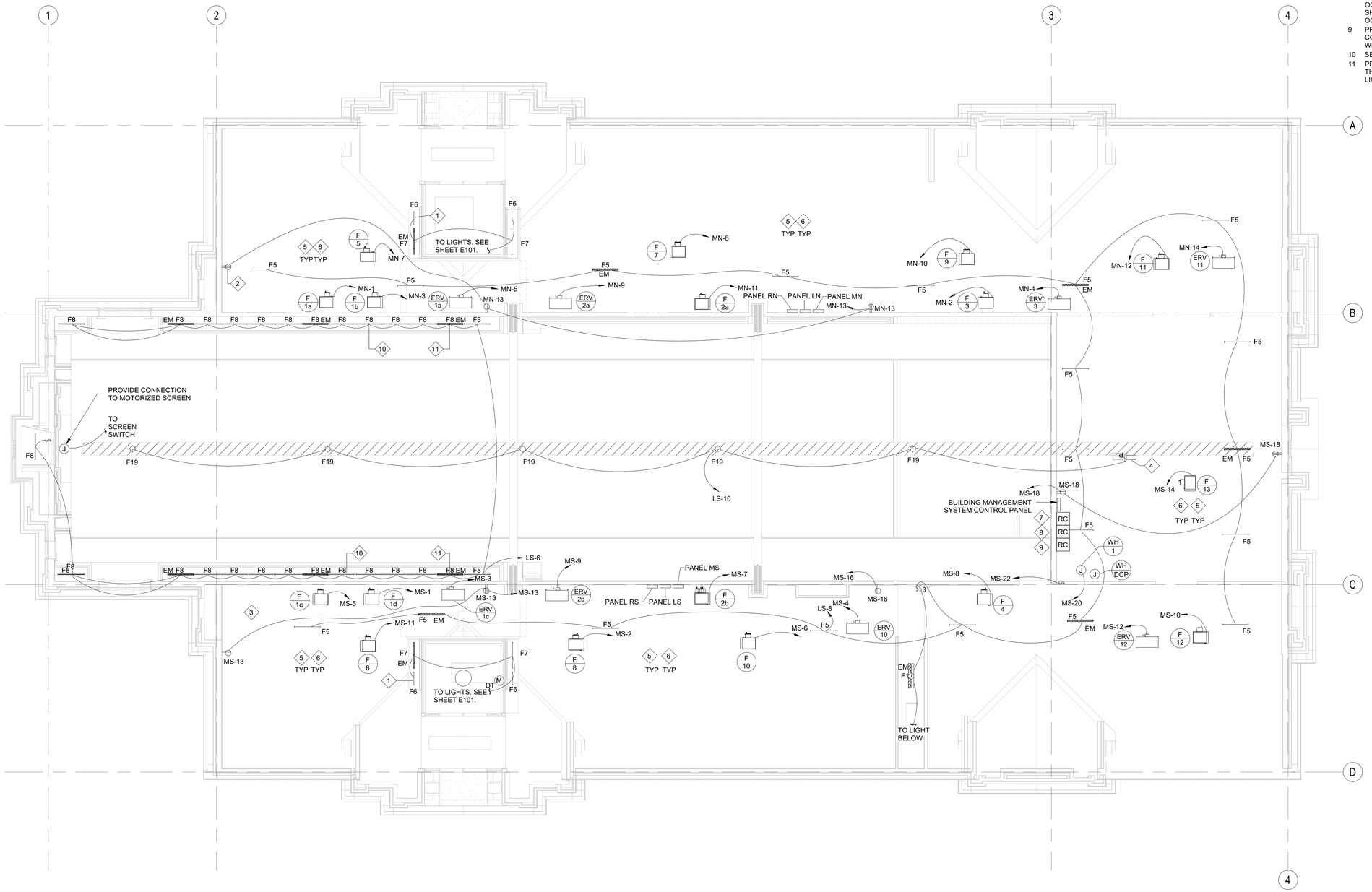

1 EQUIPMENT PLATFORM ELECTRICAL PLAN
1/8" = 1'-0"

bhd ARCHITECTS
www.bhdarchitects.com
Phone 801.571.0010
Fax 801.571.0303
Toll Free 888.571.0010
65 East Wadsworth Park Drive
Suite 205 Draper, Utah 84020

LICENSED PROFESSIONAL ENGINEER
No. 5148728
DAVID G. HINCKLEY
8-15-24
STATE OF UTAH

SPECTRUM ENGINEERS
324 S. State St., Suite 400
Salt Lake City, UT 84111
800-678-7077
801-328-5151
fax: 801-328-5155
www.spectrum-engineers.com

THE CHURCH OF JESUS CHRIST OF LATTER-DAY SAINTS

Springwater 9
Vineyard UT Springwater Stake
Approx. 342 South Geneva Road
Vineyard, Utah 84059

Owner #: 502-2004
Plan Series: C300-MH-11
County Parcel: 39:228:0001
BHD #: 2346
Date: 15 Aug 2024

Drawing Issue and Revision Schedule

#	Date	Description
1	15 Aug 2024	Bid Documents

EQUIPMENT PLATFORM ELECTRICAL PLAN

E104

Autodesk Docs://240510 - Orem Vineyard Springwater Granger 300 Meetinghouse/240510-Elec Central.rvt
8/15/2024 11:48:01 AM

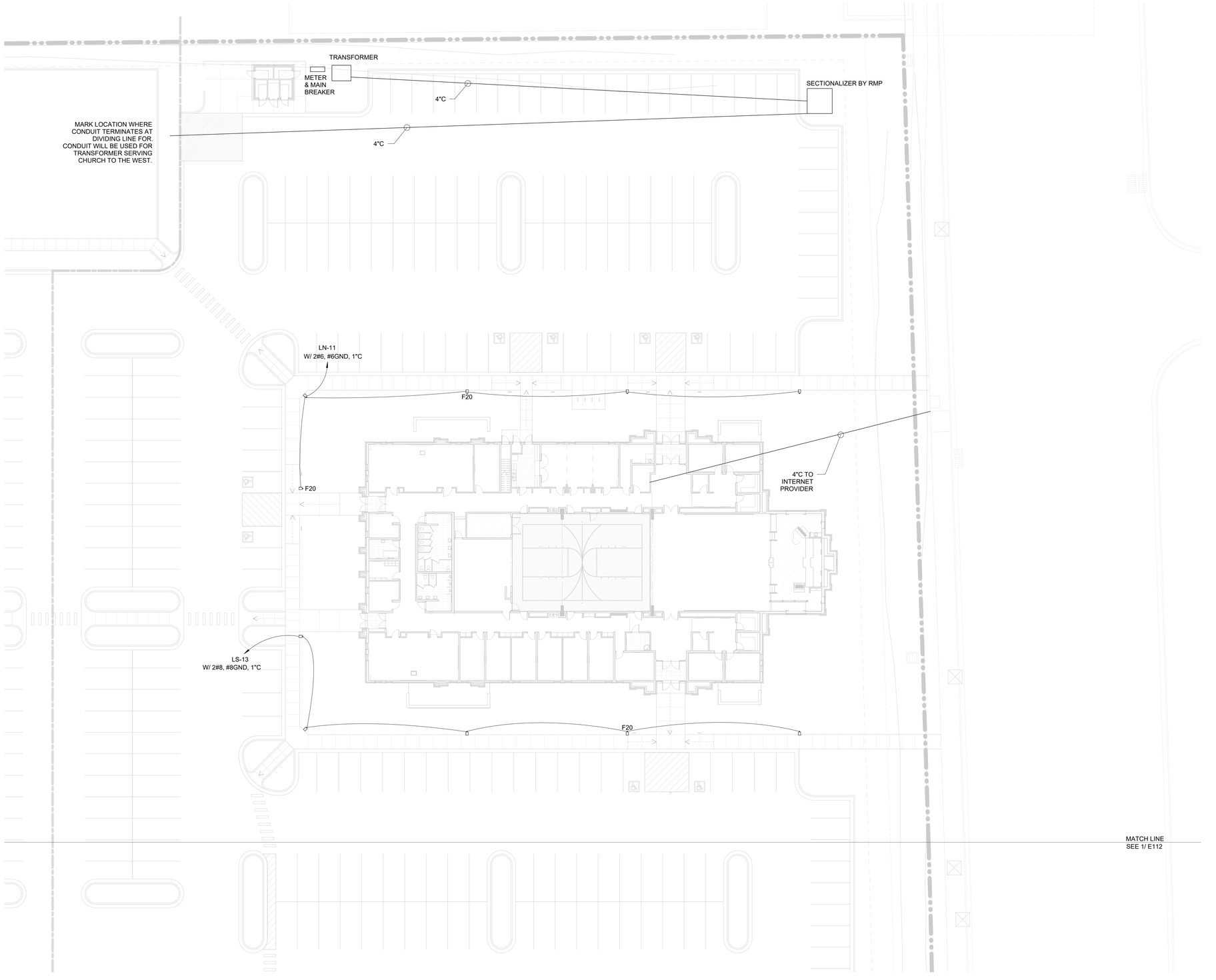

1 ELECTRICAL SITE PLAN - NORTH
1" = 20'-0"

GENERAL NOTES

1 THE ELECTRICAL CONTRACTOR SHALL MEET WITH AND COORDINATE WITH ALL SERVICE PROVIDERS (POWER, COMMUNICATION, CABLE/SATELLITE, ETC.) TO THE FACILITY ON SITE PRIOR TO ANY WORK BEING PREFORMED. CONFIRM WITH EACH SERVICE PROVIDER EXACT LOCATIONS OF EQUIPMENT AND ROUTING. COMPLY WITH ALL SERVICE PROVIDER'S CURRENT STANDARDS AND REQUIREMENTS. PROVIDE THE REQUIRED EQUIPMENT, RACEWAYS, BOXES, CABLE, ETC. AS REQUIRED BY THE SERVICE PROVIDER WHETHER SHOWN ON THE DRAWINGS OR NOT.

2 FOR ALL LIGHT FIXTURES, POLE LIGHTS, AND ALL OTHER ELECTRICAL DEVICES THE CONTRACTOR SHALL COORDINATE EXACT LOCATION AND MOUNTING HEIGHTS WITH ARCHITECT, OWNER, ENGINEER, AND ALL OF THE CONTRACT DOCUMENTS PRIOR TO ROUGH IN AND TRENCHING.

3 CONTRACTOR IS RESPONSIBLE FOR ALL TRENCHING, BACKFILL, AND COMPACTION ASSOCIATED TO ALL ELECTRICAL UNDERGROUND RACEWAYS AND CABLES. COORDINATE WITH ARCHITECTURAL AND CIVIL DRAWINGS. SEE UNDERGROUND RACEWAY DETAILS FOR REQUIREMENTS FOR EACH TRENCH.

4 CONTRACTOR SHALL INSTALL POLE MOUNTED LIGHTS IN STRAIGHT LINES, SQUARE, AND PLUMB. COORDINATE WITH ARCHITECT AND CIVIL DRAWINGS.

5 THE ELECTRICAL CONTRACTOR SHALL HAVE ANY AND ALL CONCRETE POLE BASES AND SLABS REVIEWED BY A STRUCTURAL ENGINEER AND SHALL MODIFY DESIGN PER STRUCTURAL ENGINEER'S AND OR AHJ'S RECOMMENDATIONS.

6 PROVIDE PHOTOCELL ON NORTH SIDE OF FACILITY TO CONTROL EXTERIOR LIGHTS.

7 THE ELECTRICAL CONTRACTOR IS RESPONSIBLE FOR ALL CONCRETE/ASPHALT CUTTING AND REPLACEMENT OF CONCRETE/ASPHALT TO MATCH EXISTING ASSOCIATED WITH UNDERGROUND RACEWAYS PROVIDED AS PART OF THIS PROJECT.

8 REFER TO PLANS FOR CONSTRAINTS ON PHYSICAL DIMENSIONS AND CLEARANCE REQUIREMENTS OF EQUIPMENT. PROVIDE EQUIPMENT DIMENSIONS THAT FALL WITHIN THE CONSTRAINTS OF EACH SPECIFIC LOCATION.

9 PROVIDE SERVICE RATED EQUIPMENT AT EACH SERVICE ENTRANCE.

10 SERVICE EQUIPMENT SHALL BE LEGIBLY MARKED IN THE FIELD WITH THE MAXIMUM AVAILABLE FAULT CURRENT. VERIFY OR RE-CALCULATE THE AVAILABLE FAULT CURRENT AT THE SERVICE WHERE MODIFICATIONS TO THE ELECTRICAL INSTALLATION OCCUR. PLEASE INCLUDE NOTES IN THE ELECTRICAL DRAWINGS OR SUPPLY CALCULATIONS WHERE APPLICABLE. SEE NEC 110.24. (B)

bhd ARCHITECTS
www.bhdarchitects.com
Phone 801.571.0010
Fax 801.571.0303
Toll Free 888.571.0010
65 East Wadsworth Park Drive
Suite 205 Draper, Utah 84020

LICENSED PROFESSIONAL ENGINEER
No. 5148728
DAVID G. HINCKLEY
8-15-24
STATE OF UTAH

SPECTRUM ENGINEERS
324 S. State St., Suite 400
Salt Lake City, UT 84111
800-678-7077
801-328-5151
fax: 801-328-5155
www.spectrum-engineers.com

THE CHURCH OF JESUS CHRIST OF LATTER-DAY SAINTS

Springwater 9
Vineyard UT Springwater Stake
Approx. 342 South Geneva Road
Vineyard, Utah 84059

BHD #: 2346
County Parcel: 39:228:0001
Plan Series: G300-MH-11
Owner #: 502-2004
Date: 15 Aug 2024

Drawing Issue and Revision Schedule

#	Date	Description
1	15 Aug 2024	Bid Documents

ELECTRICAL SITE PLAN - NORTH

E111

Autodesk Docs://240510 - Orem Vineyard Springwater Granger 300 Meetinghouse/240510-Elec Central.rvt
8/15/2024 11:48:04 AM

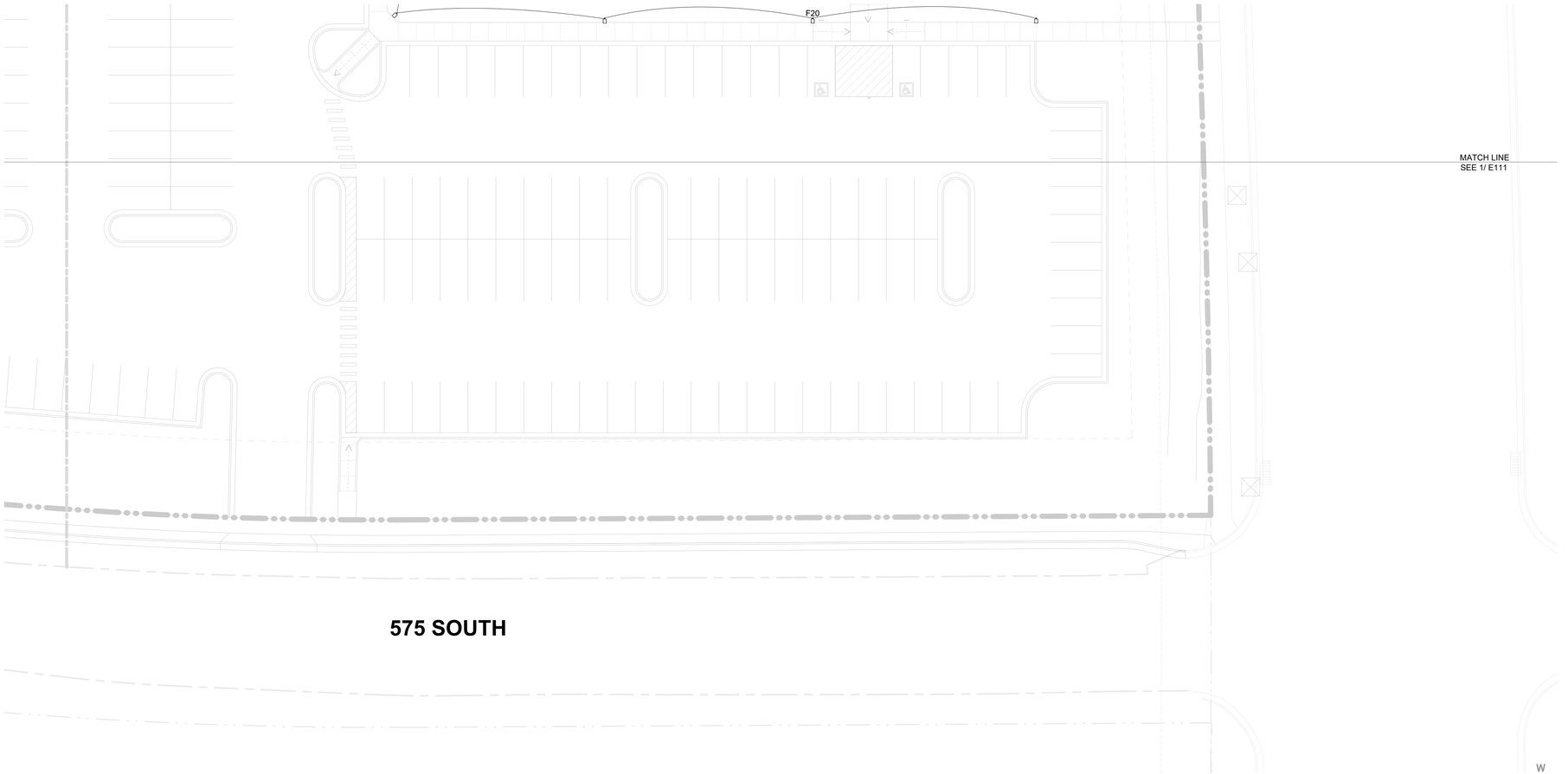

1 ELECTRICAL SITE PLAN - SOUTH
1" = 20'-0"

bhd ARCHITECTS
www.bhdarchitects.com
Phone 801.571.0010
Fax 801.571.0303
Toll Free 888.571.0010
65 East Wadsworth Park Drive
Suite 205 Draper, Utah 84020

LICENSED PROFESSIONAL ENGINEER
No. 5148728
DAVID G. HINCKLEY
8-15-24
STATE OF UTAH

SPECTRUM ENGINEERS
324 S. State St., Suite 400
Salt Lake City, UT 84111
800-678-7077
801-328-5151
fax: 801-328-5155
www.spectrum-engineers.com

THE CHURCH OF JESUS CHRIST OF LATTER-DAY SAINTS

Springwater 9
Vineyard UT Springwater Stake

Approx. 542 South Geneva Road
Vineyard, Utah 84059

Date: 15 Aug 2024
BHD #: 2346
County Parcel: 39:228:0001
Plan Series: G300-MH-11
Owner #: 502-2004

Drawing Issue and Revision Schedule

#	Date	Description
1	15 Aug 2024	Bid Documents

ELECTRICAL SITE PLAN - SOUTH

E112

Autodesk Docs://240510 - Orem Vineyard Springwater Granger 300 Meetinghouse/240510-Elec Central.rvt
8/15/2024 11:48:06 AM

GENERAL NOTES

1. SEE ME SHEETS FOR ELECTRICAL WORK FOR CONTROLS.
2. EXACT LOCATION OF LIGHT FIXTURES SHALL BE AS SHOWN ON REFLECTED CEILING PLAN SHEET A151.
3. CEILING MOUNTED OCCUPANCY SENSORS SHALL NOT BE INSTALLED WITHIN 6 FEET OF ANY MECHANICAL DIFFUSER.
4. LOWER CASE LETTERS ON OR NEAR FIXTURES INDICATE CONTROLLING SWITCHES. SWITCH LEGS NOT ALWAYS SHOWN.
5. SEE SHEET E601 FOR ELECTRICAL SYMBOLS LEGEND.
6. FOR RECESSED LIGHTING IN HALLWAYS AND RESTROOMS, DO NOT CUT JOISTS. ROTATE FIXTURES IF REQUIRED.

KEYED NOTES

1. CIRCUIT THROUGH THE LIGHTING CONTROL PANEL. SEE EXTERIOR LIGHTING CONTROL DIAGRAM SHEET E603.
2. PROVIDE SUFFICIENT BOX DEPTH AND CORRECT PLASTER RING TO ACCOMMODATE ACTUAL RELAY UNIT AND OCCUPANCY SENSOR INSTALLED. ALSO PROVIDE PROPER SEPARATION OF 120V AND CLASS 2 WIRING AS NECESSARY IN ACCORDANCE WITH NEC SET SENSITIVITY AND TIME DELAY OF SENSOR AT MAXIMUM.
3. FIXTURE TO BE ON CONTINUOUSLY (NOT SWITCHED).
4. MOUNT WALL SCONCE AT 7'-6" AFF TO TOP OF FIXTURE.
5. PROVIDE CONTRACTOR FURNISHED FIRE ALARM WIRELESS COMMUNICATOR (DSC 3G4010-CF) AND PROVIDE INTERCONNECT WIRING BACK TO FIRE ALARM PANEL.
6. PROVIDE WIRE GUARD.
7. THIS FIXTURE IS IN THE DAYLIGHT ZONE.
8. PROVIDE A 90 MINUTE REMOTE EMERGENCY LIGHTING UNIT FOR THIS FIXTURE. SEE POWER LAYOUT FOR REMOTE EMERGENCY LIGHTING UNIT LOCATION.
9. PROVIDE MOMENTARY SWITCH TO CONTROL LIGHTING TIED TO OCCUPANCY SENSOR. WIRE TO OCCUPANCY SENSOR OR POWER PACK (DEPENDING ON MANUFACTURER).
10. SEE DETAIL 3/E501 FOR SWITCH LABELING.
11. SEE DETAIL 2/E501 FOR SWITCH LABELING.
12. PROVIDE TWO ZONE ROOM CONTROLLER. HIGH-BAY OCCUPANCY SENSORS SHALL TIE INTO ROOM CONTROLLER. MULTI-BUTTON SWITCHES SHALL CONTROL ZONES SHOWN ON E501.
13. PROVIDE THREE ZONE ROOM CONTROLLER. HIGH-BAY OCCUPANCY SENSORS SHALL TIE INTO ROOM CONTROLLER. MULTI-BUTTON SWITCHES SHALL CONTROL ZONES SHOWN ON E501.

1 MAIN FLOOR LIGHTING PLAN
1/8" = 1'-0"

bhd ARCHITECTS
www.bhdarchitects.com
Phone 801.571.0010
Fax 801.571.0303
Toll Free 888.571.0010
65 East Wadsworth Park Drive
Suite 205 Draper, Utah 84020

LICENSED PROFESSIONAL ENGINEER
No. 5148728
DAVID G. HINCKLEY
8-15-24
STATE OF UTAH

SPECTRUM ENGINEERS
324 S. State St., Suite 400
Salt Lake City, UT 84111
800-678-7077
801-328-5151
fax: 801-328-5155
www.spectrum-engineers.com

THE CHURCH OF JESUS CHRIST OF LATTER-DAY SAINTS

Springwater 9
Vineyard UT Springwater Stake
Approx. 542 South Geneva Road
Vineyard, Utah 84097

Owner #: 502-2004
Plan Series: G300-MH-11
County Parcel: 39:228:0001
BHD #: 2346
Date: 15 Aug 2024

Drawing Issue and Revision Schedule

#	Date	Description
1	15 Aug 2024	Bid Documents

MAIN FLOOR LIGHTING PLAN

E151

Autodesk Docs://240510 - Orem Vineyard Springwater Granger 300 Meetinghouse/240510-Elec Central.rvt
8/15/2024 11:48:13 AM

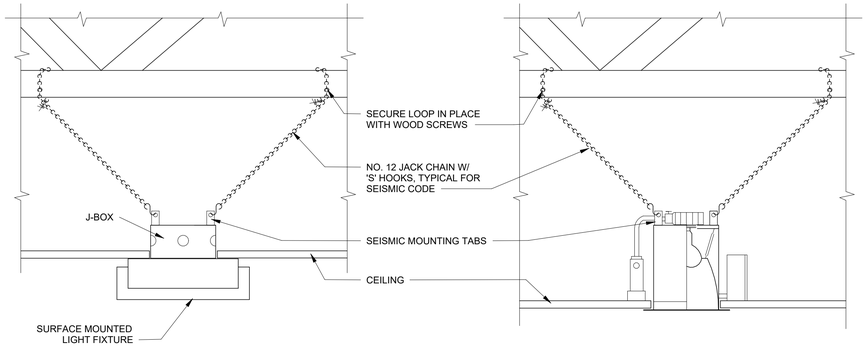

1 LIGHT FIXTURE SEISMIC BRACING
NOT TO SCALE

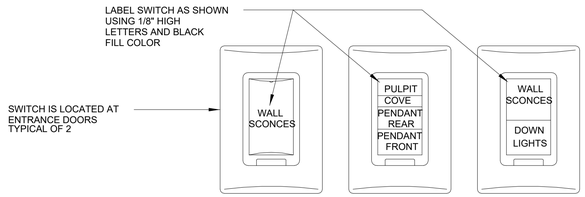

2 CHAPEL LIGHT SWITCH COVER PLATE DETAIL
NOT TO SCALE



3 CULTURAL HALL LIGHT SWITCH COVER PLATE DETAIL
NOT TO SCALE

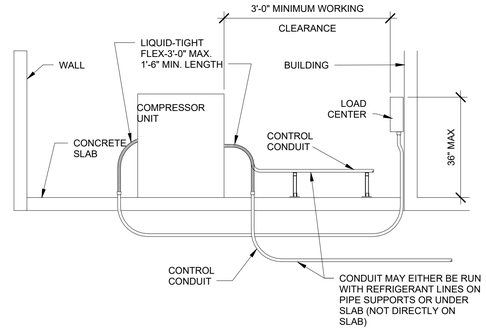

4 COMPRESSOR UNIT CONDUIT DETAIL
NOT TO SCALE

NOTES

1. SEE ARCHITECTURAL SHEETS FOR REQUIRED LIGHTNING PROTECTION SYSTEM. COORDINATE CONNECTION TO THE STEEPLE WITH THE GENERAL CONTRACTOR AND STEEPLE SUPPLIER. MAKE ALL REQUIRED CONNECTIONS FOR A COMPLETE LIGHTING PROTECTION SYSTEM.
2. SUPPORT LIGHTNING CABLES EVERY THREE FEET ALONG ENTIRE RUN USING SPECIFIED FASTENERS.
3. BOND METAL BODIES INTO SYSTEM AS REQUIRED.
4. FURNISH AND INSTALL SURGE PROTECTION DEVICE (SPD) FOR MAIN ELECTRICAL PANEL. REFER TO SPECIFICATIONS.
5. ELECTRICAL CONTRACTOR SHALL COORDINATE ALL CONNECTION REQUIREMENTS TO THE STEEPLE WITH THE GENERAL CONTRACTOR AND STEEPLE SUPPLIER. ELECTRICAL CONTRACTOR SHALL BE ON SITE WHEN THE STEEPLE IS INSTALLED AND MAKE ALL REQUIRED CONNECTIONS TO THE LIGHTNING PROTECTION SYSTEM.
6. REFER TO THE SPECIFICATIONS FOR ADDITIONAL INFORMATION AND REQUIREMENTS.
7. REFER TO THE SPECIFICATIONS FOR FITTING REQUIREMENTS.

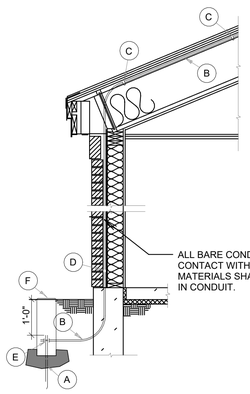

LEGEND

- A GROUND ROD
- B SMOOTH TWIST COPPER CABLE
- C COPPER LOOP FASTENER
- D LARGE BRONZE CLAMP
- E PERPENDICULAR GROUND ROD AND CABLE CLAMP
- F GROUND INSPECTION WELL

P CABLE INSTALLATION DETAIL
SCALE: 1/2" = 1'-0"

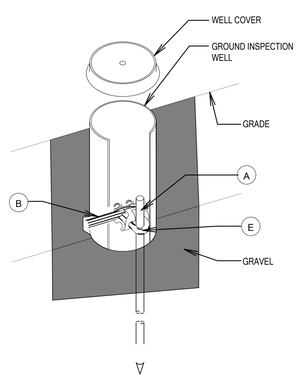

R GROUND INSPECTION WELL
NOT TO SCALE

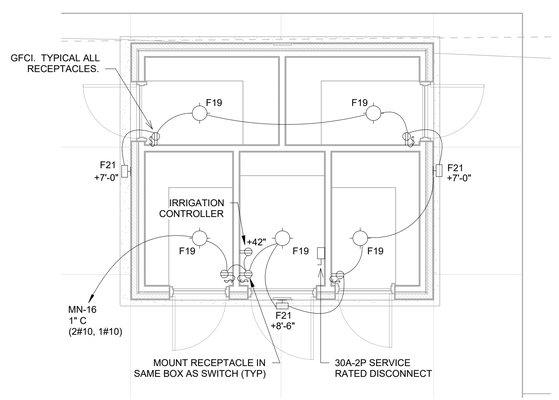

5 STORAGE BUILDING ELECTRICAL PLAN
1/4" = 1'-0"

bhd ARCHITECTS
www.bhdarchitects.com
Phone 801.571.0010
Fax 801.571.0303
Toll Free 888.571.0010
65 East Wadsworth Park Drive
Suite 205 Draper, Utah 84020

LICENSED PROFESSIONAL ENGINEER
No. 5148728
DAVID G. HINCKLEY
8-15-24
STATE OF UTAH

SPECTRUM ENGINEERS
324 S. State St., Suite 400
Salt Lake City, UT 84111
800-678-7077
801-328-5151
fax: 801-328-5155
www.spectrum-engineers.com

THE CHURCH OF JESUS CHRIST OF LATTER-DAY SAINTS

Springwater 9
Vineyard UT Springwater Stake
Approx. 542 South Geneva Road
Vineyard, Utah 84059

Date: 15 Aug 2024
BHD #: 2346
County Parcel: 39:228:0001
Plan Series: G300-MH-11
Owner #: 502-2004

Drawing Issue and Revision Schedule

#	Date	Description
1	15 Aug 2024	Bid Documents

ELECTRICAL DETAILS

E501

Autodesk Docs://240510 - Orem Vineyard Springwater Granger 300 Meetinghouse/240510-Elec Central.rvt
8/15/2024 11:48:15 AM

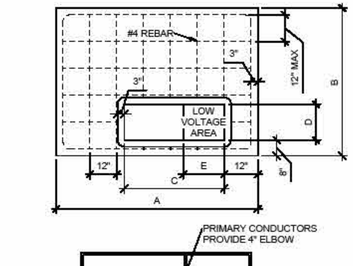

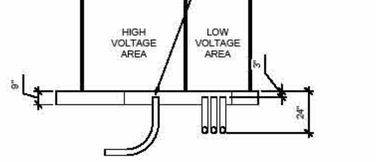



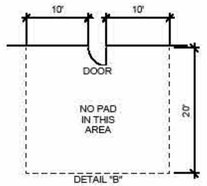

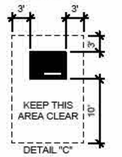

TRANSFORMER PAD DIMENSION CHART

TRANSFORMER RATING	DIMENSIONS				
	A	B	C	D	E
75-500 KVA	96"	78"	48"	15"	20"
750-2500 KVA	100"	106"	60"	16"	30"

CONTRACTOR GENERAL NOTES:

1. SITE PREPARATION. ALL SOIL BENEATH THE PAD SITE MUST BE COMPACTED AND LEVEL PRIOR TO SETTING OR POURING THE PAD TO PREVENT SETTLING.
2. CONCRETE. STEEL REINFORCEMENT SHALL BE #4 BARS, PLACED ACCORDING TO THE DRAWING. THE PAD MUST BE POURED AT LEAST SEVEN FULL DAYS PRIOR TO SETTING THE TRANSFORMER. THE FINISHED SURFACE MUST BE COMPLETELY FLAT AND LEVEL. SEE STANDARD 73 036 FOR CONCRETE SPECIFICATIONS.
3. PREFABRICATION. THE PAD MAY EITHER BE CONSTRUCTED ON THE SITE OR PREFABRICATED ACCORDING TO SPECIFICATIONS.
4. CONDUIT WINDOW LAYOUT. LOW VOLTAGE CONDUITS SHALL BE FORMED AS TIGHTLY AS POSSIBLE AGAINST THE RIGHT SIDE OF THE OPENING AND SHALL IN NO CASE EXTEND FURTHER THAN 20" FROM THE RIGHT SIDE OF THE CONDUIT WINDOW ON THE SMALL PAD OR 30" ON THE LARGE PAD. NO MORE THAN 8 CONDUITS WILL BE USED ON THE LOW VOLTAGE SIDE (NOT INCLUDING THE METERING CONDUIT). DO NOT PUT ANY CONCRETE IN OR UNDER THE CONDUIT WINDOW. USE SOIL TO SEPARATE CONDUITS. BELL ENDS ARE REQUIRED FOR ALL METAL CONDUIT, BUT NOT FOR PLASTIC CONDUIT.
5. CLEARANCES. THE FRONT OF THE PAD SHOULD ALWAYS FACE AWAY FROM ADJACENT STRUCTURES AND BE FREE OF OBSTRUCTIONS. AT LEAST 3 FEET MUST SEPARATE THE EDGES OF THE PAD FROM ANY ADJACENT STRUCTURE. THE EDGES OF THE PAD MUST BE AT LEAST 10 FEET FROM ANY COMBUSTIBLE STRUCTURE. IF AN ADJACENT STRUCTURE HAS ANY OVERHANG OR EAVE WITHIN 27 VERTICAL FEET OF THE TOP OF THE PAD, CLEARANCES MUST BE MEASURED FROM THE OUTSIDE OF THE OVERHANG. THE PAD MUST NOT BE PLACED IN AN AREA 10 FEET IN LINE WITH OR 3 FEET TO EITHER SIDE OF ANY WINDOW IN AN ADJACENT STRUCTURE (SEE DETAIL "A"). CLEARANCE FOR A DOOR MUST BE 20 FEET IN LINE WITH IT AND 10 FEET ON THE SIDES (SEE DETAIL "B"). PADS MUST NOT BE PLACED WITHIN 15 FEET OF ANY VALVE OR WITHIN 20 FEET OF ANY PLUMBING OR STORAGE FACILITY CONTAINING FLAMMABLE MATERIAL. NO WALLS, FENCES, OR ANY OTHER OBSTRUCTIONS WILL BE PLACED WITHIN 3 FEET OF THE SIDES OR BACK OF THE PAD, OR WITHIN 10 FEET OF THE FRONT OF THE PAD (SEE DETAIL "C"). THE AREA IN FRONT OF THE PAD MUST HAVE 10 FEET OF CLEAR, LEVEL WORKING AREA FOR MAINTENANCE OF THE TRANSFORMER. THE PAD MAY NOT BE PLACED IN LINE WITH AN AIR INTAKE WITHIN 32 VERTICAL FEET OF THE SURFACE PAD. ALSO VERTICALLY, IT MUST NOT BE PLACED WITHIN 12 FEET OF A DOOR OR WINDOW.
6. BARRIERS. IF THE TRANSFORMER PAD IS TO BE LOCATED IN AREAS SUBJECT TO VEHICULAR TRAFFIC, (PARKING LOTS, DRIVEWAYS, ETC) CONTACT UTAH POWER & LIGHT FOR PROTECTIVE BARRIER REQUIREMENTS.
7. IF THE TRANSFORMER WILL NOT COVER THE CABLE OPENINGS ON THESE STANDARD PADS, SEAL THE SIDES OF THE CABLE OPENING TO FIT THE TRANSFORMER USING SAKRETE OR COMPARABLE.

bhd ARCHITECTS
www.bhdarchitects.com
Phone 801.571.0010
Fax 801.571.0303
Toll Free 888.571.0010
65 East Wadsworth Park Drive
Suite 205 Draper, Utah 84020

LICENSED PROFESSIONAL ENGINEER
No. 5148728
DAVID G. HINCKLEY
8-15-24
STATE OF UTAH

SPECTRUM ENGINEERS
324 S. State St., Suite 400
Salt Lake City, UT 84111
800-678-7077
801-328-5151
fax: 801-328-5155
www.spectrum-engineers.com

THE CHURCH OF JESUS CHRIST OF LATTER-DAY SAINTS

Springwater 9
Vineyard UT Springwater Stake

Approx. 542 South Geneva Road
Vineyard, Utah 84059

Date: 15 Aug 2024
BHD #: 2346
County Parcel: 39-228:0001
Plan Series: G300-MH-11
Owner #: 502-2004

Drawing Issue and Revision Schedule

#	Date	Description
1	15 Aug 2024	Bid Documents

TRANSFORMER PAD DETAIL

E502

Autodesk Docs://240510 - Orem Vineyard Springwater Granger 300 Meetinghouse/240510-Elec Central.rvt
8/15/2024 11:48:16 AM

Compressor Unit Circuiting Schedule

Load Name	Wire Size	Wire Type	Breaker Rating	Apparent Current
COMPRESSOR UNIT CU-1a	2-#8, 1-#10	Cu THHN	45 A	28 A
COMPRESSOR UNIT CU-1b	2-#8, 1-#10	Cu THHN	45 A	28 A
COMPRESSOR UNIT CU-1c	2-#8, 1-#10	Cu THHN	45 A	28 A
COMPRESSOR UNIT CU-1d	2-#8, 1-#10	Cu THHN	45 A	28 A
COMPRESSOR UNIT CU-2a	2-#6, 1-#10	Cu THHN	50 A	32 A
COMPRESSOR UNIT CU-2b	2-#6, 1-#10	Cu THHN	50 A	32 A
COMPRESSOR UNIT CU-3	2-#6, 1-#10	Cu THHN	50 A	32 A
COMPRESSOR UNIT CU-4	2-#8, 1-#10	Cu THHN	35 A	22 A
COMPRESSOR UNIT CU-5	2-#10, 1-#10	Cu THHN	30 A	19 A
COMPRESSOR UNIT CU-6	2-#10, 1-#10	Cu THHN	30 A	19 A
COMPRESSOR UNIT CU-7	2-#8, 1-#10	Cu THHN	45 A	28 A
COMPRESSOR UNIT CU-8	2-#8, 1-#10	Cu THHN	35 A	22 A
COMPRESSOR UNIT CU-9	2-#8, 1-#10	Cu THHN	45 A	28 A
COMPRESSOR UNIT CU-10	2-#8, 1-#10	Cu THHN	45 A	28 A
COMPRESSOR UNIT CU-11	2-#8, 1-#10	Cu THHN	45 A	28 A
COMPRESSOR UNIT CU-12	2-#6, 1-#10	Cu THHN	50 A	32 A
COMPRESSOR UNIT CU-13	2-#8, 1-#10	Cu THHN	35 A	22 A

Exhaust Fan Circuiting Schedule

Load Name	Watts	# of Runs	Wire Size	Wire Type	Breaker Rating	Comments
LTS-PRIM,RM,EF-5		2	1-#12, 1-#12, 1-#12	Cu THHN	20 A	REFER TO DRAWINGS FOR FAN SWITCH CIRCUITING
LTS-MAT,RMS,EF-7	250	3	1-#12, 1-#12, 1-#12	Cu THHN	20 A	REFER TO DRAWINGS FOR FAN SWITCH CIRCUITING
LTS-RR,EF-1,2	100	1	1-#12, 1-#12, 1-#12	Cu THHN	20 A	REFER TO DRAWINGS FOR FAN SWITCH CIRCUITING
LTS-RM,SA,EF-3,4,6	166	1	1-#12, 1-#12, 1-#12	Cu THHN	20 A	REFER TO DRAWINGS FOR FAN SWITCH CIRCUITING

Electric Heater Circuiting Schedule

Load Name	Voltage	Wire Size	Wire Type	Breaker Rating	Apparent Load
EH-1	208 V	1-#12, 1-#12, 1-#12	Cu THHN	20 A	3000 VA

Energy Recovery Units Circuiting Schedule

Load Name	# of Runs	Wire Size	Wire Type	Breaker Rating	Apparent Load
ERV-1a	1	1-#10, 1-#10, 1-#10	Cu THHN	25 A	2064 VA
ERV-1c	1	1-#10, 1-#10, 1-#10	Cu THHN	25 A	2064 VA
ERV-2a	1	1-#10, 1-#10, 1-#10	Cu THHN	25 A	2064 VA
ERV-2b	1	1-#10, 1-#10, 1-#10	Cu THHN	25 A	2064 VA
ERV-3	1	1-#10, 1-#10, 1-#10	Cu THHN	25 A	2064 VA
ERV-10	1	1-#10, 1-#10, 1-#10	Cu THHN	25 A	2064 VA
ERV-11	1	1-#10, 1-#10, 1-#10	Cu THHN	25 A	2064 VA
ERV-12	2	1-#10, 1-#10, 1-#10	Cu THHN	25 A	2064 VA

Fan Circuiting Schedule

Load Name	Wire Size	Wire Type	Breaker Rating	True Current	Comments
FAN F-1a	2-#12, 1-#12	Cu THHN	20 A	7 A	Provide a combination starter disconnect. The starter shall be controlled by the fire alarm system for automatic shut-off upon alarm.
FAN F-1b	2-#12, 1-#12	Cu THHN	20 A	7 A	Provide a combination starter disconnect. The starter shall be controlled by the fire alarm system for automatic shut-off upon alarm.
FAN F-1c	2-#12, 1-#12	Cu THHN	20 A	7 A	Provide a combination starter disconnect. The starter shall be controlled by the fire alarm system for automatic shut-off upon alarm.
FAN F-1d	2-#12, 1-#12	Cu THHN	20 A	7 A	Provide a combination starter disconnect. The starter shall be controlled by the fire alarm system for automatic shut-off upon alarm.
FAN F-2a	2-#12, 1-#12	Cu THHN	20 A	14 A	Provide a combination starter disconnect. The starter shall be controlled by the fire alarm system for automatic shut-off upon alarm.
FAN F-2b	2-#12, 1-#12	Cu THHN	20 A	14 A	Provide a combination starter disconnect. The starter shall be controlled by the fire alarm system for automatic shut-off upon alarm.
FAN F-3	2-#12, 1-#12	Cu THHN	20 A	14 A	Provide a combination starter disconnect. The starter shall be controlled by the fire alarm system for automatic shut-off upon alarm.
FAN F-4	2-#12, 1-#12	Cu THHN	20 A	7 A	Provide a combination starter disconnect. The starter shall be controlled by the fire alarm system for automatic shut-off upon alarm.
FAN F-5	2-#12, 1-#12	Cu THHN	20 A	7 A	Provide a combination starter disconnect. The starter shall be controlled by the fire alarm system for automatic shut-off upon alarm.
FAN F-6	2-#12, 1-#12	Cu THHN	20 A	7 A	Provide a combination starter disconnect. The starter shall be controlled by the fire alarm system for automatic shut-off upon alarm.
FAN F-7	2-#12, 1-#12	Cu THHN	20 A	10 A	Provide a combination starter disconnect. The starter shall be controlled by the fire alarm system for automatic shut-off upon alarm.
FAN F-8	2-#12, 1-#12	Cu THHN	20 A	10 A	Provide a combination starter disconnect. The starter shall be controlled by the fire alarm system for automatic shut-off upon alarm.
FAN F-9	2-#12, 1-#12	Cu THHN	20 A	10 A	Provide a combination starter disconnect. The starter shall be controlled by the fire alarm system for automatic shut-off upon alarm.
FAN F-10	2-#12, 1-#12	Cu THHN	20 A	10 A	Provide a combination starter disconnect. The starter shall be controlled by the fire alarm system for automatic shut-off upon alarm.
FAN F-11	2-#12, 1-#12	Cu THHN	20 A	14 A	Provide a combination starter disconnect. The starter shall be controlled by the fire alarm system for automatic shut-off upon alarm.
FAN F-12	2-#12, 1-#12	Cu THHN	20 A	14 A	Provide a combination starter disconnect. The starter shall be controlled by the fire alarm system for automatic shut-off upon alarm.
FAN F-13	2-#12, 1-#12	Cu THHN	20 A	7 A	Provide a combination starter disconnect. The starter shall be controlled by the fire alarm system for automatic shut-off upon alarm.

Electrical Device Schedule

Description	Manufacturer	Model	Count
20 A Tamper-proof Duplex receptacle	Cooper	TR5362W	2
20 A Wall Switch	Cooper	CSB320	6
20A GFCI Protected Receptacle	Hubbell	GFR8300H	15
20A Tamper-proof Duplex Receptacle	Cooper	TR5362W	117
Automatic Door Operating Switch	Refer to Specifications		2
Automatic Door Operator	Refer to Specifications		2
Circulating Pump	Refer to Specifications		1
EWC GFCI Protected Receptacle	Hubbell	GFR8300H	2
Fire Alarm Control Panel	Refer to Specifications		1
Organ Junction Box	Refer to Specifications		1
Projection Screen	Refer to Specifications		1
Range Receptacle	Specification	Per equipment's manufacturer	1
Switched Duplex Receptacle	Cooper	TR5362W	4
Thermal trip switch in NEMA 4 enclosure	Square-D	FG6P	18
Thermostat	Refer to Specifications		1
Water Heater	Refer to Specifications		1
Weather proof while-in use GFCI duplex outlet. Provide alluminum cover and weather rated GFCI outlet.	Hubbell	GFTR20SCBA-WP26M	4

Lighting Device Schedule

Description	Manufacturer	Model	Count
15 A Pilot Switch	Cooper	294	1
20 A Single Pole Dimmer Switch	Refer to Specifications		12
20 A Single Pole Light Switch	Refer to Specifications		11
20 A Three Way Light Switch	Refer to Specifications		4
30 A Manual Motor Control Switch	Refer to Specifications		1
Dual technology ceiling mounted occupancy sensor with override switch	Wattstopper or Leviton equivalent	DT-355	34
Dual technology wall mounted occupancy sensor	Wattstopper or Leviton equivalent	DW-100	33
Momentary Light Switch	Refer to Specifications		9

Electrical Symbols Legend

NOTE: ALL SYMBOLS MAY NOT BE USED

S	Wall Switch
S3	Three-Way Wall Switch
S4	Four-Way Wall Switch
SDT	Digital Time Switch
SF	Motor Fan Switch
SM	Momentary Switch
SP	Pilot Switch
D	Dimmer Switch
	Duplex 20 A Receptacle
	Switched Duplex Receptacle
EWC GFCI	Electric Water Cooler GFCI Protected Receptacle
F	Flush Floor Fire Poke Through With Data Outlet
GFCI	Duplex 20 A GFCI Protected Receptacle
R	Range Receptacle
T	Duplex 20 A Tamper Proof Receptacle
WP GFCI	Duplex 20 A Weather Proof Receptacle. Provide a GFCI outlet and while in-use cover.
	Special Purpose Outlet. Provide per equipment manufacturer requirements.
▽	4" x 4" x 2-1/8" deep flush j-box with single gang mudring, 3/4" conduit to service entrance.
J	4" x 4" x 2-1/8" deep flush j-box with mudring to match application
M	Dual Technology Wall Mounted Occupancy Sensor
MDT	Dual Technology Ceiling Mounted Occupancy Sensor With Override Switch
	Electric Motor
EF 1	Mechanical Equipment Symbol
	Disconnect Switch
	Panelboard
	Branch Circuit Concealed in Ceiling, Wall or Floor
A-1	Circuit Homerun to Panel
?	Reference Note Callout
P	Photocell
	Fixture With Emergency Battery Pack
F2	Fixture Type
	Combination Starter Disconnect

Lighting Fixture Symbols

	F1
	F2
	F3
	F4
	F5
	F6
	F7
	F8
	F10
	F11
	F12
	F13
	F14
	F15
	F16
	F17
	F18
	F19
	F20
	F21
	F22
	F23
	F24
	F25

bhd ARCHITECTS
www.bhdarchitects.com
Phone 801.571.0010
Fax 801.571.0303
Toll Free 888.571.0010
65 East Wadsworth Park Drive
Suite 205 Draper, Utah 84020

LICENSED PROFESSIONAL ENGINEER
No. 5148728
DAVID G. HINCKLEY
8-15-24
STATE OF UTAH

SPECTRUM ENGINEERS
324 S. State St., Suite 400
Salt Lake City, UT 84111
800-678-7077
801-328-5151
fax: 801-328-5155
www.spectrum-engineers.com

THE CHURCH OF JESUS CHRIST OF LATTER-DAY SAINTS

Springwater 9
Vineyard UT Springwater Stake

Approx. 342 South Geneva Road
Vineyard, Utah 84059

Owner #: 502-2004
Plan Series: C300-MH-11
County Parcel: 39:228:0001
BHD #: 2346
Date: 15 Aug 2024

Drawing Issue and Revision Schedule

#	Date	Description
1	15 Aug 2024	Bid Documents

SCHEDULES & SYMBOLS

E601

Autodesk Docs://240510 - Orem Vineyard Springwater Granger 300 Meetinghouse/240510-Elec Central.rvt
8/15/2024 11:48:17 AM

BRANCH PANEL LN

Location: EQUIPMENT PLATFORM 201 **Volts:** 120/208 Wye **A.I.C. Rating:** 22000
Supply From: PANEL M **Phases:** 3 **Mains Type:** MLO
Mounting: SURFACE **Wires:** 4 **Mains Rating:** 100 A
Enclosure: Type 1

CKT	Circuit Description	Trip	Poles	A	B	C	Poles	Trip	Circuit Description	CKT
LN-1	LTS-BSHP,CLERK	20 A	1	360 VA	1173 VA		1	20 A	LTS-PRIM,RM,EF-5	LN-2
LN-3	LTS/RCPT-FOYER	20 A	1		879 VA	628 VA	1	20 A	LTS-RR,EF-1,2	LN-4
LN-5	LTS-MAT,RMS,EF-7	20 A	1			1578 VA	522 VA	1	20 A	LTS-ROOM,STOR	LN-6
LN-7	LTS-HALL	20 A	1	803 VA	0 VA			1	20 A	Spare	LN-8
LN-9	LTS-EXTERIOR	20 A	1		120 VA	0 VA		1	20 A	Spare	LN-10
LN-11	Ltg Site	20 A	1			400 VA	--	1	--	Space	LN-12
LN-13	Spare	20 A	1	0 VA	--			1	--	Space	LN-14
LN-15	Spare	20 A	1		0 VA	--		1	--	Space	LN-16
			Total Load:	2332 VA	1627 VA	2480 VA				
			Tot. Amps:	20 A	14 A	22 A				

Legend:

Load Classification	Connected Load	Demand Factor	Est. Demand	Panel Totals	
Cooling	700 VA	100.00%	700 VA		
Lighting	1759 VA	100.00%	1759 VA	**Total Conn. Load:**	6425 VA
Other	3670 VA	100.00%	3670 VA	**Total Est. Demand:**	6299 VA
Receptacle	360 VA	65.00%	234 VA	**Total Conn.:**	18 A
				Total Est. Demand:	17 A

Notes:
1. PROVIDE ARC-FLASH HAZARD LABELS PER SPECIFICATION.

BRANCH PANEL LS

Location: EQUIPMENT PLATFORM 201 **Volts:** 120/208 Wye **A.I.C. Rating:** 22000
Supply From: PANEL M **Phases:** 3 **Mains Type:** MLO
Mounting: SURFACE **Wires:** 4 **Mains Rating:** 100 A
Enclosure: Type 1

CKT	Circuit Description	Trip	Poles	A	B	C	Poles	Trip	Circuit Description	CKT
LS-1	LTS-BSHP,CLERK	20 A	1	360 VA	981 VA		1	20 A	LTS-CULT HALL	LS-2
LS-3	LTS-FOYER	20 A	1		879 VA	2269 VA	1	20 A	LTS-ROST,CHAPEL	LS-4
LS-5	LTS-RM,SA,EF-3,4,6	20 A	1			1712 VA	1754 VA	1	20 A	LTS-ROST,COVE	LS-6
LS-7	LTS-HALL	20 A	1	603 VA	668 VA			1	20 A	LTS-EQ PLAT	LS-8
LS-9	LTS-EXTERIOR	20 A	1		160 VA	300 VA		1	20 A	ATTIC LIGHTS	LS-10
LS-11	LTS-RELIEF SOC	20 A	1			402 VA	--	1	--	Space	LS-12
LS-13	Ltg Site	20 A	1	400 VA	--			1	--	Space	LS-14
LS-15	Spare	20 A	1		0 VA	--		1	--	Space	LS-16
			Total Load:	2979 VA	3179 VA	3852 VA				
			Tot. Amps:	25 A	27 A	32 A				

Legend:

Load Classification	Connected Load	Demand Factor	Est. Demand	Panel Totals	
Cooling	347 VA	100.00%	347 VA		
Lighting	2384 VA	100.00%	2384 VA	**Total Conn. Load:**	9583 VA
Other	6523 VA	100.00%	6523 VA	**Total Est. Demand:**	9462 VA
Receptacle	360 VA	65.00%	234 VA	**Total Conn.:**	27 A
				Total Est. Demand:	26 A

Notes:
1. PROVIDE ARC-FLASH HAZARD LABELS PER SPECIFICATION.

BRANCH PANEL MN

Location: EQUIPMENT PLATFORM 201 **Volts:** 120/208 Wye **A.I.C. Rating:** 22000
Supply From: PANEL M **Phases:** 3 **Mains Type:** MLO
Mounting: SURFACE **Wires:** 4 **Mains Rating:** 100 A
Enclosure: Type 1

CKT	Circuit Description	Trip	Poles	A	B	C	Poles	Trip	Circuit Description	CKT
MN-1	FAN F-1a	20 A	1	864 VA	1656 VA		1	20 A	FAN F-3	MN-2
MN-3	FAN F-1b	20 A	1		864 VA	2064 VA	1	25 A	ERV-3	MN-4
MN-5	ERV-1a	25 A	1			2064 VA	1176 VA	1	20 A	FAN F-7	MN-6
MN-7	FAN F-5	20 A	1	864 VA	0 VA			1	20 A	Spare	MN-8
MN-9	ERV-2a	25 A	1		2064 VA	1176 VA		1	20 A	FAN F-9	MN-10
MN-11	FAN F-2a	20 A	1			1656 VA	1656 VA	1	20 A	FAN F-11	MN-12
MN-13	RCPT-EQ PLAT	20 A	1	540 VA	2064 VA			1	25 A	ERV-11	MN-14
MN-15	Spare	20 A	1		0 VA	1308 VA		1	20 A	SHED POWER	MN-16
MN-17	Spare	20 A	1			0 VA	0 VA	1	20 A	Spare	MN-18
MN-19	Spare	20 A	1	0 VA	--			1	--	Space	MN-20
MN-21	Spare	20 A	1		0 VA	--		1	--	Space	MN-22
MN-23	Spare	20 A	1			0 VA	--	1	--	Space	MN-24
			Total Load:	5988 VA	7474 VA	6552 VA				
			Tot. Amps:	50 A	63 A	55 A				

Legend:

Load Classification	Connected Load	Demand Factor	Est. Demand	Panel Totals	
Lighting	300 VA	100.00%	300 VA		
Other	10032 VA	100.00%	10032 VA	**Total Conn. Load:**	20013 VA
Power	8256 VA	100.00%	8256 VA	**Total Est. Demand:**	19092 VA
Receptacle	1440 VA	36.00%	518 VA	**Total Conn.:**	56 A
				Total Est. Demand:	53 A

Notes:
1. PROVIDE ARC-FLASH HAZARD LABELS PER SPECIFICATION.

BRANCH PANEL MS

Location: EQUIPMENT PLATFORM 201 **Volts:** 120/208 Wye **A.I.C. Rating:** 22000
Supply From: PANEL M **Phases:** 3 **Mains Type:** MLO
Mounting: SURFACE **Wires:** 4 **Mains Rating:** 225 A
Enclosure: Type 1

CKT	Circuit Description	Trip	Poles	A	B	C	Poles	Trip	Circuit Description	CKT
MS-1	FAN F-1d	20 A	1	864 VA	1176 VA		1	20 A	FAN F-8	MS-2
MS-3	ERV-1c	25 A	1		2064 VA	2064 VA	1	25 A	ERV-10	MS-4
MS-5	FAN F-1c	20 A	1			864 VA	1176 VA	1	20 A	FAN F-10	MS-6
MS-7	FAN F-2b	20 A	1	1656 VA	864 VA			1	20 A	FAN F-4	MS-8
MS-9	ERV-2b	25 A	1		2064 VA	1656 VA		1	20 A	FAN F-12	MS-10
MS-11	FAN F-6	20 A	1			864 VA	2064 VA	1	25 A	ERV-12	MS-12
MS-13	RCPT-EQ PLAT	20 A	1	360 VA	864 VA			1	20 A	FAN F-13	MS-14
MS-15	RCPT-TECH	20 A	1		180 VA	180 VA		1	20 A	RCPT-EQ PLAT	MS-16
MS-17	RCPT-TECH	20 A	1			180 VA	360 VA	1	20 A	RCPT-EQ PLAT	MS-18
MS-19	RCPT-TECH	20 A	1	180 VA	840 VA			1	20 A	WATER HTR WH-1	MS-20
MS-21	RCPT-TECH	20 A	1		180 VA	500 VA		1	20 A	WATER HTR WH-2	MS-22
MS-23	RCPT-TECH	20 A	1			180 VA	5000 VA	2	50 A	RANGE OUTLET (NOTE 2)	MS-24
MS-25	Spare	20 A	1	0 VA	5000 VA						MS-26
MS-27	EH-1	20 A	2		1500 VA	--		1	--	Shunt Trip	MS-28
MS-29						1500 VA	0 VA	1	20 A	Spare	MS-30
MS-31	Spare	20 A	1	0 VA	0 VA			1	20 A	Spare	MS-32
MS-33	Spare	20 A	1		0 VA	0 VA		1	20 A	Spare	MS-34
MS-35	Spare	20 A	1			0 VA	0 VA	1	20 A	Spare	MS-36
			Total Load:	11804 VA	10388 VA	12188 VA				
			Tot. Amps:	100 A	87 A	103 A				

Legend:

Load Classification	Connected Load	Demand Factor	Est. Demand	Panel Totals	
Appliance	10000 VA	100.00%	10000 VA		
Other	9984 VA	100.00%	9984 VA	**Total Conn. Load:**	34380 VA
Power	12596 VA	100.00%	12596 VA	**Total Est. Demand:**	33192 VA
Receptacle	1800 VA	34.00%	612 VA	**Total Conn.:**	95 A
				Total Est. Demand:	92 A

Notes:
1. PROVIDE ARC-FLASH HAZARD LABELS PER SPECIFICATION.
2. PROVIDE SHUNT TRIP CIRCUIT BREAKER. SHUNT TRIP SHALL BE CONTROLLED BY FIRE ALARM PANEL.

BRANCH PANEL RN

Location: EQUIPMENT PLATFORM 201 **Volts:** 120/208 Wye **A.I.C. Rating:** 22000
Supply From: PANEL M **Phases:** 3 **Mains Type:** MLO
Mounting: SURFACE **Wires:** 4 **Mains Rating:** 100 A
Enclosure: Type 1

CKT	Circuit Description	Trip	Poles	A	B	C	Poles	Trip	Circuit Description	CKT
RN-1	RCPT-BISHOP	20 A	1	900 VA	360 VA		1	20 A	RCPT-ROOMS	RN-2
RN-3	RCPT-BISHOP	20 A	1		900 VA	360 VA	1	20 A	RCPT-MAT'L CNTR	RN-4
RN-5	RCPT-CLERKS	20 A	1			1080 VA	540 VA	1	20 A	RCPT-MAT'L CNTR	RN-6
RN-7	RCPT-RM,FYR,HALL	20 A	1	540 VA	180 VA			1	20 A	RCPT-MAT'L CNTR	RN-8
RN-9	RCPT-CHAPEL	20 A	1		360 VA	720 VA		1	20 A	RCPT-RESTROOMS	RN-10
RN-11	PROJ SCREEN	20 A	1			708 VA	720 VA	1	20 A	RCPT-ROOM	RN-12
RN-13	RCPT-ROSTRUM	20 A	1	720 VA	720 VA			1	20 A	RCPT-HALL,CULT	RN-14
RN-15	ORGAN BOX	20 A	1		180 VA	180 VA		1	20 A	DRINKING FTN	RN-16
RN-17	Spare	20 A	1			0 VA	540 VA	1	20 A	RCPT-HALL,CULT	RN-18
RN-19	RCPT-VST,RM,CST	20 A	1	720 VA	1150 VA			1	20 A	BBALL STANDARD	RN-20
RN-21	RCPT-ROOMS	20 A	1		900 VA	1150 VA		1	20 A	BBALL STANDARD	RN-22
RN-23	RCPT-PRIM,ENTRY	20 A	1			1440 VA	0 VA	1	20 A	Spare	RN-24
RN-25	Spare	20 A	1	0 VA	--			1	--	Space	RN-26
RN-27	Spare	20 A	1		0 VA	--		1	--	Space	RN-28
RN-29	Spare	20 A	1			0 VA	--	1	--	Space	RN-30
			Total Load:	5290 VA	4750 VA	5028 VA				
			Tot. Amps:	44 A	40 A	42 A				

Legend:

Load Classification	Connected Load	Demand Factor	Est. Demand	Panel Totals	
Appliance	180 VA	100.00%	180 VA		
Other	108 VA	100.00%	108 VA	**Total Conn. Load:**	15068 VA
Power	780 VA	100.00%	780 VA	**Total Est. Demand:**	3308 VA
Receptacle	14000 VA	16.00%	2240 VA	**Total Conn.:**	42 A
				Total Est. Demand:	9 A

Notes:
1. PROVIDE ARC-FLASH HAZARD LABELS PER SPECIFICATION.

BRANCH PANEL RS

Location: EQUIPMENT PLATFORM 201 **Volts:** 120/208 Wye **A.I.C. Rating:** 22000
Supply From: PANEL M **Phases:** 3 **Mains Type:** MLO
Mounting: SURFACE **Wires:** 4 **Mains Rating:** 100 A
Enclosure: Type 1

CKT	Circuit Description	Trip	Poles	A	B	C	Poles	Trip	Circuit Description	CKT
RS-1	RCPT-BISHOP	20 A	1	900 VA	0 VA					
RS-3	RCPT-BISHOP	20 A	1		900 VA	0 VA	2	20 A	Spare	RS-4
RS-5	RCPT-CLERKS	20 A	1			1080 VA	0 VA	1	20 A	Spare	RS-6
RS-7	RCPT-MOTH,HALL	20 A	1	540 VA	360 VA			1	20 A	RCPT-SERVING	RS-8
RS-9	FACP	20 A	1		600 VA	180 VA		1	20 A	RCPT-SERVING	RS-10
RS-11	AUTO DOOR OPEN	20 A	1			600 VA	180 VA	1	20 A	RCPT-SERVING	RS-12
RS-13	RCPT-RM,STR,EXT	20 A	1	360 VA	180 VA			1	20 A	RCPT-FRIDGE	RS-14
RS-15	RCPT-ROOMS	20 A	1		900 VA	180 VA		1	20 A	RCPT-SERVING	RS-16
RS-17	RCPT-FYR,RM,ENT	20 A	1			720 VA	180 VA	1	20 A	DRINKING FTN	RS-18
RS-19	RCPT-CHAPEL	20 A	1	540 VA	0 VA			1	20 A	Spare	RS-20
RS-21	RCPT-CULT,STOR	20 A	1		720 VA	0 VA		1	20 A	Spare	RS-22
RS-23	RCPT-HALL,ENTRY	20 A	1			540 VA	1440 VA	1	20 A	RCPT-RELIEF SOC	RS-24
RS-25	Spare	20 A	1	0 VA	--			1	--	Space	RS-26
RS-27	Spare	20 A	1		0 VA	--		1	--	Space	RS-28
RS-29	Spare	20 A	1			0 VA	--	1	--	Space	RS-30
			Total Load:	2880 VA	3480 VA	4740 VA				
			Tot. Amps:	24 A	30 A	40 A				

Legend:

Load Classification	Connected Load	Demand Factor	Est. Demand	Panel Totals	
Appliance	180 VA	100.00%	180 VA		
Power	1200 VA	100.00%	1200 VA	**Total Conn. Load:**	11100 VA
Receptacle	9720 VA	18.00%	1750 VA	**Total Est. Demand:**	3130 VA
				Total Conn.:	31 A
				Total Est. Demand:	9 A

Notes:
1. PROVIDE ARC-FLASH HAZARD LABELS PER SPECIFICATION.

bhd ARCHITECTS
www.bhdarchitects.com
Phone 801.571.0010
Fax 801.571.0303
Toll Free 888.571.0010
65 East Wadsworth Park Drive
Suite 205 Draper, Utah 84020

LICENSED PROFESSIONAL ENGINEER
No. 5148728
DAVID G. HINCKLEY
8-15-24
STATE OF UTAH

SPECTRUM ENGINEERS
324 S. State St., Suite 400
Salt Lake City, UT 84111
800-678-7077
801-328-5151
fax: 801-328-5155
www.spectrum-engineers.com

THE CHURCH OF JESUS CHRIST OF LATTER-DAY SAINTS

Springwater 9
Vineyard UT Springwater Stake
Approx. 542 South Geneva Road
Vineyard, Utah 84059

Owner #: 502-2004
Plan Series: C300-MH-11
County Parcel: 39:228:0001
BHD #: 2346
Date: 15 Aug 2024

Drawing Issue and Revision Schedule

#	Date	Description
1	15 Aug 2024	Bid Documents

PANEL SCHEDULES

E602

Autodesk Docs://240510 - Orem Vineyard Springwater Granger 300 Meetinghouse/240510-Elec Central.rvt
8/15/2024 11:48:20 AM

BRANCH PANEL LC1

Location: EXTERIOR
Supply From: PANEL M
Mounting: Surface
Enclosure: Type 3R

Volts: 120/208 Wye
Phases: 3
Wires: 4

A.I.C. Rating: 22000
Mains Type: MLO
Mains Rating: 150 A

CKT	Circuit Description	Trip	Poles	A	B	C	Poles	Trip	Circuit Description	CKT
LC1-1	COMPRESSOR UNIT CU-2a	50 A	2	3318 VA	3318 VA		2	50 A	COMPRESSOR UNIT CU-3	LC1-2
LC1-3					3318 VA	3318 VA				LC1-4
LC1-5	COMPRESSOR UNIT CU-7	45 A	2			2923 VA	2	45 A	COMPRESSOR UNIT CU-9	LC1-6
LC1-7				2923 VA	2923 VA					LC1-8
LC1-9	COMPRESSOR UNIT CU-11	45 A	2		2923 VA	0 VA	1	20 A	Spare	LC1-10
LC1-11						2923 VA	1	20 A	RCPT-EXTERIOR	LC1-12
LC1-13	Spare	40 A	2	0 VA	0 VA		2	50 A	Spare	LC1-14
LC1-15					0 VA	0 VA				LC1-16
				Total Load:	12480 VA	9558 VA	8912 VA			
				Tot. Amps:	105 A	80 A	74 A			

Legend:

Load Classification	Connected Load	Demand Factor	Est. Demand	Panel Totals	
Cooling	30805 VA	100.00%	30805 VA		
Receptacle	180 VA	80.00%	144 VA	**Total Conn. Load:**	30949 VA
				Total Est. Demand:	30920 VA
				Total Conn.:	86 A
				Total Est. Demand:	86 A

Notes:
1. ALL LOAD CENTERS SHALL HAVE SPACES AS SHOWN TO ALLOW FOR FUTURE ADDITION OF CONDENSING UNIT ANTI-THEFT SYSTEM (WHEN THIS SYSTEM IS ADDED THE LOAD CENTER WILL FEED A LOW-VOLTAGE TRANSFORMER FOR THE ANTI-THEFT SYSTEM). 2. PROVIDE ARC-FLASH HAZARD LABELS PER SPECIFICATION.

BRANCH PANEL LC2

Location: EXTERIOR
Supply From: PANEL M
Mounting: Surface
Enclosure: Type 3R

Volts: 120/208 Wye
Phases: 3
Wires: 4

A.I.C. Rating: 22000
Mains Type: MLO
Mains Rating: 100 A

CKT	Circuit Description	Trip	Poles	A	B	C	Poles	Trip	Circuit Description	CKT
LC2-1	COMPRESSOR UNIT CU-1a	45 A	2	2923 VA	180 VA		1	20 A	RCPT-EXTERIOR	LC2-2
LC2-3					2923 VA	0 VA	1	20 A	Spare	LC2-4
LC2-5	COMPRESSOR UNIT CU-1b	45 A	2			2923 VA	0 VA	2	40 A	Spare	LC2-6
LC2-7				2923 VA	0 VA						LC2-8
LC2-9	COMPRESSOR UNIT CU-5	30 A	2		1945 VA	0 VA	2	50 A	Spare	LC2-10
LC2-11						1945 VA	0 VA				LC2-12
				Total Load:	5990 VA	4867 VA	4867 VA			
				Tot. Amps:	50 A	41 A	41 A			

Legend:

Load Classification	Connected Load	Demand Factor	Est. Demand	Panel Totals	
Cooling	15579 VA	100.00%	15579 VA		
Receptacle	180 VA	80.00%	144 VA	**Total Conn. Load:**	15723 VA
				Total Est. Demand:	15694 VA
				Total Conn.:	44 A
				Total Est. Demand:	44 A

Notes:
1. ALL LOAD CENTERS SHALL HAVE SPACES AS SHOWN TO ALLOW FOR FUTURE ADDITION OF CONDENSING UNIT ANTI-THEFT SYSTEM (WHEN THIS SYSTEM IS ADDED THE LOAD CENTER WILL FEED A LOW-VOLTAGE TRANSFORMER FOR THE ANTI-THEFT SYSTEM). 2. PROVIDE ARC-FLASH HAZARD LABELS PER SPECIFICATION.

Switchboard: PANEL M

Location: TECH 136
Supply From:
Mounting: Surface
Enclosure: Type 3R

Volts: 120/208 Wye
Phases: 3
Wires: 4

A.I.C. Rating: 22000
Mains Type: MCB
Mains Rating: 600 A
MCB Rating: 600 A

Notes:
1. PROVIDE METER SOCKET AND CT CABINET PER LOCAL UTILITY REQUIREMENTS.
2. PROVIDE UNDERGROUND PARALLEL SERVICE TO THE SWITCHBOARD.
3. PROVIDE ALUMINUM BUSES
4. PANEL TO BE SERIES RATED.
5. ALL BREAKERS TO BE CAPABLE OF BEING LOCKED IN THE OFF POSITION.
6. PROVIDE A POWER QUALITY METER, CT'S AND PT'S MEASURING THE PANEL'S SERVICE ENTRANCE CONDUCTORS. TIE THE POWER QUALITY METER TO THE BUILDING MANAGEMENT SYSTEM.
7. PROVIDE REAL TIME ENERGY METERING ON EVERY BRANCH CIRCUIT IN THIS PANEL. TIE THE METERS TO THE BUILDING MANAGEMENT SYSTEM.

CKT	Circuit Description	# of Poles	Frame Size	Trip Rating	Load	Remarks
M-1	SPD	3	100 A	30 A	0 VA	
M-2	PANEL LS	3	100 A	70 A	9583 VA	
M-3	PANEL LN	3	100 A	70 A	6425 VA	
M-4	PANEL LC1	3	200 A	125 A	30949 VA	
M-5	PANEL LC2	3	100 A	100 A	15723 VA	
M-6	PANEL RN	3	100 A	125 A	15068 VA	
M-7	PANEL LC3	3	200 A	125 A	32987 VA	
M-8	PANEL LC4	3	100 A	100 A	15723 VA	
M-9	PANEL MN	3	100 A	100 A	20013 VA	
M-10	PANEL MS	3	200 A	150 A	34380 VA	
M-11	PANEL RS	3	100 A	125 A	11100 VA	
M-12	Spare	3	--	--	--	
				Total Conn. Load:	182921 VA	
				Total Amps:	508 A	

Legend:

Load Classification	Connected Load	Demand Factor	Est. Demand	Panel Totals	
Lighting	4443 VA	100.00%	4443 VA		
Other	30078 VA	100.00%	30078 VA	**Total Conn. Load:**	182921 VA
Power	22832 VA	100.00%	22832 VA	**Total Est. Demand:**	160588 VA
				Total Conn. Current:	508 A
				Total Est. Dem. Curr.:	446 A

Notes:
1. PROVIDE ARC-FLASH HAZARD LABELS PER SPECIFICATION.

BRANCH PANEL LC3

Location: EXTERIOR
Supply From: PANEL M
Mounting: Surface
Enclosure: Type 3R

Volts: 120/208 Wye
Phases: 3
Wires: 4

A.I.C. Rating: 22000
Mains Type: MLO
Mains Rating: 125 A

CKT	Circuit Description	Trip	Poles	A	B	C	Poles	Trip	Circuit Description	CKT
LC3-1	COMPRESSOR UNIT CU-2b	50 A	2	3318 VA	2288 VA		2	35 A	COMPRESSOR UNIT CU-8	LC3-2
LC3-3					3318 VA	2288 VA				LC3-4
LC3-5	COMPRESSOR UNIT CU-4	35 A	2			2288 VA	2	45 A	COMPRESSOR UNIT CU-10	LC3-6
LC3-7				2288 VA	2923 VA					LC3-8
LC3-9	COMPRESSOR UNIT CU-13	35 A	2		2288 VA	3318 VA	2	50 A	COMPRESSOR UNIT CU-12	LC3-10
LC3-11						2288 VA	3318 VA				LC3-12
LC3-13	RCPT-EXTERIOR	20 A	1	180 VA	0 VA		1	20 A	Spare	LC3-14
LC3-15	Spare	40 A	2		0 VA	0 VA	2	50 A	Spare	LC3-16
LC3-17						0 VA	0 VA				LC3-18
				Total Load:	10961 VA	11211 VA	10816 VA			
				Tot. Amps:	92 A	94 A	90 A			

Legend:

Load Classification	Connected Load	Demand Factor	Est. Demand	Panel Totals	
Cooling	32843 VA	100.00%	32843 VA		
Receptacle	180 VA	80.00%	144 VA	**Total Conn. Load:**	32987 VA
				Total Est. Demand:	32958 VA
				Total Conn.:	92 A
				Total Est. Demand:	91 A

Notes:
1. ALL LOAD CENTERS SHALL HAVE SPACES AS SHOWN TO ALLOW FOR FUTURE ADDITION OF CONDENSING UNIT ANTI-THEFT SYSTEM (WHEN THIS SYSTEM IS ADDED THE LOAD CENTER WILL FEED A LOW-VOLTAGE TRANSFORMER FOR THE ANTI-THEFT SYSTEM). 2. PROVIDE ARC-FLASH HAZARD LABELS PER SPECIFICATION.

BRANCH PANEL LC4

Location: EXTERIOR
Supply From: PANEL M
Mounting: Surface
Enclosure: Type 3R

Volts: 120/208 Wye
Phases: 3
Wires: 4

A.I.C. Rating: 22000
Mains Type: MLO
Mains Rating: 100 A

CKT	Circuit Description	Trip	Poles	A	B	C	Poles	Trip	Circuit Description	CKT
LC4-1	COMPRESSOR UNIT CU-1c	45 A	2	2923 VA	180 VA		1	20 A	RCPT-EXTERIOR	LC4-2
LC4-3					2923 VA	0 VA	1	20 A	Spare	LC4-4
LC4-5	COMPRESSOR UNIT CU-1d	45 A	2			2923 VA	0 VA	2	40 A	Spare	LC4-6
LC4-7				2923 VA	0 VA						LC4-8
LC4-9	COMPRESSOR UNIT CU-6	30 A	2		1945 VA	0 VA	2	50 A	Spare	LC4-10
LC4-11						1945 VA	0 VA				LC4-12
				Total Load:	5990 VA	4867 VA	4867 VA			
				Tot. Amps:	50 A	41 A	41 A			

Legend:

Load Classification	Connected Load	Demand Factor	Est. Demand	Panel Totals	
Cooling	15579 VA	100.00%	15579 VA		
Receptacle	180 VA	80.00%	144 VA	**Total Conn. Load:**	15723 VA
				Total Est. Demand:	15694 VA
				Total Conn.:	44 A
				Total Est. Demand:	44 A

Notes:
1. ALL LOAD CENTERS SHALL HAVE SPACES AS SHOWN TO ALLOW FOR FUTURE ADDITION OF CONDENSING UNIT ANTI-THEFT SYSTEM (WHEN THIS SYSTEM IS ADDED THE LOAD CENTER WILL FEED A LOW-VOLTAGE TRANSFORMER FOR THE ANTI-THEFT SYSTEM). 2. PROVIDE ARC-FLASH HAZARD LABELS PER SPECIFICATION.

bhd ARCHITECTS
www.bhdarchitects.com
Phone 801.571.0010
Fax 801.571.0303
Toll Free 888.571.0010
65 East Wadsworth Park Drive
Suite 205 Draper, Utah 84020

LICENSED PROFESSIONAL ENGINEER
No. 5148728
DAVID G. HINCKLEY
8-15-24
STATE OF UTAH

SPECTRUM ENGINEERS
324 S. State St., Suite 400
Salt Lake City, UT 84111
800-678-7077
801-328-5151
fax: 801-328-5155
www.spectrum-engineers.com

THE CHURCH OF JESUS CHRIST OF LATTER-DAY SAINTS

Springwater 9
Vineyard UT Springwater Stake

Approx. 542 South Geneva Road
Vineyard, Utah 84059

Date: 15 Aug 2024
BHD #: 2346
County Parcel: 39-228:0001
Plan Series: C300-MH-11
Owner #: 502-2004

Drawing Issue and Revision Schedule

#	Date	Description
1	15 Aug 2024	Bid Documents

PANEL SCHEDULES

E603

Autodesk Docs://240510 - Orem Vineyard Springwater Granger 300 Meetinghouse/240510-Elec Central.rvt
8/15/2024 11:48:23 AM

LIGHTING FIXTURE SCHEDULE

Type Mark	Description	Lamp	Initial Color Temperature	Electrical Data	Manufacturer1	Model1	Manufacturer2	Model2	Manufacturer3	Model3	Manufacturer4	Model4	Manufacturer5	Model5	Manufacturer6	Model6	Manufacturer7	Model7	Manufacturer8	Model8
F1	1'x4' RECESSED MOUNTED FLAT LED PANEL.	40W LED	3500 K	120 V/1-40 VA	DAY-BRITE	1-FXP-38L-835-4-DS-UN V-DIM-FMA14FP	METALUX	FPX-DF-14W-U	HE WILLIAMS	BP-1-4-LS-8-CS-DFK-124 8W	LSI	SFP14-LED-40-UE-DIM-35 -642793	EELP	VLFP6-B-14-40L-QT-35/VLF P6-B-DWK14	COLUMBIA	CFP14-4035/FK-14	MERCURY	MP15-1-17-OCT-A-ELBS-UNI-LBF	SYLVANIA	60307/70132
F2	0.14 THICK ACRI-TUF LENS. 2'x4' SURFACE MOUNTED LOW PROFILE TROFFER WITH STEEL HOUSING.	65W LED	3500 K	120 V/1-65 VA	DAY-BRITE	2SML-74L-835-4-FS-19F-UNV-DIM	METALUX	24GR-LD5-72-A19/156-UNV-L835-CD1-U-SK-WT	HE WILLIAMS	12-4-L84/835-FAF 12140-(L72)-DIM-UNV -A2-MVOLT-SP	PACO LTG	PUSU-R-24-LED-50-35-S1	LITHONIA	2TLX4-72L-FW-A 19-EZ1-LP8	COLUMBIA	LJT24-35VLSM-FSA19-ED1U 0-ED1U-ELL14			COLUMBIA	LJT24-35VLSM-FSAT1214 0-ED1U-ELL14
F3	2' WALL MOUNTED VANITY FIXTURE WITH ACRYLIC DIFFUSER. MOUNT AT CEILING.	26W LED	3500 K	120 V/1-20 VA	LSI	W442-LED-SS-35K-UE	METALUX	2BCLED-LD4-16SL-F-UNV-L835-CD1-U	HE WILLIAMS	29-2-L27/835-AF-(L15)-DI M-UNV	L.A. LIGHTING	BAN100-3-2L-FP A 1DRDM-UNV-1-835	LITHONIA	BLWP2 20L ADP GZ10 LP835	COLUMBIA	CWM2-35VWSM-FRFP-ED U				
F4	4' WALL MOUNTED VANITY FIXTURE WITH ACRYLIC DIFFUSER. MOUNT AT CEILING.	45W LED	3500 K	120 V/1-27 VA	LSI	W444-LED-SS-35K-UE	METALUX	4BCLED-LD4-24HL-F-UNV-L835-CD1-U	HE WILLIAMS	29-4-L54/835-AF-(L30)-DI M-UNV	L.A. LIGHTING	BAN100-6-4L-FP A 1DRDM-UNV-1-835	LITHONIA	BLWP4 40L ADP GZ10 LP835	COLUMBIA	CWM4-35VWSM-FRFP-ED U				
F5	4' SINGLE LAMP STRIP LIGHT. SURFACE OR CHAIN SUSPENDED. WITH WIRE GUARD.	50W LED	3500 K	120 V/1-28 VA	DAY-BRITE	FSS430L835-UNV-DIM / FSSWG4	METALUX	4SNX-37SL-LW-UNV-L835-CD1-U-WG-SNX/SN-4FT-BAYC-CHAIN/SET-U	HE WILLIAMS	76-4-L53/835-WG-7614 -DIM-UNV	LSI	SDL4-LED-30L-FL-UNV DIM1-35K-80CRI	LITHONIA	CSS L48 ALO3 MVOLT SWW3 80CRI	COLUMBIA	MPS4-35VW-FW-EDU CSHC		LNS-4FT-25-T1-F-G2/WIREGUARD		
F6	COVE STRIP 2' FIXTURE.	10W LED	3500 K	120 V/1-40 VA	LEDALITE	TC08L83515WN-SN-02-D E	COOPER IO LED	LM-05L-935-120-ID-UNV-S-SM-STD-XX 80CRI WH	HE WILLIAMS	CXC-2'00-L4/835-25-D-DI M-UNV			FOCAL POINT	FCOL-HN-500LF-35K-1C-UN V-LD1-CV-2'	LITECONTROL	30-CC-AI-2'-WHS-35K9-I05 0-D01-UNV		CUS-24"-LSC1-550LP-DIM10-MVOLT-120X120D-35K-90		
F7	COVE STRIP 4' FIXTURE 3000 LM.	20W LED	3500 K	120 V/1-28 VA	LEDALITE	TC08L83515WN-SN-04-D E	COOPER IO LED	LM-05L-935-120-ID-UNV-S-SM-STD-XX	HE WILLIAMS	CXC-4'00-L6/835-25-D-DI M-UNV			FOCAL POINT	FCOL-HN-500LF-35K-1C-UN V-LD1-CV-4' 35K 80CRI WH	LITECONTROL	30-CC-AI-4'-WHS-35K9-I05 0-D01-UNV	LUMENSENSE	4-LSC1-550LP-DIM10-MVOLT-120X120D-35K-90		
F8	COVE STRIP 4' FIXTURE 5000 LM.	28W LED	3500 K	120 V/1-45 VA	LEDALITE	TC08L83515WN-SN-04-D E	LITHONIA	LM-05L-935-120-ID-UNV-S-SM-STD-XX	HE WILLIAMS	CXC-4'00-L6/835-25-D-DI M-UNV			FOCAL POINT	FCOL-HN-500LF-35K-1C-UN V-LD1-CV-4' 35K 80CRI WH	LITECONTROL	30-CC-AI-4'-WHS-35K9-I05 0-D01-UNV	LUMENSENSE	4-LSC1-1100LP-DIM10-MVOLT-120X120D-35K-90		
F10	6" APERTURE RECESSED DOWNLIGHT WITH LED RETROFIT KIT AND SHALLOW HOUSING. WHITE TRIM AND LENSE. 1-1/4" CEILING FLANGE. RIM.	13W LED 1000 LM	3500 K	120 V/1-40 VA	GE	LRXBR61X9CWVQ/FRA ME6R	HALO	LT560WH12930E7ICAT	LITON	CH618UE-D10 CR6L22SW-T30	ELITE	RL679-1100L-CCT	LITHONIA	WF6 LED 27K30K35K MVOLT 90CRI MW	DMF	DRDH-N-IC-6-10O/ DRD2M-10-9-30-A DRD2T-R-6-S-WH	PRESCOLITE	LBRA-6RD-T-10L-CS9-WH / LBRA-RD-H		
F11	8" APERTURE DOWNLIGHT WITH WHITE TRIM. DAMP LOCATION RATED.	27W LED 2000 LM	4000 K	120 V/1-30 VA	GE	LRXR818840MD	PEACHTREE	8BLRD-25-35K-80-SH-TRW-120	SPECTRUM	RDF08LEDXT 30L 40K-MD EX BH27 RD8FXT SG	ELCO	E8LF-U-20-D/E810L-2040 W	LITON	CH828UE-D10 CR8L22SW-T30	HALO	PR820D010 PR8M34MDMW				
F11b	6" APERTURE DOWNLIGHT WITH WHITE TRIM. DAMP LOCATION RATED.	LED 2000 LM	3500 K	120 V/1-30 VA	LIGHTOLIER	6-R-N-P6R-DL-20-935-M-CC-Z10-U	HALO	PR62D010-PR6M34MDMW	HE WILLIAMS	6DR-L40/835-(L20)-DIM-U NV-OW-OF-CS-N-F1	ELCO	E6LFU20D-E610L2035W	LITHONIA	LBR6-AL02-20LM-35K-AR-L SS-MWD-MVOLT	PRESCOLITE	LF6SL-6LFSL20L35K				
F12	30" DIAMETER DOUBLE SEALED BOWL FIXTURE WITH MACHINED ALUMINUM TRIM RING. WITH FULLY SEALEDDOUBLE BOWL BOTTOM OF FIXTURES ELEV. = 113'-0" 50% UPLIGHT, 50% DOWNLIGHT.	96W LED 10,000 LM	3500 K	120 V/1-180 VA	VICTOR ILLUMINATING	VLD4130-ACC 90LED 35K-SA-XX-120-SD-DM7	EVERGREEN	SHP-RBR-P30-136L-9-WF9-35K-DIM-CLPT	LIGHTWAY	MONH-30-LED-L1A-2 SCBA-WSA	CRAFT-METAL	SC3612L-EEF-120/277 PC-SA-AD-D1-LDS DBL BOWL	SPECTRUM	SPEC18-0004C	LE LAMPISTE	BWL-S-D-36/XX/36-LED 106-DBWL-LDS-CLA-SA				
F13	36" DIAMETER DOUBLE SEALED BOWL FIXTURE WITH MACHINED ALUMINUM TRIM RING. FULLY SEALED DOUBLE BOWL BOTTOM OF FIXTURES ELEV. = 112'-0". MINIMUM LUMENS 10,000.	133W 14,000 LM	3500 K	120 V/1-270 VA	VICTOR ILLUMINATING	VLD4136-ACC 87LED 35K-SA-XX-120-SD-DM7	EVERGREEN	SHP-RBR-P36-156L-9-WF9-35K-DIM-CLPT	LIGHTWAY	MONH-36-LED-L1A-2-SC BA-WSA	CRAFT-METAL	SC1809S-EDS-120/277 PC-SA-AD-D1-LED	SPECTRUM	SPEC18-0007B	LE LAMPISTE	BWL-WS-D-13/7/5-LED 13-LDS-CLA-SA				
F14	WALL SCONCE WITH SEMISPHERICAL ACRYLIC LENS AND ALUMINUM TRIM RING TO MATCH PENDANT FIXTURES. SEE ARCHITECTURAL FOR MOUNTING.	LED	3500 K	CB3430 120 V/1-30 VA	MANNING	CBI-2749-BA-1L17T30 D0-120-WH-LDS	SPECTRUM	SPEC18-0007D	STONCO	LPW16-30-WW-G3- UNV-SCBA	CRAFT-METAL	SC1809S-EDS-120-D1 WM-WA-SA-FD	LE' LAMPISTE	BWL-WS-D-13/7/5-LED 13-LDS-CLA-SA	EVERGREEN	VE-WCSM-12-12W-9-WF	VICTOR	VWS4016-13LED-3K SA-120-DM7		
F17	SURFACE CYLINDRICAL SPOT LAMP HOLDER COMPATIBLE WITH TRACK.	1-PAR 38 LED REPLACEMENT 2000 LM DIMMABLE REPLACEMENT 2000 LM DIMMABLE (i.e. OSRAM 79363)	3500 K	120 V/1-28 VA	NORA	NTH-131W / NT-366W	HALO	L80815FL9030P	ELCO	ET650W/EP811W	SISTEMALUX	1590-835-45-120-01-LTE	JUNO	T283L 35K 80CRI PDIM FL WH	LITON	LT850-W/ LP913W				
F19	SURFACE CERAMIC LAMP HOLDER. PROVIDE METAL WIRE GUARD.	1-A19 LED REPLACEMENT 1000 LM	3500 K	120 V/1-60 VA	LEVITON	49875	PASS & SEYMOUR	274	ARROW-HART	604	BRYANT	5228							SYLVANIA	70956
F21	WALL MOUNTED. WET LOCATION FINISH TO MATCH PARKING LOT FIXTURES. PROVIDE FIXTURE WITH INTEGRAL BACK BOX. PROVIDE WITH VANDAL RESISTANT HARDWARE.	27W LED 2000 LM	3000 K	120 V/1-40 VA	TRACELITE	TLED112P-42-VS-4K-WH -TRH	LUMARK	AXCS2A DDBXD	STONCO	LPW16-58-WW-G3 UNV-SCBA	LSI	AWL-CBA-EP	LITHONIA	WSQ LED P1 40K SR3 120 BBW PE	HUBBELL	SG1-20-4K7-3-UNV-A4-WH S				
F23	2'x4' RECESSED FIXTURE WITH CENTER ACRYLIC LENS.	45W LED 5000 LM	3500 K	120 V/1-50 VA	ALPHALITE	ILT-CB-24L(45S2)/835-F K	LUMARK	24CZ2-45-UNV-L835-CD1 U-FK	HE WILLIAMS	LT24-L52/835-AF-DIM-UN V-FK	LSI	LPASC24-LED-48 LUNV-DI M1-35-FK24	LITHONIA	BLC 2X4 5000LM 35K ADSM DGA24	COLUMBIA	LCAT24-35MLG-EDU FK24	ATG	ECRT24-25W-T1-R0-R1/EM	SYLVANIA	60878
F24	EXIT SIGN	5W LED		120 V/1-1 VA	COMPASS	CEG	EVENLITE	TLX-EM-GU-W	HE WILLIAMS	EXIT-G-EM-WHT-D	LSI	EX G U WB WH	ISOLITE	RL-EM-G-WH-(WG2)	CHLORIDE	VEGWEM	LIFE SAFETY LIGHTING	LSX2GWEM/LSCS-1	SYLVANIA	60762
F25	6" RECESSED WALLWASHING CANLIGHT WITH LED RETROFIT KIT AND SHALLOW HOUSING. WHITE TRIM AND LENSE. 1-1/4" CEILING FLANGE. RIM.	13W LED 1000 LM	3500 K	120 V/1-40 VA	HEWilliams	<va6AR-L10-90-35-UNV-A-W-OFries>	Lightolier	6RR-LW-10-935-W-CC-U	ELCO	V6OFCRWW-u-11-35K-F6160-SGC-HCR	Vantage	V6OFCRWW-u-11-35K-F6160-SGC-HCR	Halo	HC610-HM6052593561RWWH						

bhd ARCHITECTS
www.bhdarchitects.com
Phone 801.571.0010
Fax 801.571.0303
Toll Free 888.571.0010
65 East Wadsworth Park Drive
Suite 205 Draper, Utah 84020

LICENSED PROFESSIONAL ENGINEER
No. 5148728
DAVID G. HINCKLEY
8-15-24
STATE OF UTAH

SPECTRUM ENGINEERS
324 S. State St., Suite 400
Salt Lake City, UT 84111
800-678-7077
801-328-5151
fax: 801-328-5155
www.spectrum-engineers.com

THE CHURCH OF JESUS CHRIST OF LATTER-DAY SAINTS

Springwater 9
Vineyard UT Springwater Stake

Approx. 542 South Geneva Road
Vineyard, Utah 84059

Date: 15 Aug 2024
BHD #: 2346
County Parcel: 39-228:0001
Plan Series: G300-MH-11
Owner #: 502-2004

Drawing Issue and Revision Schedule

#	Date	Description
1	15 Aug 2024	Bid Documents

LIGHTING FIXTURE SCHEDULE

E604

Autodesk Docs://240510 - Orem Vineyard Springwater Granger 300 Meetinghouse/240510-Elec Central.rvt
8/15/2024 11:48:25 AM

Distribution Wiring Schedule

Load Name	# of Runs	Wire Size	Wire Type	Breaker Rating	True Current	Neutral Rating	Bussing
Short Circuit Rating							
PANEL LC1	1	3-#2/0, 1-#2/0, 1-#4	Al XHHW2	125 A	69 A	100%	ALUMINUM
22000							
PANEL LC2	1	3-#1/0, 1-#1/0, 1-#4	Al XHHW2	100 A	35 A	100%	ALUMINUM
22000							
PANEL LC3	1	3-#2/0, 1-#2/0, 1-#4	Al XHHW2	125 A	73 A	100%	ALUMINUM
22000							
PANEL LC4	1	3-#1/0, 1-#1/0, 1-#4	Al XHHW2	100 A	35 A	100%	ALUMINUM
22000							
PANEL LN	1	3-#4, 1-#4, 1-#6	Cu THHN	70 A	19 A	100%	ALUMINUM
22000							
PANEL LS	1	3-#4, 1-#4, 1-#6	Cu THHN	70 A	26 A	100%	ALUMINUM
22000							
PANEL M	2	2 runs of 3-#500, 1-#500, 1-#2/0	Al XHHW2	600 A	491 A	100%	ALUMINUM
22000							
PANEL MN	1	3-#1/0, 1-#1/0, 1-#4	Al XHHW2	100 A	56 A	100%	ALUMINUM
22000							
PANEL MS	1	3-#3/0, 1-#3/0, 1-#4	Al XHHW2	150 A	105 A	100%	ALUMINUM
22000							
PANEL RN	1	3-#1/0, 1-#1/0, 1-#4	Al XHHW2	100 A	42 A	100%	ALUMINUM
22000							
PANEL RS	1	3-#1/0, 1-#1/0, 1-#4	Al XHHW2	100 A	31 A	100%	ALUMINUM
22000							

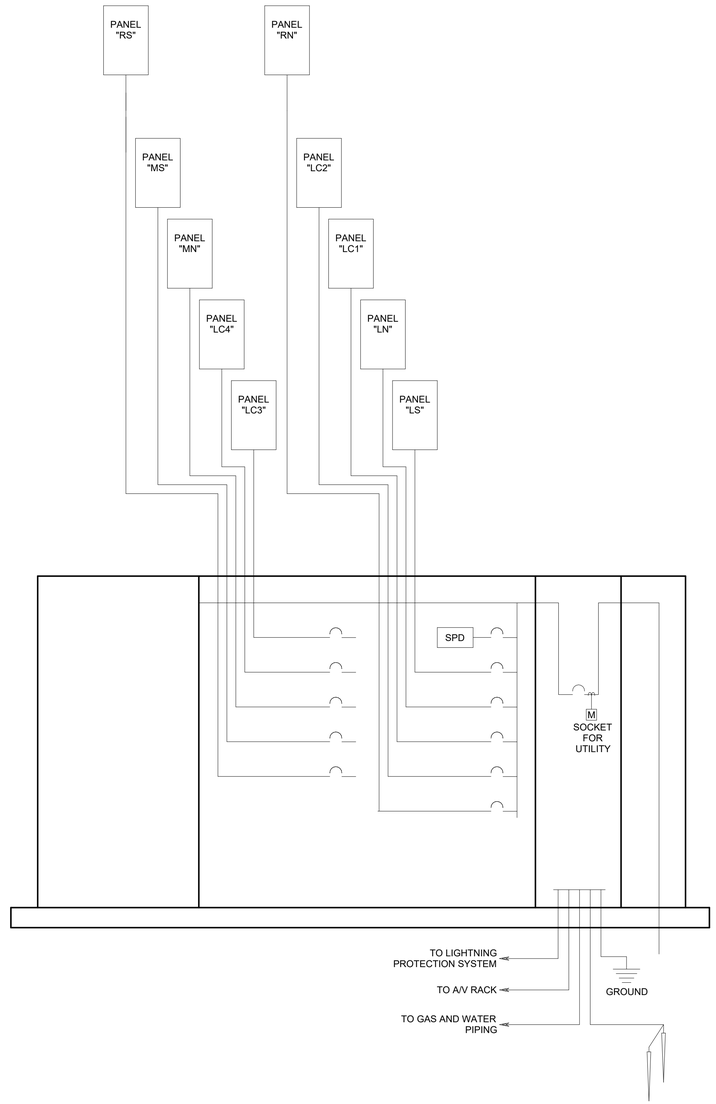

1 SINGLE LINE DIAGRAM
NOT TO SCALE

bhd ARCHITECTS
www.bhdarchitects.com
Phone 801.571.0010
Fax 801.571.0303
Toll Free 888.571.0010
65 East Wadsworth Park Drive
Suite 205 Draper, Utah 84020

LICENSED PROFESSIONAL ENGINEER
No. 5148728
DAVID G. HINCKLEY
8-15-24
STATE OF UTAH

SPECTRUM ENGINEERS
324 S. State St., Suite 400
Salt Lake City, UT 84111
800-678-7077
801-328-5151
fax: 801-328-5155
www.spectrum-engineers.com

THE CHURCH OF JESUS CHRIST OF LATTER-DAY SAINTS

Springwater 9
Vineyard UT Springwater Stake

Approx. 542 South Geneva Road
Vineyard, Utah 84059

Date: 15 Aug 2024
BHD #: 2346
County Parcel: 39-228:0001
Plan Series: G300-MH-11
Owner #: 502-2004

Drawing Issue and Revision Schedule

#	Date	Description
1	15 Aug 2024	Bid Documents

POWER SINGLE LINE DIAGRAM

E605

Autodesk Docs://240510 - Orem Vineyard Springwater Granger 300 Meetinghouse/240510-Elec Central.rvt
8/15/2024 11:48:27 AM

Chapel

BILL OF MATERIALS

LMRC_213 (1), Three Relay Room Controller
LMRC_212 (1), Two Relay Room Controller
LMRC_211 (3), One Relay Room Controller
LMPC_100-5 (4), Digital PIR Ceiling Mount Occupancy Sensor (extended height)
LMSW_101 (3), 1-Button Digital Wall Switch
LMSW_104 (1), 4-Button Digital Wall Switch

SEQUENCE OF OPERATION

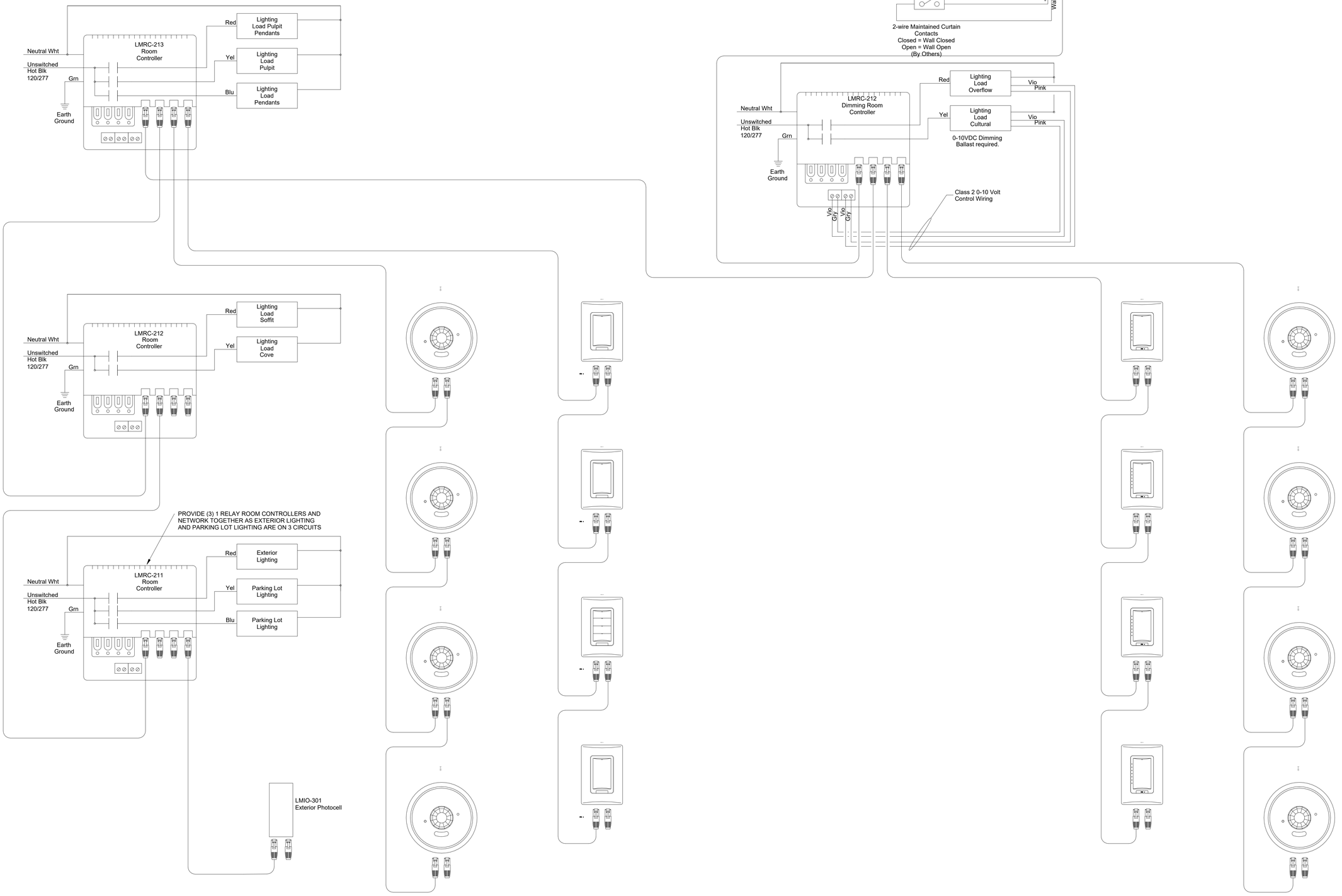

Overflow\Cultural

BILL OF MATERIALS

LMRC_212 (1), Two Relay Room Controller with 0-10v Dimming
LMRC_101 (1), Single Relay Room Controller
LMDM_101 (4), Digital Dimming Wall Switch
LMPC_100 (4), Digital PIR Ceiling Mount Occupancy Sensor
LMIO_102 (1), Digital Partition Interface

SEQUENCE OF OPERATION

bhd ARCHITECTS
www.bhdarchitects.com
Phone 801.571.0010
Fax 801.571.0303
Toll Free 888.571.0010
65 East Wadsworth Park Drive
Suite 205 Draper, Utah 84020

LICENSED PROFESSIONAL ENGINEER
No. 5148728
DAVID G. HINCKLEY
8-15-24
STATE OF UTAH

SPECTRUM ENGINEERS
324 S. State St., Suite 400
Salt Lake City, UT 84111
800-678-7077
801-328-5151
fax: 801-328-5155
www.spectrum-engineers.com

THE CHURCH OF JESUS CHRIST OF LATTER-DAY SAINTS

Springwater 9
Vineyard UT Springwater Stake

Approx. 542 South Geneva Road
Vineyard, Utah 84059

Date: 15 Aug 2024
BHD #: 2346
County Parcel: 39-228:0001
Plan Series: G300-MH-11
Owner #: 502-2004

Drawing Issue and Revision Schedule

#	Date	Description
1	15 Aug 2024	Bid Documents

LIGHTING CONTROL WIRING DIAGRAMS

E606

2 CHAPEL AND EXTERIOR LIGHTING CONTROL WIRING DIAGRAM
NO SCALE

1 OVERFLOW/CULTURAL CENTER LIGHTING CONTROL WIRING DIAGRAM
NO SCALE

Autodesk Docs://240510 - Orem Vineyard Springwater Granger 300 Meetinghouse/240510-Elec Central.rvt
8/15/2024 11:48:29 AM

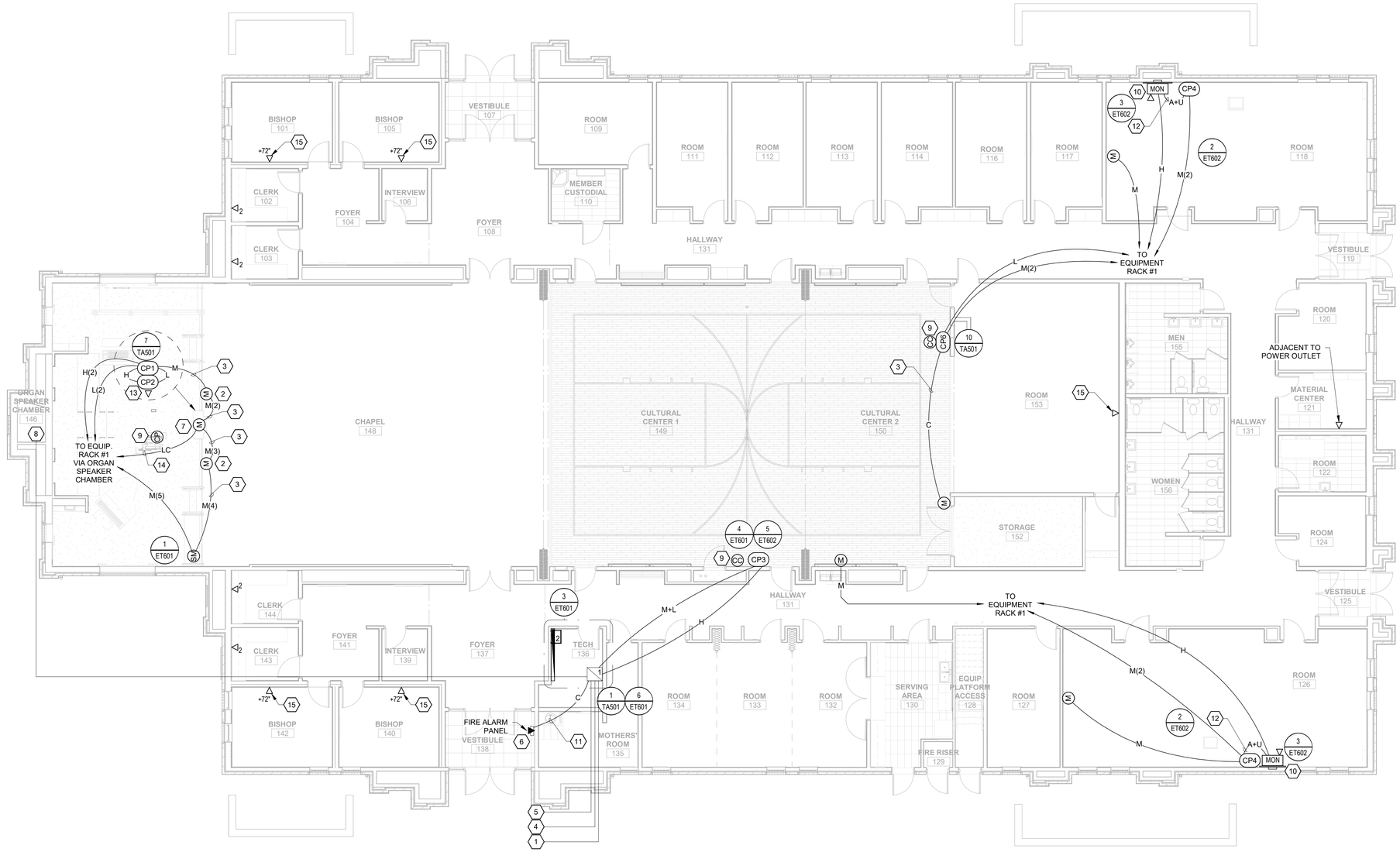

1 MAIN FLOOR AV ROUGH-IN FLOOR PLAN
1/8" = 1'-0"

SHEET KEYNOTES

1. PROVIDE GROUNDING COMPONENTS AS SHOWN ON DETAIL 4/ET602.
2. MOUNT JUNCTION BOXES HORIZONTALLY AND CENTERED IN HARDWOOD BASE ON FRONT OF ROSTRUM.
3. LOOP EXTRA CABLES THROUGH JUNCTION BOXES. DO NOT CUT.
4. INSTALL 4 EACH, 2.5" CONDUITS TO MECHANICAL PLATFORM WALKWAY. CONDUIT STUBS TO BE 4" ABOVE PLATFORM FLOOR NEXT TO WALL.
5. PROVIDE 1 EACH, 1.5" CONDUIT TO IRRIGATION CONTROLLER LOCATION WITH ONE 'D' TYPE CABLE AND DATA JACK.
6. PHONE CONNECTION TO FIRE ALARM PANEL.
7. SEE ARCHITECTURAL ROSTRUM MILLWORK DETAILS FOR ROUGH-IN AND MOUNTING OF PULPIT MICROPHONE.
8. PROVIDE 5 EACH 2" CONDUITS AND 1 EACH 1" CONDUIT FROM RACK #1 TO ORGAN SPEAKER CHAMBER. TERMINATE ALL ROSTRUM CONDUITS IN ORGAN CHAMBER.
9. SEE SHEET TT602 FOR CABLE TO CP AND CC. INSTALL CONDUITS PER GENERAL NOTE #1, SHEET ET101.
10. INSTALL 'HBR2' IN LARGE J-BOX BEHIND 'MON2'. SECURE AND NEATLY DRESS CABLES SO MOUNT MAY FULLY ARTICULATE WITHOUT DAMAGING CABLING.
11. FIRE ALARM SOUND SYSTEM MUTE CONNECTION.
12. 1.25" CONDUIT.
13. PROVIDE (2) 3-GANG BOXES, MOUNTED IN THE MILLWORK ON THE SIDE OF THE PULPIT. SEE DETAIL 7/TA501 FOR MOUNTING OF 'CP1', 'CP2' AND OTHER DEVICES IN PULPIT SIDE.
14. TO PULPIT MOTOR CONTROL.
15. INSTALL DATA JACK FOR TV MONITOR AT 72" AFF ADJACENT TO POWER OUTLET. AV INSTALLER TO INSTALL OWNER-FURNISHED MONITOR AND MOUNT IN THIS LOCATION.

GENERAL SHEET NOTES

1. EACH VOICE AND DATA OUTLET SHALL HAVE A MINIMUM 1" CONDUIT FROM OUTLET TO EQUIPMENT RACK #2 OR EQUIPMENT PLATFORM WALKWAY. INSTALLER IS TO BE FAMILIAR WITH, AND COMPLY WITH THE ANSI/TIA/EIA/596-C STANDARDS. CONDUITS SHALL HAVE A TOTAL DISTANCE OF NO MORE THAN 230'-0". IF TOTAL BENDS ARE MORE THAN 180 DEREES, INCREASE CONDUIT SIZE ONE TRADE SIDE FOR EVERY ADDITIONAL 90 DEGREES. TYPICAL OF ALL LOCATIONS.
2. INSTALL EACH CABLE TYPE IN A SEPARATE CONDUIT.

bhd ARCHITECTS
www.bhdarchitects.com
Phone 801.571.0010
Fax 801.571.0303
Toll Free 888.571.0010
65 East Wadsworth Park Drive
Suite 205 Draper, Utah 84020

LICENSED PROFESSIONAL ENGINEER
No. 5148728
DAVID G. HINCKLEY
8-15-24
STATE OF UTAH

SPECTRUM ENGINEERS
324 S. State St., Suite 400
Salt Lake City, UT 84111
800-678-7077
801-328-5151
fax: 801-328-5155
www.spectrum-engineers.com

THE CHURCH OF JESUS CHRIST OF LATTER-DAY SAINTS

Springwater 9
Vineyard UT Springwater Stake
Approx. 542 South Geneva Road
Vineyard, Utah 84059

BHD #: 2346
County Parcel: 39:228:0001
Plan Series: G300-MH-11
Owner #: 502-2004
Date: 15 Aug 2024

Drawing Issue and Revision Schedule

#	Date	Description
1	15 Aug 2024	Bid Documents

MAIN FLOOR AV ROUGH-IN FLOOR PLAN

ET101

Autodesk Docs://240510 - Orem Vineyard Springwater Granger 300 Meetinghouse/240510-Tech Central.rvt
8/15/2024 7:42:49 AM

SHEET KEYNOTES

1. MOUNT DATA OUTLET FLUSH IN CEILING COORDINATE WITH DIVISION 27 1501 INSTALLER (TYPICAL).
2. MOUNT DATA OUTLET IN EQUIPMENT MEZZANINE ABOVE, NEXT TO MECHANICAL SYSTEM WEB INTERFACE. COORDINATE EXACT LOCATION WITH MECHANICAL INSTALLER.
3. ENSURE THE JUNCTION BOX FOR 'SV' IS NOT BEHIND DISPLAY BOARD.
4. MOUNT DATA OUTLET IN EQUIPMENT MEZZANINE ABOVE, NEXT TO LIGHTING CONTROLS. COORDINATE EXACT LOCATION WITH LIGHTING INSTALLER.
5. INSTALL ALS ANTENNA VERTICALLY IN ATTIC SPACE ABOVE CHAPEL.

GENERAL SHEET NOTES

1. MOUNT ALL LOUDSPEAKER BACKBOXES ON TILE BRIDGES IN SUSPENDED TILE CEILINGS. SECURE ALL BACKBOXES WITH SEISMIC RESTRAINT CABLE ACCORDING TO 5/ET601.

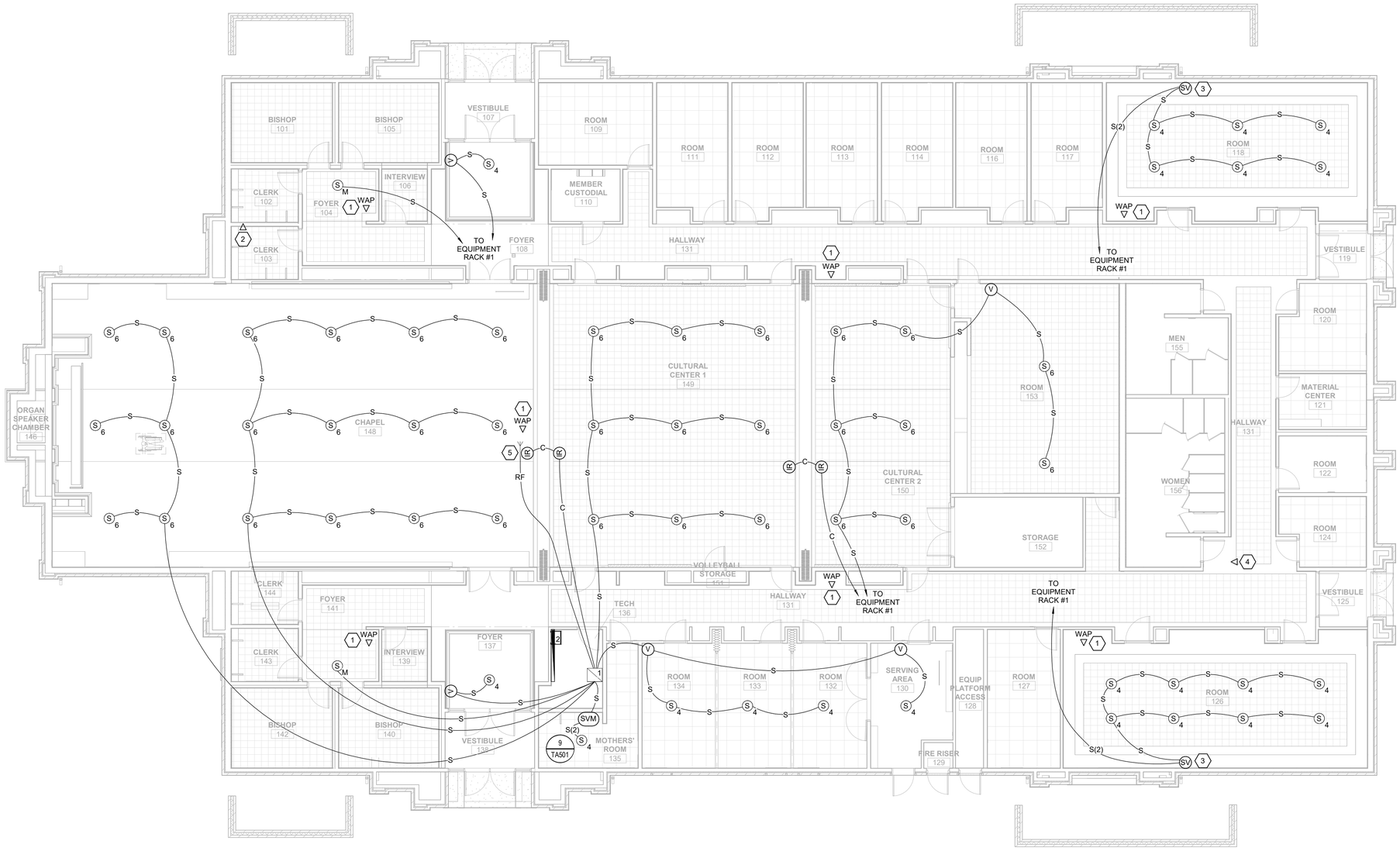

2 MAIN FLOOR AV ROUGH-IN CEILING PLAN
1/8" = 1'-0"

bhd ARCHITECTS
www.bhdarchitects.com
Phone 801.571.0010
Fax 801.571.0303
Toll Free 888.571.0010
65 East Wadsworth Park Drive
Suite 205 Draper, Utah 84020

LICENSED PROFESSIONAL ENGINEER
No. 5148728
DAVID G. HINCKLEY
8-15-24
STATE OF UTAH

SPECTRUM ENGINEERS
324 S. State St., Suite 400
Salt Lake City, UT 84111
800-678-7077
801-328-5151
fax: 801-328-5155
www.spectrum-engineers.com

THE CHURCH OF JESUS CHRIST OF LATTER-DAY SAINTS

Springwater 9
Vineyard UT Springwater Stake

Approx. 542 South Geneva Road
Vineyard, Utah 84059

Date: 15 Aug 2024
BHD #: 2346
County Parcel: 39:228:0001
Plan Series: G300-MH-11
Owner #: 502-2004

Drawing Issue and Revision Schedule

#	Date	Description
1	15 Aug 2024	Bid Documents

MAIN FLOOR AV ROUGH-IN CEILING PLAN

ET102

Autodesk Docs://240510 - Orem Vineyard Springwater Granger 300 Meetinghouse/240510-Tech Central.rvt
8/15/2024 7:42:53 AM

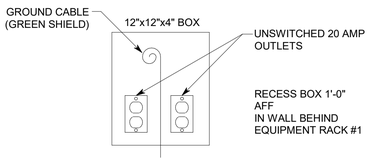

6 AV POWER JUNCTION BOX

NO SCALE

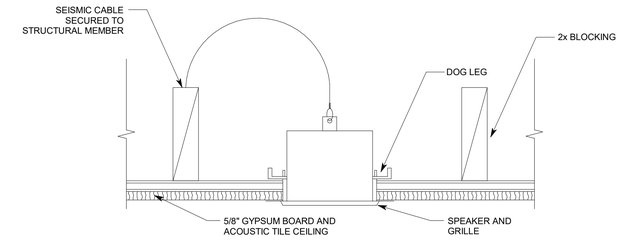

5 SPEAKER SEISMIC DETAIL

NO SCALE

4 CULTURAL CENTER CONTROLS JUNCTION BOX DETAIL

NO SCALE

CC CC2



3 TECH ROOM 136 DETAIL

NO SCALE

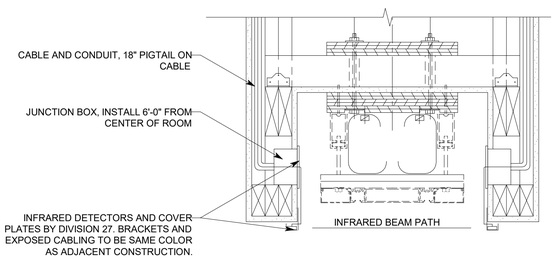

2 HEADER DETAIL (IN CULTURAL CENTER)

NO SCALE

IR

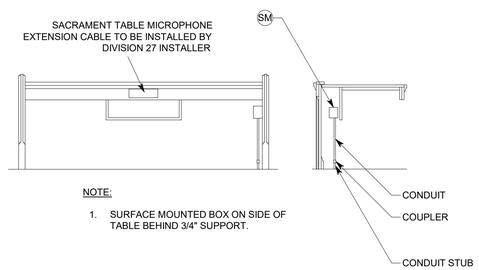

1 SACRAMENT TABLE MICROPHONE DETAIL

NO SCALE

SM

ELECTRICAL SYSTEM EQUIPMENT LIST

SYM	DESCRIPTION	QTY	NOTES
M	2-1/8" DEEP, SINGLE GANG BOX W/ 5/8" PLASTER RING MOUNTED AT ELECTRICAL OUTLET HEIGHT, OR AS NOTED	OFP	
V	3-1/4" DEEP, 4-11/16" SQUARE BOX W/ 5/8" DEEP, SINGLE GANG PLASTER RING MOUNTED AT ELECTRICAL SWITCH HEIGHT	OFP	
WAP	2-1/8" DEEP, SINGLE GANG BOX W/ 5/8" SINGLE GANG PLASTER RING, FLUSH MOUNTED IN CEILING	OFP	
2	2-1/8" DEEP, DOUBLE GANG BOX MOUNTED AT ELECTRICAL OUTLET HEIGHT W/ 5/8" SINGLE GANG PLASTER RING	OFP	
▼	2-1/8" DEEP, DOUBLE GANG BOX MOUNTED AT FIRE ALARM PANEL W/ 5/8" DEEP SINGLE GANG PLASTER RING, OR AS NOTED	OFP	COORDINATE EXACT LOCATION WITH FIRE ALARM INSTALLER
SVM	3-1/4" DEEP, 4-11/16" SQUARE BOX W/ 5/8" DEEP, DOUBLE GANG PLASTER RING MOUNTED AT ELECTRICAL SWITCH HEIGHT	OFP	SEE DETAIL 9/TA501
SV	3-1/4" DEEP, 4-11/16" SQUARE BOX W/ 5/8" DEEP, DOUBLE GANG PLASTER RING MOUNTED AT ELECTRICAL SWITCH HEIGHT	OFP	SEE DETAIL 8/TA501
CC	3-1/4" DEEP, 4-11/16" SQUARE BOX W/ 5/8" DEEP, DOUBLE GANG PLASTER RING MOUNTED AT 5'-0" ABOVE FINISHED FLOOR	OFP	SEE DETAIL 4/ET601 AND 5/ET602
SM	2-1/8" DEEP, SINGLE GANG BOX SURFACE MOUNTED	1	SEE DETAIL 1/ET601 COORDINATE WITH MILLWORK DETAILS ON ARCHITECTURAL SHEETS
CP	CONTROL PEDESTAL, STUB CONDUITS THROUGH FLOOR	1	COORDINATE WITH MILLWORK DETAILS ON ARCHITECTURAL SHEETS
CP1 CP2	2-1/8" DEEP, TRIPLE GANG BOX, MOUNTED ON PULPIT SIDE	OFP	SEE DETAIL 7/TA501 COORDINATE WITH MILLWORK DETAILS ON ARCHITECTURAL SHEETS
CP3 CP4	MIN 3" DEEP TRIPLE GANG STEEL BOX, W/ 3/4" DEEP MUD RING, MOUNTED AT ELECTRICAL OUTLET HEIGHT	OFP	SEE DETAILS 1/ET602, 2/ET602, 5/ET602 AND 4/TA501, 5/TA501, 6/TA501
CP6	3-1/4" DEEP, 4-11/16" SQUARE BOX W/ 5/8" DEEP, DOUBLE GANG PLASTER RING MOUNTED AT ELECTRICAL OUTLET HEIGHT	OFP	SEE DETAIL 10/TA501
MON	LARGE CAPACITY JUNCTION BOX, INCLUDING FLANGE KIT AND COVER, MOUNTED IN WALL AT +7'-0" AFF ABOVE FINISHED FLOOR	OFP	CHIEF PAC 525FCW, SEE DETAIL 3/ET602
1	AV EQUIPMENT CABINET W/ 12"x12"x4" METAL JUNCTION BOX RECESSED IN WALL	OFP	CABINET FURNISHED AND INSTALLED BY AV INSTALLER, SEE DETAILS 3/ET601, 6/ET601, 1/TA501
2	DATA EQUIPMENT RACK, SWING FRAME	OFP	FURNISHED AND INSTALLED BY DIVISION 27, SEE DETAILS 3/ET601, 4/ET602, AND 5/TT601
IR	2-1/8" DEEP, DOUBLE GANG BOX MOUNTED IN DOOR HEADER	OFP	SEE DETAIL 2/ET601
S4	SPEAKER MOUNTING RING	OFP	FURNISHED BY DIVISION 27, INSTALLED BY DIVISION 26, SEE DETAIL 5/ET601
SM	SPEAKER ENCLOSURE	OFP	FURNISHED BY DIVISION 27, INSTALLED BY DIVISION 26, SEE DETAIL 5/ET601
S6	SPEAKER MOUNTING RING	OFP	FURNISHED BY DIVISION 27, INSTALLED BY DIVISION 26, SEE DETAIL 5/ET601
	WALL FIELD, PRE-TREATED PAINTED 0.75" PLYWOOD	OFP	FURNISHED AND INSTALLED BY DIVISION 26. SEE DETAILS 3/ET601 AND 4/ET602

MANUFACTURER'S NAMES AND TELEPHONE NUMBERS ARE LISTED IN THE SPECIFICATIONS
A/R = AS REQUIRED, OFP = OBTAIN FROM PLANS

GENERAL PROJECT NOTES

1. NO CHANGES SHALL BE MADE WITHOUT THE PROJECT AV/STRUCTURED CABLING CONSULTANT'S WRITTEN CONSENT.
2. REFER TO DRAWINGS FOR EXACT NUMBER OF COMPONENTS USED IF NOT SPECIFIED IN EQUIPMENT LIST.
3. PROVIDE CONDUIT FOR ALL LOW VOLTAGE CABLES SHOWN ON ET SHEETS AS FOLLOWS:
   - 3.1. PROVIDE CONDUIT FOR H,C,D,U,A AND S CABLES FROM DEVICE TO MECHANICAL EQUIPMENT PLATFORM ABOVE TECHNOLOGY ROOM 136. CABLES MAY THEN RUN EXPOSED AND STUB DOWN TO LADDER RACK. PROTECT EXPOSED CABLING ACCORDING TO DIVISION 27. ALLOW NO OTHER CABLE TO ATTACH TO TECHNOLOGY CABLES.
   - 3.2. PROVIDE CONDUITS FOR ALL ROSTRUM DEVICES TO ORGAN CHAMBER AND UNDER SLAB CONDUIT FROM ORGAN CHAMBER TO EQUIPMENT RACKS.
   - 3.3. PROVIDE CONDUIT UNDER SLAB FOR ALL "M", "B", AND "L" CABLES FROM DEVICE TO TECHNOLOGY ROOM EQUIPMENT RACK.
   - 3.4. ALL CABLING IN WALLS SHALL BE IN CONDUIT.
   - 3.5. SIZE CONDUIT AS NOTED OR ACCORDING TO CODE WHICHEVER IS GREATER WITH 0.75" MINIMUM.
   - 3.6. INSTALL DIFFERENT CABLE TYPES IN SEPARATE CONDUITS UNLESS NOTED OTHERWISE. SEPARATE CABLE TYPES OUTSIDE OF CONDUIT BY 12" MINIMUM
   - 3.7. ALL CONDUITS WITH OR WITHOUT CABLES SHALL HAVE A PULL STRING.
   - 3.8. LABEL ALL CONDUITS WITH DESTINATION.
   - 3.9. DEBUR ALL CONDUIT STUBS AND FIT WITH PLASTIC BUSHING
   - 3.10. RACEWAY SHALL BE FURNISHED AND INSTALLED BY DIVISION 26. CABLING IS FURNISHED AND INSTALLED BY DIVISION 27. RACEWAY, CABLING, AND TERMINATIONS SHALL BE ACCORDING TO 27 1501.
4. DIVISION 26 INSTALLER IS TO PROVIDE ALL ROUGH-IN INDICATED FOR DIVISION 27 INSTALLER. ALL ROUGH-IN SHALL COMPLY WITH ANSI/TIA/EIA 569-B STANDARDS. THIS INCLUDES, BUT IS NOT LIMITED TO, THE LIMITATION OF (2) 90° BEND FOR CONDUIT. IT IS THE DIVISION 26 INSTALLERS RESPONSIBILITY TO ENSURE COMPLIANCE WITH STANDARD.
5. REFER TO A400 SERIES SHEETS FOR ADDITIONAL INFORMATION ON ROUGH-IN. SEE "A" SHEETS FOR MOUNTING DETAILS IN MILLWORK.
6. SPEAKER TRIM RINGS ARE FURNISHED BY DIVISION 27 AND INSTALLED BY DIVISION 26.
7. "ET" SHEETS SHOW WORK AND MATERIALS BY DIVISION 26 AND DIVISION 27. SEE SPECIFICATIONS AND DRAWING NOTES FOR RESPONSIBILITY FOR EACH ITEM.
8. PROVIDE GROUNDING AS SHOWN ON DRAWINGS AND IN COMPLIANCE WITH CODE AND ANSI/TIA/EIA 569-B.
9. DIVISION 26 SHALL FURNISH AND INSTALL SEISMIC RESTRAINT CABLE TO ALL SPEAKER BACK BOXES. DIVISION 27 SHALL ATTACH SEISMIC RESTRAINT CABLE TO SPEAKERS.

bhd ARCHITECTS
www.bhdarchitects.com
Phone 801.571.0010
Fax 801.571.0303
Toll Free 888.571.0010
65 East Wadsworth Park Drive
Suite 205 Draper, Utah 84020

LICENSED PROFESSIONAL ENGINEER
No. 5148728
DAVID G. HINCKLEY
8-15-24
STATE OF UTAH

SPECTRUM ENGINEERS
324 S. State St., Suite 400
Salt Lake City, UT 84111
800-678-7077
801-328-5151
fax: 801-328-5155
www.spectrum-engineers.com

THE CHURCH OF JESUS CHRIST OF LATTER-DAY SAINTS

Springwater 9
Vineyard UT Springwater Stake
Approx. 542 South Geneva Road
Vineyard, Utah 84059

Owner #: 502-2004
Plan Series: G300-MH-11
County Parcel: 39-228-0001
BHD #: 2346
Date: 15 Aug 2024

Drawing Issue and Revision Schedule

#	Date	Description
1	15 Aug 2024	Bid Documents

AV ROUGH-IN SCHEDULES, NOTES, DETAILS, AND DIAGRAM

ET601

Autodesk Docs://240510 - Orem Vineyard Springwater Granger 300 Meetinghouse/240510-Tech Central.rvt
8/15/2024 7:42:53 AM

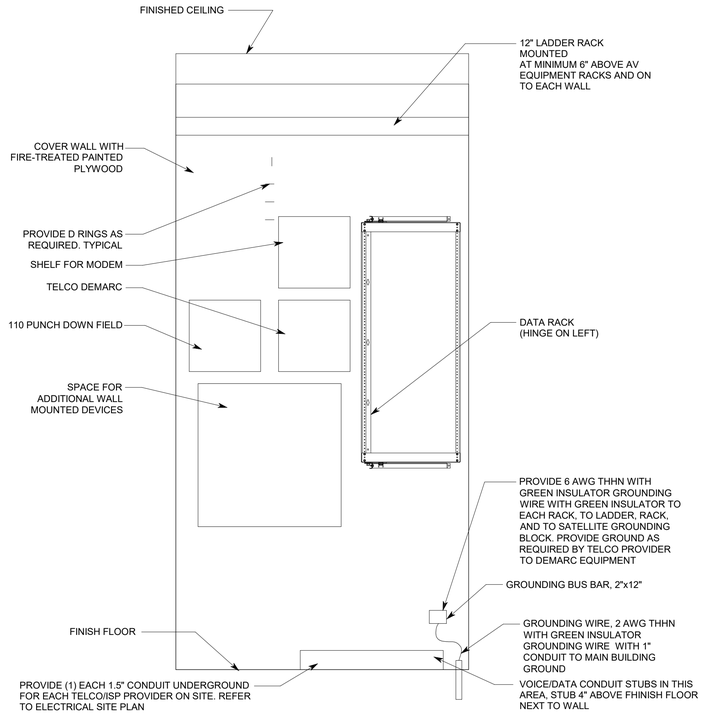

4 TECH 136 WALL ELEVATION
NO SCALE

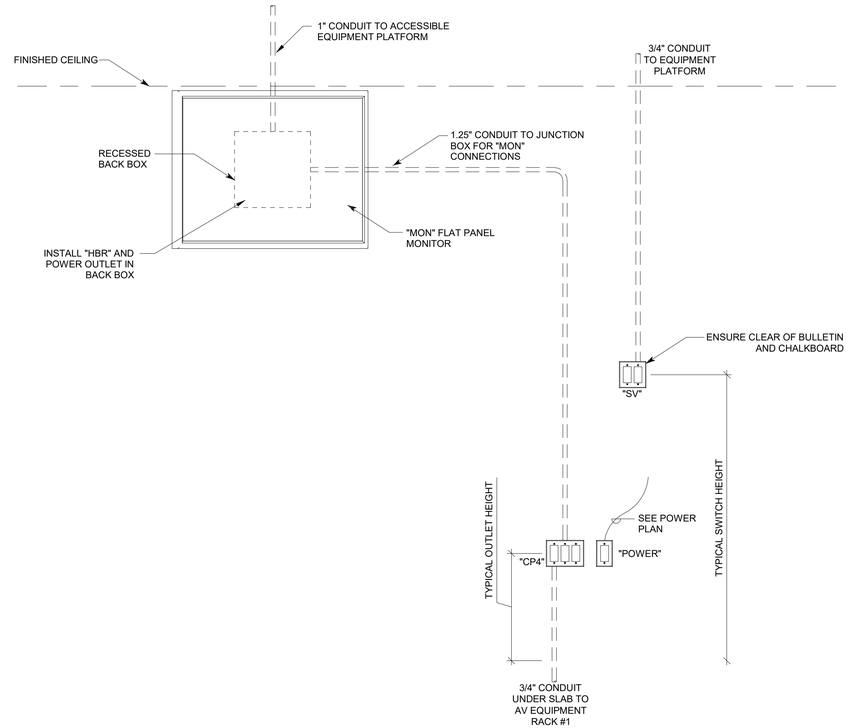

2 RELIEF SOCIETY & CHILDREN'S MEETING ROOM WALL ELEVATION DETAIL
NO SCALE

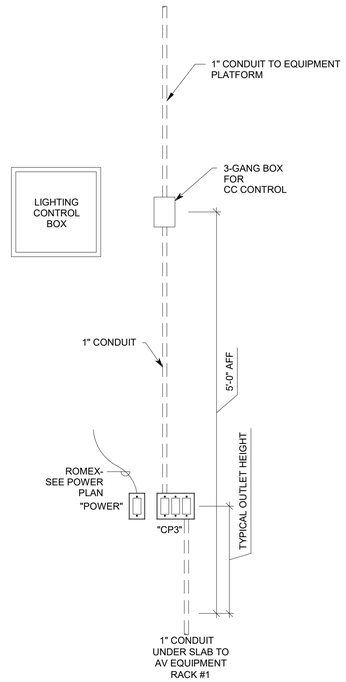

5 CULTURAL CENTER CC AND CP3 MOUNTING DETAIL
NO SCALE

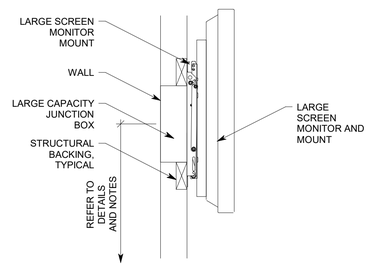

3 WALL MOUNTED FLAT PANEL DETAIL
NO SCALE

MON

1 NOT USED
NO SCALE

bhd ARCHITECTS
www.bhdarchitects.com
Phone 801.571.0010
Fax 801.571.0303
Toll Free 888.571.0010
65 East Wadsworth Park Drive
Suite 205 Draper, Utah 84020

LICENSED PROFESSIONAL ENGINEER
No. 5148728
DAVID G. HINCKLEY
8-15-24
STATE OF UTAH

SPECTRUM ENGINEERS
324 S. State St., Suite 400
Salt Lake City, UT 84111
800-678-7077
801-328-5151
fax: 801-328-5155
www.spectrum-engineers.com

THE CHURCH OF JESUS CHRIST OF LATTER-DAY SAINTS

Springwater 9
Vineyard UT Springwater Stake
Approx. 542 South Geneva Road
Vineyard, Utah 84059

Date: 15 Aug 2024
BHD #: 2346
County Parcel: 39-228-0001
Plan Series: G300-MH-11
Owner #: 502-2004

Drawing Issue and Revision Schedule

#	Date	Description
1	15 Aug 2024	Bid Documents

AV ROUGH-IN DETAILS

ET602

Autodesk Docs://240510 - Orem Vineyard Springwater Granger 300 Meetinghouse/240510-Tech Central.rvt
8/15/2024 7:42:54 AM

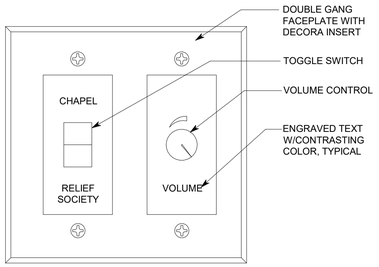

10 MOTHERS ROOM CONTROLLER

NO SCALE

SVM

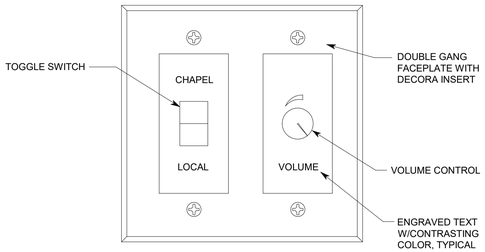

9 SOURCE/VOLUME CONTROL

NO SCALE

SV

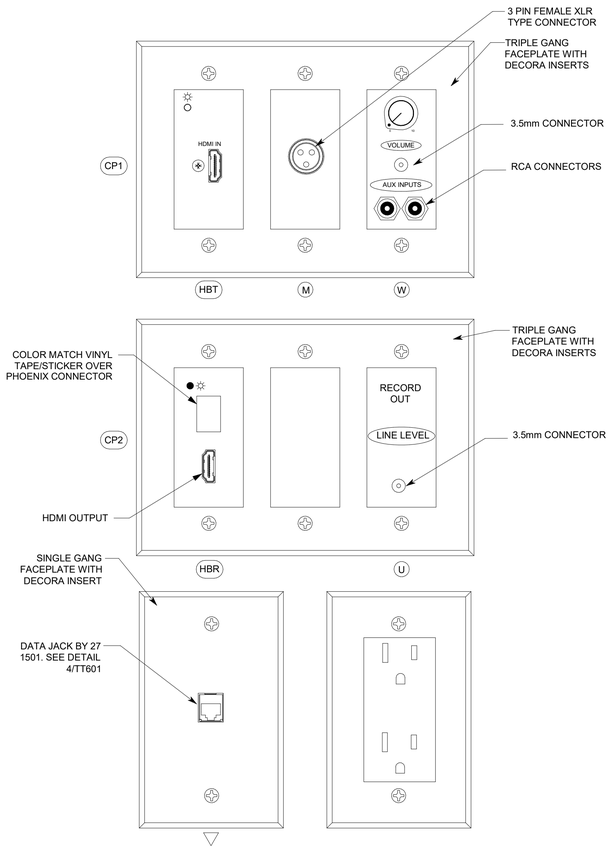

8 PULPIT CONNECTION DETAILS

NO SCALE

CP1 CP2

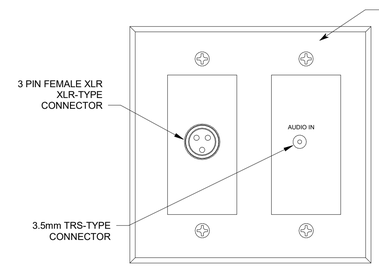

7 CULTURAL CENTER AUDIO PLATE CONNECTION PANEL #6

NO SCALE

CP6

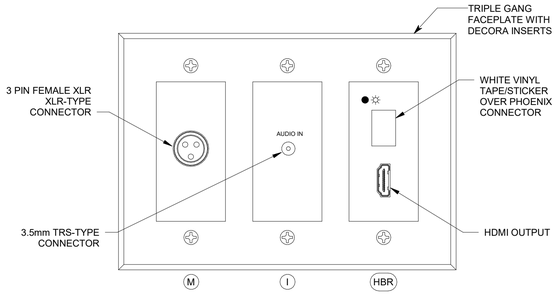

6 OVERFLOW AUDIO-VIDEO PLATE CONNECTION PANEL #3

NO SCALE

CP3

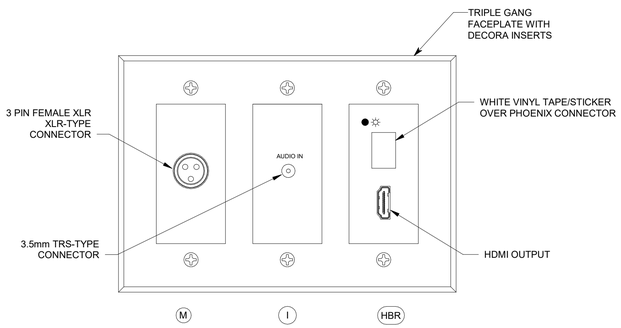

5 CONNECTION PANEL #5

NO SCALE

CP5

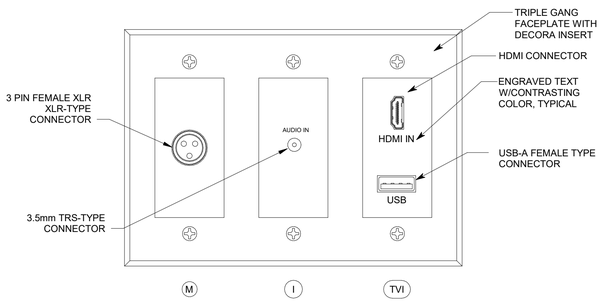

4 CONNECTION PANEL #4

NO SCALE

CP4



3 HELP DESK PANEL

NO SCALE

HDP

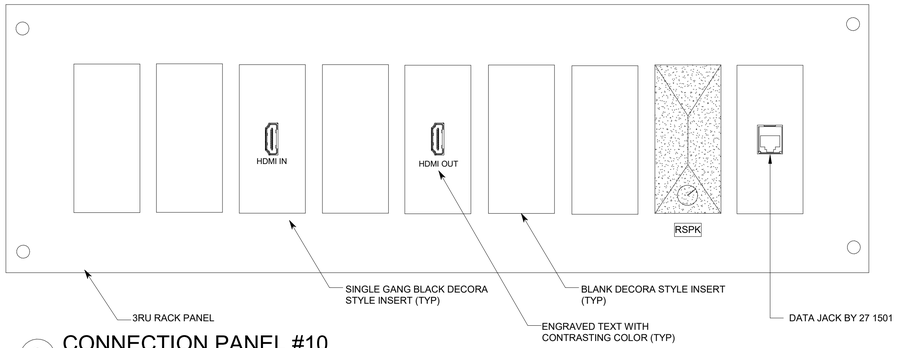

2 CONNECTION PANEL #10

NO SCALE

CP10

1 EQUIPMENT RACK ELEVATION AND DETAILS

NO SCALE

1

bhd ARCHITECTS
www.bhdarchitects.com
Phone 801.571.0010
Fax 801.571.0303
Toll Free 888.571.0010
65 East Wadsworth Park Drive
Suite 205 Draper, Utah 84020

LICENSED PROFESSIONAL ENGINEER
No. 5148728
DAVID G. HINCKLEY
8-15-24
STATE OF UTAH

SPECTRUM ENGINEERS
324 S. State St., Suite 400
Salt Lake City, UT 84111
800-678-7077
801-328-5151
fax: 801-328-5155
www.spectrum-engineers.com

THE CHURCH OF JESUS CHRIST OF LATTER-DAY SAINTS

Springwater 9
Vineyard UT Springwater Stake

Approx. 542 South Geneva Road
Vineyard, Utah 84059

Owner #: 502-2004
Plan Series: G300-MH-11
County Parcel: 39:228:0001
BHD #: 2346
Date: 15 Aug 2024

Drawing Issue and Revision Schedule

#	Date	Description
1	15 Aug 2024	Bid Documents

AV SYSTEMS DETAILS

TA501

Autodesk Docs://240510 - Orem Vineyard Springwater Granger 300 Meetinghouse/240510-Tech Central.rvt
8/15/2024 7:42:55 AM

AUDIO-VIDEO SYSTEM EQUIPMENT LIST

SYM	DESCRIPTION	QTY	ACCEPTABLE TYPES
	12" LADDER RACK W/ WALL AND RACK ATTACHMENTS	A/R	CHATSWORTH 10250-712 MIDDLE ATLANTIC CLB-6
HBDA	HDBASET DISTRIBUTION AMPLIFIER, 4 PORT	OFP	EXTRON DTP HD DA4 4K 330
VS	HDMI SWITCHER, 2x1, AUTO	OFP	EXTRON SW2 HD 4K PLUS
	RACK SHELF	OFP	EXTRON RSU 126
HBR2	HD BASE T RACK RECEIVER	OFP	EXTRON DTP2 R 211
	RACK SHELF	1	EXTRON RSU 126
CP	CHAPEL CONTROL PEDESTAL PLATE	OFP	QSC TSC-50-GW3 W/ 3-GANG 1/16" METAL BLACK ANODIZED MOUNTING PLATE
CC	CULTURAL CENTER REMOTE CONTROL	OFP	QSC TSC-50-GW3
NS	OWNER STANDARD NETWORK SWITCH	OFCI	OWNER FURNISHED-INSTALLED BY DIV 271501, SEE DETAIL TT601
FW	OWNER STANDARD FIREWALL	OFCI	OWNER FURNISHED-INSTALLED BY DIV 271501, SEE DETAIL TT601
▽2 ▽ WAP	DATA OUTLET- FURNISHED AND INSTALLED BY STRUCTURED CABLING CONTRACTOR	OFP	SEE DETAIL TT602
▼	VOICE OUTLET- FURNISHED AND INSTALLED BY STRUCTURED CABLING CONTRACTOR	OFP	SEE DETAIL TT602
DPP	DATA PATCH PANEL - FURNISHED AND INSTALLED BY STRUCTURED CABLING CONTRACTOR	OFP	SEE DETAIL TT602
MON	FLAT SCREEN TV, 19", FRONT PANEL CONTROLS ACCESSIBLE FROM FRONT	OFP	TOTEVISION LED 1562 HDR OR APPROVED EQUIVALENT
HDA	HDMI DISTRIBUTION AMPLIFIER, 1x2	OFP	EXTRON DA2 HD 4K
HAE	HDMI AUDIO EXTRACTOR	OFP	EXTRON HAE 100 4K
SV	SOURCE AND VOLUME CONTROL	OFP	EMTECH MSC-S W/ EMTECH MSC-V50 RCI EQUIVALENT
IR	INFRARED DETECTORS COVER CABLE W/ LIGHT COLORED TUBING	OFP	EMTECH BLU-IR
S 4	4" LOUDSPEAKER LOUDSPEAKER GRILLE LOUDSPEAKER ENCLOSURE	OFP	COMMUNITY D4 W/D4NCB JBL CONTROL 14C/T W/ MTC-24NC LOWELL ES-42T W/ ES-4-RIB
S M	4" LOUDSPEAKER	OFP	ATLAS SOUND FC104T72 LOWELL JR410-T470 ELECTRO-VOICE 205-4T
	LOUDSPEAKER GRILLE	OFP	ATLAS SOUND T720-4BT LOWELL CN-4M
	LOUDSPEAKER ENCLOSURE	OFP	ATLAS SOUND E410-11
S 6	6" LOUDSPEAKER LOUDSPEAKER GRILLE LOUDSPEAKER ENCLOSURE	OFP	COMMUNITY D6 W/D6NCB JBL CONTROL 16C/T W/ MTC-26NC LOWELL ES-62T W/ ES-6-RIB
MON	FLAT SCREEN TV, 65"	OFCI	OWNER FURNISHED, CONTRACTOR INSTALLED
	FLAT PANEL WALL MOUNT	OFCI	PEERLESS AV HPF650, OWNER FURNISHED, CONTRACTOR INSTALLED
	HD BASE T RECEIVER, FURNITURE MOUNT	OFP	EXTRON DTP HDMI 4K 330 RX
CP1	HDMI HD BASE T WALL TRANSMITTER	OFP	EXTRON DTP2 T 201D
	MICROPHONE INPUT MODULE	OFP	EMTECH MSC-M RCI LDS002-MF-X (X=COLOR)
	SOUND SYSTEM LINE LEVEL INPUT	OFP	EMTECH MSC-W3 RU RCI LDS002-RCI-M-B
CP2	HDMI HD BASE T WALL RECEIVER	OFP	EXTRON DTP R HWP 4K 331 D
	SOUND SYSTEM OUT	OFP	EMTECH MSC-U3 RU
CP3	CONNECTION PANEL #3	OFP	EMTECH MSC-M OR RCI LDS002-MF-X (X=COLOR) EMTECH MSC-I OR RCI MI9105 EXTRON DTP R HWP 4K 331 D TRIPLE GANG DECORA SURROUND SEE DETAIL 6/TA501
CP4	CONNECTION PANEL #4	OFP	EMTECH MSC-M OR RCI LDS002-MF-X (X=COLOR) EMTECH MSC-I OR RCI LDS002-W-X (X=COLOR) EMTECH MSV-TVI OR RCI MI 9511 TRIPLE GANG DECORA SURROUND HDMI HIGHSPEED CABLE USB 3.0 CABLE SEE DETAIL 4/TA501
CP5	CONNECTION PANEL #5	OFP	EMTECH MSC-M OR RCI LDS002-MF-X (X=COLOR) EMTECH MSC-I OR RCI LDS002-W-X (X=COLOR) EXTRON DTP R HWP 4K 331 D TRIPLE GANG DECORA SURROUND SEE DETAIL 5/TA501
CP6	CONNECTION PANEL #6	OFP	EMTECH MSC-M OR RCI LDS002-MF-X (X=COLOR) EMTECH MSC-I OR RCI LDS002-W-X (X=COLOR) DOUBLE GANG DECORA SURROUND SEE DETAIL 10/TA501

SYM	DESCRIPTION	QTY	ACCEPTABLE TYPES
	HIGH IMPACT NYLON COVER PLATES FOR ALL DECORA STYLE AV MODULES, NUMBER OF GANGS AS REQUIRED. COLORS TO MATCH NEARBY ELECTRICAL DEVICES	OFP	HUBBELL OR LEVITON
M SM	MICROPHONE INPUT MODULE	OFP	EMTECH MSC-M RCI LDS002-MF-X (X=COLOR) FOR 'SM', SEE DETAILS 1/ET601 AND E,F/A411
	50'-0" MICROPHONE EXTENSION CABLES W/ BLACK CONNECTORS	1	CONQUEST B84-50 WHIRLWIND MK450
	25'-0" MICROPHONE EXTENSION CABLES W/ BLACK CONNECTORS	2	CONQUEST B84-25 WHIRLWIND MK425
	MICROPHONE, GENERAL USE	2	AUDIO-TECHNICA ATM610AS AKG D5-S
	MICROPHONE, CHAPEL PULPIT	1	AUDIO-TECHNICA ES905CLA
	MICROPHONE, SACRAMENT TABLE	1	IVIE IM-10 EMTECH BLU-SM
	MICROPHONE,GOOSENECK. INSTALL ON PRIMARY ROOM PULPIT WITH METAL PLATE-MOUNTED FEMALE XLR WIRED TO MALE XLR INSIDE PULPIT IN WIREMOLD BOX	1	AUDIO TECHNICA U855QL W/ CABLE, JUNCTION BOX, AND RCI LDS0002-RCI-PMJ
	10'-0" MICROPHONE EXTENSION CABLE W/ BLACK CONNECTORS	1	CONQUEST B84-10 WHIRLWIND MK410
	15'-0" MICROPHONE EXTENSION CABLE W/ BLACK RIGHT ANGLE MALE CONNECTOR FOR PRIMARY ROOM MICROPHONE	1	CONQUEST B84-15 WHIRLWIND MK415
	8'-0" PEDESTRIAN STRIP	1	TECHFLEX DRN 3.00BK
	MICROPHONE STAND, FLOOR TYPE	1	ATLAS SOUND MS-20E W/PB21 XEB KONIG AND MEYER 210/9
ALS	ASSISTED LISTENING SYSTEM	1	LISTEN MH-01-01
		A/R	RG-58 50Ω COAX CABLE
V	VOLUME CONTROL MODULE	OFP	EMTECH MSC-V10 OR V35 AS APPROPRIATE FOR SPEAKER LOAD RCI LDS002-MSCV-35
SVM	SOURCE AND VOLUME CONTROL	OFP	EMTECH MSC-S WITH EMTECH MSC-V10 WITH SPECIAL LABELING ACCORDING TO DETAIL 9/TA501
	INSTALLED HDMI INTERCONNECT CABLE, 3'	A/R	HDMI HIGH SPEED
	INSTALLED HDMI INTERCONNECT CABLE, 6'	A/R	
	HDMI CABLE, 15 FEET, FOR OWNER	2	
	HDMI CABLE, 50 FEET, FOR OWNER	1	
1	AV EQUIPMENT CABINET, FLOOR/ WALL MOUNT W/ FRONT DOOR	OFP	MIDDLE ATLANTIC SR-40-28 W/ VFD-40
	DRAWER	1	MIDDLE ATLANTIC UD3 ATLAS SOUND SD3-14
	SHELF	1	MIDDLE ATLANTIC SS LOWELL RSD-116
2	DATA RACK, SWING FRAME	OFP	SEE VOICE-DATA EQUIPMENT LIST, SHEET TT601
ADSP	AUDIO MIXER, DIGITAL SIGNAL PROCESSOR W/ POWER SUPPLY, I/O MODULES, RELAYS, AND ACCESSORIES AS REQUIRED.	OFP	QSC CORE 110F V2 W/ UCI & SCRIPTING LICENSES
		A/R	QSC QIO-ML2X2
QIF	QSC PERIPHERAL INTERFACE	OFP	EMTECH QIF
IOE	GPIO EXPANSION	1	QSC Q70-GP8X8
	RACK SHELF	A/R	EXTRON RSU 126
	SECURITY COVER	A/R	MIDDLE ATLANTIC SECS-1 W/ HTX SCREWS, OR EQUIVALENT
AE	AUDIO EXPANSION	1	QSC QIO-ML2X2
PA	POWER AMPLIFIERS PA1-PA4 (4 x 200 WATT)	OFP	QSC CX204V CROWN 135MA W/ RACK MOUNT KIT
	PA5-PA7 (35WATT)	OFP	JBL CSA 140Z W/ RACK MOUNT KIT TOA BA-235 W/ MB-25B-BK-OR MB-25B-J
HDP	HELP DESK PANEL, 1 RU	1	CUSTOM LABELING, SEE DETAIL 3/TA501
STS	STANDARD TERMINAL STRIP	OFP	
IT	ISOLATION TRANSFORMER	A/R	RDL TX-1A PRO CO LOT-1
TVSSE	SURGE SUPPRESSOR AND SWITCHER IP ENABLED W/ UL LISTED PLUG STRIP PROVIDE FOR EQUIPMENT RACK #1 AND #2	OFP	SURGEX SX-AX20E MIDDLE ATLANTIC RLNK P920R-SP W/ RLNK-CONT, RLNK-TEMP
	POWER STRIP, UL LISTED	A/R	6 OUTLET POWER STRIP OR EQUAL
	TVSS/ADSP RELAY INTERFACE	A/R	24 VDC RELAY, POWER SUPPLY AND BASE
TVSS	NON SEQUENCING SURGE SUPPRESSOR	OFP	MIDDLE ATLANTIC PD 915R-SP
CP10	CONNECTION PANEL #10	OFP	LOWELL D9P-ID-3 OR AS APPROVED CUSTOM HDMI INPUT CUSTOM HDMI OUTPUT *CUSTOM DEVICES MUST BE FABRICATED ON METAL DECORA INSERTS AS SHOWN ON 2/TA501
RSPK	RACK MONITOR SPEAKER, DECORA	OFP	RDL D-PSP1/PS-24AS

MANUFACTURER'S NAMES AND TELEPHONE NUMBERS ARE LISTED IN THE SPECIFICATIONS
A/R = AS REQUIRED, OFP = OBTAIN FROM PLANS OFCI = OWNER FURNISHED AND CONTRACTOR INSTALLED

GENERAL PROJECT NOTES

1. NO CHANGES SHALL BE MADE WITHOUT THE PROJECT ACOUSTICAL AND TECHNOLOGY CONSULTANT'S WRITTEN CONSENT.
2. REFER TO DRAWINGS FOR EXACT NUMBER OF COMPONENTS USED IF NOT SPECIFIED IN EQUIPMENT LIST.
3. SEE 'ET' SHEETS FOR DEVICE LOCATIONS AND COORDINATION.
4. SEE SHEET TT601 FOR ADDITIONAL COORDINATION.
5. SECURE ALL LOUDSPEAKER ASSEMBLIES WITH SEISMIC RESTRAINTS. MOUNT ALL LOUDSPEAKER ASSEMBLIES IN SUSPENDED TILE CEILINGS ON TILE BRIDGES EVEN IF NOT SHOWN IN EQUIPMENT LIST.
6. MOUNT ALS ANTENNA VERTICALLY IN ATTIC IN LOCATION CHOSEN TO PROVIDE MAXIMUM COVERAGE OF CHAPEL AND CULTURAL CENTER.

GENERAL SHEET NOTES

1. CONNECT CHAPEL AND ROSTRUM SPEAKERS TOGETHER AT TERMINAL STRIP IN RACK. DISCONNECT CHAPEL SPEAKERS FOR FOLDING PARTITION TESTING.
2. UNLESS OTHERWISE NOTED, MODULES SHALL BE PURCHASED FROM MANUFACTURER LISTED, NOT CUSTOM MADE. COLOR OF INSERTS AND COVER PLATES TO MATCH ELECTRICAL DEVICES.
3. 'TVSSE' DEVICES CAN PROVIDE EMAIL NOTIFICATION WHEN POWER AND TEMPERATURE THRESHOLDS ARE EXCEEDED. SET EMAIL NOTIFICATIONS TO BE SENT TO FM PROVIDED EMAILS ADDRESS WHEN MANUFACTURE RECOMMENDED POWER AND TEMPERATURE LIMITS ARE EXCEEDED.
4. FURNISH SPEAKER ENCLOSURES AND TRIM RINGS TO DIVISION 26 INSTALLER FOR INSTALLATION.
5. REFER TO A SHEETS FOR COORDINATION OF ITEMS MOUNTED IN WOOD MILLWORK.

bhd ARCHITECTS
www.bhdarchitects.com
Phone 801.571.0010
Fax 801.571.0303
Toll Free 888.571.0010
65 East Wadsworth Park Drive
Suite 205 Draper, Utah 84020

LICENSED PROFESSIONAL ENGINEER
No. 5148728
DAVID G. HINCKLEY
8-15-24
STATE OF UTAH

SPECTRUM ENGINEERS
324 S. State St., Suite 400
Salt Lake City, UT 84111
800-678-7077
801-328-5151
fax: 801-328-5155
www.spectrum-engineers.com

THE CHURCH OF JESUS CHRIST OF LATTER-DAY SAINTS

Springwater 9
Vineyard UT Springwater Stake

Approx. 542 South Geneva Road
Vineyard, Utah 84059

Owner #: 502-2004
Plan Series: G300-MH-11
County Parcel: 39-228:0001
BHD #: 2346
Date: 15 Aug 2024

Drawing Issue and Revision Schedule

#	Date	Description
1	15 Aug 2024	Bid Documents

AV SYSTEMS SCHEDULES AND NOTES

TA601

Autodesk Docs://240510 - Orem Vineyard Springwater Granger 300 Meetinghouse/240510-Tech Central.rvt
8/15/2024 7:42:56 AM

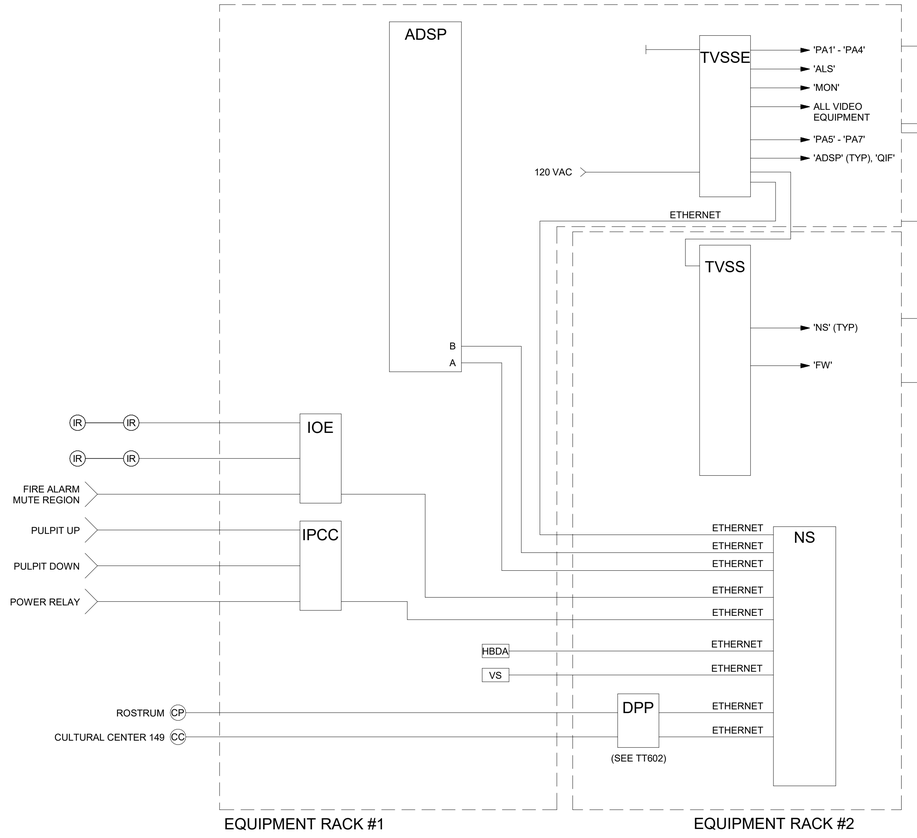

2 CONTROL/LOGIC RISER DIAGRAM

NO SCALE

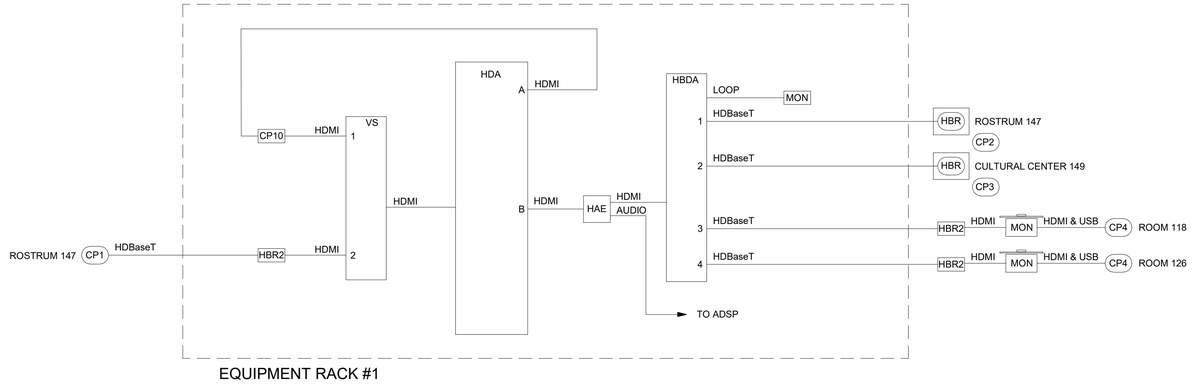

1 VIDEO SYSTEM RISER DIAGRAM

NO SCALE

GENERAL SHEET NOTES

1. WHERE MULTIPLE DEVICES ARE SHOWN ON A SINGLE 'TVSSE' OUTLET, PROVIDE PLUG STRIPS AS REQUIRED.
2. QSC CONTROLLER MUST BE CONNECTED TO POE PORT.
3. HDBASE T AND QSC DEVICES ARE IP COMMUNICATIONS PROTOCOL DEVICES. TWISTED PAIR CABLES MUST MEET STANDARDS DEFINED IN THE HORIZONTAL COMMUNICATIONS SPECIFICATIONS.
4. N/C INDICATES NO CONNECTION.
5. ADSP AND CONTROL/LOGIC WIRING IS GENERIC. SEE MANUFACTURER'S INSTRUCTION SHEET FOR WIRING DETAILS.
6. USE DHCP FOR IP ADDRESS ASSIGNMENT.
7. CONFIGURE NETWORK SWITCH FOR PROPER NETWORK ZONES. NETWORK PORTS CONNECTED TO CONVENIENCE OUTLETS AND QSC DEVICE B PORTS SHALL BE CONFIGURED FOR PUBLIC ACCESS. ALL OTHER AV AND FACILITIES DEVICES SHALL BE CONNECTED TO PORTS CONFIGURED FOR FACILITIES ZONE ACCESS.
8. CONFIGURE RLNK TO PROVIDE 2 LEVELS OF POWER RESET. LEVEL 1 SHALL TURN OFF ALL "SWITCHED DEVICES". LEVEL 2 SHALL BE TRIGGERED AT 3AM, AND INCLUDE AMPLIFIER. IN ADDITION TO LEVEL 1 DEVICES USE IP TRIGGERS.

bhd ARCHITECTS
www.bhdarchitects.com
Phone 801.571.0010
Fax 801.571.0303
Toll Free 888.571.0010
65 East Wadsworth Park Drive
Suite 205 Draper, Utah 84020

LICENSED PROFESSIONAL ENGINEER
No. 5148728
DAVID G. HINCKLEY
8-15-24
STATE OF UTAH

SPECTRUM ENGINEERS
324 S. State St., Suite 400
Salt Lake City, UT 84111
800-678-7077
801-328-5151
fax: 801-328-5155
www.spectrum-engineers.com

THE CHURCH OF JESUS CHRIST OF LATTER-DAY SAINTS

Springwater 9
Vineyard UT Springwater Stake

Approx. 542 South Geneva Road
Vineyard, Utah 84059

BHD #: 2346
County Parcel: 39-228:0001
Plan Series: C300-MH-11
Owner #: 502-2004
Date: 15 Aug 2024

Drawing Issue and Revision Schedule

#	Date	Description
1	15 Aug 2024	Bid Documents

AV SYSTEMS DIAGRAMS

TA602

Autodesk Docs://240510 - Orem Vineyard Springwater Granger 300 Meetinghouse/240510-Tech Central.rvt
8/15/2024 7:42:56 AM

GENERAL SHEET NOTES

1. WHERE MULTIPLE DEVICES ARE SHOWN ON A SINGLE 'TVSS' OUTLET, PROVIDE PLUG STRIPS AS REQUIRED.
2. QSC CONTROLLER MUST BE CONNECTED TO POE PORTS.
3. HDBASE T AND QSC DEVICES ARE IP COMMUNICATIONS PROTOCOL DEVICES. TWISTED PAIR CABLES MUST MEET STANDARDS DEFINED IN THE HORIZONTAL COMMUNICATIONS SPECIFICATIONS.
4. N/C INDICATES NO CONNECTION.
5. ADSP AND CONTROL/LOGIC WIRING IS GENERIC. SEE MANUFACTURER'S INSTRUCTION SHEET FOR WIRING DETAILS.
6. USE DHCP FOR IP ADDRESS ASSIGNMENTS. ASSIGNMENTS.

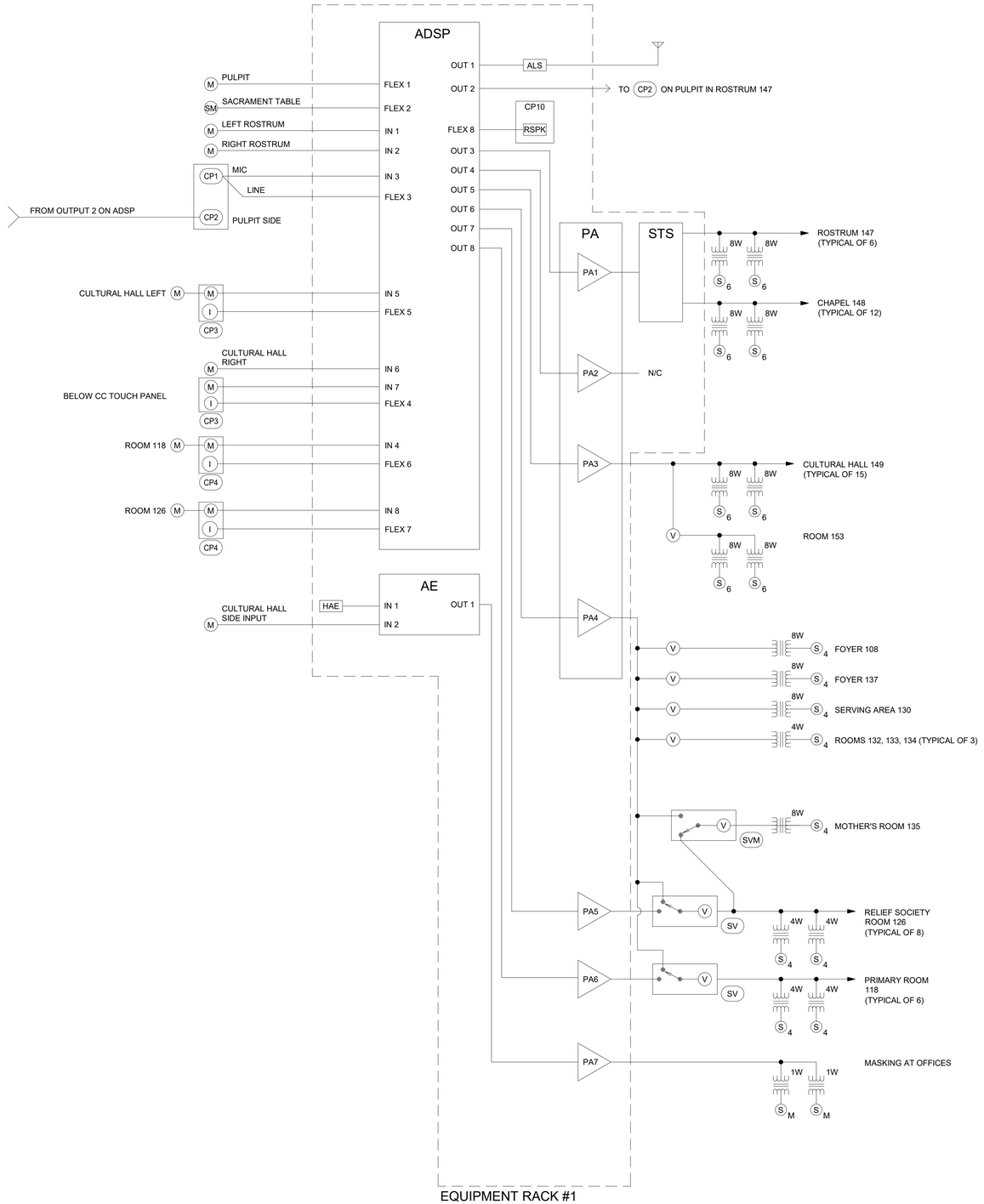

1 AUDIO SYSTEM RISER DIAGRAM
NO SCALE

bhd ARCHITECTS
www.bhdarchitects.com
Phone 801.571.0010
Fax 801.571.0303
Toll Free 888.571.0010
65 East Wadsworth Park Drive
Suite 205 Draper, Utah 84020

LICENSED PROFESSIONAL ENGINEER
No. 5148728
DAVID G. HINCKLEY
8-15-24
STATE OF UTAH

SPECTRUM ENGINEERS
324 S. State St., Suite 400
Salt Lake City, UT 84111
800-678-7077
801-328-5151
fax: 801-328-5155
www.spectrum-engineers.com

THE CHURCH OF JESUS CHRIST OF LATTER-DAY SAINTS

Springwater 9
Vineyard UT Springwater Stake

Approx. 542 South Geneva Road
Vineyard, Utah 84059

BHD #: 2346
County Parcel: 39:228:0001
Plan Series: G300-MH-11
Owner #: 502-2004
Date: 15 Aug 2024

Drawing Issue and Revision Schedule

#	Date	Description
1	15 Aug 2024	Bid Documents

AV SYSTEMS DIAGRAMS

TA603

Autodesk Docs://240510 - Orem Vineyard Springwater Granger 300 Meetinghouse/240510-Tech Central.rvt
8/15/2024 7:42:57 AM

VOICE-DATA SYSTEM EQUIPMENT/CABLE LIST

THE FOLLOWING IS A PARTIAL LIST OF MATERIALS FOR THE DATA/PHONE SYSTEM. REFER TO SPECIFICATION 27 1501 FOR FULL REQUIREMENTS. VERIFY ALL PART NUMBERS WITH MANUFACTURER'S CATALOG NUMBERS AND NOTIFY CONSULTANT OF DISCREPANCIES PRIOR TO BIDDING. FURNISH MISCELLANEOUS HARDWARE NOT LISTED TO PROVIDE A COMPLETE SYSTEM.

SYM	DESCRIPTION	ACCEPTABLE TYPES
TELCO DEMARC	TELECOMMUNICATIONS PROVIDER DEMARCATION POINT	FURNISHED AND INSTALLED BY PROVIDER
ISP DEMARC	INTERNET SERVICE PROVIDER DEMARCATION POINT	FURNISHED AND INSTALLED BY PROVIDER
DPP	PATCH PANEL, DATA, 48-PORT W/ CAT 6 INSERT, BLUE (QUANTITIES OF PORTS AS REQUIRED +25%)	SEE SPECIFICATION 271501
TVSS	SURGE SUPPRESSOR AND SWITCHER W/ UL LISTED PLUG STRIP	FURNISHED AND INSTALLED BY AV INSTALLER
	UL LISTED POWER STRIP	6 OUTLET POWER STRIP OR EQUAL
D(#)	STATION CABLE, DATA-CAT 6, DATA, BLUE JACKET (#) INDICATES NUMBER OF CABLES IF MORE THAN ONE	SEE SPECIFICATION 271501
WAP ▽	DATA OUTLET, WIRELESS ACCESS POINT SINGLE GANG BEZEL	SEE SPECIFICATION 271501 SEE DETAIL 8/ET601
	BEZEL INSERTS	SEE SPECIFICATION 271501
	CAT 6 JACK-DATA (1)	SEE SPECIFICATION 271501
▼	VOICE OUTLET SINGLE GANG BEZEL	SEE SPECIFICATION 271501
	BEZEL INSERTS	SEE SPECIFICATION 271501
	CAT 6 JACK-DATA (1)	SEE SPECIFICATION 271501
▽ ▽2	DATA OUTLET SINGLE GANG BEZEL	SEE SPECIFICATION 271501
	BEZEL INSERTS	SEE SPECIFICATION 271501
	CAT 6 JACK-DATA (1 OR 2)	SEE SPECIFICATION 271501
	COPPER CAT 6 PATCH CABLES (INCLUDE CABLES LONG ENOUGH TO CONNECT TO EQUIPMENT IN EQUIPMENT CABINET RACK #1 AS NEEDED)	SEE SPECIFICATION 271501
	CAT 6 J-HOOKS	CADDY CAT32Z34
HWM	HORIZONTAL WIRE MANAGER HORIZONTAL WIRE MANAGER SHALL NOT HAVE A DEPTH OF MORE THAN 3"	SEE SPECIFICATION 271501
NS	NETWORK SWITCH, OWNER STANDARD	OWNER FURNISHED-CONTRACTOR INSTALLED
	RACK MOUNT SHELF	MIDDLE ATLANTIC U2
IRC	IRRIGATION REMOTE CONNECTION	FURNISHED AND INSTALLED BY IRRIGATION CONTRACTOR
BMG	BUILDING MANAGEMENT GATEWAY	FURNISHED AND INSTALLED BY MECHANICAL CONTROLS CONTRACTOR
FW	INTERNET FIREWALL, OWNER STANDARD,	OWNER FURNISHED-CONTRACTOR INSTALLED
	RACK MOUNT SHELF	MIDDLE ATLANTIC U2
ISP MODEM	INTERNET SERVICE MODEM	OWNER FURNISHED-CONTRACTOR INSTALLED
	WALL MOUNT SHELF	MIDDLE ATLANTIC WMS-20
110 BLOCK	110 PUNCH DOWN BLOCK, CAT6	SEE SPECIFICATIONS 27 1501
WAP	WIRELESS ACCESS POINT. OWNER STANDARD	OWNER FURNISHED-CONTRACTOR INSTALLED, INSTALL AT EACH 'WAP' LOCATION SHOWN ON ET102. PROVIDE WALL BRACKET AS SHOWN ON DETAIL 8/ET601
/2	DATA RACK, SWING FRAME	MIDDLE ATLANTIC SFR-20-18 LOWELL SR-12-18, SEE DETAILS 4/ET602 AND 5/TT601
CC CP	AUDIO VIDEO USER INTERFACE	INTERFACE BY AV INSTALLER; DATA CONNECTION BY 27 1501 SEE TA601, TA602
	CAT6 DATA JACK	SEE SPECIFICATION 27 1501
NHP	NETWORK HELP DESK PANEL	1RU RACK PANEL WITH CUSTOM LABELING SEE DETAIL 7/TT602

NOTE: ALL PATCH PANELS AND ACCESSORIES SHALL BE BLACK IN COLOR

AUDIO-VIDEO CABLE EQUIPMENT LIST

SYM	DESCRIPTION	QTY	ACCEPTABLE TYPES
A(X)	HDMI CABLE (X) INDICATES NUMBER OF CABLES, IF MORE THAN ONE	A/R	BELDEN HD 800-XX LIBERTY HD 1000-XX OR AS APPROVED BY CONSULTANT ('XX' LENGTH REQUIRED)
C(X)	CONTROL CABLE, WHITE JACKET (X) INDICATES NUMBER OF CABLES, IF MORE THAN ONE	A/R	BELDEN 1872A WEST PENN 4246 LIBERTY 24-4P-L6-EN OR AS APPROVED BY CONSULTANT
H(X)	HDBASE T CABLE, BLACK JACKET, (X) INDICATES NUMBER OF CABLES, IF MORE THAN ONE	A/R	WEST PENN 4246AF COMMSCOPE 1291B F/UTP BELDEN 10GX62F OR AS APPROVED BY CONSULTANT
L(X)	LINE LEVEL CABLE, (X) INDICATES NUMBER OF CABLES, IF MORE THAN ONE	A/R	BELDEN 9451 WEST PENN 454 LIBERTY 22-1P-EZ OR AS APPROVED BY CONSULTANT
LC	CONTROL CABLE FOR PULPIT LIFT MOTOR 3 CONDUCTOR, 20 AWG	A/R	BELDEN 8772 WEST PENN 232 OR AS APPROVED BY CONSULTANT
M(X)	MICROPHONE CABLE, (X) INDICATES NUMBER OF CABLES, IF MORE THAN ONE	A/R	LIBERTY 22-1P-EZ BELDEN 9451 WEST PENN 454 OR AS APPROVED BY CONSULTANT
RF	RF CABLE, 50 OHM, COAXIAL , RG-59 FOR ALS	A/R	WEST PENN 25812 BELDEN 89907
S(X)	SPEAKER CABLE, (X) INDICATES NUMBER OF CABLES, IF MORE THAN ONE	A/R	BELDEN 8471 WEST PENN 225 LIBERTY 16-2C-GRY OR AS APPROVED BY CONSULTANT
U(X)	USB CABLE, (X) INDICATES NUMBER OF CABLES, IF MORE THAN ONE	A/R	USB 2.0 OR GREATER, PRE-MADE LIBERTY U026-20M OR AS APPROVED BY CONSULTANT

MANUFACTURER'S NAMES AND TELEPHONE NUMBERS ARE LISTED IN THE SPECIFICATIONS
A/R = AS REQUIRED

GENERAL PROJECT NOTES

1. LABEL ALL CABLE REGARDLESS OF LENGTH.
2. THE EQUIPMENT LABELING IDENTIFIED ON DETAILS IN THESE DRAWINGS ARE EXAMPLES ONLY. PRIOR TO FABRICATION, SUBMIT THE NOMENCLATURE FOR ALL CABLING AND EQUIPMENT TO THE CONSULTANT APPROVAL.
3. COIL 5' OF EXTRA CABLE AT THE TECHNOLOGY ROOM AND 18"' AT THE OUTLET FOR EACH CABLE RUN.
4. USE CADDY CLIPS OR BRIDLE RINGS FOR ALL CABLE OUTSIDE OF CONDUIT. GENERAL PROJECT NOTES ET601.
5. ALL CABLE AND UTP TO TERMINATE ON BOTH ENDS.
6. ALL VOICE-DATA OUTLETS ON WALLS SHALL BE MOUNTED WITHIN 6" OF A POWER OUTLET. IF CONTRADICTIONS ARISE ON PLANS, NOTIFY ENGINEER.
7. REFER TO SHEET ET101 AND ET102 FOR VOICE-DATA JACK LOCATIONS AND ROUTING OF AV CABLE.
8. EQUIPMENT RACK TO BE INSTALLED BY AV INSTALLER.
9. ALL VOICE-DATA CABLING AND EQUIPMENT SHALL BE INSTALLED ACCORDING TO DIVISION 27 1501.
10. INSTALL OWNER FURNISHED NETWORK EQUIPMENT SHOWN. AS PART OF INSTALLATION SET UP AND CONFIGURE DEVICES IN ACCORDANCE WITH OWNER REQUIREMENTS. COORDINATE WITH LOCAL FACILITIES MANAGER.
11. COORDINATE WITH FACILITIES MANAGER AND PROJECT MANAGER WELL IN ADVANCE OF PROJECT COMPLETION TO ENSURE INSTALLATION OF ALL OWNER FURNISHED EQUIPMENT IS INSTALLED AND SET UP PROPERLY. IN ADDITION, ENSURE OWNER PROVIDES INTERNET SERVICE TO BUILDING PRIOR TO FINAL INSTALLATION OF AV AND VOICE DATA EQUIPMENT.
12. INSTALL A DATA PATCH CABLE TO NS FOR ALL DATA LOCATIONS SHOWN ON PLANS.
13. FURNISH AND INSTALL ALL AUDIO-VIDEO CABLE SHOWN. PROVIDE 3' EXTRA CABLE AT OUTLET END AND 15' EXTRA CABLE AT EQUIPMENT RACK. COIL AND LABEL.
14. INSTALL PATCH IN AND SET-UP OWNER FURNISHED WIRELESS ACCESS POINTS.
15. SEE "TA" AND "ET" SHEETS FOR DEVICE LOCATIONS AND ADDITIONAL COORDINATION.
16. ALL HORIZONTAL CABLING AND TERMINATIONS SHALL BE FROM SINGLE MANUFACTURER, AS NECESSARY SUCH THAT INSTALLER MAY PROVIDE EXTENDED SYSTEM WARRANTY OF 25 YEARS OR MORE.
17. CABLE RUNS ORIGINATING FROM OUTSIDE THE RACK SHALL BE TERMINATED TO DPP, WITH PATCH CABLE TO NETWORK SWITCH. DEVICES IN THE SAME RACK AS THE NETWORK SWITCH MAY BE CONNECTED DIRECTLY TO THE SWITCH.

bhd ARCHITECTS
www.bhdarchitects.com
Phone 801.571.0010
Fax 801.571.0303
Toll Free 888.571.0010
65 East Wadsworth Park Drive
Suite 205 Draper, Utah 84020

LICENSED PROFESSIONAL ENGINEER
No. 5148728
DAVID G. HINCKLEY
8-15-24
STATE OF UTAH

SPECTRUM ENGINEERS
324 S. State St., Suite 400
Salt Lake City, UT 84111
800-678-7077
801-328-5151
fax: 801-328-5155
www.spectrum-engineers.com

THE CHURCH OF JESUS CHRIST OF LATTER-DAY SAINTS

Springwater 9
Vineyard UT Springwater Stake

Approx. 542 South Geneva Road
Vineyard, Utah 84059

BHD #: 2346
County Parcel: 39:228:0001
Plan Series: G300-MH-11
Owner #: 502-2004
Date: 15 Aug 2024

Drawing Issue and Revision Schedule

#	Date	Description
1	15 Aug 2024	Bid Documents

TELECOM SCHEDULES AND NOTES

TT601

Autodesk Docs://240510 - Orem Vineyard Springwater Granger 300 Meetinghouse/240510-Tech Central.rvt
8/15/2024 7:42:57 AM

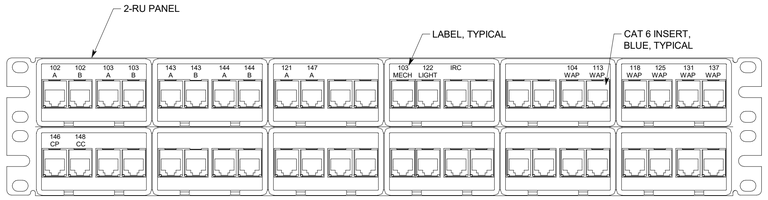

1 PATCH PANEL DETAIL, 48-PORT, TYPICAL

NO SCALE



7 HELP DESK PANEL

NO SCALE

NHP

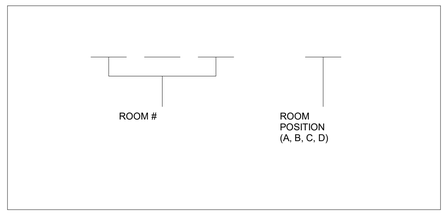

2 CABLE LABEL DETAIL

NO SCALE

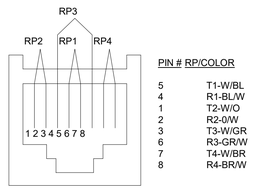

3 OUTLET PINNING DETAIL

NO SCALE

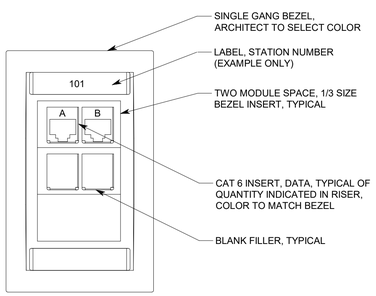

4 TYP DATA OUTLET

NO SCALE

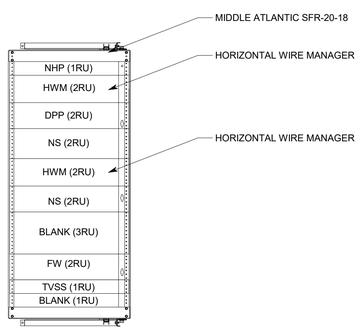

5 DATA RACK ELEVATION

NO SCALE

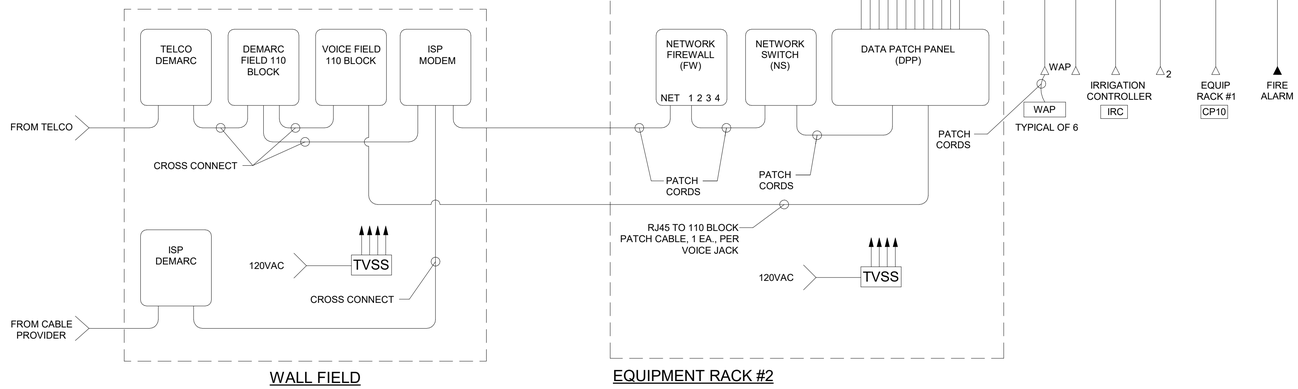

6 STRUCTURED CABLING RISER DIAGRAM

bhd ARCHITECTS
www.bhdarchitects.com
Phone 801.571.0010
Fax 801.571.0303
Toll Free 888.571.0010
65 East Wadsworth Park Drive
Suite 205 Draper, Utah 84020

LICENSED PROFESSIONAL ENGINEER
No. 5148728
DAVID G. HINCKLEY
8-15-24
STATE OF UTAH

SPECTRUM ENGINEERS
324 S. State St., Suite 400
Salt Lake City, UT 84111
800-678-7077
801-328-5151
fax: 801-328-5155
www.spectrum-engineers.com

THE CHURCH OF JESUS CHRIST OF LATTER-DAY SAINTS

Springwater 9
Vineyard UT Springwater Stake

Approx. 542 South Geneva Road
Vineyard, Utah 84059

BHD #: 2346
County Parcel: 39-228-0001
Plan Series: G300-MH-11
Owner #: 502-2004
Date: 15 Aug 2024

Drawing Issue and Revision Schedule

#	Date	Description
1	15 Aug 2024	Bid Documents

TELECOM DETAILS AND DIAGRAMS

TT602

Autodesk Docs://240510 - Orem Vineyard Springwater Granger 300 Meetinghouse/240510-Tech Central.rvt
8/15/2024 7:42:58 AM

FIRE DETECTION SYMBOLS

FACP	FIRE ALARM CONTROL PANEL
F	MANUAL STATION
H	HEAT DETECTOR
S	SMOKE DETECTOR
S D	DUCT SMOKE DETECTOR (BY DIV 23). (COORDINATE CONNECTIONS WITH THE MECHANICAL CONTRACTOR)
F	SPEAKER/STROBE WITH 15cd STROBE (HIGHER OUTPUT STROBES AS NOTED ON DRAWINGS)
	AUDIBLE VOICE ALARM ANNUNCIATION: ALARM SIGNAL SHALL BE ANNUNCIATED BY AUDIBLE VOICE EVACUATION MESSAGE. MESSAGE SHALL BE DIGITALLY RECORDED WITH MESSAGE CONTENT MEETING REQUIREMENTS OF THE NFPA AND LOCAL AUTHORITY. MESSAGE SHALL BE FIELD PROGRAMMABLE AND RETAINED IN MEMORY IF POWER IS INTERRUPTED.
	SPEAKER ONLY
EOL	END OF LINE WIRING DEVICE
FS	WATER FLOW SWITCH
TS	VALVE TAMPER SWITCH
LT	LOW TEMPERATURE SENSOR
WP	DEVICE DESIGNED FOR OUTDOOR USE
PIV	POST INDICATOR VALVE (COORDINATE LOCATION WITH FIRE SPRINKLER CONTRACTOR)
P, CO	ADDRESSABLE COMBINATION PHOTOELECTRIC/ CARBON MONOXIDE DETECTOR

FIRE ALARM RISER NOTES

1. WIRING FROM DIFFERENT ANNUNCIATION AND INITIATING DEVICES LOOPS MAY BE COMBINED IN A COMMON CONDUIT. FOLLOW NEC REQUIREMENTS FOR FILL.
2. COORDINATE FIRE ALARM DEVICES WITH LIGHTING FIXTURES, SPEAKERS, GRILLS, ETC.
3. DO NOT INSTALL SMOKE DETECTORS WITHIN 3' OF ANY MECHANICAL GRILL.
4. NON-POWER LIMITED AND POWER LIMITED WIRING SHALL BE SEPARATED IN FACP.
5. PERMANENTLY IDENTIFY LOCATION OF CIRCUIT BREAKER FEEDING FACP AND PROVIDE RED MARKING ON CIRCUIT BREAKER.
6. PROVIDE PROTECTIVE WIRE GUARD ON DEVICES NOTED.
7. SEE L/FS501 FOR LOCATIONS OF DEVICES.
8. PROVIDE CONNECTION FOR FIRE SPRINKLER SYSTEM EXTERNAL BELL/HORN STROBE. SEE L/FS501.
9. PROVIDE FLUSH MOUNT STI LEXAN COVER.
10. ALL STROBES SHALL BE SYNCHRONIZED PER ALL ADA REQUIREMENTS.
11. FURNACES AS SHOWN ON DRAWINGS SHALL SHUTDOWN UPON GENERAL ALARM. PROVIDE ALL REQUIRED CONNECTIONS NECESSARY FOR SHUTDOWN. COORDINATE ALL WORK AND CONTROL CONNECTIONS WITH THE MECHANICAL CONTRACTOR.
12. INTELLIGIBLY CALCULATIONS FOR THIS PLAN ARE BASED ON SYSTEM SENSOR #SPV SPEAKERS. SUCCESSFUL FIRE ALARM SYSTEM SUPPLIER SHALL SHOW ON INSTALLATION DRAWING COMPLIANCE CALCULATIONS PER ALL NFPA REQUIREMENTS.
13. TO A/V SYSTEM. A/V SYSTEM SHALL MUTE UPON ALARM. COORDINATE ALL WORK AND REQUIREMENTS WITH THE A/V SYSTEM INSTALLER.
14. ALL FIRE ALARM CABLE THAT IS SUBJECT TO DAMAGE SHALL BE INSTALLED IN CONDUIT (ATTIC, EQUIPMENT PLATFORM, ABOVE SUSPENDED CEILINGS, ETC).
15. WHERE FIRE ALARM IS NOT RUN IN CONDUIT (SEE NOTE #14), CABLING SHALL BE RUN PERPENDICULAR AND PARALLEL TO SURFACES OF STRUCTURAL MEMBERS, AND FOLLOW SURFACE CONTOURS WHERE POSSIBLE.
16. DO NOT CONNECT, MOUNT OR SUPPORT ANY FIRE ALARM CABLING FROM DATA/COMM MOUNTING OR WIRE MANAGEMENT.
17. CARBON MONOXIDE ALARM SHALL NOTIFY THE OCCUPANTS TO EVACUATE THE BUILDING WITH A DISTINCT MESSAGE FROM THE GENERAL FIRE ALARM.

KEYED NOTES

1. SEE L/FS501 FOR LOCATIONS OF DEVICES.
2. PERMANENTLY IDENTIFY LOCATION OF CIRCUIT BREAKER FEEDING FACP AND PROVIDE RED MARKING ON CIRCUIT BREAKER.
3. NON-POWER LIMITED AND POWER LIMITED WIRING SHALL BE SEPARATED IN FACP.
4. PROVIDE PROTECTIVE WIRE GUARD ON DEVICES NOTED.
5. PROVIDE CONNECTION FOR FIRE SPRINKLER SYSTEM EXTERNAL BELL/HORN STROBE. SEE H/FS501.
6. PROVIDE OUTPUT FROM FIRE ALARM PANEL TO CONTROL SHUNT TRIP BREAKER SERVING RANGE(S). IF SMOKE DETECTOR IN BREAK ROOM GOES INTO ALARM, THE CIRCUIT BREAKER(S) SERVING THE RANGE(S) SHALL SHUNT TRIP.
7. WHERE DUCT SMOKE DETECTORS ARE SHOWN IN MEZZANINE PROVIDE FAN SHUTDOWN FROM FIRE PANEL TO FURNACES.

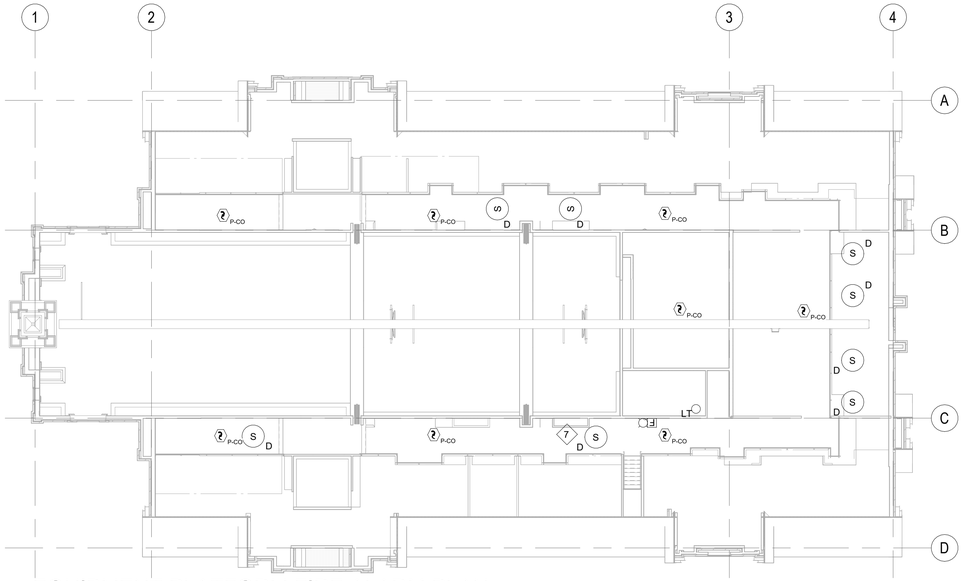

2 EQUIPMENT PLATFORM FIRE ALARM PLAN
1/16" = 1'-0"

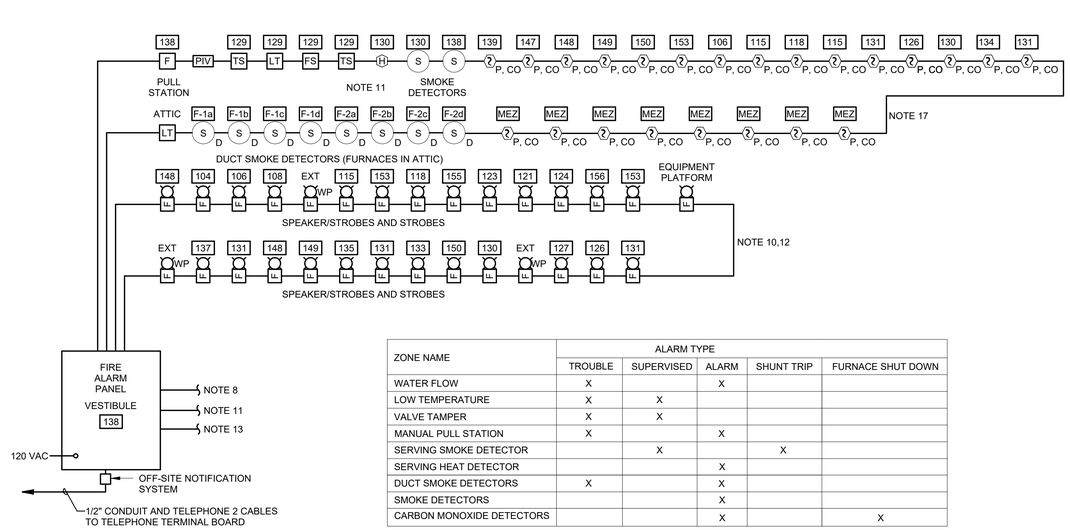

ZONE NAME	ALARM TYPE				
	TROUBLE	SUPERVISED	ALARM	SHUNT TRIP	FURNACE SHUT DOWN
WATER FLOW	X		X		
LOW TEMPERATURE	X	X			
VALVE TAMPER	X	X			
MANUAL PULL STATION	X		X		
SERVING SMOKE DETECTOR		X		X	
SERVING HEAT DETECTOR			X		
DUCT SMOKE DETECTORS	X		X		
SMOKE DETECTORS			X		
CARBON MONOXIDE DETECTORS			X		X

NOTES TO ELECTRICAL ENGINEER (ERASE BEFORE BIDDING)

1. THIS DESIGN DOES NOT MEET THE REQUIREMENTS OF ANY SPECIFIC MUNICIPALITY. VERIFY REQUIREMENTS OF AUTHORITY HAVING JURISTICTION (AHJ). DO NOT ALTER THIS DESIGN IF IT IS SATISFACTORY TO THE AHJ.
2. SEE SPECIFICATIONS FOR MORE INFORMATION ON OFF-SITE MONITORING REQUIREMENTS.

3 FA RISER DIAGRAM
NOT TO SCALE

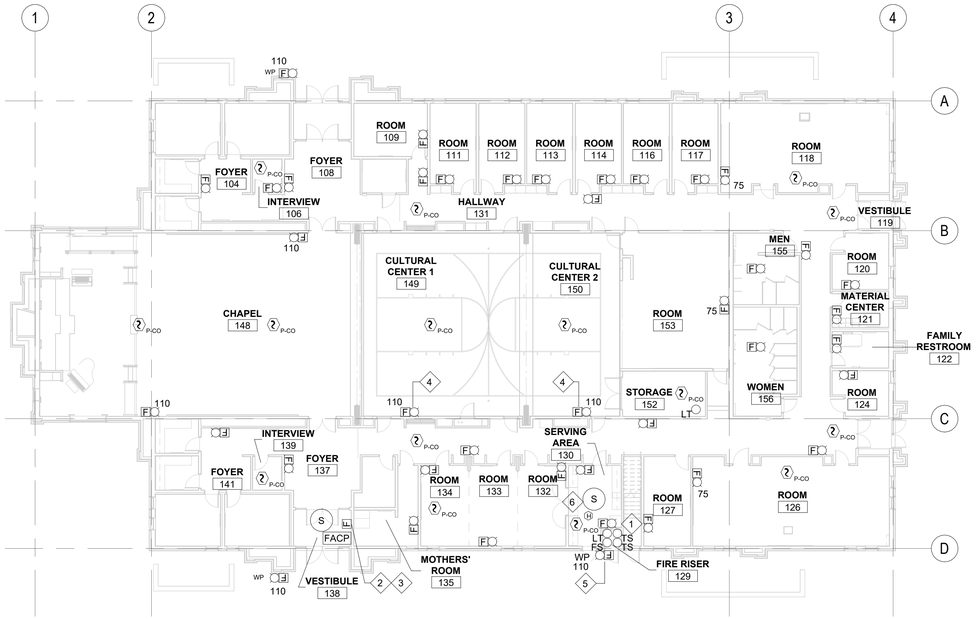

1 MAIN FLOOR FIRE ALARM PLAN
1/16" = 1'-0"

bhd ARCHITECTS
www.bhdarchitects.com
Phone 801.571.0010
Fax 801.571.0303
Toll Free 888.571.0010
65 East Wadsworth Park Drive
Suite 205 Draper, Utah 84020

LICENSED PROFESSIONAL ENGINEER
No. 5148728
DAVID G. HINCKLEY
8-15-24
STATE OF UTAH

SPECTRUM ENGINEERS
324 S. State St., Suite 400
Salt Lake City, UT 84111
800-678-7077
801-328-5151
fax: 801-328-5155
www.spectrum-engineers.com

THE CHURCH OF JESUS CHRIST OF LATTER-DAY SAINTS

Springwater 9
Vineyard UT Springwater Stake
Approx. 342 South Geneva Road
Vineyard, Utah 84059

Owner #: 502-2004
Plan Series: G300-MH-1.1
County Parcel: 39:228:0001
BHD #: 2346
Date: 15 Aug 2024

Drawing Issue and Revision Schedule

#	Date	Description
1	15 Aug 2024	Bid Documents

FIRE ALARM PLANS

FA101

Autodesk Docs://240510 - Orem Vineyard Springwater Granger 300 Meetinghouse/240510-Elec Central.rvt
8/15/2024 11:48:35 AM

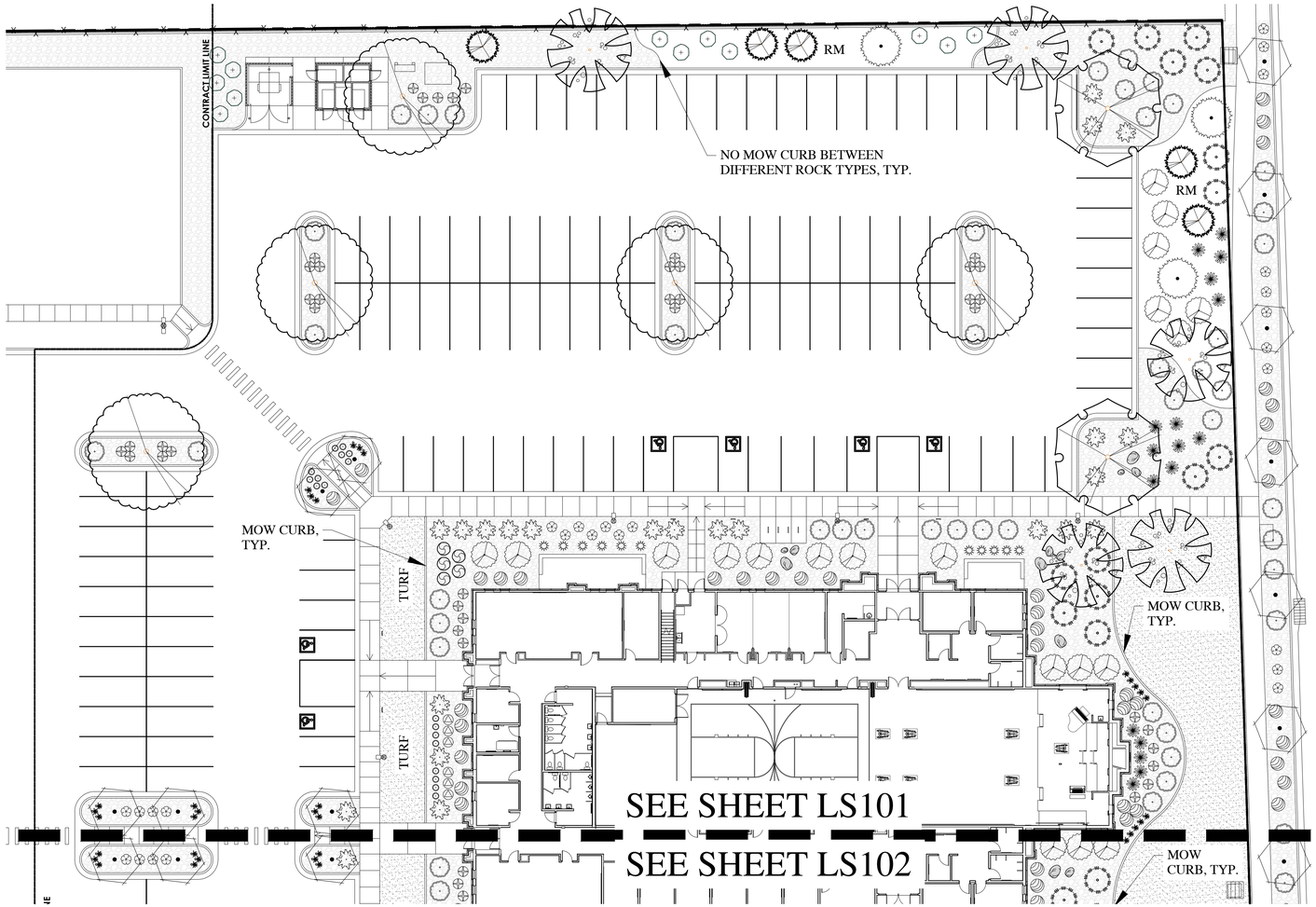

DESIGN CRITERIA

ECO-REGION	10.1 NORTHERN COLD DESERT
CLIMATE	U.S. HARDINESS ZONE 5
ZONING ORDINANCE	VINEYARD CITY
WATER AVAILABILITY	NA
SOIL TYPE	NA
SLOPES	SEE GRADING PLAN
WIND	SOUTH PREVAILING
SETBACKS/EASEMENTS	NA
MICROCLIMATES	NA
SOIL PH	NA
LAWN AREA	28% OF TOTAL LANDSCAPE (27,139 SQ. FT.)
UNDEVELOPED	NA
PROPERTY IRRIGATION SYSTEM	AUTOMATED SYSTEM WITH SMART CONTROLLER

LANDSCAPE DATA

TOTAL SITE AREA	415,178 SQ.FT.*		9.5 ACRES
TOTAL LANDSCAPE AREA	96,139 SQ.FT.*		23%
PLANTER AREA	69,000 SQ.FT.		72%
LAWN AREA	27,139 SQ.FT.		28%
TREES ON SITE	175**		
		TOTAL REQ'D = NA	PROVIDED = 175
		DECIDUOUS REQ'D = NA	PROVIDED = 127
		EVERGREEN REQ'D = NA	PROVIDED = 48
		SHRUBS REQ'D = NA	PROVIDED = 1,404
		DROUGHT TOLERANT REQ'D = NA	
ADDITIONAL INFO	NA	DROUGHT TOLERANT PROVIDED = 1,297 (92%)	

* PARK STRIP LANDSCAPE OF 5,826 SQ.FT. NOT INCLUDED IN THIS TOTAL
** TREE/PLANTING COUNT INCLUDES OREM 3RD BUILDING SECTION OF SITE

LANDSCAPE NOTES

1. STOCKPILED, SCREENED TOPSOIL TO BE IMPLEMENTED IN ALL PLANTING AREAS AT THE FOLLOWING DEPTHS: 12" IN ALL SHRUB BEDS, 5" IN ALL LAWN AREAS.
2. LAWN TO BE A DESERT SAGE BLUEGRASS BLEND (FROM CHANSHARE SOD) AND BE IMPLEMENTED AS SOD. REFER TO SOD LAYING NOTES FOR MORE INFORMATION.
3. 6" CONCRETE MOWCURB TO BE IMPLEMENTED BETWEEN ALL SHRUB BED AND LAWN AREAS AS SHOWN ON PLAN.
4. ROCK MULCH TO BE IMPLEMENTED IN ALL PLANTER BEDS AT DEPTHS NOTED IN LEGEND. ROCK MULCH TO BE CLEAN AND FREE OF DIRT AND DEBRIS, PLACED AT A UNIFORM DEPTH AND RAKED SMOOTH. INSTALL WEED BARRIER FABRIC UNDER ALL ROCK MULCH.
5. ALL TREES TO BE STAKED AT TIME OF PLANTING. SEE DETAILS FOR SPECIFICS. REMOVE STAKING WITHIN FIRST YEAR OR WHEN TREE IS ESTABLISHED.
6. NO LANDSCAPING OR OTHER OBSTRUCTION IN EXCESS OF 3' ABOVE FINISHED GRADE SHALL BE IMPLEMENTED IN CLEAR VIEW TRIANGLES.
7. MATERIAL QUANTITIES AND COUNTS ON LEGENDS AND NOTES ARE FOR CONVENIENCE ONLY. LANDSCAPE CONTRACTOR RESPONSIBLE TO VERIFY ALL COUNTS AND QUANTITIES ON PLANS.

SOD LAYING NOTES

1. LAY SOD WITHIN 24 HOURS OF BEING LIFTED.
2. LAY SOD IN ROWS WITH JOINTS STAGGERED. BUTT SECTIONS CLOSELY WITHOUT OVERLAPPING OR LEAVING GAPS BETWEEN SECTIONS. CUT OUT IRREGULAR OR THIN SECTIONS WITH A SHARP KNIFE.
3. LAY SOD FLUSH WITH ADJOINING EXISTING SODDED OR PAVED SURFACES.
4. AFTER SODDING HAS BEEN COMPLETED, ROLL HORIZONTAL SURFACE AREAS IN TWO DIRECTIONS PERPENDICULAR TO EACH OTHER WITH A 150 POUND SOD ROLLER. REPAIR AND RE-ROLL AREAS WITH DEPRESSIONS, LUMPS OR OTHER IRREGULARITIES. HEAVY ROLLING TO CORRECT IRREGULARITIES IN GRADE IS NOT PERMITTED.
5. WATER ALL SODDED AREAS IMMEDIATELY AFTER SOD LAYING TO OBTAIN MOISTURE PENETRATION THROUGH SOD INTO TOP 4" OF TOPSOIL.
6. PROVIDE ADEQUATE PROTECTION OF SODDED AREAS AGAINST TRESPASSING, EROSION AND DAMAGE OF ANY KIND. REMOVE THIS PROTECTION AFTER SODDED AREAS HAVE BEEN ACCEPTED BY THE OWNER.
7. REPLACE DAMAGED AREAS AT NO ADDITIONAL COST TO OWNER.

GROUNDCOVERS LEGEND

SYMBOL	BOTANICAL NAME/COMMON NAME	QTY	SIZE
	ROCK MULCH TO BE 3/4" - 1" SIZE 'SOUTHTOWN' CRUSHED ROCK FROM UTAH LANDSCAPE ROCK IN NEPHI, UTAH. IMPLEMENT IN AREA SHOWN AT A 3" DEPTH OVER WEED BARRIER FABRIC.	PER PLAN	PER PLAN
RM	ROCK MULCH TO BE 2" - 4" SIZE 'OAK CREEK PLUM' COBBLE ROCK FROM UTAH LANDSCAPE ROCK IN NEPHI, UTAH. IMPLEMENT IN AREA SHOWN AT A 6" DEPTH OVER WEED BARRIER FABRIC.	PER PLAN	PER PLAN
	DESERT SAGE BLUEGRASS FROM CHANSHARE SOD FARMS. INSTALL PER SOD LAYING NOTES	SOD ROLLS	SOD ROLLS
	DECORATIVE LANDSCAPE BOULDERS SIZE: 2', 3' AND 4' BOULDERS (MATCH/COMPLIMENT DECORATIVE ROCK MULCH IN PLANTING AREAS)	PER PLAN	PER PLAN

BROADLEAF DECIDUOUS LEGEND

SYMBOL	BOTANICAL NAME/COMMON NAME	QTY	SIZE
	ACER MIYABEI 'MORTON' STATE STREET STATE STREET MAPLE	8	2" CAL.
	CARPINUS CAROLINIANA 'RISING FIRE' RISING FIRE AMERICAN HORNBEAM	58	2" CAL.
	CERCIS CANADENSIS EASTERN REDBUD *	19	2" CAL.
		6	2" CAL.
	GLEDITSIA TRIACANTHOS 'IMPERIAL' IMPERIAL HONEYLOCUST		
		6	2" CAL.
	ZELKOVA SERRATA 'GREEN VASE' GREEN VASE ZELKOVA*	20	2" CAL.

CONIFER / EVERGREEN LEGEND

SYMBOL	BOTANICAL NAME/COMMON NAME	QTY	SIZE
	PICEA OMORIKA SERBIAN SPRUCE*	18	6-7' TALL
	PINUS NIGRA 'OREGON GREEN' OREGON GREEN PINE*	30	6-7' TALL

PERENNIAL LEGEND

SYMBOL	BOTANICAL NAME/COMMON NAME	QTY	SIZE
	HEMEROCALLIS 'STELLA D'ORO' STELLA D'ORO DAYLILY*	16	1 GAL.
	HEMEROCALLIS X 'ROSY RETURNS' ROSY RETURNS DAYLILY*	40	1 GAL.

GRASS LEGEND

SYMBOL	BOTANICAL NAME/COMMON NAME	QTY	SIZE
	CALAMAGROSTIS ACUTIFLORA 'KARL FOERSTER' FEATHER REED GRASS*	23	1 GAL.
	HELICTOTRICHON SEMPERVIRENS 'SAPPHIRE' BLUE OAT AVENA GRASS*	55	1 GAL.

SHRUB LEGEND

SYMBOL	BOTANICAL NAME/COMMON NAME	QTY	SIZE
	BUDDLEIA X 'FLUTTERBY PETITE' DWARF BUTTERFLY BUSH*	79	5 GAL.
	CERCOCARPUS INTRICATUS LITTLELEAF MOUNTAIN MAHOGANY*	12	5 GAL.
	FORSYTHIA X 'COURTASOL' GOLD TIDE FORSYTHIA	10	5 GAL.
	JUNIPERUS SABINA 'SCANDIA' SCANDIA JUNIPER*	40	5 GAL.
	PHYSOCARPUS OPULIFOLIUS 'LITTLE DEVIL' LITTLE DEVIL NINEBARK*	40	5 GAL.
	PINUS MUGO 'SLOWMOUND' SLOWMOUND MUGO PINE*	4	5 GAL.
	PRUNUS BESSEYI 'PAWNEE BUTTES' PAWNEE BUTTES SAND CHERRY*	92	5 GAL.
	RHUS AROMATICA 'GRO-LOW' GRO LOW SUMAC*	28	5 GAL.
	ROSA X 'WEKSCHNEEKOPPE' SNOW PAVEMENT RUGOSA SHRUB ROSES*	40	5 GAL.
	RIBES ALPINUM 'GREEN MOUND' GREEN MOUND CURRANT	63	5 GAL.
	SPIRAEA JAPONICA 'MAGIC CARPET' MAGIC CARPET SPIREA	6	5 GAL.
	SYMPHORICARPOS X CHENAULTII 'HANCOCK' HANCOCK CORALBERRY* (LOW-SPREADING)	31	5 GAL.

In Site
DESIGN GROUP
Landscape Architecture Land Planning
17 North 470 West American Fork, Utah 84003
801.756.5043 www.in-sitedesigngroup.com

N

20' 0 20' 40' 60'

SCALE: 1"=20'-0" ON 24X36 SHEET

CALL BEFORE YOU DIG
WE'LL MARK THE LAW
BLUE STAKES 1 800 662 4111

bhd ARCHITECTS
www.bhdarchitects.com
Phone 801.571.0010
Fax 801.571.0303
Toll Free 888.571.0010
65 East Wadsworth Park Drive
Suite 205 Draper, Utah 84020

LICENSED LANDSCAPE ARCHITECT
4884514
Cory B. Whiting
8-15-2024
STATE OF UTAH

THE CHURCH OF JESUS CHRIST OF LATTER-DAY SAINTS

Springwater 9
Vineyard UT Springwater Stake
Approx. 540 South Geneva Road
Vineyard, Utah 84059

Owner #: 502-2004
Plan Series: G300-MH-11
County Parcel: 39-228:0001
BHD #: 2346
Date: 15 Aug 2024

Drawing Issue and Revision Schedule

#	Date	Description
1	15 Aug 2024	Bid Documents

LANDSCAPE PLAN

LS101

Printed: 14 Aug 2024 5:27 PM

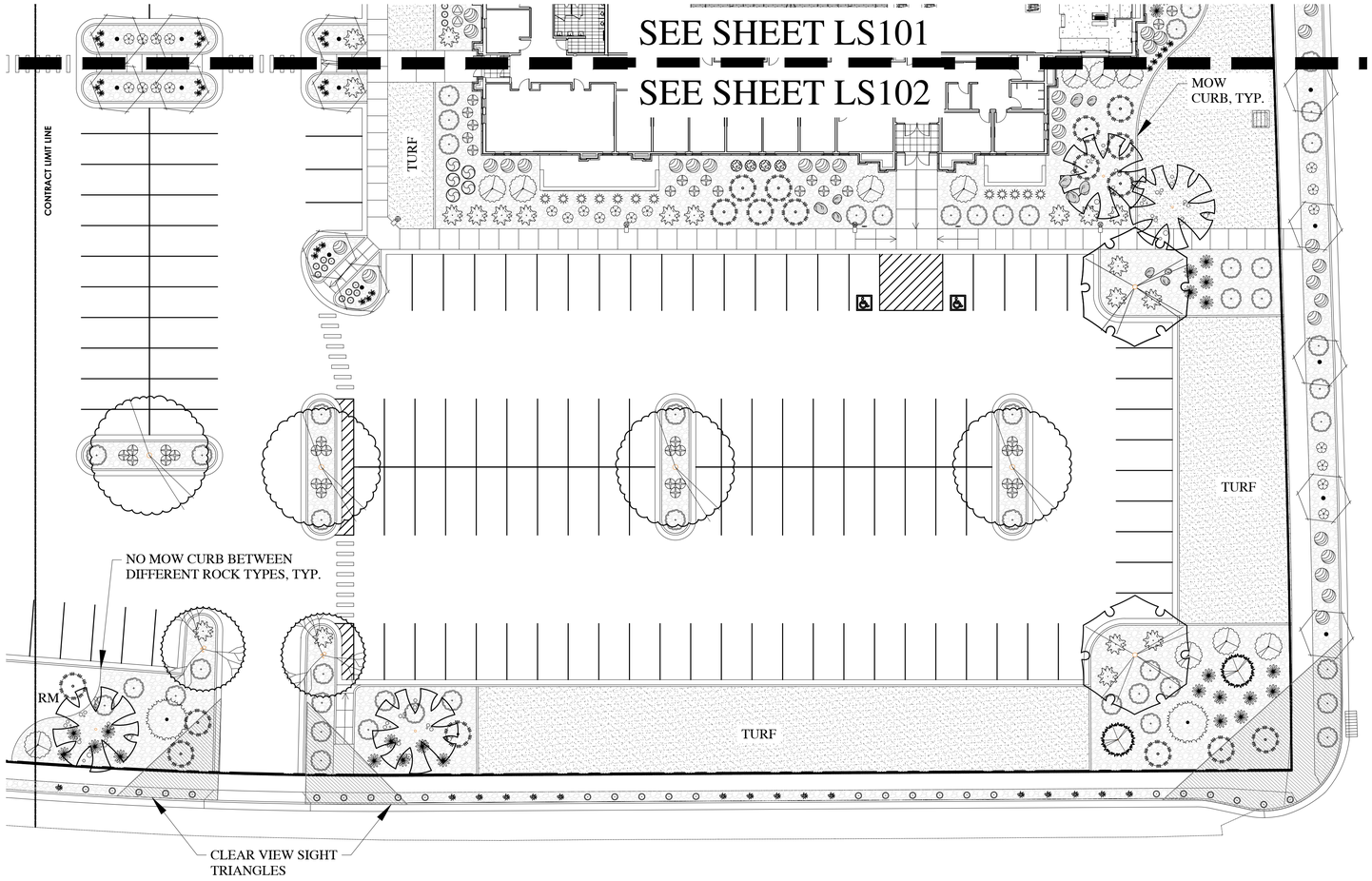

BROADLEAF DECIDUOUS LEGEND

SYMBOL	BOTANICAL NAME/COMMON NAME	QTY	SIZE
	ACER MIYABEI 'MORTON' STATE STREET STATE STREET MAPLE	8	2" CAL.
	CARPINUS CAROLINIANA 'RISING FIRE' RISING FIRE AMERICAN HORNBEAM	58	2" CAL.
	CERCIS CANADENSIS EASTERN REDBUD *	19	2" CAL.
		6	2" CAL.
	GLEDITSIA TRIACANTHOS 'IMPERIAL' IMPERIAL HONEYLOCUST	6	2" CAL.
	ZELKOVA SERRATA 'GREEN VASE' GREEN VASE ZELKOVA*	20	2" CAL.

CONIFER / EVERGREEN LEGEND

SYMBOL	BOTANICAL NAME/COMMON NAME	QTY	SIZE
	PICEA OMORIKA SERBIAN SPRUCE*	18	6-7' TALL
	PINUS NIGRA 'OREGON GREEN' OREGON GREEN PINE*	30	6-7' TALL

PERENNIAL LEGEND

SYMBOL	BOTANICAL NAME/COMMON NAME	QTY	SIZE
	HEMEROCALLIS 'STELLA D'ORO" STELLA D'ORO DAYLILY*	16	1 GAL.
	HEMEROCALLIS X 'ROSY RETURNS' ROSY RETURNS DAYLILY*	40	1 GAL.

GRASS LEGEND

SYMBOL	BOTANICAL NAME/COMMON NAME	QTY	SIZE
	CALAMAGROSTIS ACUTIFLORA 'KARL FOERSTER' FEATHER REED GRASS*	23	1 GAL.
	HELICTOTRICHON SEMPERVIRENS 'SAPPHIRE' BLUE OAT AVENA GRASS*	55	1 GAL.

SHRUB LEGEND

SYMBOL	BOTANICAL NAME/COMMON NAME	QTY	SIZE
	BUDDLEIA X 'FLUTTERBY PETITE' DWARF BUTTERFLY BUSH*	79	5 GAL.
	CERCOCARPUS INTRICATUS LITTLELEAF MOUNTAIN MAHOGANY*	12	5 GAL.
	FORSYTHIA X 'COURTASOL' GOLD TIDE FORSYTHIA	10	5 GAL.
	JUNIPERUS SABINA 'SCANDIA' SCANDIA JUNIPER*	40	5 GAL.
	PHYSOCARPUS OPULIFOLIUS 'LITTLE DEVIL' LITTLE DEVIL NINEBARK*	40	5 GAL.
	PINUS MUGO 'SLOWMOUND' SLOWMOUND MUGO PINE*	4	5 GAL.
	PRUNUS BESSEYI 'PAWNEE BUTTES' PAWNEE BUTTES SAND CHERRY*	92	5 GAL.
	RHUS AROMATICA 'GRO-LOW' GRO LOW SUMAC*	28	5 GAL.
	ROSA X 'WEKSCHNEEKOPPE' SNOW PAVEMENT RUGOSA SHRUB ROSES*	40	5 GAL.
	RIBES ALPINUM 'GREEN MOUND' GREEN MOUND CURRANT	63	5 GAL.
	SPIRAEA JAPONICA 'MAGIC CARPET' MAGIC CARPET SPIREA	6	5 GAL.
	SYMPHORICARPOS X CHENAULTII 'HANCOCK' HANCOCK CORALBERRY* (LOW-SPREADING)	31	5 GAL.

DESIGN CRITERIA

ECO-REGION	10.1 NORTHERN COLD DESERT
CLIMATE	U.S. HARDINESS ZONE 5
ZONING ORDINANCE	VINEYARD CITY
WATER AVAILABILITY	NA
SOIL TYPE	NA
SLOPES	SEE GRADING PLAN
WIND	SOUTH PREVAILING
SETBACKS/EASEMENTS	NA
MICROCLIMATES	NA
SOIL PH	NA
LAWN AREA	28% OF TOTAL LANDSCAPE (27,139 SQ. FT.)
UNDEVELOPED	NA
PROPERTY IRRIGATION SYSTEM	AUTOMATED SYSTEM WITH SMART CONTROLLER

LANDSCAPE DATA

TOTAL SITE AREA	415,178 SQ.FT.*		9.5 ACRES
TOTAL LANDSCAPE AREA	96,139 SQ.FT.*		23%
PLANTER AREA	69,000 SQ.FT.		72%
LAWN AREA	27,139 SQ.FT.		28%
TREES ON SITE	175**		
		TOTAL REQ'D = NA	PROVIDED = 175
		DECIDUOUS REQ'D = NA	PROVIDED = 127
		EVERGREEN REQ'D = NA	PROVIDED = 48
		SHRUBS REQ'D = NA	PROVIDED = 1,404
		DROUGHT TOLERANT REQ'D = NA	
ADDITIONAL INFO	NA	DROUGHT TOLERANT PROVIDED = 1,297 (92%)	

* PARK STRIP LANDSCAPE OF 5,826 SQ.FT. NOT INCLUDED IN THIS TOTAL
** TREE/PLANTING COUNT INCLUDES OREM 3RD BUILDING SECTION OF SITE

LANDSCAPE NOTES

1. STOCKPILED, SCREENED TOPSOIL TO BE IMPLEMENTED IN ALL PLANTING AREAS AT THE FOLLOWING DEPTHS: 12" IN ALL SHRUB BEDS, 5" IN ALL LAWN AREAS.
2. LAWN TO BE A DESERT SAGE BLUEGRASS BLEND (FROM CHANSHARE SOD) AND BE IMPLEMENTED AS SOD. REFER TO SOD LAYING NOTES FOR MORE INFORMATION.
3. 6" CONCRETE MOWCURB TO BE IMPLEMENTED BETWEEN ALL SHRUB BED AND LAWN AREAS AS SHOWN ON PLAN.
4. ROCK MULCH TO BE IMPLEMENTED IN ALL PLANTER BEDS AT DEPTHS NOTED IN LEGEND. ROCK MULCH TO BE CLEAN AND FREE OF DIRT AND DEBRIS, PLACED AT A UNIFORM DEPTH AND RAKED SMOOTH. INSTALL WEED BARRIER FABRIC UNDER ALL ROCK MULCH.
5. ALL TREES TO BE STAKED AT TIME OF PLANTING. SEE DETAILS FOR SPECIFICS. REMOVE STAKING WITHIN FIRST YEAR OR WHEN TREE IS ESTABLISHED.
6. NO LANDSCAPING OR OTHER OBSTRUCTION IN EXCESS OF 3' ABOVE FINISHED GRADE SHALL BE IMPLEMENTED IN CLEAR VIEW TRIANGLES.
7. MATERIAL QUANTITIES AND COUNTS ON LEGENDS AND NOTES ARE FOR CONVENIENCE ONLY. LANDSCAPE CONTRACTOR RESPONSIBLE TO VERIFY ALL COUNTS AND QUANTITIES ON PLANS.

SOD LAYING NOTES

1. LAY SOD WITHIN 24 HOURS OF BEING LIFTED.
2. LAY SOD IN ROWS WITH JOINTS STAGGERED. BUTT SECTIONS CLOSELY WITHOUT OVERLAPPING OR LEAVING GAPS BETWEEN SECTIONS. CUT OUT IRREGULAR OR THIN SECTIONS WITH A SHARP KNIFE.
3. LAY SOD FLUSH WITH ADJOINING EXISTING SODDED OR PAVED SURFACES.
4. AFTER SODDING HAS BEEN COMPLETED, ROLL HORIZONTAL SURFACE AREAS IN TWO DIRECTIONS PERPENDICULAR TO EACH OTHER WITH A 150 POUND SOD ROLLER. REPAIR AND RE-ROLL AREAS WITH DEPRESSIONS, LUMPS OR OTHER IRREGULARITIES. HEAVY ROLLING TO CORRECT IRREGULARITIES IN GRADE IS NOT PERMITTED.
5. WATER ALL SODDED AREAS IMMEDIATELY AFTER SOD LAYING TO OBTAIN MOISTURE PENETRATION THROUGH SOD INTO TOP 4" OF TOPSOIL.
6. PROVIDE ADEQUATE PROTECTION OF SODDED AREAS AGAINST TRESPASSING, EROSION AND DAMAGE OF ANY KIND. REMOVE THIS PROTECTION AFTER SODDED AREAS HAVE BEEN ACCEPTED BY THE OWNER.
7. REPLACE DAMAGED AREAS AT NO ADDITIONAL COST TO OWNER.

GROUNDCOVERS LEGEND

SYMBOL	BOTANICAL NAME/COMMON NAME	QTY	SIZE
	ROCK MULCH TO BE 3/4" - 1" SIZE 'SOUTHTOWN' CRUSHED ROCK FROM UTAH LANDSCAPE ROCK IN NEPHI, UTAH. IMPLEMENT IN AREA SHOWN AT A 3" DEPTH OVER WEED BARRIER FABRIC.	PER PLAN	PER PLAN
RM	ROCK MULCH TO BE 2" - 4" SIZE 'OAK CREEK PLUM' COBBLE ROCK FROM UTAH LANDSCAPE ROCK IN NEPHI, UTAH. IMPLEMENT IN AREA SHOWN AT A 6" DEPTH OVER WEED BARRIER FABRIC.	PER PLAN	PER PLAN
	DESERT SAGE BLUEGRASS FROM CHANSHARE SOD FARMS. INSTALL PER SOD LAYING NOTES	SOD ROLLS	SOD ROLLS
	DECORATIVE LANDSCAPE BOULDERS SIZE: 2', 3' AND 4' BOULDERS (MATCH/COMPLIMENT DECORATIVE ROCK MULCH IN PLANTING AREAS)	PER PLAN	PER PLAN

In Site DESIGN GROUP
Landscape Architecture Land Planning
17 North 470 West American Fork, Utah 84003
801.756.5043 www.in-sitedesigngroup.com

N

CALL BEFORE YOU DIG! IT'S THE LAW BLUE STAKES 1 800 662 4111

20' 0 20' 40' 60'

SCALE: 1"=20'-0" ON 24X36 SHEET

bhd ARCHITECTS
www.bhdarchitects.com
Phone 801.571.0010
Fax 801.571.0303
Toll Free 888.571.0010
65 East Wadsworth Park Drive
Suite 205 Draper, Utah 84020

LICENSED LANDSCAPE ARCHITECT # 4884514 Cory B. Whiting 8-15-2024 STATE OF UTAH

THE CHURCH OF JESUS CHRIST OF LATTER-DAY SAINTS

Springwater 9
Vineyard UT Springwater Stake

Approx. 542 South Geneva Road
Vineyard, Utah 84059

BHD #: 2346
Date: 15 Aug 2024
County Parcel: 39-228-0001
Plan Series: G300-MH-1
Owner #: 502-2004

Drawing Issue and Revision Schedule

#	Date	Description
1	15 Aug 2024	Bid Documents

LANDSCAPE PLAN

LS102

Printed: 14 Aug 2024 5:27 PM

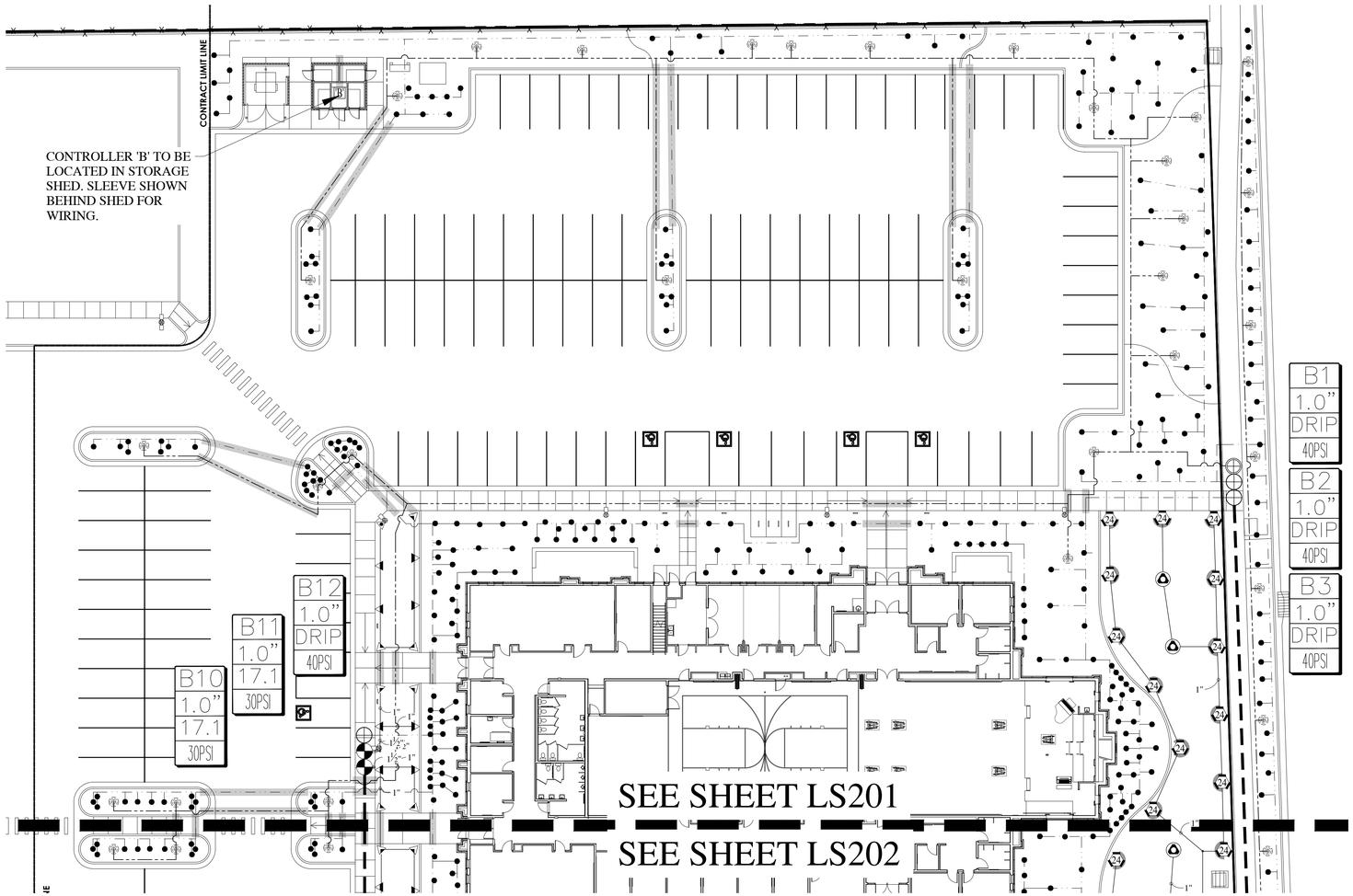

IRRIGATION NOTES

1. ALL WORK SHALL BE IN ACCORDANCE WITH APPLICABLE CITY AND/OR COUNTY CODES. THE CONTRACTOR SHALL APPLY AND PAY FOR ALL NECESSARY PERMITS.
2. CONTRACTOR SHALL HAVE ALL UTILITIES BLUE STAKED BEFORE DIGGING. ANY DAMAGE TO THE UTILITIES SHALL BE REPAIRED AT THE EXPENSE OF CONTRACTOR WITH NO EXTRA COST TO THE OWNER.
3. PROVIDE AN AS-BUILT, REPRODUCIBLE DRAWING TO OWNER SHOWING ALL DRAINS, HEADS, VALVES, AND PIPES. PROVIDE INSTRUCTIONS TO MAINTENANCE PERSONNEL FOR WINTERIZATION. SPRINKLER SYSTEM TO BE BLOWN OUT WITH AN AIR COMPRESSOR EACH FALL.
4. CONTRACTOR IS RESPONSIBLE FOR ENSURING ACCURATE COUNTS AND QUANTITIES OF ALL IRRIGATION MATERIALS FOR BIDDING AND INSTALLATION PURPOSES.
5. CONTRACTOR SHALL BUILD IRRIGATION SYSTEM WITH HEAD TO HEAD COVERAGE FOR ALL LAWN AREAS. HE-VAN AND/OR U-SERIES NOZZLES SHALL BE USED WHERE NECESSARY TO PROVIDED HEAD TO HEAD COVERAGE AND/OR TO MINIMIZE OVER SPRAY ONTO STREETS, SIDEWALKS AND/OR BUILDINGS.
6. LANDSCAPE CONTRACTOR (L.C.) SHALL PROVIDE AND INSTALL SLEEVES FOR ALL PIPES AND WIRES UNDER PAVEMENT AND SIDEWALKS. SLEEVES SHALL BE 2 SIZES LARGER THAN PIPE INSIDE. ALL WIRE SHALL BE IN SEPARATE SLEEVES (NOT SHOWN). PLACE JUNCTION BOXES WHERE NECESSARY TO MINIMIZE LONG RUNS OR AT DIRECTIONAL CHANGES AS NECESSARY.
7. ALL SLEEVES INSTALLED SHALL BE DUCT TAPED TO PREVENT DIRT OR OTHER DEBRIS ENTERING PIPE. ALL SLEEVES SHALL BE IDENTIFIED BY WOOD OR PVC STAKES AND BE SPRAY PAINTED WITH MARKING PAINT. REMOVE STAKES ONCE IRRIGATION SYSTEM IS COMPLETE.
8. MAIN LINE SHALL BE 1.5" (UNLESS OTHERWISE DIRECTED). LATERAL LINES SHALL BE NO SMALLER THAN 1". PIPES SHALL CARRY NO MORE THAN THE FOLLOWING: 1" PIPE MAX. 13 GPM, 1-1/2" PIPE MAX. 30 GPM. ADJUST LOCATION OF MAINLINE AND LATERAL LINES AS NECESSARY IN ORDER TO AVOID PLACING BOULDERS, TREES AND SHRUBS DIRECTLY OVER MAINLINE AND LATERAL LINES.
9. MAIN LINES SHALL BE 18" DEEP MIN. AND LATERAL LINES 12" DEEP MIN. NO ROCK GREATER THAN 3/4" DIAMETER SHALL BE ALLOWED IN TRENCHES.
10. PLACE PIPES, VALVE BOXES AND ALL OTHER SPRINKLER CONSTRUCTION IN LANDSCAPE AREAS. ALL PIPES SHALL BE ON PROPERTY OF OWNER. MODIFY LOCATION OF VALVE BOXES AS NECESSARY IN ORDER TO AVOID TREES AND SHRUBS PER PLANTING PLAN. USE GREEN BOXES IN LAWN AREAS. USE TAN BOXES IN BED AREAS.
11. LANDSCAPE ARCHITECT SHALL VISUALLY INSPECT ALL TRENCHES PRIOR TO BACKFILLING. CONTRACTOR SHALL GIVE LANDSCAPE ARCHITECT MIN. 72 HR. NOTICE BEFORE INSPECTION IS TO BE MADE. CONTRACTOR SHALL PRESSURE TEST MAINLINE FOR LEAKS PRIOR TO BACKFILLING.
12. ALL SPRINKLERS SHALL BE ADJUSTED ON-SITE AS NECESSARY TO AVOID ANY WATER SPRAYING ONTO STREETS, SIDEWALKS AND/OR BUILDINGS.
13. ACTUAL INSTALLATION OF IRRIGATION SYSTEM MAY VARY SOMEWHAT FROM PLANS. CONTRACTOR IS RESPONSIBLE TO MAKE NECESSARY ADJUSTMENTS TO ENSURE PROPER COVERAGE OF ALL LANDSCAPED AREAS.
14. LANDSCAPE CONTRACTOR SHALL MATCH PRECIPITATION RATES AS MUCH AS POSSIBLE FOR ALL LANDSCAPED AREAS.
15. INSTALL ALL HEADS 2" AWAY FROM ALL WALKS AND WALLS. VALVE BOXES SHALL BE INSTALLED SQUARED TO AND 6" MIN. AWAY FROM WALKS AND WALLS.
16. CONTRACTOR TO INSTALL NETAFIM TECHLINE CV TUBING ON-SURFACE DRIP LINE FOR TREES.
17. POWER TO CONTROLLER TO BE PROVIDED BY ELECTRICAL CONTRACTOR. OWNER TO SPECIFY EXACT LOCATION OF CONTROLLER. IF MOUNTED OUTSIDE, CONTROLLER TO BE MOUNTED IN WEATHERPROOF LOCKING WALL MOUNTED CABINET PER MANUFACTURERS INSTRUCTIONS. LANDSCAPE CONTRACTOR SHALL ENSURE THE CONTROLLER IS GROUNDED PER LOCAL CODE AND PER MANUFACTURER SPEC.
18. IF THE STATIC PRESSURE AT THE POINT OF CONNECTION EXCEEDS 100 PSI, INSTALL A BRASS PRESSURE REDUCER IN-LINE WITH THE RPZ PER MANUFACTURER SPECS. INSTALL THE RPZ AND PRESSURE REDUCER IN A LOCKING METAL CABINET. ADJUST PRESSURE AS REQUIRED FOR NORMAL OPERATION OF THE IRRIGATION SYSTEM.
19. VALVE CONTROL WIRING SHALL BE 14 GAUGE COPPER SINGLE STRAND WIRE. WIRE SHALL BE WHITE FOR COMMON AND COLOR FOR CONTROL.
20. INSTALL THE PRS-D OPTION FOR SPRAY VALVES IF THE STATIC PRESSURE AT SPRAY HEADS EXCEEDS 70 PSI. INSTALL THE PRS-D OPTION FOR ROTOR VALVES IF THE STATIC PRESSURE AT ROTOR EXCEEDS 75 PSI.

IRRIGATION LEGEND

SYMBOL	MANUFACTURER-MODEL NUMBER	PAT.	RD.	PSI	GPM Q	T	H	TT	TQ	F	DRIP GPH	DETAILS	REMARKS
●	RAINBIRD XB-PC	FULL	--	40	--	--	--	--	--	--	2.0	18	SEE LEGEND BELOW FOR
⊛	DRIPLINE: NETAFIM TLCV-09-12	FULL	--	40	--	--	--	--	--	--	.9/12"	15-17	ADDITIONAL INFORMATION.
▲	RAIN BIRD 1806-P45 POP-UP ROTARY 18	FULL	13' - 18'	45	.5	--	--	--	--	1.85	--	20-21	ADJUST NOZZLES AS
◆	RAIN BIRD 1806-P45 POP-UP ROTARY 24	Q,H,F	17' - 24'	45	.84	--	1.68	--	--	3.48	--	20-21	NEEDED TO KEEP WATER
▽	RAINBIRD 1806-PRS POP-UP W/15 SERIES NOZZLE	Q,T,H	15'	30	.92	1.23	1.85	--	--	--	--	20-21	OFF SIDEWALK, ASPHALT
▽	RAIN BIRD 5006-PL-R-SS 25 MPR SERIES NOZZLES	Q,H,F	25'	45	1.00	--	1.98	--	--	3.82	--	22-22	AND BUILDING.
▽	RAIN BIRD 5006-PL-R-SS 35 MPR SERIES NOZZLES	Q,H,F	35'	45	1.92	--	3.81	--	--	--	--	22-22	
'B'	CONTROLLER: WEATHERTRAK ET PRO3 (WTPRO3-C-12-CWM)											5-7	COORDINATE LOCATION WITH OWNER
◉	1" RAINBIRD QUICK COUPLER VALVE, MODEL 44-LRC											10	IN 10" RND. VALVE BOX
⊠	1-1/2" WILKENS 375B RPZ BACKFLOW PREVENTOR IN GUARDSHACK ENCLOSURE											4,11	IN STRONGBOX ENCLOSURE
⊕	REMOTE CONTROL VALVE: RAINBIRD PEB-PRS-D AUTOMATIC CONTROL VALVE; SIZE PER PLAN											13	JUMBO VALVE BOX
⊕	DRIP CONTROL ZONE KIT: RAINBIRD XCZ-100-PRB-COM PER PLANS											14	JUMBO VALVE BOX
⊕	DRIP CONTROL ZONE KIT: RAINBIRD XCZ-100-PRB-COM PER PLANS (FOR TREES)											14	JUMBO VALVE BOX
⋈	1-1/2" STOP & WASTE TO BE INSTALLED BY GENERAL CONTRACTOR. SEE CIVIL DRAWINGS.											4,11	BY GENERAL CONTRACTOR
⊙	HYDROMETER: NETAFIM LHM15TG1-MEL (WITH PE-39 FLOW SENSOR CABLE PER WEATHERTRAK SPECS.)											4,9,11	REFERENCE DETAILS
◎	DRAIN VALVE: GRACO WELD TOP											5, 7	REFERENCE DETAILS
———	MAINLINE: 1-1/2" SCH 40 PVC OR OTHERWISE NOTED.											1, 2	REFERENCE DETAILS
———	LATERAL LINE FOR ROTORS AND/OR SPRAYS: SCHEDULE 40 PVC											1, 2	REFERENCE DETAILS
- - - -	TREE DRIP LATERAL LINE (SIZE AS REQUIRED)											1,2,15,17-18	REFERENCE DETAILS
— · — · —	SHRUB DRIP LATERAL LINE (SIZE AS REQUIRED)											1,2,15,17-18	REFERENCE DETAILS
	SLEEVE (SIZE TO MIN. 2X DIA. OF PIPE WITHIN THE SLEEVE). ADD ADDITIONAL SLEEVES AS REQ.											3	REFERENCE DETAILS
NOT SHOWN	WIRE CHASE, SIZE TO BE TWICE THE DIA. OF THE WIRE BUNDLE WITHIN DOWN TO 1" DIA. MIN.											1,2	REFERENCE DETAILS
NOT SHOWN	14 GAUGE SOLID COPPER SINGLE STRAND WIRE.											1,2	REFERENCE DETAILS

DRIP EMITTER LEGEND

PLANT TYPE	EMITTER QTY	EMITTER TYPE
PERENNIALS/GRASSES	1	XB-20 (2GPH)
ALL SHRUBS	1	XB-20 (2GPH)
TREES IN PLANTER AREAS	1	XB-10 (1GPH)

NOTE:
1. EMITTERS LISTED ARE AVAILABLE FROM GPH AND RAINBIRD.
2. EMITTERS ARE NOT NECESSARY FOR TREES IN LAWN AREAS.
3. INSTALL NETAFIM TLCV IN ADDITION TO XB-10 EMITTERS PER DETAILS ON SHEET LS402.

VALVE ID TAG

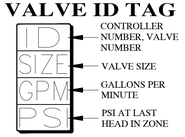

In Site
DESIGN GROUP
Landscape Architecture Land Planning
17 North 470 West American Fork, Utah 84003
801.756.5043 www.in-sitedesigngroup.com

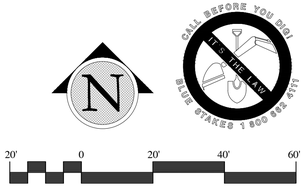

SCALE: 1"=20'-0" ON 24X36 SHEET

bhd ARCHITECTS
www.bhdarchitects.com
Phone 801.571.0010
Fax 801.571.0303
Toll Free 888.571.0010
65 East Wadsworth Park Drive
Suite 205 Draper, Utah 84020

LICENSED LANDSCAPE ARCHITECT # 4884514 Cory B. Whiting 8-15-2024 STATE OF UTAH

THE CHURCH OF JESUS CHRIST OF LATTER-DAY SAINTS

Springwater 9
Vineyard UT Springwater Stake
Approx. 542 South Geneva Road
Vineyard, Utah 84059

Owner #: 502-2004
Plan Series: G300-MH-1-1
County Parcel: 39:228:0001
BHD #: 2346
Date: 15 Aug 2024

Drawing Issue and Revision Schedule

#	Date	Description
1	15 Aug 2024	Bid Documents

IRRIGATION PLAN

LS201

Printed: 14 Aug 2024 5:27 PM

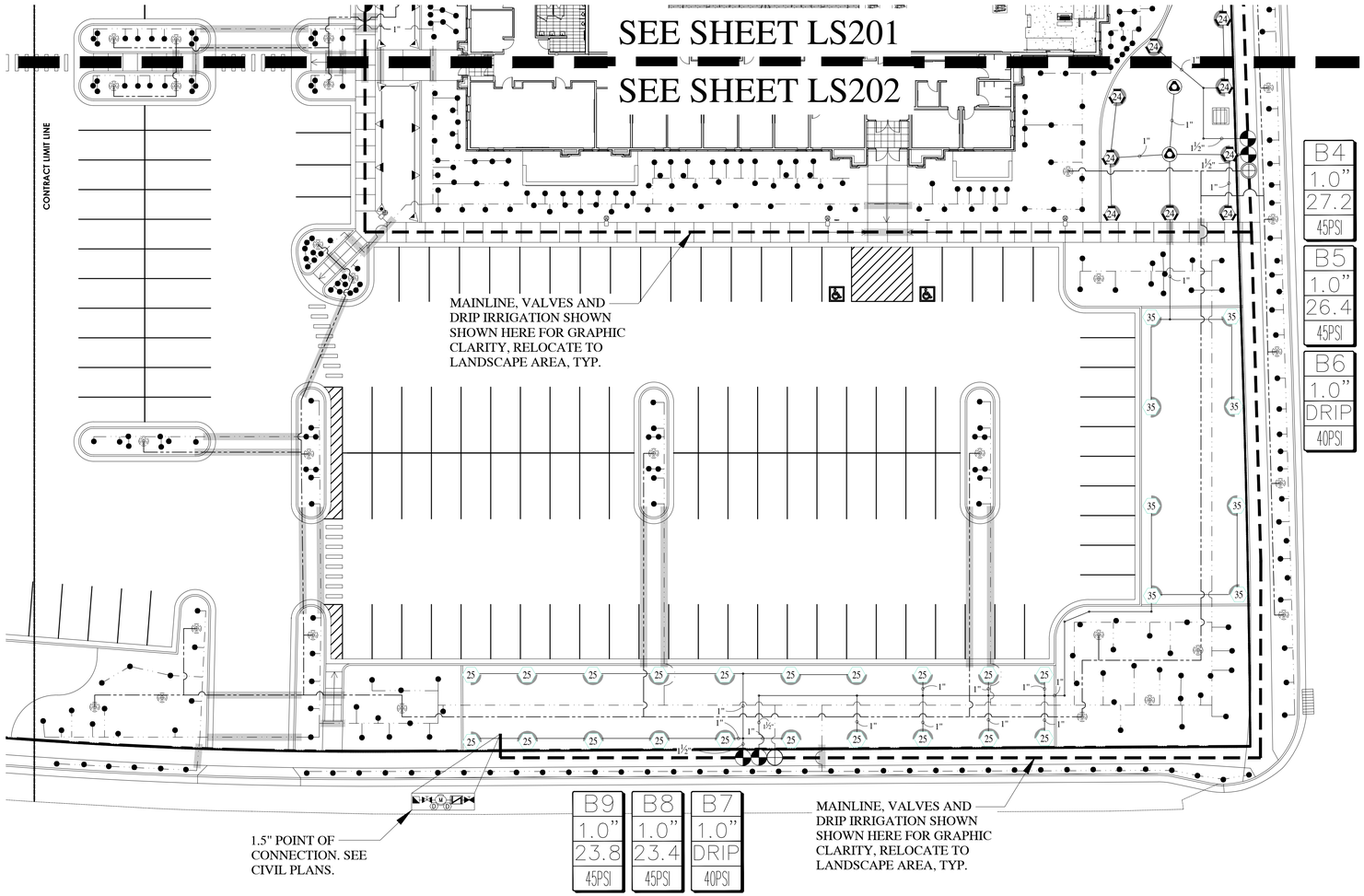

IRRIGATION NOTES

1. ALL WORK SHALL BE IN ACCORDANCE WITH APPLICABLE CITY AND/OR COUNTY CODES. THE CONTRACTOR SHALL APPLY AND PAY FOR ALL NECESSARY PERMITS.
2. CONTRACTOR SHALL HAVE ALL UTILITIES BLUE STAKED BEFORE DIGGING. ANY DAMAGE TO THE UTILITIES SHALL BE REPAIRED AT THE EXPENSE OF CONTRACTOR WITH NO EXTRA COST TO THE OWNER.
3. PROVIDE AN AS-BUILT, REPRODUCIBLE DRAWING TO OWNER SHOWING ALL DRAINS, HEADS, VALVES, AND PIPES. PROVIDE INSTRUCTIONS TO MAINTENANCE PERSONNEL FOR WINTERIZATION. SPRINKLER SYSTEM TO BE BLOWN OUT WITH AN AIR COMPRESSOR EACH FALL.
4. CONTRACTOR IS RESPONSIBLE FOR ENSURING ACCURATE COUNTS AND QUANTITIES OF ALL IRRIGATION MATERIALS FOR BIDDING AND INSTALLATION PURPOSES.
5. CONTRACTOR SHALL BUILD IRRIGATION SYSTEM WITH HEAD TO HEAD COVERAGE FOR ALL LAWN AREAS. HE-VAN AND/OR U-SERIES NOZZLES SHALL BE USED WHERE NECESSARY TO PROVIDED HEAD TO HEAD COVERAGE AND/OR TO MINIMIZE OVER SPRAY ONTO STREETS, SIDEWALKS AND/OR BUILDINGS.
6. LANDSCAPE CONTRACTOR (L.C.) SHALL PROVIDE AND INSTALL SLEEVES FOR ALL PIPES AND WIRES UNDER PAVEMENT AND SIDEWALKS. SLEEVES SHALL BE 2 SIZES LARGER THAN PIPE INSIDE. ALL WIRE SHALL BE IN SEPARATE SLEEVES (NOT SHOWN). PLACE JUNCTION BOXES WHERE NECESSARY TO MINIMIZE LONG RUNS OR AT DIRECTIONAL CHANGES AS NECESSARY.
7. ALL SLEEVES INSTALLED SHALL BE DUCT TAPED TO PREVENT DIRT OR OTHER DEBRIS ENTERING PIPE. ALL SLEEVES SHALL BE IDENTIFIED BY WOOD OR PVC STAKES AND BE SPRAY PAINTED WITH MARKING PAINT. REMOVE STAKES ONCE IRRIGATION SYSTEM IS COMPLETE.
8. MAIN LINE SHALL BE 1.5" (UNLESS OTHERWISE DIRECTED). LATERAL LINES SHALL BE NO SMALLER THAN 1". PIPES SHALL CARRY NO MORE THAN THE FOLLOWING: 1" PIPE MAX. 13 GPM, 1-1/2" PIPE MAX. 30 GPM. ADJUST LOCATION OF MAINLINE AND LATERAL LINES AS NECESSARY IN ORDER TO AVOID PLACING BOULDERS, TREES AND SHRUBS DIRECTLY OVER MAINLINE AND LATERAL LINES.
9. MAIN LINES SHALL BE 18" DEEP MIN. AND LATERAL LINES 12" DEEP MIN. NO ROCK GREATER THAN 3/4" DIAMETER SHALL BE ALLOWED IN TRENCHES.
10. PLACE PIPES, VALVE BOXES AND ALL OTHER SPRINKLER CONSTRUCTION IN LANDSCAPE AREAS. ALL PIPES SHALL BE ON PROPERTY OF OWNER. MODIFY LOCATION OF VALVE BOXES AS NECESSARY IN ORDER TO AVOID TREES AND SHRUBS PER PLANTING PLAN. USE GREEN BOXES IN LAWN AREAS. USE TAN BOXES IN BED AREAS.
11. LANDSCAPE ARCHITECT SHALL VISUALLY INSPECT ALL TRENCHES PRIOR TO BACKFILLING. CONTRACTOR SHALL GIVE LANDSCAPE ARCHITECT MIN. 72 HR. NOTICE BEFORE INSPECTION IS TO BE MADE. CONTRACTOR SHALL PRESSURE TEST MAINLINE FOR LEAKS PRIOR TO BACKFILLING.
12. ALL SPRINKLERS SHALL BE ADJUSTED ON-SITE AS NECESSARY TO AVOID ANY WATER SPRAYING ONTO STREETS, SIDEWALKS AND/OR BUILDINGS.
13. ACTUAL INSTALLATION OF IRRIGATION SYSTEM MAY VARY SOMEWHAT FROM PLANS. CONTRACTOR IS RESPONSIBLE TO MAKE NECESSARY ADJUSTMENTS TO ENSURE PROPER COVERAGE OF ALL LANDSCAPED AREAS.
14. LANDSCAPE CONTRACTOR SHALL MATCH PRECIPITATION RATES AS MUCH AS POSSIBLE FOR ALL LANDSCAPED AREAS.
15. INSTALL ALL HEADS 2" AWAY FROM ALL WALKS AND WALLS. VALVE BOXES SHALL BE INSTALLED SQUARED TO AND 6" MIN. AWAY FROM WALKS AND WALLS.
16. CONTRACTOR TO INSTALL NETAFIM TECHLINE CV TUBING ON-SURFACE DRIP LINE FOR TREES.
17. POWER TO CONTROLLER TO BE PROVIDED BY ELECTRICAL CONTRACTOR. OWNER TO SPECIFY EXACT LOCATION OF CONTROLLER. IF MOUNTED OUTSIDE, CONTROLLER TO BE MOUNTED IN WEATHERPROOF LOCKING WALL MOUNTED CABINET PER MANUFACTURERS INSTRUCTIONS. LANDSCAPE CONTRACTOR SHALL ENSURE THE CONTROLLER IS GROUNDED PER LOCAL CODE AND PER MANUFACTURER SPEC.
18. IF THE STATIC PRESSURE AT THE POINT OF CONNECTION EXCEEDS 100 PSI, INSTALL A BRASS PRESSURE REDUCER IN-LINE WITH THE RPZ PER MANUFACTURER SPECS. INSTALL THE RPZ AND PRESSURE REDUCER IN A LOCKING METAL CABINET. ADJUST PRESSURE AS REQUIRED FOR NORMAL OPERATION OF THE IRRIGATION SYSTEM.
19. VALVE CONTROL WIRING SHALL BE 14 GAUGE COPPER SINGLE STRAND WIRE. WIRE SHALL BE WHITE FOR COMMON AND COLOR FOR CONTROL.
20. INSTALL THE PRS-D OPTION FOR SPRAY VALVES IF THE STATIC PRESSURE AT SPRAY HEADS EXCEEDS 70 PSI. INSTALL THE PRS-D OPTION FOR ROTOR VALVES IF THE STATIC PRESSURE AT ROTOR EXCEEDS 75 PSI.

IRRIGATION LEGEND

SYMBOL	MANUFACTURER-MODEL NUMBER	PAT.	RD.	PSI	GPM Q	T	H	TT	TQ	F	DRIP GPH	DETAILS	REMARKS
●	RAINBIRD XB-PC	FULL	--	40	--	--	--	--	--	--	2.0	18	SEE LEGEND BELOW FOR
(RB)	DRIPLINE: NETAFIM TLCV-09-12	FULL	--	40	--	--	--	--	--	--	.9/12"	15-17	ADDITIONAL INFORMATION.
▲	RAIN BIRD 1806-P45 POP-UP ROTARY 18	FULL	13' - 18'	45	.5	--	--	--	--	1.85	--	20-21	ADJUST NOZZLES AS
◆●▲	RAIN BIRD 1806-P45 POP-UP ROTARY 24	Q,H,F	17' - 24'	45	.84	--	1.68	--	--	3.48	--	20-21	NEEDED TO KEEP WATER
▽▼★	RAINBIRD 1806-PRS POP-UP W/15 SERIES NOZZLE	Q,T,H	15'	30	.92	1.23	1.85	--	--	--	--	20-21	OFF SIDEWALK, ASPHALT
25 25 25	RAIN BIRD 5006-PL-R-SS 25 MPR SERIES NOZZLES	Q,H,F	25'	45	1.00	--	1.98	--	--	3.82	--	22-22	AND BUILDING.
35 35	RAIN BIRD 5006-PL-R-SS 35 MPR SERIES NOZZLES	Q,H,F	35'	45	1.92	--	3.81	--	--	--	--	22-22	
B	CONTROLLER: WEATHERTRAK ET PRO3 (WTPRO3-C-12-CWM)											5-7	COORDINATE LOCATION WITH OWNER
	1" RAINBIRD QUICK COUPLER VALVE, MODEL 44-LRC											10	IN 10" RND. VALVE BOX
	1-1/2" WILKENS 375B RPZ BACKFLOW PREVENTOR IN GUARDSHACK ENCLOSURE.											4,11	IN STRONGBOX ENCLOSURE
	REMOTE CONTROL VALVE: RAINBIRD PEB-PRS-D AUTOMATIC CONTROL VALVE; SIZE PER PLAN											13	JUMBO VALVE BOX
	DRIP CONTROL ZONE KIT: RAINBIRD XCZ-100-PRB-COM PER PLANS											14	JUMBO VALVE BOX
	DRIP CONTROL ZONE KIT: RAINBIRD XCZ-100-PRB-COM PER PLANS (FOR TREES)											14	JUMBO VALVE BOX
	1-1/2" STOP & WASTE TO BE INSTALLED BY GENERAL CONTRACTOR, SEE CIVIL DRAWINGS.											4,11	BY GENERAL CONTRACTOR
	HYDROMETER: NETAFIM LHM15TG1-MEL (WITH PE-39 FLOW SENSOR CABLE PER WEATHERTRAK SPECS.)											4,9,11	REFERENCE DETAILS
	DRAIN VALVE: GRACO WELD TOP											5, 7	REFERENCE DETAILS
	MAINLINE: 1-1/2" SCH 40 PVC OR OTHERWISE NOTED.											1, 2	REFERENCE DETAILS
	LATERAL LINE FOR ROTORS AND/OR SPRAYS: SCHEDULE 40 PVC											1, 2	REFERENCE DETAILS
	TREE DRIP LATERAL LINE (SIZE AS REQUIRED)											1,2,15,17-18	REFERENCE DETAILS
	SHRUB DRIP LATERAL LINE (SIZE AS REQUIRED)											1,2,15,17-18	REFERENCE DETAILS
	SLEEVE (SIZE TO MIN. 2X DIA. OF PIPE WITHIN THE SLEEVE). ADD ADDITIONAL SLEEVES AS REQ.											3	REFERENCE DETAILS
NOT SHOWN	WIRE CHASE. SIZE TO BE TWICE THE DIA. OF THE WIRE BUNDLE WITHIN DOWN TO 1" DIA. MIN.											1,2	REFERENCE DETAILS
NOT SHOWN	14 GAUGE SOLID COPPER SINGLE STRAND WIRE.											1,2	REFERENCE DETAILS

DRIP EMITTER LEGEND

PLANT TYPE	EMITTER QTY	EMITTER TYPE
PERENNIALS/GRASSES	1	XB-20 (2GPH)
ALL SHRUBS	1	XB-20 (2GPH)
TREES IN PLANTER AREAS	1	XB-10 (1GPH)

NOTE:
1. EMITTERS LISTED ARE AVAILABLE FROM GPH AND RAINBIRD.
2. EMITTERS ARE NOT NECESSARY FOR TREES IN LAWN AREAS.
3. INSTALL NETAFIM TLCV IN ADDITION TO XB-10 EMITTERS PER DETAILS ON SHEET LS402.

VALVE ID TAG

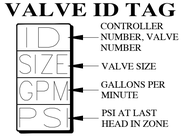

In Site DESIGN GROUP
Landscape Architecture Land Planning
17 North 470 West American Fork, Utah 84003
801.756.5043 www.in-sitedesigngroup.com

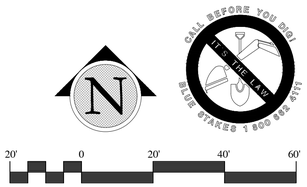

SCALE: 1"=20'-0" ON 24X36 SHEET

bhd ARCHITECTS
www.bhdarchitects.com
Phone 801.571.0010
Fax 801.571.0303
Toll Free 888.571.0010
65 East Wadsworth Park Drive
Suite 205 Draper, Utah 84020

LICENSED LANDSCAPE ARCHITECT # 4884514 Cory B. Whiting 8-15-2024 STATE OF UTAH

THE CHURCH OF JESUS CHRIST OF LATTER-DAY SAINTS

Springwater 9
Vineyard UT Springwater Stake
Approx. 542 South Geneva Road
Vineyard, Utah 84059

BHD #: 2346
County Parcel: 39-228-0001
Plan Series: G300-MH-11
Owner #: 502-2004
Date: 15 Aug 2024

Drawing Issue and Revision Schedule

#	Date	Description
1	15 Aug 2024	Bid Documents

IRRIGATION PLAN

LS202

Printed: 14 Aug 2024 5:27 PM

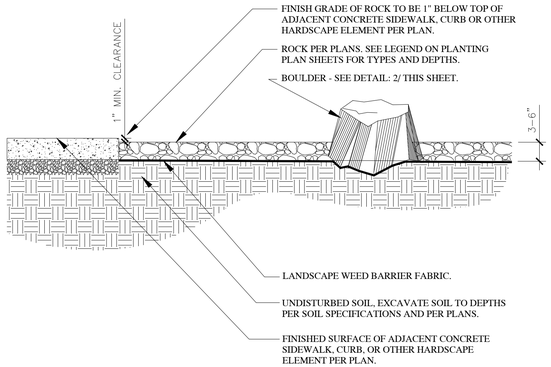

NOTES:
1. ROCK SHALL BE SCREENED & DOUBLE WASHED AND BE FREE OF DEBRIS PRIOR TO INSTALLATION. IF ROCK SUPPLIER DOES NOT HAVE A WASH PLANT, THE LANDSCAPE CONTRACTOR SHALL STILL BE RESPONSIBLE FOR DOUBLE WASHING ALL ROCK AND BOULDERS PRIOR TO INSTALLATION.
2. INSTALL PRE-EMERGENT HERBICIDE TO THE TOP OF THE FABRIC AFTER INSTALLING PLANTS AND PRIOR TO INSTALLING MULCH. AFTER INSTALLATION OF THE MULCH THE CONTRACTOR SHALL EVENLY BROADCAST A SECOND APPLICATION OF SLOW-RELEASE PRE-EMERGENT HERBICIDE. APPLY PRE-EMERGENT HERBICIDE PER MANUFACTURERS RECOMMENDATIONS.
3. KEEP TOP OF ROCK 1"-1½" BELOW ADJACENT WALKS AND CURBS. DO NOT ALLOW ROCK TO TOUCH THE TRUNK OF ANY PLANT. INSTALL ROCK AFTER INSTALLATION OF WEED BARRIER FABRIC AND PLANT MATERIAL.
4. CONTRACTOR TO ENSURE THAT TOP OF WEED BARRIER FABRIC IS FREE OF SOILS AND DEBRIS PRIOR TO PLACING ROCK.
5. SEE LANDSCAPE PLANS FOR ROCK TYPE AND DEPTH.

WEED FABRIC NOTE:
INSTALL 6" SOIL STAPLE IN WEED BARRIER FABRIC AT 5' O.C. TRIANGULAR SPACING. INSTALL 6" SOIL STAPLE AT 12" O.C. ALONG ALL WEED BARRIER FABRIC SEAMS. OVERLAP FABRIC MIN. OF 6" AT ALL SEAMS AS SHOWN BELOW. INSTALL SOIL STAPLE 6' O.C. ALONG EDGES & 2 AT EACH CORNER.

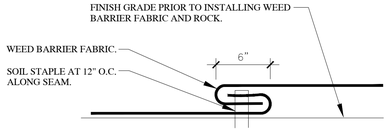

1 ROCK AND WEED BARRIER FABRIC WITH BOULDER
SCALE: NTS

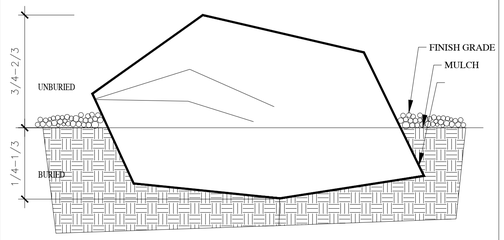

2 BOULDER PLACEMENT DETAIL
SCALE: NTS

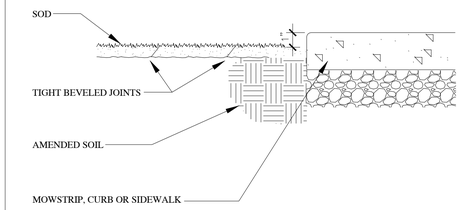

3 SOD INSTALLATION
SCALE: NTS

NOTES:
1. MOWSTRIP TO BE CAST-IN-PLACE AND POURED USING TYPICAL WEIGHT STRUCTURAL CONCRETE.
2. CONTRACTOR TO ENSURE POSITIVE DRAINAGE AROUND MOWSTRIPS-DO NOT CREATE A DAM EFFECT WITH PLACEMENT OF MOWSTRIP.
3. MAXIMUM 1/2" WIDTH VARIATION.
4. PRECISELY FOLLOW LAYOUT AS SHOWN ON MOWSTRIP/EDGING PLAN.

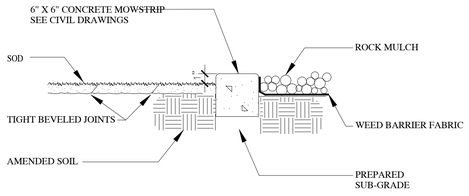

4 CONCRETE MOWSTRIP
SCALE: NTS

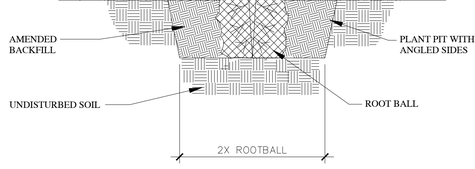

5 SHRUB PLANTING
SCALE: NTS

NOTE:
DO NOT USE ROCK MULCH IN LAWN AREAS.

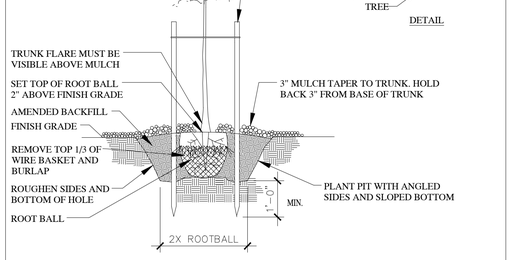

6 TREE PLANTING AND STAKING
SCALE: NTS

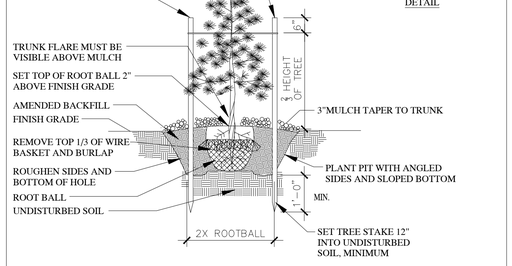

7 CONIFER PLANTING AND STAKING
SCALE: NTS

bhd ARCHITECTS
www.bhdarchitects.com
Phone 801.571.0010
Fax 801.571.0303
Toll Free 888.571.0010
65 East Wadsworth Park Drive
Suite 205 Draper, Utah 84020

LICENSED LANDSCAPE ARCHITECT # 4884514 Cory B. Whiting 8-15-2024 STATE OF UTAH

THE CHURCH OF JESUS CHRIST OF LATTER-DAY SAINTS

Springwater 9
Vineyard UT Springwater Stake

Approx. 542 South Geneva Road
Vineyard, Utah 84059

BHD #: 2346
Date: 15 Aug 2024
County Parcel: 39-228-0001
Plan Series: G300-MH-11
Owner #: 502-2004

Drawing Issue and Revision Schedule

#	Date	Description
1	15 Aug 2024	Bid Documents

LANDSCAPE DETAILS

LS301

In Site DESIGN GROUP
Landscape Architecture Land Planning
17 North 420 West American Fork, Utah 84003
801.756.5043 www.in-sitedesigngroup.com

Printed: 14 Aug 2024 5:27 PM

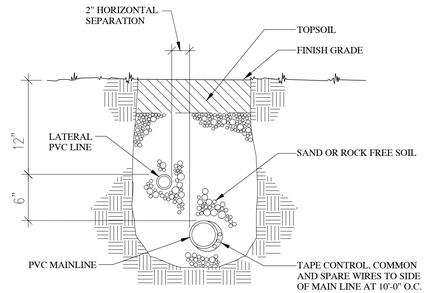

1 TRENCH SECTION - CONVENTIONAL WIRE SYS.

SCALE: NTS

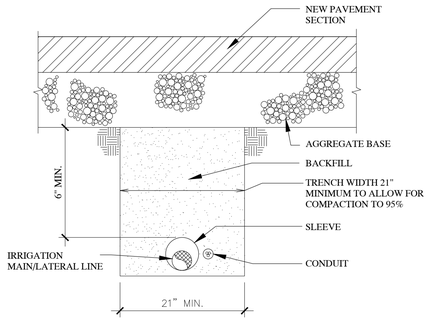

2 MISC. PIPE TRENCH: NEW PAVEMENT AREAS

SCALE: NTS

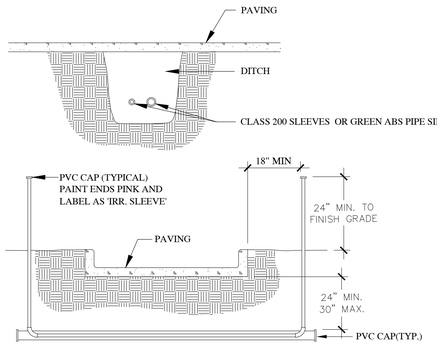

NOTE:
1. WHERE THERE IS MORE THAN ONE SLEEVE, EXTEND THE SMALLER SLEEVE TO 24-INCHES MINIMUM ABOVE FINISH GRADE.
2. ALL SLEEVES INSTALLED SHALL BE DUCT TAPED TO PREVENT DIRT OR OTHER DEBRIS ENTERING PIPE. ALL SLEEVES SHALL BE IDENTIFIED BY WOOD OR PVC STAKES AND BE SPRAY PAINTED WITH MARKING PAINT. REMOVE STAKES ONCE IRRIGATION SYSTEM IS COMPLETE.

3 SLEEVING

SCALE: NTS

NOTE:
INSTALL ISOLATION VALVE AFTER THE HYDROMETER AND BEFORE THE QUICK COUPLER. THE HYDROMETER IS TO BE DRAINED MANUALLY.

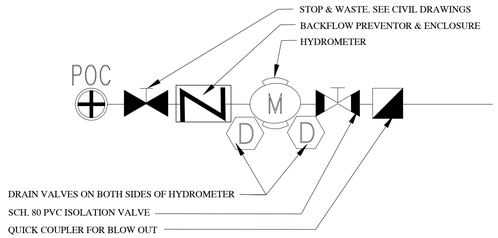

4 POC W/BACKFLOW SCHEMATIC LAYOUT

SCALE: NTS

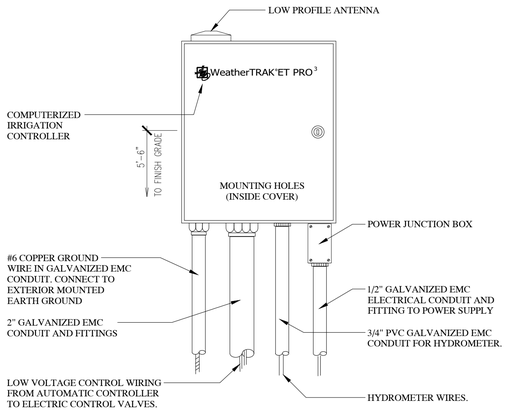

5 SMART CONTROLLER - WEATHER TRAK

SCALE: NTS

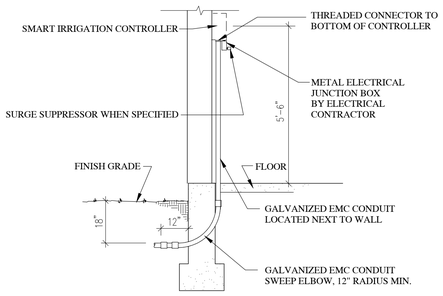

6 IRRIGATION CONTROLLER - INTERIOR MOUNT

SCALE: NTS

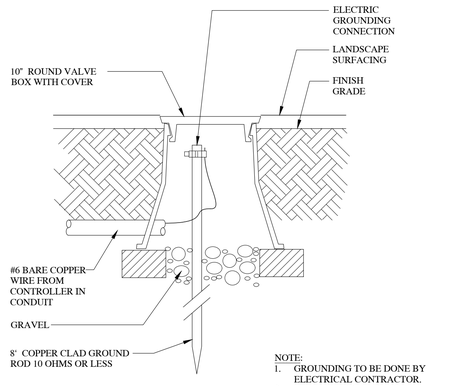

NOTE:
1. GROUNDING TO BE DONE BY ELECTRICAL CONTRACTOR.
2. SEE ELECTRICAL PLANS.

7 LIGHTNING GROUNDING ROD

SCALE: NTS

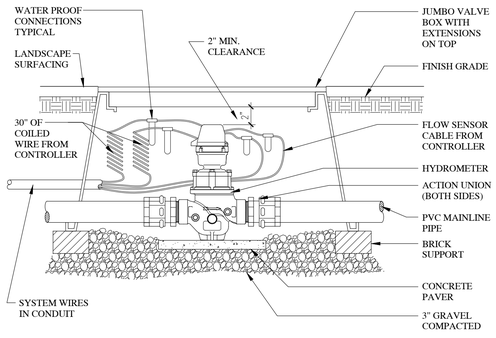

8 HYDROMETER

SCALE: NTS

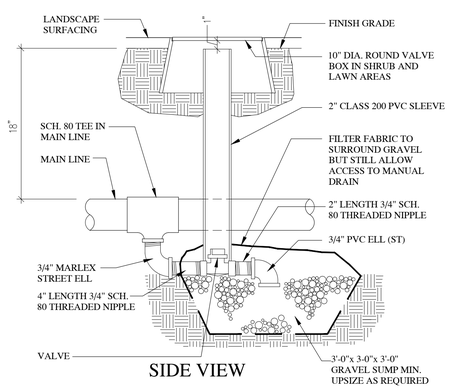

SIDE VIEW

NOTE:
- DRAIN INTO CENTER OF GRAVEL SUMP
- USE AT EVERY LOW SPOT ON MAINLINE

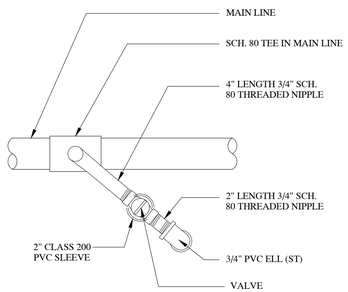

TOP VIEW

9 MAINLINE MANUAL DRAIN VALVE

SCALE: NTS

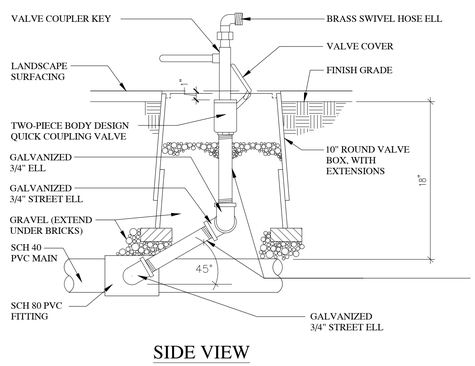

SIDE VIEW

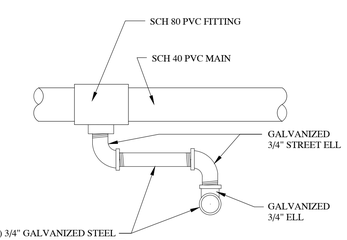

TOP VIEW

10 QUICK COUPLING VALVE

SCALE: NTS

bhd ARCHITECTS
www.bhdarchitects.com
Phone 801.571.0010
Fax 801.571.0303
Toll Free 888.571.0010
65 East Wadsworth Park Drive
Suite 205 Draper, Utah 84020

LICENSED LANDSCAPE ARCHITECT # 4884514 Cory B. Whiting 8-15-2024 STATE OF UTAH

THE CHURCH OF JESUS CHRIST OF LATTER-DAY SAINTS

Springwater 9
Vineyard UT Springwater Stake

Approx. 540 South Geneva Road
Vineyard, Utah 84059

BHD #: 2346
Date: 15 Aug 2024
County Parcel: 39:228:0001
Plan Series: G300-MH-11
Owner #: 502-2004

Drawing Issue and Revision Schedule

#	Date	Description
1	15 Aug 2024	Bid Documents

IRRIGATION DETAILS

LS401

In Site DESIGN GROUP
Landscape Architecture Land Planning
17 North 470 West American Fork, Utah 84003
801.756.5043 www.in-sitedesigngroup.com

Printed: 14 Aug 2024 5:27 P.M.

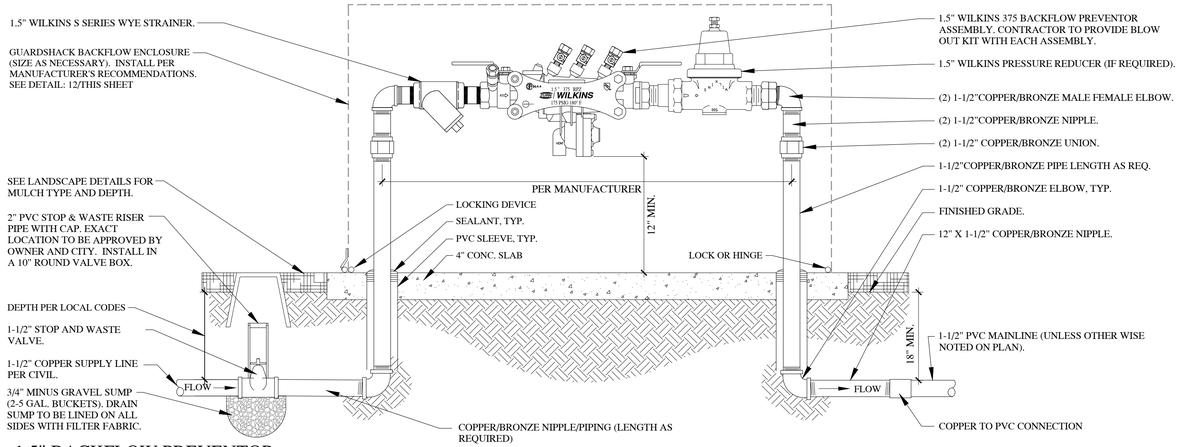

11 1.5" BACKFLOW PREVENTOR

SCALE: NTS

BACKFLOW PREVENTOR NOTES:

1. EQUIPMENT TO BE INSTALLED AT A MINIMUM OF 24" FROM ANY STRUCTURES OR HARDSCAPING.
2. WHEN UNIT IS NEXT TO STRUCTURE (i.e. WALL BUILDING, ETC.) MOUNT TEST COCKS ON SIDE AWAY FROM STRUCTURE.
3. PROVIDE OWNER WITH COMPLETE WRITTEN INSTRUCTIONS ON HOW TO DRAIN ENTIRE BACKFLOW UNIT TO PREVENT FREEZING. CONTRACTOR TO PROVIDE BLOW OUT KIT FROM MANUFACTURER.
4. CONTRACTOR SHALL PROVIDE ALL MATERIALS NECESSARY FOR PROPER RPZ INSTALLATION.
5. RPZ TO BE WINTERIZED AS NECESSARY TO PREVENT FREEZING. INSULATION IS REQUIRED TO PREVENT RPZ FROM FREEZING TEMPERATURES BEFORE SYSTEM IS BLOWN OUT FOR THE SEASON. CONTRACTOR SHALL INSTALL INSULATION BLANKET FOR RPZ.
6. WHERE CORROSION IS POSSIBLE, USE A DIELECTRIC UNION WHEREVER A COPPER-BASED METAL (COPPER, BRASS, BRONZE) IS JOINED TO AN IRON-BASED METAL (IRON, GALVANIZED STEEL, STAINLESS STEEL).
7. CONTRACTOR SHALL TEST WATER SUPPLY TO ENSURE THERE IS AT LEAST 90 PSI AND 23 GPM AVAILABLE AT THE POC PRIOR TO BEGINNING WORK ON THE SYSTEM.
8. PROVIDE DEDUCTIVE BID ALTERNATE TO REDUCE BACKFLOW, PRESSURE REDUCER AND Y STRAINER 1" VS. 1-1/2" WITH ASSOCIATED REDUCER FITTINGS.

NOTES:
1. VALVE BOX TO REST ON (4) CMU BLOCKS (ONE FOR EACH SIDE).
2. CLUSTERED VALVE BOXES MAY SHARE A CMU BLOCK.

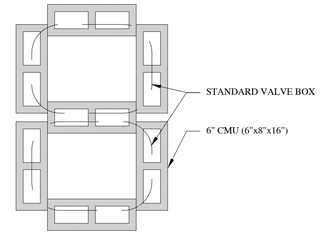

12 CMU PLACEMENT

SCALE: NTS

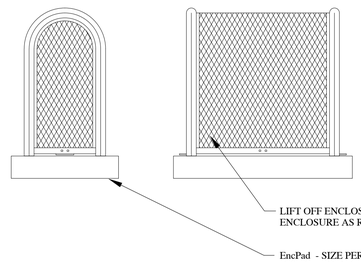

GUARDSHACK GENERAL SPECIFICATIONS

1. ALL PIPE SHALL BE 1 ¼" SCHEDULE 40 A.S.T.M. A-53 GRADE A- ELECTRIC WELD PIPE.
2. ANGLE IRON SHALL BE 1" X 1" X ⅛" STEEL.
3. EXPANDED METAL SHALL BE ½" SPACING X # 13 GA. FLATTENED DIAMOND PATTERN STEEL.
4. THERE SHALL BE NO EXPOSED ENDS OF EXPANDED METAL ON THE OUTSIDE OF THE ENCLOSURE.
5. WELDING SHALL BE A MINIMUM OF ¼" LONG WELDS ON 4" SPACING.
6. STANDARD MOUNTING BRACKETS SHALL BE WELDED ON EACH END OF LIFT OFF ENCLOSURES.
7. ONE BRACKET ON HINGED UNITS SHALL BE WELDED ON END OPPOSITE HINGES.
8. HARDWARE KITS PROVIDED FOR MOUNTING ENCLOSURES.
9. ALL HARDWARE SHALL BE SECURELY ATTACHED TO ENCLOSURES.
10. ALL ENCLOSURES SHALL WITHSTAND A MINIMUM OF 200 LBS. PER SQUARE FOOT WITHOUT ANY PERMANENT DEFLECTION OR DISTORTION.
11. 3/8" SPACING BETWEEN ANGLE IRON FRAMEWORK OF ENCLOSURE AND SLAB TO PREVENT RUSTING. ONLY PIPE ENDS TO TOUCH SLAB.

POWDER COATED UNITS

PRE-POWDERCOAT TREATMENT PROCESS
CLEAN GUARDSHACK UNIT WITH A S-44 ALKALINE CLEANER, OVERFLOW RINSE, APPLY AN AC-8115 IRON PHOSPHATE TREATMENT, OVERFLOW RINSE AND FINISH WITH A #198 SEALER RINSE TO PREVENT RUSTING AND IMPROVE ADHESION.

POWDER COAT TREATMENT PROCESS
UNITS SHALL BE PREHEATED AND COATED BY ELECTROSTATIC APPLICATION OF 2.0 TO 3.5 MIL THICKNESS ON ALL SURFACES. POWDER SHALL BE RAL 1019 WOODLANDS TAN OR TCI 8810-6058 FOREST GREEN OR APPROVED EQUAL IMPACT RESISTANCE FINISH 160 INCH POUNDS DIRECT 160 INCH POUNDS REVERSE, PER ASTM D-2794 SPECS. GLOSS FINISH >85, PER ASTM D-523. ADHESION TO BE RATED EXCELLENT WHEN TESTED TO ASTM D-3359 STANDARDS.

NOTE:
1. ENCLOSURE IS AVAILABLE THROUGH:
   BPDI-GUARDSHACK ENCLOSURES
   3831 E. GROVE STREET
   PHOENIX, ARIZONA 85040
   (602) 426-1002
2. CONTRACTOR TO PROVIDE A LOCK TO OWNER UPON INSTALLATION.
3. REFERENCE RPZ DETAIL FOR BACKFLOW INSTALLATION.
4. UPSIZE ENCLOSURE IF NECESSARY.
5. OWNER TO DETERMINE POWDER COAT COLOR PRIOR TO ORDERING UNIT.

13 STANDARD GUARD SHACK ENCLOSURE

SCALE: NTS

NOTES:
1. LIMIT 1 VALVE PER BOX.
2. 10" MIN. LATERAL LINE DEPTH AT VALVE BOX, 12" MIN. LATERAL LINE DEPTH EVERYWHERE ELSE.
3. PROVIDE MIN. 2" CLEARANCE BETWEEN WIRE AND CMU BLOCK.

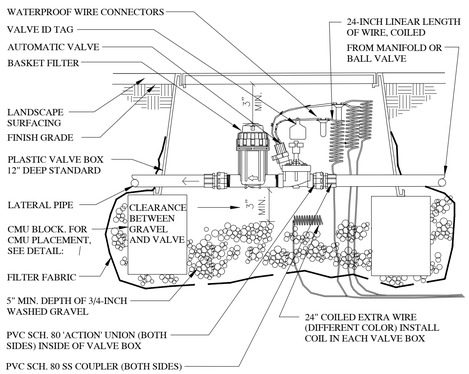

14 DRIP VALVE SECTION - CONVENTIONAL WIRE

SCALE: NTS

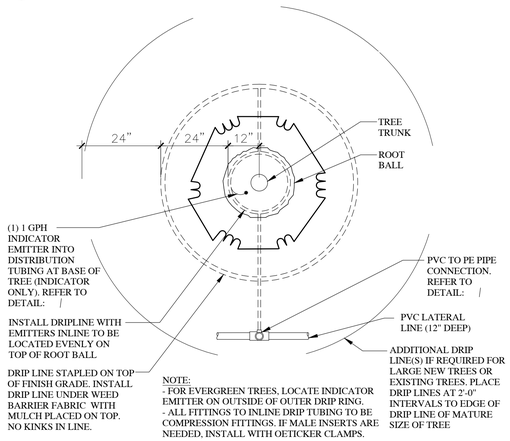

NOTE:
- FOR EVERGREEN TREES, LOCATE INDICATOR EMITTER ON OUTSIDE OF OUTER DRIP RING.
- ALL FITTINGS TO INLINE DRIP TUBING TO BE COMPRESSION FITTINGS. IF MALE INSERTS ARE NEEDED, INSTALL WITH OETICKER CLAMPS.

15 TREE DRIP - PLAN VIEW (PLANTER AREAS)

SCALE: NTS

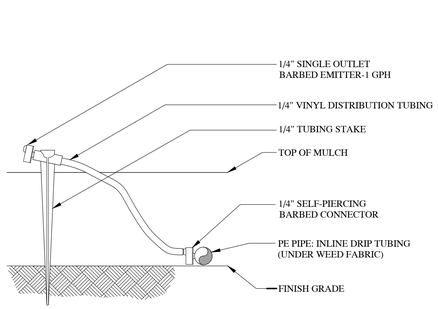

NOTE:
1. CONNECT EMITTER DIRECTLY INTO IN-LINE DRIP TUBING.
2. THIS IS AN INDICATOR ONLY EMITTER TO BE USED AT EACH TREE RING AND AREA WHERE IN-LINE TUBING IS INSTALLED.
3. 1/4" TUBING LENGTH: MINIMUM 14", MAXIMUM 24".
4. REFER TO DETAIL 15 ON THIS SHEET.

16 INDICATOR EMITTER

SCALE: NTS

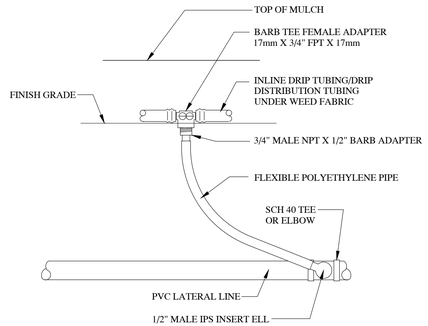

NOTES:
1. USE AT TREE RINGS ONLY.
2. LIMIT 1 VALVE PER BOX.
3. 10" MIN. LATERAL LINE DEPTH AT VALVE BOX, 12" MIN. LATERAL LINE DEPTH EVERYWHERE ELSE.
4. PROVIDE MIN. 2" CLEARANCE BETWEEN CONDUIT AND CMU BLOCK.

17 PVC TO BE PIPE CONNECTION

SCALE: NTS

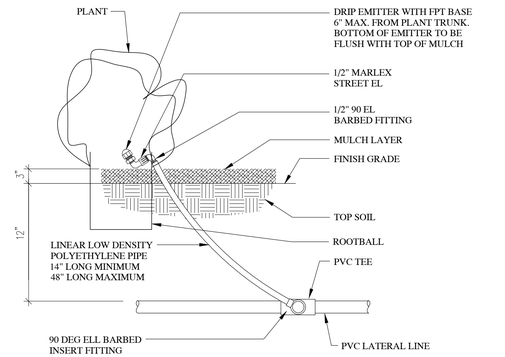

NOTE: LOCATE EMITTER ON BLDG OR FENCE SIDE OF PLANT.

18 DRIP EMITTER INSTALLATION

SCALE: NTS

bhd ARCHITECTS
www.bhdarchitects.com
Phone 801.571.0010
Fax 801.571.0303
Toll Free 888.571.0010
65 East Wadsworth Park Drive
Suite 205 Draper, Utah 84020

LICENSED LANDSCAPE ARCHITECT # 4884514 Cory B. Whiting 8-15-2024 STATE OF UTAH

THE CHURCH OF JESUS CHRIST OF LATTER-DAY SAINTS

Springwater 9
Vineyard UT Springwater Stake
Approx. 540 South Geneva Road
Vineyard, Utah 84059

BHD #: 2346
Date: 15 Aug 2024
County Parcel: 39:228:0001
Plan Series: G300-MH-11
Owner #: 502-2004

Drawing Issue and Revision Schedule

#	Date	Description
1	15 Aug 2024	Bid Documents

IRRIGATION DETAILS

LS402

In Site DESIGN GROUP
Landscape Architecture Land Planning
17 North 470 West American Fork, Utah 84003
801.756.5043 www.in-sitedesigngroup.com

Printed: 14 Aug 2024 5:27 PM

NOTES:
1. LIMIT 1 VALVE PER BOX.
2. 10" MIN. LATERAL LINE DEPTH AT VALVE BOX, 12" MIN. LATERAL LINE DEPTH EVERYWHERE ELSE.
3. PROVIDE MIN. 2" CLEARANCE BETWEEN WIRE AND CMU BLOCK.
4. FOR MANIFOLD AND VALVE ASSEMBLY, SEE DETAIL:

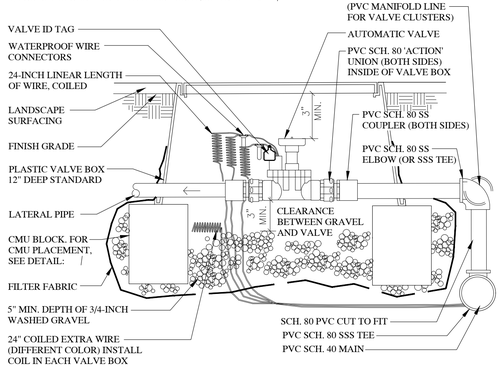

19 AUTOMATIC VALVE - CONVENTIONAL WIRE
SCALE: NTS

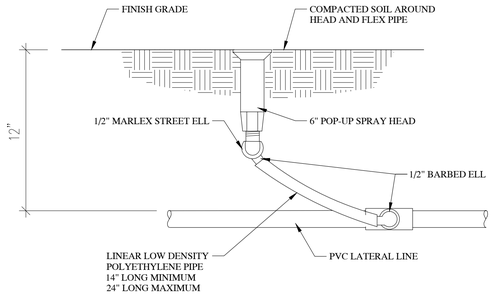

20 SPRAY AND ROTARY HEAD ASSEMBLY
SCALE: NTS

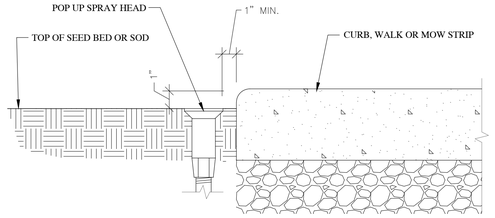

21 SPRAY HEAD OR ROTOR NEXT TO CURB / WALK
SCALE: NTS

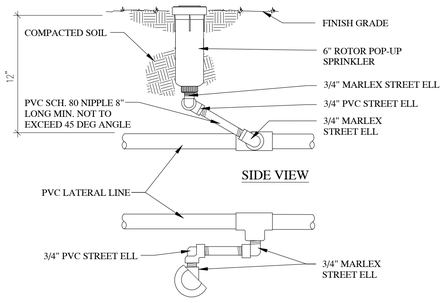

22 ROTOR POP-UP HEAD
SCALE: NTS

In Site DESIGN GROUP
Landscape Architecture Land Planning
17 North 470 West American Fork, Utah 84003
801.756.5043 www.in-sitedesigngroup.com

bhd ARCHITECTS
www.bhdarchitects.com
Phone 801.571.0010
Fax 801.571.0303
Toll Free 888.571.0010
65 East Wadsworth Park Drive
Suite 205 Draper, Utah 84020

LICENSED LANDSCAPE ARCHITECT
4884514
Cory B. Whiting
8-15-2024
STATE OF UTAH

THE CHURCH OF JESUS CHRIST OF LATTER-DAY SAINTS

Springwater 9
Vineyard UT Springwater Stake

Approx. 542 South Geneva Road
Vineyard, Utah 84059

Date: 15 Aug 2024
BHD #: 2346
County Parcel: 39:228:0001
Plan Series: G300-MH-11
Owner #: 502-2004

Drawing Issue and Revision Schedule

#	Date	Description
1	15 Aug 2024	Bid Documents

IRRIGATION DETAILS

LS403

Printed: 14 Aug 2024 5:27 PM

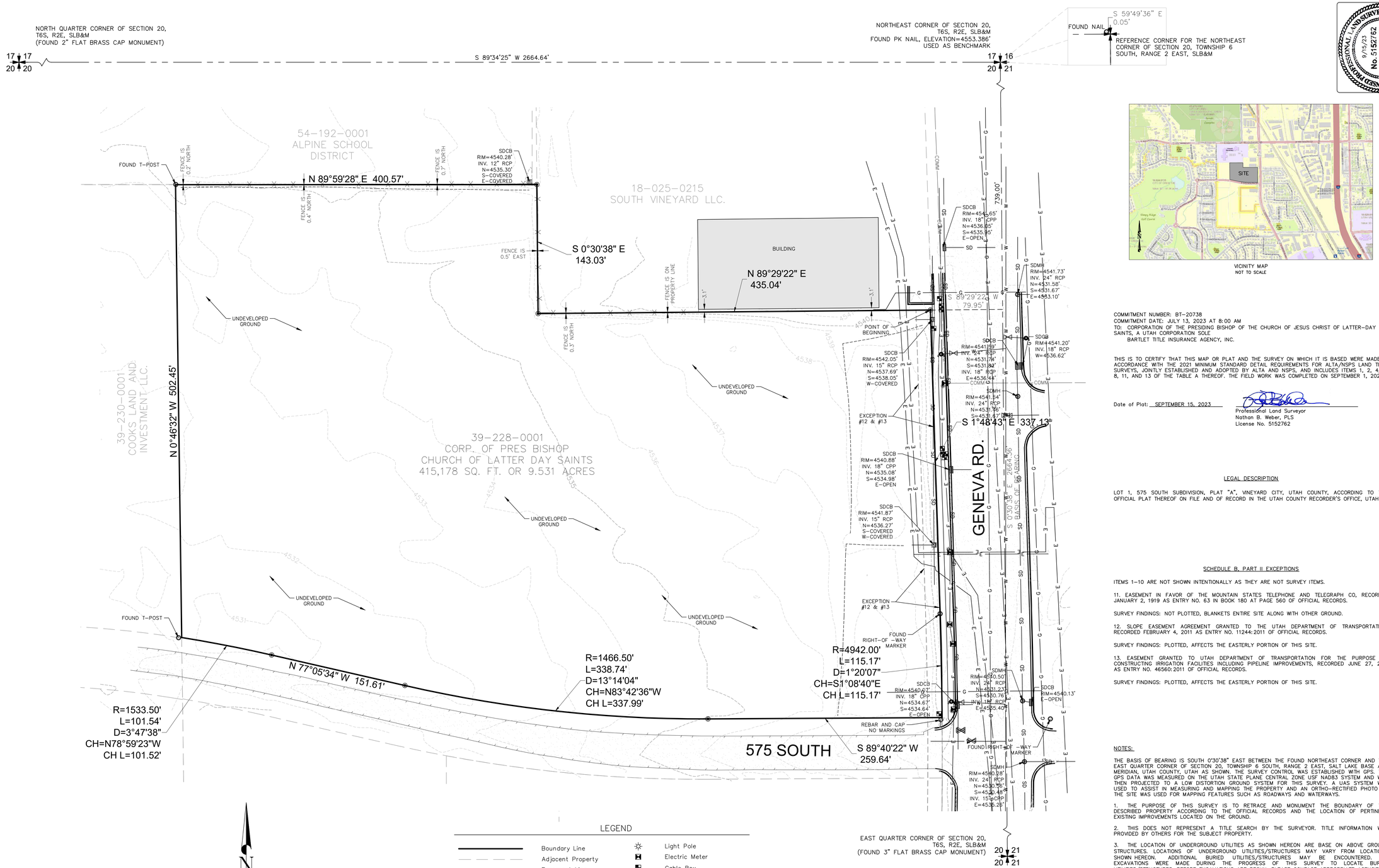

VICINITY MAP
NOT TO SCALE

COMMITMENT NUMBER: BT-20738
COMMITMENT DATE: JULY 13, 2023 AT 8:00 AM
TO: CORPORATION OF THE PRESIDING BISHOP OF THE CHURCH OF JESUS CHRIST OF LATTER-DAY SAINTS, A UTAH CORPORATION SOLE
BARTLET TITLE INSURANCE AGENCY, INC.

THIS IS TO CERTIFY THAT THIS MAP OR PLAT AND THE SURVEY ON WHICH IT IS BASED WERE MADE IN ACCORDANCE WITH THE 2021 MINIMUM STANDARD DETAIL REQUIREMENTS FOR ALTA/NSPS LAND TITLE SURVEYS, JOINTLY ESTABLISHED AND ADOPTED BY ALTA AND NSPS, AND INCLUDES ITEMS 1, 2, 4, 5, 8, 11, AND 13 OF THE TABLE A THEREOF. THE FIELD WORK WAS COMPLETED ON SEPTEMBER 1, 2023.

Date of Plat: SEPTEMBER 15, 2023

Professional Land Surveyor
Nathan B. Weber, PLS
License No. 5152762

LEGAL DESCRIPTION

LOT 1, 575 SOUTH SUBDIVISION, PLAT "A", VINEYARD CITY, UTAH COUNTY, ACCORDING TO THE OFFICIAL PLAT THEREOF ON FILE AND OF RECORD IN THE UTAH COUNTY RECORDER'S OFFICE, UTAH.

SCHEDULE B, PART II EXCEPTIONS

ITEMS 1-10 ARE NOT SHOWN INTENTIONALLY AS THEY ARE NOT SURVEY ITEMS.

11. EASEMENT IN FAVOR OF THE MOUNTAIN STATES TELEPHONE AND TELEGRAPH CO, RECORDED JANUARY 2, 1919 AS ENTRY NO. 63 IN BOOK 180 AT PAGE 560 OF OFFICIAL RECORDS.

SURVEY FINDINGS: NOT PLOTTED, BLANKETS ENTIRE SITE ALONG WITH OTHER GROUND.

12. SLOPE EASEMENT AGREEMENT GRANTED TO THE UTAH DEPARTMENT OF TRANSPORTATION, RECORDED FEBRUARY 4, 2011 AS ENTRY NO. 11244:2011 OF OFFICIAL RECORDS.

SURVEY FINDINGS: PLOTTED, AFFECTS THE EASTERLY PORTION OF THIS SITE.

13. EASEMENT GRANTED TO UTAH DEPARTMENT OF TRANSPORTATION FOR THE PURPOSE OF CONSTRUCTING IRRIGATION FACILITIES INCLUDING PIPELINE IMPROVEMENTS, RECORDED JUNE 27, 2011 AS ENTRY NO. 46560:2011 OF OFFICIAL RECORDS.

SURVEY FINDINGS: PLOTTED, AFFECTS THE EASTERLY PORTION OF THIS SITE.

NOTES:

THE BASIS OF BEARING IS SOUTH 0°30'38" EAST BETWEEN THE FOUND NORTHEAST CORNER AND THE EAST QUARTER CORNER OF SECTION 20, TOWNSHIP 6 SOUTH, RANGE 2 EAST, SALT LAKE BASE AND MERIDIAN, UTAH COUNTY, UTAH AS SHOWN. THE SURVEY CONTROL WAS ESTABLISHED WITH GPS. THE GPS DATA WAS MEASURED ON THE UTAH STATE PLANE CENTRAL ZONE USF NAD83 SYSTEM AND WAS THEN PROJECTED TO A LOW DISTORTION GROUND SYSTEM FOR THIS SURVEY. A UAS SYSTEM WAS USED TO ASSIST IN MEASURING AND MAPPING THE PROPERTY AND AN ORTHO-RECTIFIED PHOTO OF THE SITE WAS USED FOR MAPPING FEATURES SUCH AS ROADWAYS AND WATERWAYS.

1. THE PURPOSE OF THIS SURVEY IS TO RETRACE AND MONUMENT THE BOUNDARY OF THE DESCRIBED PROPERTY ACCORDING TO THE OFFICIAL RECORDS AND THE LOCATION OF PERTINENT EXISTING IMPROVEMENTS LOCATED ON THE GROUND.

2. THIS DOES NOT REPRESENT A TITLE SEARCH BY THE SURVEYOR. TITLE INFORMATION WAS PROVIDED BY OTHERS FOR THE SUBJECT PROPERTY.

3. THE LOCATION OF UNDERGROUND UTILITIES AS SHOWN HEREON ARE BASE ON ABOVE GROUND STRUCTURES. LOCATIONS OF UNDERGROUND UTILITIES/STRUCTURES MAY VARY FROM LOCATIONS SHOWN HEREON. ADDITIONAL BURIED UTILITIES/STRUCTURES MAY BE ENCOUNTERED. NO EXCAVATIONS WERE MADE DURING THE PROGRESS OF THIS SURVEY TO LOCATE BURIED UTILITIES/STRUCTURES. BEFORE EXCAVATIONS ARE BEGUN, PLEASE CONTACT APPROPRIATE AGENCIES.

4. THE PURPORTED ADDRESS FOR THIS SITE IS 750 EAST 575 SOUTH, VINEYARD, UTAH 84057 BASED ON DOCUMENTATION PROVIDED AT THE TIME OF THE SURVEY.

DIAMOND LAND SURVEYING
6891 South 700 West Ste. 150
Midvale, Utah 84047
Phone (801) 266-5099 Fax (801) 266-5032
office@diamondlandsurveying.com
www.diamondlandsurveying.com
Boundary Surveys
Topography Surveys
Subdivisions
Construction Staking
A.L.T.A. & A.C.S.M. Surveys

LOCATED IN THE NORTHEAST QUARTER OF SECTION 20, TOWNSHIP 6 SOUTH, RANGE 2 EAST, SALT LAKE BASE AND MERIDIAN

bhd ARCHITECTS
www.bhdarchitects.com
Phone 801.571.0010
Fax 801.571.0303
Toll Free 888.571.0010
65 East Wadsworth Park Drive
Suite 205 Draper, Utah 84020

THE CHURCH OF JESUS CHRIST OF LATTER-DAY SAINTS

Springwater 9
Vineyard UT Springwater Stake
Approx. 540 South Geneva Road
Vineyard, Utah 84059

Owner #: 502-2004
Plan Series: G300-MH-11
County Parcel: 39-228:0001
BHD #: 2346
Date: 15 Aug 2024

Drawing issue and Revision Schedule

#	Date	Description
1	15 Aug 2024	Bid Documents

Site Survey

C101

Printed: 12 Aug 2024 12:39 PM

ALTA Commitment for Title Insurance

Issued By Old Republic National Title Insurance Company

NOTICE

IMPORTANT—READ CAREFULLY: THIS COMMITMENT IS AN OFFER TO ISSUE ONE OR MORE TITLE INSURANCE POLICIES. ALL CLAIMS OR REMEDIES SOUGHT AGAINST THE COMPANY INVOLVING THE CONTENT OF THIS COMMITMENT OR THE POLICY MUST BE BASED SOLELY IN CONTRACT.

THIS COMMITMENT IS NOT AN ABSTRACT OF TITLE, REPORT OF THE CONDITION OF TITLE, LEGAL OPINION, OPINION OF TITLE, OR OTHER REPRESENTATION OF THE STATUS OF TITLE. THE PROCEDURES USED BY THE COMPANY TO DETERMINE INSURABILITY OF THE TITLE, INCLUDING ANY SEARCH AND EXAMINATION, ARE PROPRIETARY TO THE COMPANY, WERE PERFORMED SOLELY FOR THE BENEFIT OF THE COMPANY, AND CREATE NO EXTRACONTRACTUAL LIABILITY TO ANY PERSON, INCLUDING A PROPOSED INSURED.

THE COMPANY'S OBLIGATION UNDER THIS COMMITMENT IS TO ISSUE A POLICY TO A PROPOSED INSURED IDENTIFIED IN SCHEDULE A IN ACCORDANCE WITH THE TERMS AND PROVISIONS OF THIS COMMITMENT. THE COMPANY HAS NO LIABILITY OR OBLIGATION INVOLVING THE CONTENT OF THIS COMMITMENT TO ANY OTHER PERSON.

COMMITMENT TO ISSUE POLICY

Subject to the Notice; Schedule B, Part I—Requirements; Schedule B, Part II—Exceptions; and the Commitment Conditions, Old Republic National Title Insurance Company, a Florida Corporation (the "Company"), commits to issue the Policy according to the terms and provisions of this Commitment. This Commitment is effective as of the Commitment Date shown in Schedule A for each Policy described in Schedule A, only when the Company has entered in Schedule A both the specified dollar amount as the Proposed Policy Amount and the name of the Proposed Insured.

If all of the Schedule B, Part I—Requirements have not been met within 6 months after the Commitment Date, this Commitment terminates and the Company's liability and obligation end.

Issued through the Office of

BARTLETT
title insurance agency
1993 North State Street
Provo, Utah 84604
tel 801/377-1181

Authorized Signatory

OLD REPUBLIC NATIONAL TITLE INSURANCE COMPANY
A Stock Company
400 Second Avenue South, Minneapolis, Minnesota 55401
(612) 371-1111

By _____ *President*

Attest _____ *Secretary*

ORT Form 4690 6/06 Rev. 8-1-16
ALTA Commitment for Title Insurance

COMMITMENT CONDITIONS

1. DEFINITIONS

(a) "Knowledge" or "Known": Actual or imputed knowledge, but not constructive notice imparted by the Public Records.
(b) "Land": The land described in Schedule A and affixed improvements that by law constitute real property. The term "Land" does not include any property beyond the lines of the area described in Schedule A, nor any right, title, interest, estate, or easement in abutting streets, roads, avenues, alleys, lanes, ways, or waterways, but this does not modify or limit the extent that a right of access to and from the Land is to be insured by the Policy.
(c) "Mortgage": A mortgage, deed of trust, or other security instrument, including one evidenced by electronic means authorized by law.
(d) "Policy": Each contract of title insurance, in a form adopted by the American Land Title Association, issued or to be issued by the Company pursuant to this Commitment.
(e) "Proposed Insured": Each person identified in Schedule A as the Proposed Insured of each Policy to be issued pursuant to this Commitment.
(f) "Proposed Policy Amount": Each dollar amount specified in Schedule A as the Proposed Policy Amount of each Policy to be issued pursuant to this Commitment.
(g) "Public Records": Records established under state statutes at the Commitment Date for the purpose of imparting constructive notice of matters relating to real property to purchasers for value and without Knowledge.
(h) "Title": The estate or interest described in Schedule A.

2. If all of the Schedule B, Part I—Requirements have not been met within the time period specified in the Commitment to Issue Policy, this Commitment terminates and the Company's liability and obligation end.

3. The Company's liability and obligation is limited by and this Commitment is not valid without:
(a) the Notice;
(b) the Commitment to Issue Policy;
(c) the Commitment Conditions;
(d) Schedule A;
(e) Schedule B, Part I—Requirements;
(f) Schedule B, Part II—Exceptions; and
(g) a counter-signature by the Company or its issuing agent that may be in electronic form.

4. COMPANY'S RIGHT TO AMEND

The Company may amend this Commitment at any time. If the Company amends this Commitment to add a defect, lien, encumbrance, adverse claim, or other matter recorded in the Public Records prior to the Commitment Date, any liability of the Company is limited by Commitment Condition 5. The Company shall not be liable for any other amendment to this Commitment.

5. LIMITATIONS OF LIABILITY

(a) The Company's liability under Commitment Condition 4 is limited to the Proposed Insured's actual expense incurred in the interval between the Company's delivery to the Proposed Insured of the Commitment and the delivery of the amended Commitment, resulting from the Proposed Insured's good faith reliance to:
  (i) comply with the Schedule B, Part I—Requirements;
  (ii) eliminate, with the Company's written consent, any Schedule B, Part II—Exceptions; or
  (iii) acquire the Title or create the Mortgage covered by this Commitment.
(b) The Company shall not be liable under Commitment Condition 5(a) if the Proposed Insured requested the amendment or had Knowledge of the matter and did not notify the Company about it in writing.
(c) The Company will only have liability under Commitment Condition 4 if the Proposed Insured would not have incurred the expense had the Commitment included the added matter when the Commitment was first delivered to the Proposed Insured.
(d) The Company's liability shall not exceed the lesser of the Proposed Insured's actual expense incurred in good faith and described in Commitment Conditions 5(a)(i) through 5(a)(iii) or the Proposed Policy Amount.
(e) The Company shall not be liable for the content of the Transaction Identification Data, if any.
(f) In no event shall the Company be obligated to issue the Policy referred to in this Commitment unless all of the Schedule B, Part I—Requirements have been met to the satisfaction of the Company.
(g) In any event, the Company's liability is limited by the terms and provisions of the Policy.

6. LIABILITY OF THE COMPANY MUST BE BASED ON THIS COMMITMENT

(a) Only a Proposed Insured identified in Schedule A, and no other person, may make a claim under this Commitment.
(b) Any claim must be based in contract and must be restricted solely to the terms and provisions of this Commitment.
(c) Until the Policy is issued, this Commitment, as last revised, is the exclusive and entire agreement between the parties with respect to the subject matter of this Commitment and supersedes all prior commitment negotiations, representations, and proposals of any kind, whether written or oral, express or implied, relating to the subject matter of this Commitment.
(d) The deletion or modification of any Schedule B, Part II—Exception does not constitute an agreement or obligation to provide coverage beyond the terms and provisions of this Commitment or the Policy.
(e) Any amendment or endorsement to this Commitment must be in writing and authenticated by a person authorized by the Company.
(f) When the Policy is issued, all liability and obligation under this Commitment will end and the Company's only liability will be under the Policy.

7. IF THIS COMMITMENT HAS BEEN ISSUED BY AN ISSUING AGENT

The issuing agent is the Company's agent only for the limited purpose of issuing title insurance commitments and policies. The issuing agent is not the Company's agent for the purpose of providing closing or settlement services.

8. PRO-FORMA POLICY

The Company may provide, at the request of a Proposed Insured, a pro-forma policy illustrating the coverage that the Company may provide. A pro-forma policy neither reflects the status of Title at the time that the pro-forma policy is delivered to a Proposed Insured, nor is it a commitment to insure.

9. ARBITRATION

The Policy contains an arbitration clause. All arbitrable matters when the Proposed Policy Amount is $2,000,000 or less shall be arbitrated at the option of either the Company or the Proposed Insured as the exclusive remedy of the parties. A Proposed Insured may review a copy of the arbitration rules at http://www.alta.org/arbitration.

Bartlett Title Insurance Agency, Inc.
1993 North State, Provo, Utah 84604
(801) 377-1181
Bruce I. Bartlett, President

TITLE COMMITMENT
SCHEDULE A

1.	**Commitment Number:**	BT-20738 - 1st amended	Prop ID 590-1876
2.	**Effective Date:**	02/03/2025 @ 8:00 a.m.	
3.	Policy(ies) to be Issued:	Amount of Insurance:	Premium Amount:

(a) ALTA Owner's Policy (6/17/06)

b) **ALTA Loan Policy (6/17/06)**

Endorsements:

4. The estate or interest in the Land described or referred to in this Commitment is:

Fee Simple

5. Title to the estate or interest in the Land is at the Effective Date vested in:

Corporation of the Presiding Bishop of the Church of Jesus Christ of Latter-day Saints, a Utah corporation sole

6. The Land referred to in this Commitment is located in **Utah** County, State of **Utah** and is described as follows:

See Exhibit "A" attached hereto and by this reference made a part hereof.

Property Known As: 750 East 575 South
Vineyard, UT 84057



Authorized Countersignature
Bartlett Title Insurance Agency, Inc.

Exhibit "A"

Property Description

The land referred to is located in **Utah** County, State of **Utah**, and is described as follows:

Lot 1, 575 SOUTH SUBDIVISION, Plat "A", Vineyard City, Utah County, according to the official plat thereof on file and of record in the Utah County Recorder's Office, Utah.

(39:228:0001)

SCHEDULE B - SECTION I
REQUIREMENTS

The following are the requirements to be complied with and completed to the satisfaction of the Company before its policy of title insurance will be issued:

(A) Show that restrictions or restrictive covenants have not been violated.

(B) Pay the agreed amounts for the estate or interest in the land and/or the mortgage to be insured.

(C) Pay us the premiums, fees and charges for the policy. (Pursuant to State of Utah Insurance Department Rule R590-153-5A, a cancellation fee of $200.00 will be due if the transaction for which this commitment is furnished cancels.)

(D) Documents satisfactory to us creating the interest in the land and/or the mortgage to be insured must be properly authorized, executed, delivered and recorded in the Public Records.

(E) You must tell us in writing the name of anyone not referred to in this Commitment who will get an interest in the land or who will make a loan on this land. We may then make additional requirements or exceptions.

NOTICE TO APPLICANT: The land covered herein may be serviced by cities, improvement districts, or utility companies that provided municipal type service for water, sewer, electricity, or other services that do not result in a lien, but for which service may be terminated in the event of non-payment of service charges to date or transfer fees. Although the Company assumes no liability therefore, you are urged to make investigation into such matters.

NOTE: If the applicant desires copies of the documents underlying any exception to coverage shown herein, the Company will furnish the same on request, if available, either with or without charge as appears appropriate.

NOTE: This Commitment is subject to such further matters that may appear of record at the time we are asked to record a Deed of Trust or any other documents.

NOTE: ANY MATTER IN DISPUTE BETWEEN YOU AND THE COMPANY MAY BE SUBJECT TO ARBITRATION AS AN ALTERNATIVE TO COURT ACTION PURSUANT TO THE RULES OF THE AMERICAN ARBITRATION ASSOCIATION OR OTHER RECOGNIZED ARBITRATOR, A COPY OF WHICH IS AVAILABLE ON REQUEST FROM THE COMPANY. ANY DECISION REACHED BY ARBITRATION SHALL BE BINDING UPON BOTH YOU AND THE COMPANY. THE ARBITRATION AWARD MAY INCLUDE ATTORNEY'S FEES IF ALLOWED BY STATE LAW AND MAY BE ENTERED AS A JUDGMENT IN ANY COURT OF PROPER JURISDICTION.

(F) Other:

1. To be determined.

SCHEDULE B - SECTION II
EXCEPTIONS

THIS COMMITMENT DOES NOT REPUBLISH ANY COVENANT, CONDITION, RESTRICTION, OR LIMITATION CONTAINED IN ANY DOCUMENT REFERRED TO IN THIS COMMITMENT TO THE EXTENT THAT THE SPECIFIC COVENANT, CONDITION, RESTRICTION, OR LIMITATION VIOLATES STATE OF FEDERAL LAW BASED ON RACE, COLOR, RELIGION, SEX, SEXUAL ORIENTATION, GENDER IDENTITY, HANDICAP, FAMILIAL STATUS, OR NATIONAL ORIGIN.

Schedule B of the policy or policies to be issued will not insure against loss or damage resulting from the terms and provisions of any lease or easement identified in Schedule A, will contain exceptions to the following matters unless the same are disposed of to the satisfaction of the company:

1. The lien of real estate taxes or assessments imposed on the title by a governmental authority that are not shown as existing liens by the records of any taxing authority that levies taxes or assessments on real property or in the public records.

2. Any facts, rights, interest or claims which are not shown in the public records, but that could be ascertained by an inspection of the land or by making inquiry of persons in possession of the land.

3. Easements, claims of easements or encumbrances which are not shown by the public records

4. Any encroachment, encumbrance, violation, variation or adverse circumstance affecting the title including discrepancies, conflicts in boundary lines, shortage in area, or any other facts which would be disclosed by and accurate and complete land survey of the land, and that are not shown in the public records.

5. Unpatented mining claims; reservations or exceptions in patents or in acts authorizing the issuance thereof; Indian treaty or aboriginal rights including, but not limited to, easements or equitable servitude; water rights, claims or title to water; and any service, installation, connection, maintenance, or construction charges for sewer, water, electricity or garbage.

6. Any lien, or right to a lien, for services, labor or material theretofore or hereafter furnished, imposed by law and not shown in the public records.

7. Defects, liens, encumbrances, adverse claims or other matters, if any, created, first appearing in the public records or attaching subsequent to the effective date hereof but prior to the date the proposed insured acquires of record for value the estate or interest or mortgage thereon covered by this Commitment.

(Note: Exceptions 1 - 7 will be omitted on Lender's Policy.)

8. General property taxes for the year 2025 and subsequent years. Taxes for the year 2024 are paid in the amount of $47.75. Tax Serial No. 39:228:0001.

9. This property lies within the boundaries of Vineyard City and is subject to all charges and assessments levied thereunder.

10. Any interest of Utah County to review the tax assessment of said property, as it has been entitled to assessment for agricultural use (1969 Farmland Assessment Act) pursuant to the provision of Section 59-5-86-105 Utah Code Annotated 1953, as Amended 1973-1975) notice of which is given in instrument recorded February 12, 2015 as Entry No. 10847:2015, in the Office of the County Recorder.

11. Easement in favor of the Mountain States Telephone and Telegraph Co, recorded January 2, 1919 as Entry No. 63 in Book 180 at Page 560 of official records.

12. Slope Easement Agreement granted to the Utah Department of Transportation, recorded February 4, 2011 as Entry No. 11244:2011 of official records.

13. Easement granted to Utah Department of Transportation for the purpose of constructing irrigation facilities including pipeline improvements, recorded June 27, 2011 as Entry No. 46560:2011 of official records.

****

Note: This Commitment includes a judgment and lien search on both the Owner(s) and Buyer(s) named herein (where applicable). The following names have been checked and none were found of public records except as shown herein: Corporation of the Presiding Bishop of the Church of Jesus Christ of Latter-day Saints, a Utah corporation sole

Note: The policy to be issued may contain an arbitration clause. When the amount of Insurance is less than the certain dollar amount set forth in any applicable arbitration clause, all arbitrable matters shall be arbitrated at the option of either the Company or the Insured as the exclusive remedy of the parties. If you desire to review the terms of the policy, including any arbitration clause that may be included, contact the office that issued this Commitment or Report to obtain a sample of the policy jacket for the policy that is to be issued in connection with your transaction.

****

Title Inquiries should be directed to Bruce Bartlett @ (801) 377-1181.

SUBDIVISION PLAT

575 SOUTH PLAT "A"

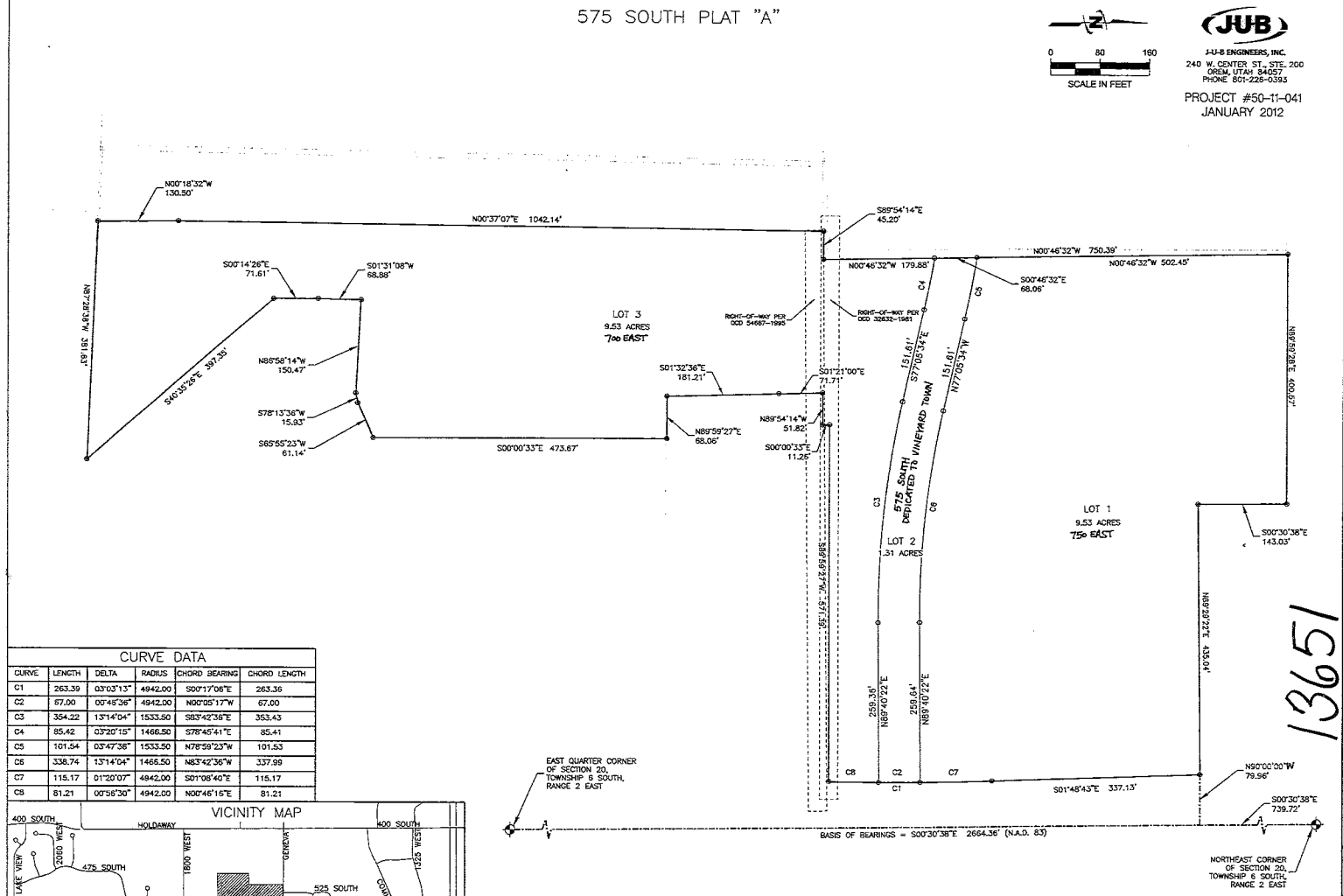

0 80 160

SCALE IN FEET

JUB

J-U-B ENGINEERS, INC.
240 W. CENTER ST., STE. 200
OREM, UTAH 84057
PHONE 801-226-0393

PROJECT #50-11-041
JANUARY 2012

CURVE DATA

CURVE	LENGTH	DELTA	RADIUS	CHORD BEARING	CHORD LENGTH
C1	263.39	03°03'13"	4942.00	S00°17'06"E	263.36
C2	67.00	00°45'36"	4942.00	N00°05'17"W	67.00
C3	354.22	13°14'04"	1533.50	S83°42'36"E	353.43
C4	85.42	03°20'15"	1466.50	S78°45'41"E	85.41
C5	101.54	03°47'38"	1533.50	N78°59'23"W	101.53
C6	338.74	13°14'04"	1466.50	N83°42'36"W	337.99
C7	115.17	01°20'07"	4942.00	S01°08'40"E	115.17
C8	81.21	00°56'30"	4942.00	N00°46'15"E	81.21

VICINITY MAP

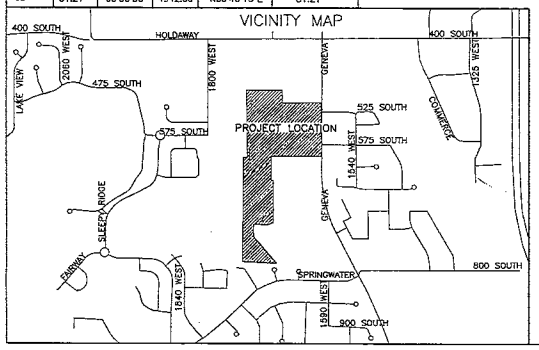

SURVEYOR'S CERTIFICATE

I, STEPHEN P. HOWELL, DO HEREBY CERTIFY THAT I AM A REGISTERED LAND SURVEYOR AND THAT I HOLD LICENSE NO. 7387060 IN ACCORDANCE WITH TITLE 58, CHAPTER 22 OF THE PROFESSIONAL ENGINEERS AND LAND SURVEYORS LICENSING ACT, UTAH CODE ANNOTATED, 1953 AS AMENDED. I FURTHER CERTIFY THAT BY AUTHORITY OF THE OWNERS, A SURVEY WAS MADE UNDER MY DIRECTION OF THE TRACT OF LAND SHOWN ON THIS PLAT AND DESCRIBED BELOW, AND HAVE SUBDIVIDED SAID TRACT OF LAND INTO SEVERAL LOTS TO BE KNOWN AS 575 SOUTH PLAT "A". I CERTIFY THAT SAID SURVEY WAS COMPLETED IN ACCORDANCE WITH SECTION 17-23-17, UTAH CODE ANNOTATED, 1953 AS AMENDED. I FURTHER CERTIFY THAT I HAVE VERIFIED ALL MEASUREMENTS AND THAT MONUMENTS HAVE BEEN PLACED AS SHOWN ON THIS PLAT. I HEREBY STATE THAT THIS PLAT IS TRUE AND CORRECT TO THE BEST OF MY KNOWLEDGE, INFORMATION, BELIEF AND IN MY PROFESSIONAL OPINION.

STEPHEN P. HOWELL, PLS — DATE: March 1, 2012

BOUNDARY DESCRIPTION

BEGINNING AT A POINT WHICH IS SOUTH 00°30'38" EAST ALONG THE SECTION LINE 739.72 FEET AND WEST 79.96 FEET FROM THE NORTHEAST CORNER OF SECTION 20, TOWNSHIP 6 SOUTH, RANGE 2 EAST, SALT LAKE BASE AND MERIDIAN; THENCE SOUTH 01°48'43" EAST 337.13 FEET; THENCE 263.36 FEET ALONG THE ARC OF A 4,942 FOOT RADIUS CURVE TO THE RIGHT, THROUGH A CENTRAL ANGLE OF 03°03'13", WITH A CHORD THAT BEARS SOUTH 00°17'06" EAST, A DISTANCE OF 263.36 FEET; THENCE SOUTH 89°59'27" WEST 571.39 FEET; THENCE SOUTH 00°00'33" EAST 11.26 FEET; THENCE NORTH 89°54'14" WEST 51.82 FEET; THENCE SOUTH 01°21'00" EAST 71.71 FEET; THENCE SOUTH 01°32'36" EAST 181.21 FEET; THENCE NORTH 89°59'27" EAST 68.06 FEET; THENCE SOUTH 00°00'33" EAST 473.67 FEET; THENCE SOUTH 65°55'23" WEST 61.14 FEET; THENCE SOUTH 78°13'36" WEST 15.93 FEET; THENCE NORTH 86°58'14" WEST 150.47 FEET; THENCE SOUTH 01°31'08" WEST 68.88 FEET; THENCE SOUTH 00°14'26" EAST 71.61 FEET; THENCE SOUTH 40°35'26" EAST 397.35 FEET; THENCE NORTH 87°28'26" WEST 381.63 FEET; THENCE NORTH 00°18'32" WEST 130.50 FEET; THENCE NORTH 00°37'07" EAST 1,042.14 FEET; THENCE SOUTH 89°54'14" EAST 45.20 FEET; THENCE NORTH 00°46'32" WEST 750.39 FEET; THENCE NORTH 89°59'27" EAST 400.57 FEET; THENCE SOUTH 00°30'38" EAST 143.03 FEET; THENCE NORTH 89°59'27" EAST 435.04 FEET TO THE POINT OF BEGINNING.

CONTAINS 20.37 ACRES OR 887,312 SQUARE FEET MORE OR LESS.

BASIS OF BEARINGS IS THE LINE BETWEEN THE NORTHEAST CORNER OF SECTION 20 AND THE EAST QUARTER CORNER OF SAID SECTION BEARS SOUTH 00°30'38" EAST (N.A.D. 83).

OWNERS DEDICATION

KNOWN BY ALL PRESENT, THAT WE THE UNDERSIGNED OWNERS OF SAID DESCRIBED TRACT OF LAND DO HEREBY SUBDIVIDE SAID TRACT OF LAND INTO A SUBDIVISION TO BE KNOWN HEREAFTER AS 575 SOUTH PLAT "A".

IN WITNESS WHEREOF, WE HAVE HEREUNTO SET OUR HANDS THIS 21 DAY OF March, 2012.

BY: VINEYARD TOWN

BY: AUTHORIZED AGENT FOR CORP. OF THE PRESIDING BISHOP OF THE CHURCH OF JESUS CHRIST OF LATTER-DAY SAINTS

ACKNOWLEDGEMENT

ENT 36823:2012 Fee $ 13651
JEFFERY SMITH
UTAH COUNTY RECORDER
2012 Mar 05 11:48 AM FEE 32.00 BY EO
RECORDED FOR VINEYARD TOWN

STATE OF UTAH } S.S.
COUNTY OF UTAH }

ON THIS THE 27 DAY OF April, 2012, PERSONALLY APPEARED BEFORE ME, _____ DID SAY WHO BEING DULY SWORN OR AFFIRMED, DID SAY THAT HE/SHE/THEY SIGNED THE OWNER'S DEDICATION FREELY AND VOLUNTARILY AND FOR THE PURPOSES THEREIN MENTIONED.

NOTARY PUBLIC

2-13-2014
MY COMMISSION EXPIRES:

Corporation of the Presiding Bishop of The Church of Jesus Christ of Latter-day Saints, a Utah corporation sole

By: Terry F. Rudd
Its: Authorized Agent

STATE OF UTAH }
COUNTY OF SALT LAKE }

On this 21st day of March, 2012, personally appeared before me Terry F. Rudd, personally known to me to be an Authorized Agent of the Corporation of the Presiding Bishop of The Church of Jesus Christ of Latter-day Saints, a Utah corporation sole, who acknowledged before me that he signed the foregoing instrument as Authorized Agent for Corporation of the Presiding Bishop of The Church of Jesus Christ of Latter-day Saints, a Utah corporation sole, and that the seal impressed on the within instrument is the seal of said Corporation; and that said instrument is the free and voluntary act of said Corporation, for the uses and purposes therein mentioned, and an oath stated that he was authorized to execute said instrument on behalf of said Corporation and that said Corporation executed the same.

WITNESS my hand and official seal.

KIMO D. WOOD
NOTARY PUBLIC-STATE OF UTAH
My Comm. Exp. 11/18/2014
Commission # 652203

Notary Public
Residing at: Salt Lake City, Utah
My commission expires: 11-18-2014

SUBDIVISION PLAT

575 SOUTH PLAT "A"

SITUATE IN THE NORTHEAST QUARTER OF SECTION 20, TOWNSHIP 6 SOUTH, RANGE 2 EAST, SALT LAKE BASE & MERIDIAN
VINEYARD CITY, UTAH COUNTY, UTAH

SCALE 1" = 80' — SHEET 1 OF 1

SURVEYOR SEAL	NOTARY PUBLIC SEAL	CITY-COUNTY ENGINEER SEAL	CLERK-RECORDER SEAL
STEPHEN P. HOWELL, 7387060, STATE OF UTAH			VINEYARD, UTAH, 4/25/12, UTAH

APPROVED AS TO FORM
THIS 31 DAY OF March A.D. 2012
APPROVED: _____
TOWN OF VINEYARD PLANNING COMMISSION CHAIR

APPROVED AS TO FORM
THIS 12 DAY OF April A.D. 2012
APPROVED: _____
TOWN OF VINEYARD MAYOR

APPROVED AS TO FORM
THIS 30 DAY OF March A.D. 2012
APPROVED: Douglas Boyd
TOWN OF VINEYARD FIRE MARSHALL

APPROVED AS TO FORM
THIS 24 DAY OF April A.D. 2012
APPROVED: _____
TOWN OF VINEYARD ATTORNEY

APPROVED AS TO FORM
THIS 5th DAY OF March A.D. 2012
APPROVED: _____
TOWN OF VINEYARD ENGINEER

13651

SEE ADDITIONAL TAX DATA

OLD REPUBLIC TITLE

rev. 07/2016

FACTS	WHAT DOES OLD REPUBLIC TITLE DO WITH YOUR PERSONAL INFORMATION?

Why?	Financial companies choose how they share your personal information. Federal law gives consumers the right to limit some but not all sharing. Federal law also requires us to tell you how we collect, share, and protect your personal information. Please read this notice carefully to understand what we do.
What?	The types of personal information we collect and share depend on the product or service you have with us. This information can include: • Social Security number and employment information • Mortgage rates and payments and account balances • Checking account information and wire transfer instructions When you are *no longer* our customer, we continue to share your information as described in this notice.
How?	All financial companies need to share customers' personal information to run their everyday business. In the section below, we list the reasons financial companies can share their customers' personal information; the reasons Old Republic Title chooses to share; and whether you can limit this sharing.

Reasons we can share your personal information	Does Old Republic Title share?	Can you limit this sharing?
For our everyday business purposes — such as to process your transactions, maintain your account(s), or respond to court orders and legal investigations, or report to credit bureaus	Yes	No
For our marketing purposes — to offer our products and services to you	No	We don't share
For joint marketing with other financial companies	No	We don't share
For our affiliates' everyday business purposes — information about your transactions and experiences	Yes	No
For our affiliates' everyday business purposes — information about your creditworthiness	No	We don't share
For our affiliates to market to you	No	We don't share
For non-affiliates to market to you	No	We don't share

Questions	Go to www.oldrepublictitle.com (*Contact Us*)

Who we are	
Who is providing this notice?	Companies with an Old Republic Title name and other affiliates. Please see below for a list of affiliates.

What we do	
How does Old Republic Title protect my personal information?	To protect your personal information from unauthorized access and use, we use security measures that comply with federal law. These measures include computer safeguards and secured files and buildings. For more information, visit http://www.OldRepublicTitle.com/newnational/Contact/privacy.
How does Old Republic Title collect my personal information?	We collect your personal information, for example, when you: • Give us your contact information or show your driver's license • Show your government-issued ID or provide your mortgage information • Make a wire transfer We also collect your personal information from others, such as credit bureaus, affiliates, or other companies.
Why can't I limit all sharing?	Federal law gives you the right to limit only: • Sharing for affiliates' everyday business purposes - information about your creditworthiness • Affiliates from using your information to market to you • Sharing for non-affiliates to market to you State laws and individual companies may give you additional rights to limit sharing. See the "Other important information" section below for your rights under state law.

Definitions	
Affiliates	Companies related by common ownership or control. They can be financial and nonfinancial companies. • *Our affiliates include companies with an Old Republic Title name, and financial companies such as Attorneys' Title Fund Services, LLC, Lex Terrae National Title Services, Inc., Mississippi Valley Title Services Company, and The Title Company of North Carolina.*
Non-affiliates	Companies not related by common ownership or control. They can be financial and non-financial companies. • *Old Republic Title does not share with non-affiliates so they can market to you*
Joint marketing	A formal agreement between non-affiliated financial companies that together market financial products or services to you. • *Old Republic Title doesn't jointly market.*

Other Important Information

Oregon residents only: We are providing you this notice under state law. We may share your personal information (described on page one) obtained from you or others with non-affiliate service providers with whom we contract, such as notaries and delivery services, in order to process your transactions. You may see what personal information we have collected about you in connection with your transaction (other than personal information related to a claim or legal proceeding). To see your information, please click on "Contact Us" at www.oldrepublictitle.com and submit your written request to the Legal Department. You may see and copy the information at our office or ask us to mail you a copy for a reasonable fee. If you think any information is wrong, you may submit a written request online to correct or delete it. We will let you know what actions we take. If you do not agree with our actions, you may send us a statement.

Affiliates Who May be Delivering This Notice

American First Abstract, LLC	American First Title & Trust Company	American Guaranty Title Insurance Company	Attorneys' Title Fund Services, LLC	Compass Abstract, Inc.
eRecording Partners Network, LLC	Genesis Abstract, LLC	Kansas City Management Group, LLC	L.T. Service Corp.	Lenders Inspection Company
Lex Terrae National Title Services, Inc.	Lex Terrae, Ltd.	Mara Escrow Company	Mississippi Valley Title Services Company	National Title Agent's Services Company
Old Republic Branch Information Services, Inc.	Old Republic Diversified Services, Inc.	Old Republic Exchange Company	Old Republic National Title Insurance Company	Old Republic Title and Escrow of Hawaii, Ltd.
Old Republic Title Co.	Old Republic Title Company of Conroe	Old Republic Title Company of Indiana	Old Republic Title Company of Nevada	Old Republic Title Company of Oklahoma
Old Republic Title Company of Oregon	Old Republic Title Company of St. Louis	Old Republic Title Company of Tennessee	Old Republic Title Information Concepts	Old Republic Title Insurance Agency, Inc.
Old Republic Title, Ltd.	Republic Abstract & Settlement , LLC	Sentry Abstract Company	The Title Company of North Carolina	Title Services, LLC
Trident Land Transfer Company, LLC				