NOTICE OF A VINEYARD
CITY COUNCIL MEETING
July 22, 2020 at 6:00 PM

PUBLIC NOTICE is hereby given that the Vineyard City Council will hold a regularly scheduled meeting on Wednesday, July 22, 2020 at 6:00 p.m. *This meeting will be held electronically because of the gathering restrictions in force due to the COVID-19 Pandemic. This meeting can be viewed live through Zoom*.

Please click on this link https://zoom.us/j/96414057023 or dial 1-301-715-8592 US or 1-253-215-8782 to join the meeting.

AGENDA

Presiding Mayor Julie Fullmer

REGULAR SESSION

1. CALL TO ORDER/INVOCATION/INSPIRATIONAL THOUGHT – *to be announced.*

2. PUBLIC COMMENTS *(15 minutes)*

"**Public Comments"** is defined as time set aside for citizens to express their views for items not on the agenda. Each speaker is limited to three minutes. Because of the need for proper public notice, immediate action **cannot** be taken in the Council Meeting. If action is necessary, the item will be listed on a future agenda, however, the Council may elect to discuss the item if it is an immediate matter of concern.

Public comments can be submitted ahead of time to pams@vineyardutah.org. Public comments will also be taken through the zoom app by either using the 'chat' feature or the 'raise hand' feature when prompted.

3. MAYOR AND COUNCILMEMBERS' REPORTS/DISCLOSURES/RECUSALS

4. STAFF, COMMISSION, AND COMMITTEE REPORTS *(3 minutes each)*

5. DISCUSSION

No items were submitted.

6. CONSENT ITEMS

6.1 Approval of the July 8, 2020 City Council Meeting
6.2 Approval of the HA5 application Budget
6.3 Approval of Lakefront Town Center Phase 1E Condo Plat O
6.4 Approval of Lakefront Town Center Phase 1E Condo Plat OO
6.5 Approval of Lakefront Town Center Phase 1E Condo Plat PP
6.6 Approval of Lakefront Town Center Phase 1E Condo Plat Q
6.7 Approval of Lakefront Town Center Phase 1E Condo Plat R
6.8 Approval of Lakefront Town Center Phase 1E Condo Plat S
6.9 Approval of Lakefront Town Center Phase 1E Condo Plat T
6.10 Approval of Lakefront Town Center Phase 1E Condo Plat U
6.11 Approval of Lakefront Town Center Phase 1E Final Townhomes Subdivision Plat
6.12 Approval of Final Lakefront Town Center Phase 1F Condo Final Plat L
6.13 Approval of Lakefront Town Center Phase 1F Condo Final Plat M
6.14 Approval of Lakefront Town Center Phase 1F Condo Plat N
6.15 Approval of Lakefront Town Center Phase 1F Final Townhomes Subdivision Plat
6.16 Approval of Hampton E Final Plat
6.17 Approval of Hampton F Final Plat

7. MAYOR'S APPOINTMENTS

7.1 Councilmember Appointments
7.2 Bicycle Commission – 5 members

8. BUSINESS ITEMS

8.1 DISCUSSION AND ACTION – Text Amendment to the Zoning Code and Zoning Map Amendment (Ordinance 2020-05) *(A public hearing for this item was held on June 24, 2020.) (This item was continued during the June 24, 2020 City Council meeting and sent back to Planning Commission during the July 8 City Council meeting for further review.)* *(15 minutes)*

Community Development Director Morgan Brim will present a request for a zoning code text amendment. The applicant is proposing the creation of a new zoning district; Neighborhood Commercial (NC) within the Vineyard Zoning Ordinance Section 15.12 Establishment of Districts and Zoning Tables. The applicant is also seeking to apply the new Neighborhood Commercial (NC) district to the property located at 600 S. Geneva Road, Vineyard, Utah 84059 (Parcel Number 53:589:0002) consisting of 1.05 acres, currently zoned Regional Commercial (RC). The mayor and City Council will act to adopt (or deny) these requests by ordinance.

8.2 PUBLIC HEARING – Zoning Text Amendment Section 15.34.060 Accessory Dwelling Units (Ordinance 2020-09) *(this item was continued from the July 8, 2020 City Council meeting.)*

The city is proposing a zoning ordinance amendment to Section 15.34.060 Accessory Dwelling Units to establish minimum lots size, parking and other development standards. The mayor and City Council may act to adopt (or deny) this request by ordinance.

8.3 DISCUSSION AND ACTION – Amending Resolution 2020-05 (RES 2020-12) *(15 minutes)*

City Planner Elizabeth Hart will present proposed changes to the Bicycle Commission Creation resolution. Changing the term from four years to two years, adding a secretary appointment, and minor text amendments. The mayor and City Council will act to adopt (or deny) this request by resolution.

8.4 DISCUSSION AND ACTION –Approval North Waters Edge Clubhouse and Park Dedication Final Plat *(15 minutes)*

Flagship Homes is requesting approval of the North Waters Edge Clubhouse and Park Dedication Final Plat. The mayor and City Council will take appropriate action.

8.5 DISCUSSION AND ACTION – Minor Plat Amendment Application *(15 minutes)*

The mayor and City Council will consider a proposal for a minor plat application in the Westbrook subdivision. They will take appropriate action.

9. CLOSED SESSION

The Mayor and City Council pursuant to Utah Code 52-4-205 may vote to go into a closed session for the purpose of:

(a) discussion of the character, professional competence, or physical or mental health of an individual
(b) strategy sessions to discuss collective bargaining
(c) strategy sessions to discuss pending or reasonably imminent litigation
(d) strategy sessions to discuss the purchase, exchange, or lease of real property
(e) strategy sessions to discuss the sale of real property

10. ADJOURNMENT

The n ext regularly scheduled meeting is August 12, 2020.

The Public is invited to participate in all City Council meetings. In compliance with the Americans with Disabilities Act, individuals needing special accommodations during this meeting should notify the City Recorder at least 24 hours prior to the meeting by calling (801) 226-1929.

I the undersigned duly appointed Recorder for Vineyard, hereby certify that the foregoing notice and agenda was emailed to the Salt Lake Tribune, posted at the Vineyard City Offices, the Vineyard website, the Utah Public Notice website, and delivered electronically to city staff and to each member of the Governing Body.

AGENDA NOTICING COMPLETED ON: July 21, 2020

CERTIFIED (NOTICED) BY: /s/ Pamela Spencer
PAMELA SPENCER, CITY RECORDER

MINUTES OF A VINEYARD
CITY COUNCIL MEETING
This meeting was held electronically, via Zoom,
due to the COVID-19 gathering restrictions
July 8, 2020 at 6:01 PM

Present	**Absent**
Mayor Julie Fullmer	Councilmember John Earnest
Councilmember Tyce Flake	
Councilmember Chris Judd	
Councilmember Cristy Welsh	

Staff Present: City Manager Jacob McHargue, Assistant City Engineer Chris Wilson, City Attorney David Church, Community Development Director Morgan Brim, Building Official George Reid, Water/Parks Manager Sullivan Love, City Recorder Pamela Spencer, Planning Commission Chair Anthony Jenkins

Others Speaking: Brandon Watson with Edge Homes

6:01 PM REGULAR SESSION

1. CALL TO ORDER/PLEDGE OF ALLEGIANCE/INVOCATION/INSPIRATIONAL THOUGHT

Mayor Fullmer called the meeting to order at 6:01 PM. Councilmember Judd led the Pledge of Allegiance and gave the invocation.

2. PUBLIC COMMENTS

Mayor Fullmer called for public comments. Hearing none, she closed the public comment session.

3. MAYOR AND COUNCILMEMBERS' REPORTS/DISCLOSURES/RECUSALS

No council reports were given.

4. STAFF, COMMISSION, AND COMMITTEE REPORTS *(3 minutes each)*

City Manager Jacob McHargue - Mr. McHargue reported the fireworks show, that was held on July 1, went well. Mayor Fullmer thanked everyone who helped with the events.

DRAFT

5. DISCUSSION

No items were submitted.

6. CONSENT ITEMS

6.1 Approval of the June 24, 2020 City Council Meeting

Mayor Fullmer called for a motion.

Motion: COUNCILMEMBER FLAKE MOVED TO APPROVE THE CONSENT ITEM. COUNCILMEMBER WELSH SECONDED THE MOTION. MAYOR FULLMER, COUNCILMEMBERS FLAKE, JUDD, AND WELSH VOTED AYE. COUNCILMEMBER EARNEST WAS ABSENT. THE MOTION CARRIED WITH ONE ABSENT.

7. MAYOR'S APPOINTMENTS

No names were submitted.

8. BUSINESS ITEMS

8.1 DISUSSION AND ACTION – <u>Text Amendment to the Zoning Code and Map (Ordinance 2020-05)</u> (This item was continued from the June 24, 2020 City Council meeting.*) The City Council will send this item back to Planning Commission for further amendments.*

Community Development Director Morgan Brim will present a request for a zoning code text amendment. The applicant is proposing the creation of a new zoning district; Neighborhood Commercial (NC) within the Vineyard Zoning Ordinance Section 15.12 Establishment of Districts and Zoning Tables. The applicant is also seeking to apply the new Neighborhood Commercial (NC) district to the property located at 600 S. Geneva Road, Vineyard, Utah 84059 (Parcel Number 53:589:0002) consisting of 1.05 acres, currently zoned Regional Commercial (RC). The mayor and City Council will act to adopt (or deny) these requests by ordinance. (A public hearing for this item was held on June 24, 2020.)

Mayor Fullmer called for a motion.

Motion: COUNCILMEMBER FLAKE MOVED TO SEND ITEM 8.1 BACK TO PLANNING COMMISSION FOR REVIEW. COUNCILMEMBER JUDD SECONDED THE MOTION. ROLL CALL WENT AS FOLLOWS: MAYOR FULLMER, COUNCILMEMBERS FLAKE, JUDD, AND WELSH VOTED AYE, COUNCILMEMBER EARNEST WAS ABSENT. THE MOTION CARRIED WITH ONE ABSENT.

8.2 PUBLIC HEARING – <u>Zoning Text Amendment Section 15.34.060 Accessory Dwelling Units (Ordinance 2020-09)</u>

The city is proposing a zoning ordinance amendment to Section 15.34.060 Accessory Dwelling Units to establish minimum lot sizes, parking and other development standards. *Community Development Director Morgan Brim is requesting that this item be continued to the July 22, 2020, City Council meeting as Planning Commission wanted to review it further.*

Mayor Fullmer called for a motion.

DRAFT

Motion: COUNCILMEMBER JUDD MOVED TO CONTINUE ITEM 8.2, THE PUBLIC HEARING, TO THE JULY 22, 2020 CITY COUNCIL MEETING. COUNCILMEMBER FLAKE SECONDED THE MOTION. ROLL CALL WENT AS FOLLOWS: MAYOR FULLMER, COUNCILMEMBERS FLAKE, JUDD, AND WELSH VOTED AYE. COUNCILMEMBER EARNEST WAS ABSENT. THE MOTION CARRIED WITH ONE ABSENT.

8.3 DISCUSSION AND ACTION – <u>Text Amendment to the Zoning Code (Ordinance 2020-07) (This item was continued from the June 24, 2020 City Council meeting.)</u>

Community Development Director Morgan Brim will present a request for text amendments to the Zoning Code Section 15.34.120 Domestic Livestock and Fowl to provide allowances for horses and other animals to be kept on lots of 3/4 acre or larger. The mayor and City Council will act to adopt (or deny) this request by ordinance. (A public hearing for this item was held on June 24, 2020.)

Mayor Fullmer turned the time over to Community Development Director Morgan Brim.

Mr. Brim explained that most of the council wanted to change the code back to one (1)-acre.

Councilmember Judd sought clarification, asking if they were limiting it to a single parcel of at least one (1)-acre or if people could consolidate parcels. Mr. Brim replied yes, one (1)-acre minimum per parcel. Residents would be required to go through the legal consolidation process if they had two half acres.

Mayor Fullmer called for a motion.

Motion: COUNCILMEMBER JUDD MOVED TO APPROVE ORDINANCE 2020-07 AS PRESENTED WITH THE ONE (1)- ACRE CHANGE. COUNCILMEMBER WELSH SECONDED THE MOTION. ROLL CALL ALL WENT AS FOLLOWS: MAYOR FULLMER, COUNCILMEMBERS FLAKE, JUDD, AND WELSH VOTED AYE. COUNCILMEMBER EARNEST WAS ABSENT. THE MOTION CARRIED WITH ONE ABSENT.

8.4 PUBLIC HEARING – <u>Flood Damage Prevention Zoning Ordinance (Ordinance 2020-08)</u>

Public Works Director/City Engineer Don Overson will present the Zoning Ordinance to adopt regulations designed to minimize flood losses. The mayor and City Council will act to adopt (or deny) these requests by ordinance.

8.5 DISCUSSION AND ACTION – <u>National Flood Insurance Program Regulations (Resolution 2020-11)</u>

Public Works Director/City Engineer Don Overson will present a resolution in connection with the National Flood Insurance Program and their Regulations and to appoint staff to assist in execution of the requirements for floodplain insurance and control measures. The mayor and City Council will act to adopt (or deny) these requests by resolution.

Both 8.4 and 8.5 were discussed together.

DRAFT

Mayor Fullmer called for a motion to open the public hearing.

Motion: COUNCILMEMBER FLAKE MOVED TO OPEN THE PUBLIC HEARING AT 6:09 PM. COUNCILMEMBER JUDD SECONDED THE MOTION. MAYOR FULLMER, COUNCILMEMBERS FLAKE, JUDD, AND WELSH VOTED AYE. COUNCILMEMBER EARNEST WAS ABSENT. THE MOTION CARRIED WITH ONE ABSENT.

Mayor Fullmer turned the time over to Assistant City Engineer Chris Wilson.

Mr. Wilson explained that the Federal Emergency Management Agency (FEMA) helped to establish floodplain studies and maps to help the city know where the possible emergency flood areas might be and how things might be affected in the event of a flood. Vineyard was not incorporated when they made the last update to the maps so when the 2017 update for the flood insurance rate map study started, Vineyard was invited to participate. The study was completed in June of 2019. To complete the application, it required the city to adopt a Flood Damage Prevention Ordinance and pass a resolution to join the National Flood Insurance program (NFI). The benefits of joining the program were that the federal government would subsidize flood insurance and FEMA would help with natural disasters. It would be a financial benefit to the city with aid for natural disasters. Currently the high-risk areas fall outside of the Vineyard city boundaries. Lindon Hollow was the closest floodplain. In general, there were no real flood risks. The only high-risk area would be along the shoreline of Utah Lake. Staff and Planning Commission were recommending approval.

Mayor Fullmer called for public comments. Hearing none, she called for a motion to close the public hearing.

Motion: COUNCILMEMBER JUDD MOVED TO CLOSE THE PUBLIC HEARING AT 6:14 PM. COUNCILMEMBER WELSH SECONDED THE MOTION. MAYOR FULLMER, COUNCILMEMBERS FLAKE, JUDD, AND WELSH VOTED AYE. COUNCILMEMBER EARNEST WAS ABSENT. THE MOTION CARRIED WITH ONE ABSENT.

Mayor Fullmer called for questions.

Mr. Church explained that the ordinance was nonnegotiable. The city was required to pass the ordinance as presented. If the city did not have the ordinance then the flood insurance would not be available to the residents. There were also regulations that would apply to building permits if they fell within the floodplain boundaries.

Mayor Fullmer called for a motion.

Motion: COUNCILMEMBER JUDD MOVED TO ADOPT ORDINANCE 2020-08 AND RESOLUTION 2020-11. COUNCILMEMBER WELSH SECONDED THE MOTION. ROLL CALL WENT AS FOLLOWS: MAYOR FULLMER, COUNCILMEMBERS FLAKE, JUDD, AND WELSH VOTED AYE. COUNCILMEMBER EARNEST WAS ABSENT. THE MOTION CARRIED WITH ONE ABSENT.

8.6 DISCUSSION AND ACTION – <u>Edge Homes Lakefront at Vineyard Town Center Preliminary Plat</u>

The applicant is requesting approval for a preliminary plat for Lakefront at Vineyard Town Center. The mayor and City Council will take appropriate action.

DRAFT

Mayor Fullmer turned the time over to Community Development Director Morgan Brim.

Mr. Brim explained that there were issues with the wetlands, which did not allow for residential. The developer was in the process of trying to get it re-delineated. The amended plat removed 22 units and added 2.1 acres of open space. They were increasing the overall open space and reducing the density. The new plan allowed them to keep some of the density by adding townhomes and condominiums. There was a concern that if they moved the single family lots to another area, they would be out of place and become rentals. A townhome product would blend better. The plan turned the townhomes to face onto the park. There would be alley loaded in the back to create a nice transition between the open space and the townhomes.

Mr. Brim said the during the site plan approval the Planning Commission required a small fence for delineation between the front yard area and the wetlands and as well as a trail connection to 300 West down to the Lakeside Trail. He said that staff and Planning Commission were recommending approval. One item of concern was to ensure that the area stayed open space. Staff suggested that they approve the final plat with the condition that the wetlands be noted as common area open space. This would prevent someone from adding additional residential if the wetlands were re-delineated.

Brandon Watson with Edge Homes said that there had been concerns with the trail in that area and they had been enhancing it and making it safe to use. He said that they were okay with the deed restriction. He said that it would be too big of a liability to build on the wetlands because of water there. They would want to avoid flooding. He felt it was best to drop the units and turn it into open space. He explained that they were working with the Army Corps of Engineers to see what they could do with area in terms of amenities. He mentioned that the Army Corps had called it a low-quality wetland.

Mayor Fullmer called for questions.

Councilmember Welsh said that she had concerns and had attended the Planning Commission meeting so that she could understand the proposal. She felt that this would be a positive change. Her concern was that the density would close the view corridor to the lake but having the wetlands would give people a sight line to the lake. She asked Mr. Watson what the Army Corps would allow them to do to improve the low-quality wetlands. Mr. Watson replied that they would allow them to grub the area and get rid of the phragmites and other invasive plants. He mentioned that the Army Corps had a list of what they could plant in the area and that Planning Commissioner Amber Rasmussen had asked to give input on what they planted in the area.

Councilmember Welsh asked about the boardwalk in the wetland area. Mr. Watson replied that they wanted to put a pedestrian bridge over the wetlands area so they did not disconnect the development, but needed to work with the Army Corps on what would be allowed.

Councilmember Judd asked who would be liable to maintain the wetlands area once they had it cleaned up. Mr. Watson replied that they had hired a consultant to work with the Army Corps. He said that if the wetlands delineation went away then they could fill the area with grass and other plantings. If it did not go away then they wanted to upgrade and maintain the area at a level above the low-quality wetlands.

Councilmember Judd asked about the roads they were building. Mr. Watson replied that they were building 300 West so that it tied into 400 North and the area near the Vineyard Connector.

DRAFT

Councilmember Judd asked where they were in the process of delineation and if they would have the roads installed before the determination happened. Mr. Watson replied that there was a federal ruling that was approved in December 2019 eliminating wetlands but if the wetlands stayed, there was a nationwide permit which would allow them to disturb up to 10 percent of the wetlands. He said once the permit was approved it would take 30 to 90 days to get the road completed. Councilmember Judd expressed concern with approving the plat not knowing if the permit would be approved. Mr. Church explained that this was a preliminary plat and that once it was approved the developer could take it to the Army Corps.

Councilmember Judd asked if they could move the open space against the current park that was being installed, if the wetlands went away. Mr. Watson replied no, because there was still water there.

Mayor Fullmer asked if they should add timelines for the delineation study, clearing the area, and maintaining it. Mr. Church replied that it would be difficult to add it now without knowing whether or not they were going to be wetlands. Mr. Brim said that if it were delineated as non-wetlands, they would have to maintain the open space according to the Landscaping Code.

Mayor Fullmer called for further questions or a motion.

Motion: COUNCILMEMBER JUDD MOVED TO APPROVE THE PROPOSED LAKE FRONT AT TOWN CENTER PRELIMINARY PLAT AMENDMENT DATED JULY 2, 2020, PRESENTED AT THE JULY, 8, 2020 CITY COUNCIL MEETING WITH THE FOLLOWING CONDITIONS:

- THE AREA DELINEATED AS WETLANDS IN THE JULY 2, 2020 PRELIMINARY PLAT BE NOTED ON THE FINAL PLAT AS COMMON AREA OPEN SPACE AND PRIOR TO APPROVAL OF A FINAL PLAT, A CONTRACT ENSURING THIS WETLAND AREA BE PRESERVED AS OPEN SPACE AND RECREATIONAL AMENITIES, RESTRICTING RESIDENTIAL UNITS, BE APPROVED BETWEEN THE CITY AND PROPERTY OWNER.

COUNCILMEMBER WELSH SECONDED THE MOTION. MAYOR FULLMER, COUNCILMEMBERS FLAKE, JUDD, AND WELSH VOTED AYE. COUNCILMEMBER EARNEST WAS ABSENT. THE MOTION CARRIED WITH ONE ABSENT.

8.7 DISCUSSION AND ACTION – <u>Bid approval for the Public Works Facility</u>

Assistant City Engineer Chris Wilson is requesting approval of the low bidder, Patriot Construction, for the building of the Public Works facility located at 282 West 1600 North, in Vineyard. The mayor and City Council will take appropriate action.

Mayor Fullmer turned the time over to Assistant City Engineer Chris Wilson.

Mr. McHargue explained that the building would be located on the site purchased from Lindon a few years ago. He said that they had done some improvements to the property. They added a fence and an access road, and were storing equipment there. He mentioned that it needed to be a building that was temperature controlled. He said that staff had hired Fink Architecture to do the design and then they put the project out for bids. Staff was recommending approval of the low bid which was Patriot Construction.

Mr. Wilson showed a rendering of the building. He said that it was a simple design and structure to get the basic amenities, with storage and employee space. He mentioned that there would be no office space at this time. He reviewed the design. There were three (3) bays, two (2) of which

were pull-through bays, a basic bathroom, utility room, locker room, and work station areas. There was also a small upstairs mezzanine to provide storage space and a breakroom, electrical, I.T., SCADA system, and a mechanical room. He said that there would be room to add onto the south side of the building in the future. He showed where the building would be located on the site.

Mayor Fullmer called for questions.

Councilmember Judd asked about the existing $500,000 budget and how they were getting to the $1.5 million. Mr. Wilson replied that the original budget was approved two (2) years ago because the original quotes were for a shell building. Adding the additional amenities and with the passage of time it had driven the cost up. He said that there were 16 bidders and the bids were very competitive and he felt that they could not get a better bid amount. Councilmember Judd asked if there was a requirement for the bidders to add a contingency amount. Mr. Wilson replied that there were a couple of allowances which were not as necessary as others. They were the removal of any material encountered while working such as large rocks, the other was the removal of any contamination. Those allowance came to about $100,000 and according to the Geotech report there was a 99 percent chance that they would not use those allowances. Councilmember Judd asked if it was a fixed price or a cost-plus contract. Mr. Wilson replied that it was a turnkey contract. He said the other two allowances were a $20,000 line item for special testing and inspections and a $40,000 contingency for any owner modifications. He suggested that it had about $150,000 contingency built in. There was a discussion about the contracts.

Councilmember Judd asked if the most they would pay was $1,493,250. Mr. Wilson replied yes.

Mayor Fullmer called for further questions or a motion.

Councilmember Judd asked where the funds would be coming from. Mr. McHargue replied that the initial funding would come from the Capital Projects Fund as a loan and be paid back, over time, from the Enterprise Funds. Councilmember Judd asked how long it would take to repay the loan. Mr. McHargue replied that there was not a set time and each year they would do a calculation to see how much the funds could pay on the loan.

Motion: COUNCILMEMBER JUDD MOVED TO ALLOW STAFF TO PROCEED WITH THE CONSTRUCTION OF THE PUBLIC WORKS FACILITY PROJECT AND CONTRACT WITH PATRIOT CONSTRUCTION AS PRESENTED, WITH THE TOTAL AMOUNT OF $1.5 MILLION. COUNCILMEMBER FLAKE SECONDED THE MOTION. MAYOR FULLMER, COUNCILMEMBERS FLAKE, JUDD, AND WELSH VOTED AYE. COUNCILMEMBER EARNEST WAS ABSENT. THE MOTION CARRIED WITH ONE ABSENT.

PUBLIC COMMENT

Mayor Fullmer read a statement from resident Dan Stoval living in the Providence subdivision. Mr. Stoval expressed concern about how the HOA had amended their regulations to restrict parking on the street. As the streets are public the HOA cannot enforce the regulations and have cars towed. He requested that the city change their ordinance to allow the HOA to enforce the rules. Mr. McHargue stated that he would follow up with Mr. Stoval.

DRAFT

8.8 DISCUSSION AND ACTION – Interlocal agreement with Utah County for financial disbursement from the CRF (Resolution 2020-08)

The mayor and city council will discuss and act to approve the resolution and allow the mayor to sign an interlocal agreement with Utah County for financial disbursement from the Coronavirus Relief Fund (CRF) made available through the Coronavirus Aid, Relief, and Economic Security Act ("CARES" Act). The mayor and City Council will act to adopt (or deny) this request by resolution.

Mayor Fullmer asked if the council had had the opportunity to read the resolution and the agreement.

Mayor Fullmer turned the time over City Manager Jacob McHargue.

Mr. McHargue explained that the CARES Act money was distributed to the states and to local governments over 500,000 residents. Utah County received a direct disbursement. They chose to distribute some of their funding to the municipalities, based on population. The money could be used for expenses related to coronavirus. He said that they approving the agreement with the county to have the fund disbursed to them. They would have a discussion at another council meeting about what items they could use the money for.

Councilmember Judd said that he liked the idea of being able to discuss items they feel were important, at the next council meeting. Mr. McHargue said that he would be meeting with Peter Brown with Utah County to present a list of items. He would then distribute the approved list to the council.

Mr. Church explained that the county was responsible for how the funds were to be used and were under no obligation to share the funds. This agreement obligated the city to use the funds in accordance with the county's regulations. The city would be accountable for the misuse of the funds. Councilmember Judd ask if the money could not be used for economic recovery. Mr. McHargue replied yes, but on the county was disbursing those funds.

Motion: COUNCILMEMBER JUDD MOVED TO APPROVE RESOLUTION 2020-08 AND AUTHORIZE THE MAYOR TO SIGN THE AGREEMENT WITH THE COUNTY. COUNCILMEMBER WELSH SECONDED THE MOTION. ROLL CALL WENT AS FOLLOWS: MAYOR FULLMER, COUNCILMEMBERS FLAKE, JUDD, AND WELSH VOTED AYE. COUNCILMEMBER EARNEST WAS ABSENT. THE MOTION CARRIED WITH ONE ABSENT.

9. CLOSED SESSION

No closed session was held.

10. ADJOURNMENT

Mayor Fullmer called for a motion to adjourn the meeting.

Motion: COUNCILMEMBER FLAKE MOVED TO ADJOURN THE MEETING AT 7:02 PM. COUNCILMEMBER WELSH SECONDED THE MOTION. MAYOR FULLMER, COUNCILMEMBERS FLAKE, JUDD, AND WELSH VOTED AYE. COUNCILMEMBER EARNEST WAS ABSENT. THE MOTION CARRIED WITH ONE ABSENT.

DRAFT

The next regularly scheduled meeting is July 22, 2020.

MINUTES APPROVED ON: _____

CERTIFIED CORRECT BY: /s/ Pamela Spencer
PAMELA SPENCER, CITY RECORDER

DRAFT

VINEYARD CITY COUNCIL STAFF REPORT

Meeting Date: 7-22-2020

Agenda Item: 6.2 2020 HA5 Budget

Department: Public Works

Presenter: Chris

Background/Discussion:
We are continually working to preserve and extend the life our infrastructure to save future replacement dollars. For asphalt preservation we have used the HA5 product as a preservation coating in our subdivisions. There is only one company, Holbrook Asphalt Co., that provides this product and therefore it is soul sourced. Our goal is to complete yearly projects as the budget allows by area priority. This year's asphalt preservation will focus on City Trails and 3 subdivisions; The Meadows, The Elms, and Ashley Acres. The work will include cleaning, surface prep, and the HA5 preservation coating. While working on these subdivisions, the contractor will also complete warranty touch up in areas completed in past years. The application of the HA5 product will require complete closure of roads within subdivisions for up to a day. The Elms subdivision, due to the single access and dead end, will require a complete closure and the contractor will be providing a shuttle service for the residents impacted. The contractor will notify all residents and work with staff to minimize the impact to the residents. A $75,000 placeholder was included in the budget for this work until the actual costs were received. The work proposed will need this budget item increased to $110,000.

Fiscal Impact:
This project is paid for by the transportation and road maintenance fund.
The HA5 place holder budget is $75,000
Holbrook Asphalt Co. proposal is $107,484.70
We are requesting to increase this budget to $110,000 to cover the proposed work with a small contingency.

Recommendation:
Motion to Approve

Sample Motion:
Motion to approve the 2020 HA5 project budget and allow staff to proceed with the work as proposed.

Attachments:
Holbrook Asphalt Co. Proposal

Proposal

Project Location	Proposal #	Date Issued	PO/LD #
Multiple Locations - See Maps E Center Street Vineyard UT 84058	HAU941099	6/4/2020	

Terms

Due Upon Completion

Bill To

Vineyard City
ATTN: Chris Wilson
240 East Gammon Road
Vineyard UT 84058

Adviser Information

Aaron Eppley
P: 435-703-0023 | E: aaron@holbrookasphalt.com

Description

2020 Vineyard HA5 Proposal

Item	Quantity	UM	Rate	Amount
HA5 Streets				
HA5 (HDMB) Clean & prepare surface using high pressure air & wire bristle brooms. Install "HA5" High Density Mineral Bond advanced performance pavement preservation treatment. No guarantee surface treatments will adhere to areas saturated with motor oil. HA5 meets demands of High Density Mineral Bond Specification established by agency engineers.	199,454	SqFt	0.215	42,882.61
Shuttle Service It is estimated that ONE day of a shuttle service will be needed for this project. If additional shuttle service days are needed for this project associated measures and costs will be added.	1	Ea	1,150.00	1,150.00
HA5 Trails				
HA5 (HDMB) Clean & prepare surface using high pressure air & wire bristle brooms. Install "HA5" High Density Mineral Bond advanced performance pavement preservation treatment. No guarantee surface treatments will adhere to areas saturated with motor oil. HA5 meets demands of High Density Mineral Bond Specification established by agency engineers.	295,126	SqFt	0.215	63,452.09

Note

(1) Traffic control will require 24_hour road closures. If additional closures/ methods are required, additional traffic control costs will be added.
(2) Taxes are not included in this proposal. If required, the costs will be added to the project invoices.
(3) Standard cleaning is included in the unit price. Items NOT considered to be Standard Cleaning include: heavy dirt, mud, construction or landscaping debris, and foreign material on the pavement surface. All non-standard cleaning requirements must be completed and approved by a Holbrook Asphalt representative prior to the start of project. If required, additional/heavy cleaning will be invoiced at $1,750 per crew per day.

Total	$107,484.70

Proposal

Date	Number
6/4/2020	HAUB02014

Terms and Conditions

Proposal and pricing void 45 days from date listed on proposal. Any proposals signed that are dated prior to 45 days are are subject to revision or updated pricing. Adviser may request that the proposal be reissued to client for signing.

EXCLUSIONS: Holbrook Asphalt Co. (“Contractor”) is not liable for any ADA compliance, if needed, Client should consult with an ADA compliance professional prior to specific project approval. Engineering, tests, permits, inspection fees and bonding fees are not included in price unless stated otherwise. Contractor will not be responsible for its product failure if said failure is directly or indirectly caused by existing surface conditions and any written or implied warranty will become void. Existing surface conditions are defined as: water drainage issues, delamination or failure of existing paint, asphalt, surface sealer, wearing course or any other material that is in a failing or in an unstable state. If any portion of the project area has existing surface conditions, the entire project area may have similar underlying issues and treated as such. Client is responsible for having automatic or manual gates open on day of work. Any damage to gates, sensors or loop sensors above or below asphalt are responsibility of Client. Any hot-applied sealants will not be exactly level with pavement surface as material settles to fill voids. There may also be excess material on pavement surface. Regarding asphalt, concrete and excavation work: we are not responsible for subgrade scarification, re-compaction or concrete damage due to removal of asphalt. Pricing based on no more than depth dimensions listed. Upon construction, if it is determined that concrete or asphalt depth is greater than the estimation, client agrees to pricing adjustment as a result of project overrun. Not responsible for existing condition of subgrade, drainage in areas of less than 1% grade, adjustments of utilities, manholes and valve covers. We are not responsible for any damage to underground utilities and cost to repair the same.

PAYMENT TERMS: Due Upon Completion (Completion by line item 'Progress Billing' and/or completion of project core). There may be concerns from Client following completion. Upon request, post-project walk-throughs may be scheduled to review concerns. Payment will remain due upon invoice. Contractor is committed to client satisfaction and resolving concerns, though at times, this may be delayed. As the Client, I agree to not withhold payment due to walkthrough requests, cleaning, touch-up, or warranty concerns. I understand and agree that I will be billed for towing as incurred and will be due on receipt. I agree that if I demand to retain payment until warranty work or touch up is completed, the retainer will be a fixed amount of 5% of invoice, up to $750.00. Contractor reserves the right to charge up to 50% of Proposal Total if client cancels project within 25 days of scheduled project commencement. I agree that I may be billed as each line item is completed and each item may become their own respective invoice.

I understand that interest accrues on all past-due amounts at 24% per annum from invoice date, until paid in full; and may be billed collection fees of up to 40%, and Client agrees to pay all fees accrued by collection efforts. These terms apply to all amount(s) incurred by me and for whom I have committed management responsibility, regardless of timing. Total Proposal price includes one mobilization unless stated otherwise. Additional mobilizations may be billed up to $3,500 per additional mobilization. This agreement provides Client written Notice of Right to Lien. Pricing does not include Bonding or prevailing wage/Davis Bacon Certification, unless stated otherwise. By signing this proposal (contract), I agree that Holbrook Asphalt Co. may not be held liable for delays, conditions, or Acts of God beyond their control, which situations may delay or cause cancelation partially or entirely on any project. Delays include project demand and material supply.

INSURANCE: These insurance limits are listed by Holbrook Asphalt to inform Client of such. Any premiums above the following to be paid by Client. This disclosure overrules any other contract language wherein Holbrook Asphalt agrees to differing limits. Certificates available upon request. GENERAL LIABILITY: $1m (inc.), $2m (agg.) AUTO: $1m UMBRELLA: $2m (inc.), $2m (agg.) PERSONAL INJ: $1m WORKERS COMP: $1m (Ver.2018.3)

I have read and agree with these terms and conditions. I elect to proceed with the signed option below.

HAU941099 - 2020 Vineyard BMO and HA5 Proposal

Signature _____ Print Name _____ Date _____

Holbrook Asphalt Co _____

Vineyard HA5

HA5 Streets - Blue
HA5 Trails - Yellow

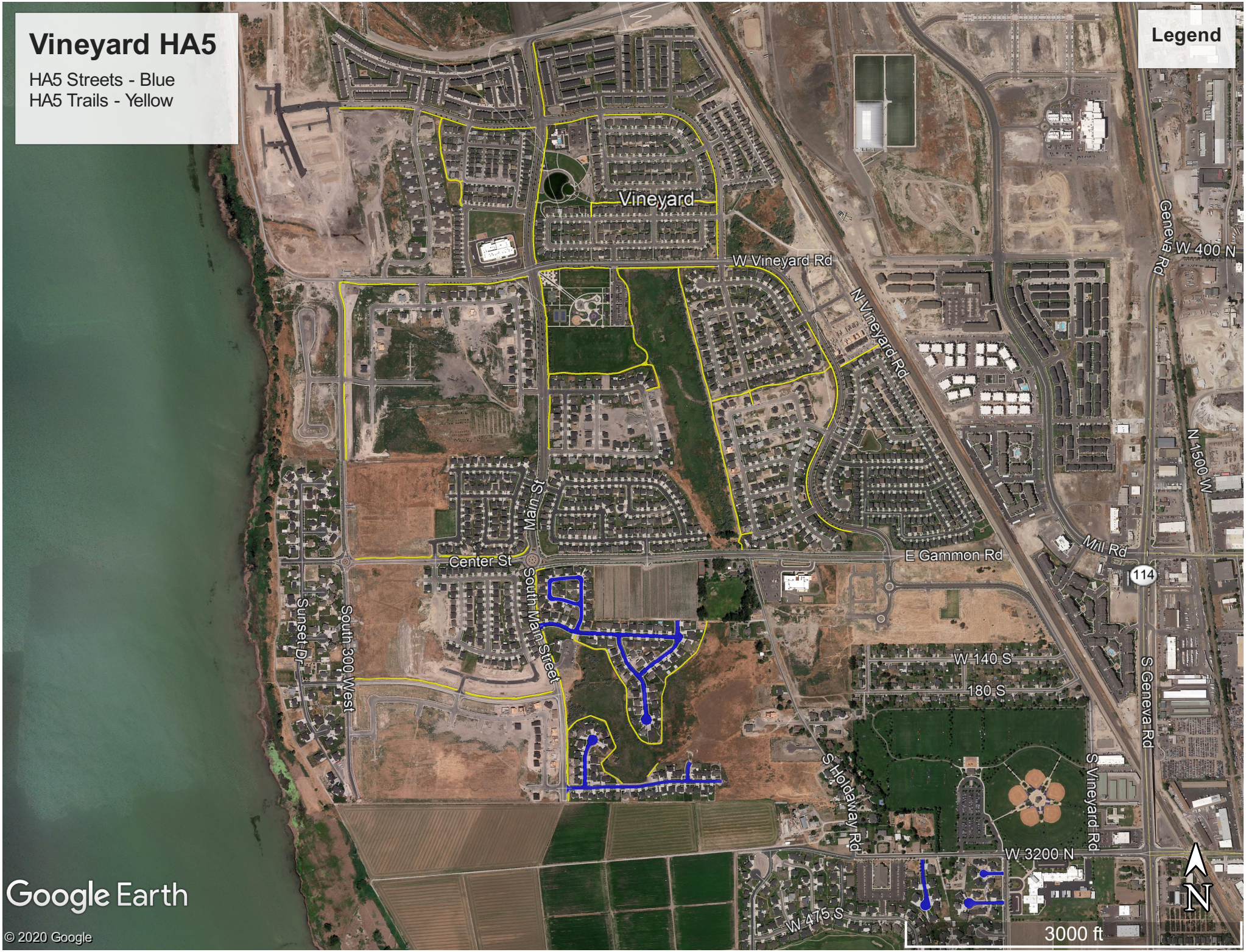

Date: July 22, 2020
From: Elizabeth Hart, planner
To: City Council
Item: **6.3-6.15** Lakefront @ Vineyard Town Center Final Plats Phase 1E and 1F
Address: ~ 300 West and Vineyard Loop Road
Applicant: Edge Homes, LLC

INTRODUCTION

The applicant, Edge Homes, is requesting final plat approval for fifty-six (56) townhome units and one-hundred and ten (110) condominium units within the Lakefront at Vineyard Town Center development. The subject development is located within the Town Center Lake Front Residential district, which extends north from 400 North to the Vineyard Connector and extends west from the Waters Edge subdivisions the Preserve and Leisure Villas to the edge of the existing Vineyard Road. The proposed plat buildings are located at approximately 415 North and 300 West.

ANALYSIS

The City Council approved a preliminary plat for the Lakefront at Vineyard Town Center development in early in 2019. This approval entitled the project with 685 residential units: 400 condominiums, 270 townhomes and 15 single family lots. Due to conflicts with wetland delineation within the southern portion of the project area, the developer went through an amendment to the preliminary plat on July 8, 2020 with the city council (see Exhibit A). The proposed finals plats are a portion of the new units approved in the recent preliminary plat.

Phase 1E Final Plat Analysis

Standard	1E Townhomes	1E Condo Bldg O	1E Condo Bldg OO	1E Condo Bldg PP	1E Condo Bldg Q	1E Condo Bldg R	1E Condo Bldg S	1E Condo Bldg T	1E Condo Bldg U
# of Units	26	10	10	10	10	10	10	10	10
Front Setback Min: 5' Max: 20'	Units 801-817: 18'-19' Units 906-914: 14'=-15'	All buildings meet the front setback requirements							
Min. Side Yard Setback 5'	10'+	at least 10 feet between condo buildings							
Min. Rear Setback 5' with Alley	Units 906-914: 18'	At least 20 feet, driveway							
Min. Rear Setback 20' without Alley	Units 801-817: 78'+	NA							
Min. Vineyard Connector ROW Setback 14'	NA, these buildings are not near the Vineyard Connector								

Phase 1F Final Plat Analysis

Standard	1F Townhomes	1F Condo Bldg L	1F Condo Bldg M	1F Condo Bldg N
# of Units	26	10	10	10
Front Setback Min: 5' Max: 20'	18'-19'	All buildings meet the front setback requirement		
Min. Side Yard Setback 5'	10'+	at least 10 feet between condo buildings		
Min. Rear Setback 5' with Alley	NA	At least 20 feet, driveway		
Min. Rear Setback 20' without Alley	20-30' feet	NA		
Min. Vineyard Connector ROW Setback 14'	NA, these buildings are not near the Vineyard Connector			

Staff has reviewed the final plat and has found them to be in conformance with the Town Center zoning ordinance, staff is recommending approval with the listed conditions.

FINDINGS:
With the proposed conditions, the preliminary plat meets the following findings:

- It is in conformance with the Town Center Zoning Ordinance.

STAFF RECOMMENDATION:
Staff is recommending approval to the City Council with the following conditions:

1. The applicant addresses the Engineering departments comments prior to recording.
2. The applicant pays any outstanding fees.
3. The applicant is subject to all federal, state and local laws.

PROPOSED MOTION:
"I move to approve of the proposed Lakefront @ Vineyard Town Center Final Plats Phase 1E and Phase 1E Buildings O, OO, PP, Q, R, S, T, U, and Phase 1F and Phase 1F Buildings L, M, N with a total of one-hundred and sixty-six (166) townhome and condominium units.

Attachments:
Exhibit A
Final Plats

GRAPHIC SCALE

(IN FEET)
1 inch = 60 ft.

CONCEPT NARRATIVE RESIDENTIAL

LOCATED IN:	VINEYARD, UTAH
CONDO UNITS	120
TOWNHOME UNITS	66
TOTAL UNITS	186
GARAGE STALLS	252
(2 PER TOWNHOME/SINGLE FAMILY UNIT; 1 PER CONDO UNIT)	
DRIVEWAY STALLS	252
(2 PER TOWNHOME/SINGLE FAMILY UNIT; 1 PER CONDO UNIT)	
NEW PUBLIC STALLS	28
(TO BE ADDED TO 300 W IN PHASES 5-9)	
GUEST PARKING STALLS	84
TOTAL PRIVATE PARKING	504
TOTAL GUEST & PUBLIC PARKING	112
ADA CONDO BUILDINGS:	O

UNIT COUNT BEFORE:		**UNIT COUNT AFTER:**	
PHASE 5 (1-E)	45	PHASE 5 (1-E)	30
PHASE 6 (1-F)	100	PHASE 6 (1-F)	105
PHASE 7 (1-G)	10	PHASE 7 (1-G)	20
PHASE 8 (1-H)	38	PHASE 8 (1-H)	17
PHASE 9 (1-I)	15	PHASE 9 (1-I)	14
PHASE 1 TOTAL:	208		186

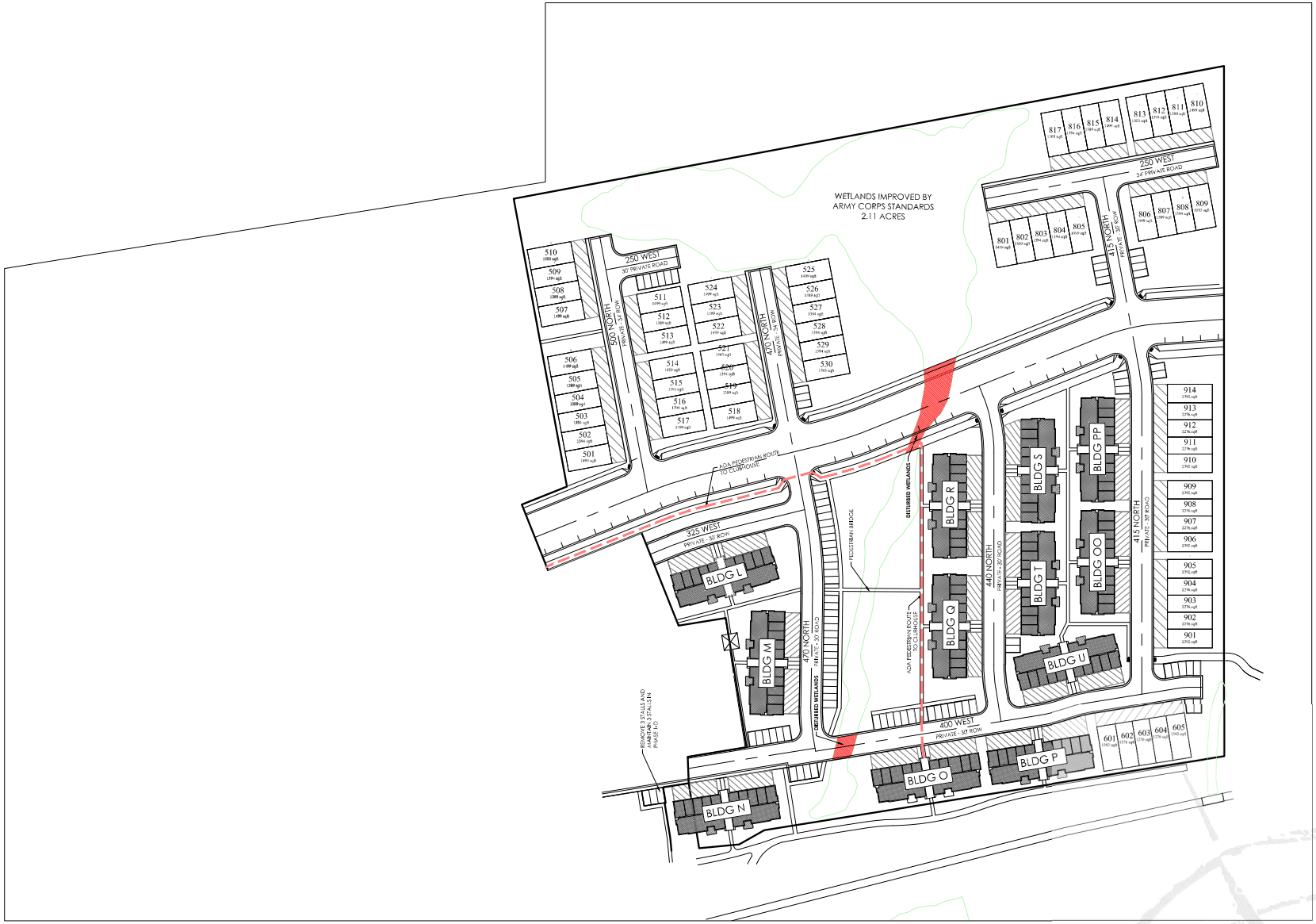

LAKEFRONT AT VINEYARD TOWN CENTER site plan

VINEYARD CITY, UTAH COUNTY
6/10/2020
18-006

FOCUS ENGINEERING AND SURVEYING, LLC

LAKEFRONT
@ VINEYARD TOWN CENTER
PHASE 1E, PLAT O
CONDOMINIUMS
(AMENDING PORTIONS OF LOT 4, GENEVA PARK WEST SUBDIVISION)
PORTIONS OF SECTION 7, T6S, R2E,
SALT LAKE BASE & MERIDIAN
VINEYARD CITY, UTAH COUNTY, UTAH

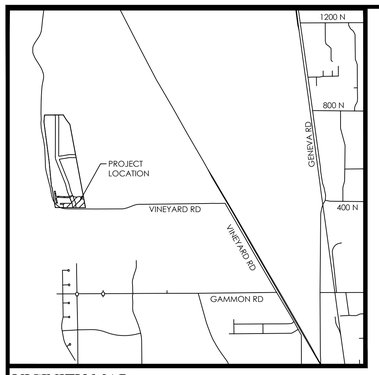

VICINITY MAP
N.T.S

LEGEND
- BOUNDARY
- SECTION LINE
- EASEMENT
- RIGHT-OF-WAY LINE
- BUILDING SETBACK
- EXISTING PROPERTY LINE
- #5 REBAR AND CAP (FOCUS ENG.) TO BE SET
- SECTION MONUMENT (FOUND)
- LIMITS OF COMMON AREA & PUE
- LIMITS OF PRIVATE OWNERSHIP
- LIMITS OF LIMITED COMMON AREA & PUE

Line Table		
LINE	DIRECTION	LENGTH
L1	S43°33'13"W	14.57
L2	N67°27'52"W	13.61

GRAPHIC SCALE
20 0 10 20 40 80
(IN FEET)
1 inch = 20 ft.

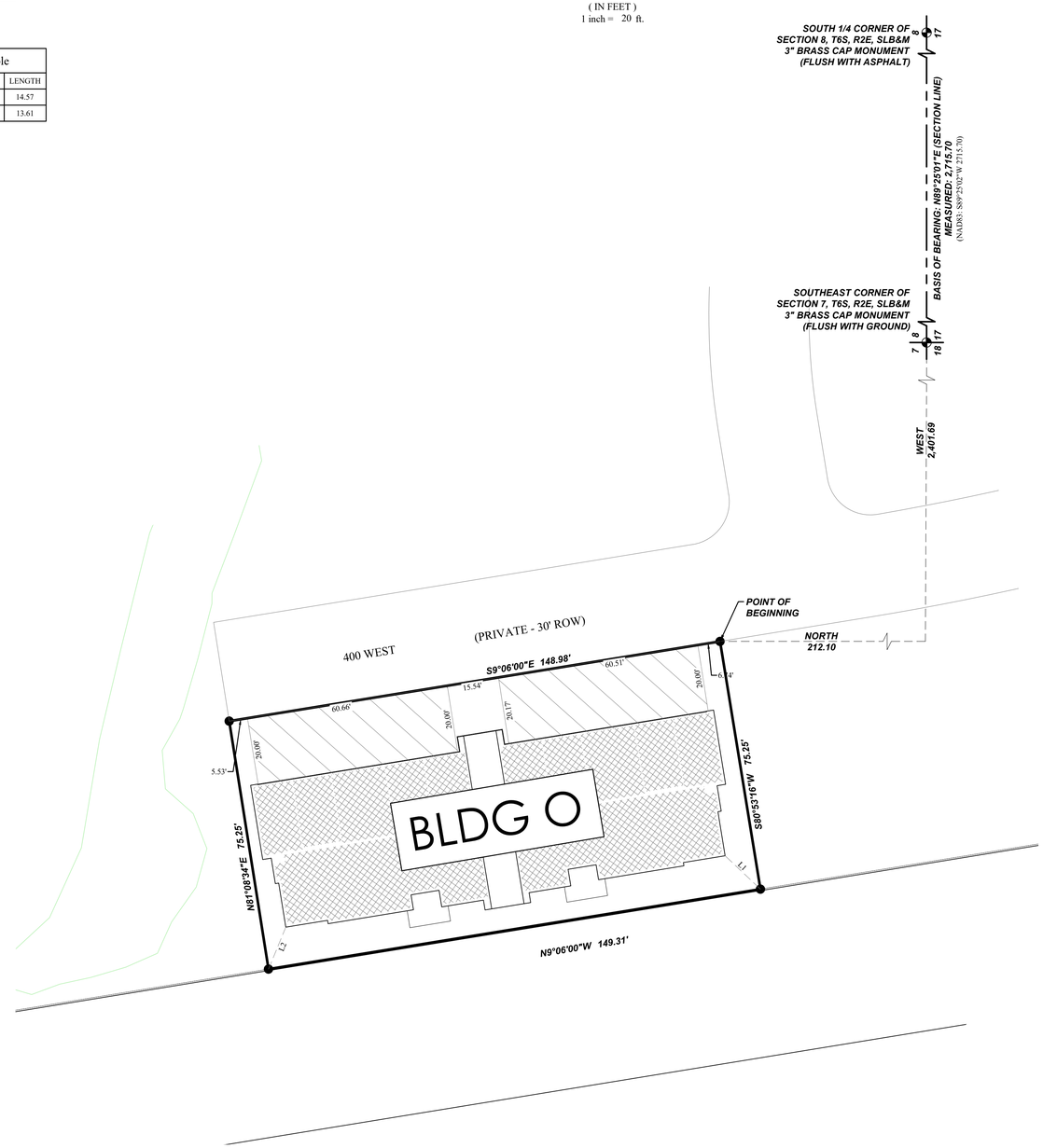

NOTES
1. #5 X 24" REBAR & CAP (FOCUS ENG) TO BE SET AT ALL LOT CORNERS. NAILS OR PLUGS TO BE SET IN TOP BACK OF CURB AT EXTENSION OF SIDE LOT LINES, IN LIEU OF REBAR AND CAPS AT FRONT LOT CORNERS.
2. ALL PUBLIC UTILITY EASEMENTS PLATTED HEREON ARE IN PERPETUITY FOR INSTALLATION, MAINTENANCE, REPAIR AND REPLACEMENT OF PUBLIC UTILITIES, SIDEWALKS AND APPURTENANT PARTS THEREOF AND THE RIGHT TO REASONABLE ACCESS TO GRANTOR'S PROPERTY FOR THE ABOVE DESCRIBED PURPOSES. THE EASEMENT SHALL RUN WITH THE REAL PROPERTY AND SHALL BE BINDING UPON THE GRANTOR AND THE GRANTOR'S SUCCESSORS, HEIRS, AND ASSIGNS.
3. ALL COMMON AREAS AND STREETS OR DRIVES TO SERVE AS PUBLIC UTILITY EASEMENTS.
4. ALL AREAS ARE COMMON AREAS AND FACILITIES EXCEPT AS OTHERWISE SPECIFICALLY DESIGNATED.
5. PLAT MUST BE RECORDED WITHIN 12 MONTHS OF FINAL PLAT APPROVAL, OR FOR PHASED DEVELOPMENTS, WITHIN 24 MONTHS OF RECORDATION OF MOST RECENT PHASE. THE FIRST FINAL PLAT APPROVAL WAS GRANTED ON THE ____ DAY OF ____, 20 __.
6. THE INSTALLATION OF IMPROVEMENTS SHALL CONFORM TO ALL CITY STANDARDS, RESOLUTIONS AND ORDINANCES.
7. BUILDING PERMITS WILL NOT BE ISSUED UNTIL ALL IMPROVEMENTS HAVE BEEN INSTALLED AND ACCEPTED BY THE CITY IN WRITING OR BONDED FOR.
8. BUILDING PERMITS WILL NOT BE ISSUED UNTIL ALL IMPACT AND CONNECTION FEES ARE PAID IN FULL PER CITY REGULATIONS IN EFFECT AT THE TIME OF BUILDING PERMIT ISSUANCE.
9. NO CITY MAINTENANCE SHALL BE PROVIDED FOR STREETS DESIGNATED AS "PRIVATE" ON THIS PLAT.
10. DRIVEWAYS AND LOT ACCESS SHALL BE LIMITED TO INTERIOR LOCAL SUBDIVISION STREETS ONLY.
11. DRAINAGE SHALL NOT CROSS PROPERTY LINES. EXCESS OR CONCENTRATED DRAINAGE SHALL BE CONTAINED ON SITE OR DIRECTED TO AN APPROVED DRAINAGE FACILITY.
12. VINEYARD ACCEPTS NO RESPONSIBILITY FOR ANY PROPERTY DAMAGE CAUSED BY GROUND WATER FLOODING.
13. ALL BUILDINGS AND DEVELOPMENT SHALL BE IN CONFORMANCE WITH THE VINEYARD ZONING ORDINANCE.
14. VINEYARD TOWN CENTER MASTER ASSOCIATION,
13702 S. 200 W., DRAPER , UT. 84020

ROCKY MOUNTAIN POWER
1. PURSUANT TO UTAH CODE ANN. 54-3-27 THIS PLAT CONVEYS TO THE OWNER(S) OR OPERATORS OF UTILITY FACILITIES A PUBLIC UTILITY EASEMENT ALONG WITH ALL THE RIGHTS AND DUTIES DESCRIBED THEREIN.
2. PURSUANT TO UTAH CODE ANN. 17-27a-603(4)(c)(ii) ROCKY MOUNTAIN POWER ACCEPTS DELIVERY OF THE PUE AS DESCRIBED IN THIS PLAT AND APPROVES THIS PLAT SOLELY FOR THE PURPOSE OF CONFIRMING THAT THE PLAT CONTAINS PUBLIC UTILITY EASEMENTS AND APPROXIMATES THE LOCATION OF THE PUBLIC UTILITY EASEMENTS, BUT DOES NOT WARRANT THEIR PRECISE LOCATION. ROCKY MOUNTAIN POWER MAY REQUIRE OTHER EASEMENTS IN ORDER TO SERVE THIS DEVELOPMENT. THIS APPROVAL DOES NOT AFFECT ANY RIGHT THAT ROCKY MOUNTAIN POWER HAS UNDER:
   a. A RECORDED EASEMENT OR RIGHT-OF-WAY
   b. THE LAW APPLICABLE TO PRESCRIPTIVE RIGHTS
   c. TITLE 54, CHAPTER 8a, DAMAGE TO UNDERGROUND UTILITY FACILITIES OR
   d. ANY OTHER PROVISION OF LAW

DOMINION ENERGY CORPORATION
DOMINION ENERGY CORPORATION APPROVES THIS PLAT SOLELY FOR THE PURPOSE OF CONFIRMING THAT THE PLAT CONTAINS PUBLIC UTILITY EASEMENTS. DOMINION ENERGY CORPORATION MAY REQUIRE OTHER EASEMENTS IN ORDER TO SERVE THIS DEVELOPMENT. THIS APPROVAL DOES NOT CONSTITUTE ABROGATION OR WAIVER OF ANY OTHER EXISTING RIGHTS, OBLIGATIONS OR LIABILITIES PROVIDE BY LAW OR EQUITY. THIS APPROVAL DOES NOT CONSTITUTE ACCEPTANCE, APPROVAL OR ACKNOWLEDGEMENT OF ANY TERMS CONTAINED IN THE PLAT, INCLUDING THOSE SET FORTH IN THE OWNERS DEDICATION AND THE NOTES AND DOES NOT CONSTITUTE A GUARANTEE OF PARTICULAR TERMS OF NATURAL GAS SERVICE. FOR FURTHER INFORMATION PLEASE CONTACT DOMINION ENERGY CORPORATION'S
RIGHT-OF-WAY DEPARTMENT AT 800-366-8532.

SURVEYOR'S CERTIFICATE
KNOWN ALL MEN BY THESE PRESENTS: I, SPENCER W. LLEWELYN, DO HEREBY CERTIFY THAT I AM A PROFESSIONAL LAND SURVEYOR, AND THAT I HOLD CERTIFICATE NO. #10516507 AS PRESCRIBED UNDER THE LAWS OF THE STATE OF UTAH. I FURTHER CERTIFY THAT AT THE REQUEST OF THE OWNER OF THE BELOW DESCRIBED LAND, I PERFORMED A SURVEY OF SAID LAND, THAT THE DESCRIPTION BELOW CORRECTLY DESCRIBES THE LAND SURFACE UPON WHICH WILL BE CONSTRUCTED , AND THIS RECORD OF SURVEY MAP, CONSISTING OF THREE (3) PAGES IS ACCURATE AND COMPLIES WITH THE PROVISIONS OF SECTION 57-8-13 (1) OF THE UTAH CONDOMINIUM OWNERSHIP ACT. I FURTHER CERTIFY THAT THE REFERENCE MARKERS SHOWN ON THIS PLAT ARE LOCATED AS SHOWN AND ARE SUFFICIENT TO READILY RETRACE OR RE-ESTABLISH THIS SURVEY.

Spencer W. Llewelyn
Professional Land Surveyor
Certificate No. 10516507

Date

BOUNDARY DESCRIPTION
A portion of Lot 4, GENEVA PARK WEST, according to the Official Plat thereof recorded March 14, 2013 as Entry No. 24721:2013 in the Office of the Utah County Recorder, located in the South Half of Section 7, Township 6 South, Range 2 East, Salt Lake Base & Meridian, in Vineyard, Utah, more particularly described as follows:

Beginning at a point located West 2,401.69 feet and North 212.10 feet from the Southeast Corner of Section 7, T6S, R2E, SLB&M (Basis of Bearing: S89°25'01"W along the Section line from the South 1/4 Corner of Section 8 to the Southeast Corner of Section 7, T6S, R2E, SLB&M); thence S80°53'16"W 75.25 feet to the West line of Lot 4, GENEVA PARK WEST, according to the Official Plat thereof recorded March 14, 2013 as Entry No. 24721:2013 in the Office of the Utah County Recorder; thence N09°06'00"W along said West line 149.31 feet; thence N81°08'34"E 75.25 feet; thence S09°06'00"E 148.98 feet to the point of beginning.

Contains: 11,223 square feet or 0.26 acres+/-

OWNER'S DEDICATION
KNOW ALL MEN BY THESE PRESENT THAT WE, ALL OF THE UNDERSIGNED OWNERS OF ALL OF THE TRACT OF LAND DESCRIBED HEREWITH AS

LAKEFRONT @ VINEYARD TOWN CENTER
PHASE 1E, PLAT O
CONDOMINIUMS

A UTAH CONDOMINIUM PROJECT LOCATED ON SAID TRACT OF LAND, HAVING CAUSED A SURVEY TO BE MADE AND THIS RECORD OF SURVEY MAP TO BE PREPARED. DO HEREBY GIVE OUR CONSENT TO THE RECORDATION OF THIS RECORD OF SURVEY MAP AND SUBMIT THIS PROPERTY TO THE UTAH CONDOMINIUM OWNERSHIP ACT.
FURTHERMORE, WE DO HEREBY CONVEY TO ALL PUBLIC UTILITY AGENCIES, THEIR SUCCESSORS AND ASSIGNS, PERMANENT EASEMENTS AS SHOWN BY THE AREA MARKED "UTILITY EASEMENT" ON THE WITHIN PLAT FOR THE CONSTRUCTION AND MAINTENANCE OF ELECTRICAL, TELEPHONE, NATURAL GAS, SEWER AND WATER LINES AND APPURTENANCES, TOGETHER WITH THE RIGHT OF ACCESS THERETO

IN WITNESS WHEREOF, WE HAVE HEREUNTO SET OUR HANDS THIS _____ DAY OF _____ A.D. 20____

EDGE VINEYARD SHORES, LLC
STEVE MADDOX, MANAGER

LIMITED LIABILITY ACKNOWLEDGMENT
STATE OF UTAH
S.S.
COUNTY OF _____

ON THE ____ DAY OF _____ A.D. 20 ____ PERSONALLY APPEARED BEFORE ME , THE UNDERSIGNED NOTARY PUBLIC, IN AND FOR THE COUNTY OF _____, IN SAID STATE OF UTAH, _____, WHO AFTER BEING DULY SWORN, ACKNOWLEDGED TO ME THAT HE/SHE IS THE _____ OF _____ L.L.C., A UTAH L.L.C. AND THAT HE/SHE SIGNED THE OWNER'S DEDICATION FREELY AND VOLUNTARILY FOR AND IN BEHALF OF SAID LIMITED LIABILITY COMPANY FOR THE PURPOSES THEREIN MENTIONED.

MY COMMISSION EXPIRES:_____

A NOTARY PUBLIC COMMISSIONED IN UTAH RESIDING IN _____ COUNTY

MY COMMISSION No._____

PRINTED FULL NAME OF NOTARY

ACCEPTANCE BY LEGISLATIVE BODY
THE LEGISLATIVE BODY OF VINEYARD CITY OF UTAH COUNTY, APPROVES THIS SUBDIVISION AND HEREBY ACCEPTS THE DEDICATION OF ALL STREETS, EASEMENTS, AND OTHER PARCELS OF LAND INTENDED FOR PUBLIC PURPOSES FOR THE PERPETUAL USE OF THE PUBLIC THIS ____ DAY OF _____20___.

VINEYARD PLANNING COMMISSION CHAIR DATE: ____/____/_____	CITY ENGINEER DATE: ____/____/_____
CITY MANAGER DATE: ____/____/_____	CLERK/RECORDER DATE: ____/____/_____
CITY ATTORNEY DATE: ____/____/_____	

LAKEFRONT
@ VINEYARD TOWN CENTER
PHASE 1E, PLAT O
CONDOMINIUMS
(AMENDING PORTIONS OF LOT 4, GENEVA PARK WEST SUBDIVISION)
PORTIONS OF SECTION 7, T6S, R2E,
SALT LAKE BASE & MERIDIAN
VINEYARD CITY, UTAH COUNTY, UTAH

1 OF 2	07/09/20	SCALE: 1" = 20'	SURVEYOR'S SEAL	CLERK - RECORDER SEAL		

PREPARED FOR
EDGE HOMES
13702 SOUTH 200 WEST, SUITE B12
DRAPER, UTAH 84020
PH: 801-494-0150

FOCUS©
ENGINEERING AND SURVEYING, LLC
6949 SOUTH HIGH TECH DRIVE SUITE 200
MIDVALE, UT 84047 PH: (801) 352-0075
www.focusutah.com

Z:_2020\20-0169 Lakefront at Vineyard Town Center South Redesign\design 20-0169\dwg\sheets\FINAL PLATS\PHASE 1E\V22.0 Final Plat Phase 1E BLDG O.dwg

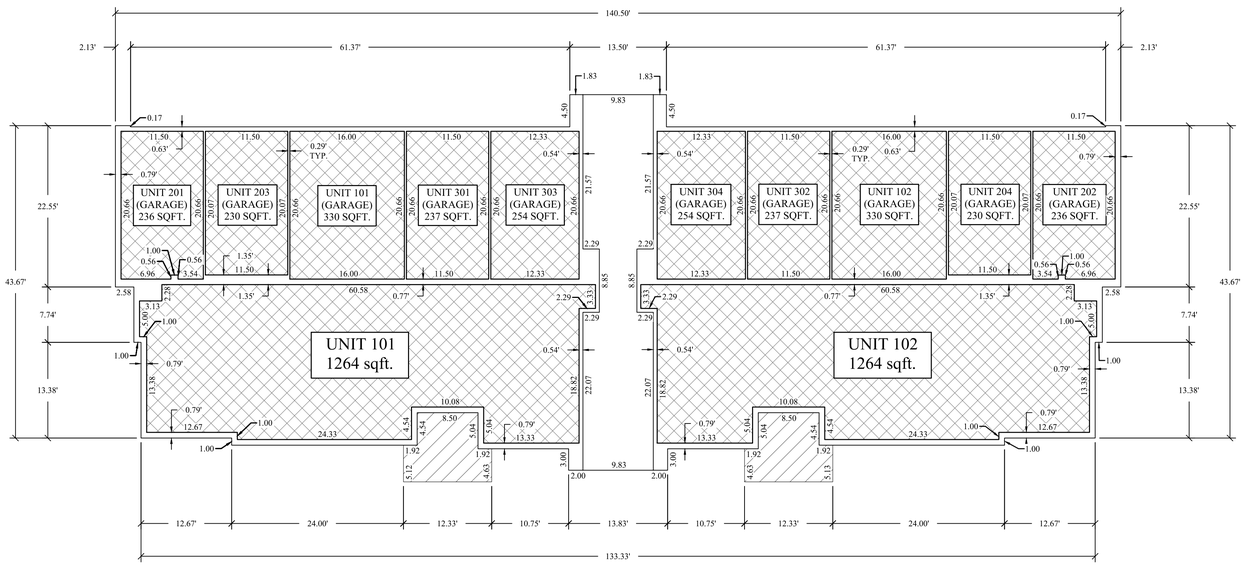

MAIN FLOOR
(BOTH UNITS ARE ADA)

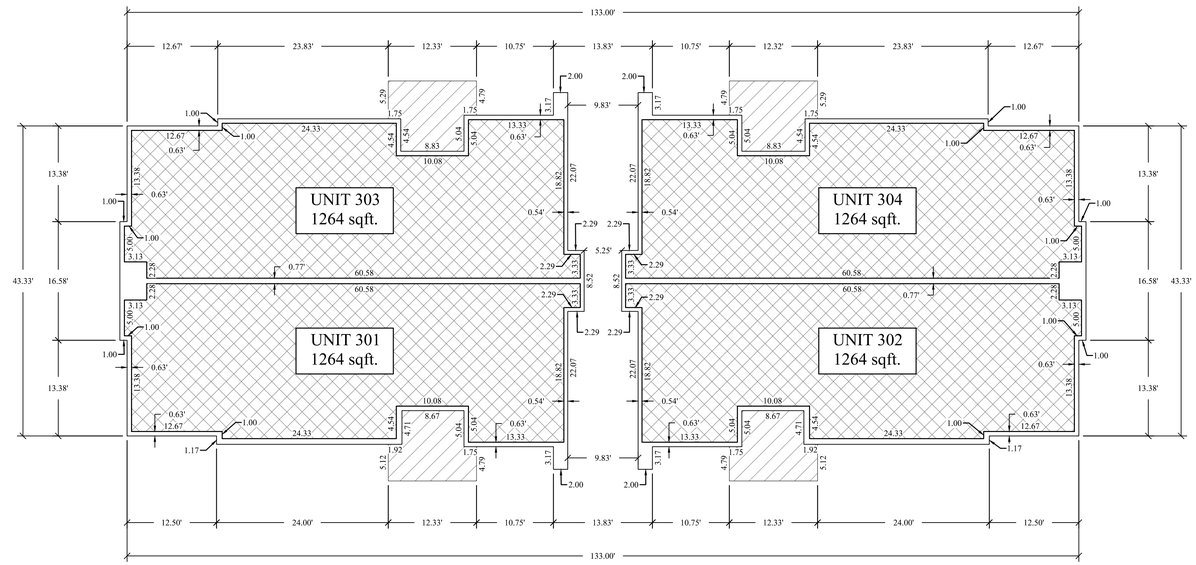

THIRD FLOOR

CONDOMINIUM DETAILS
BLDG. O

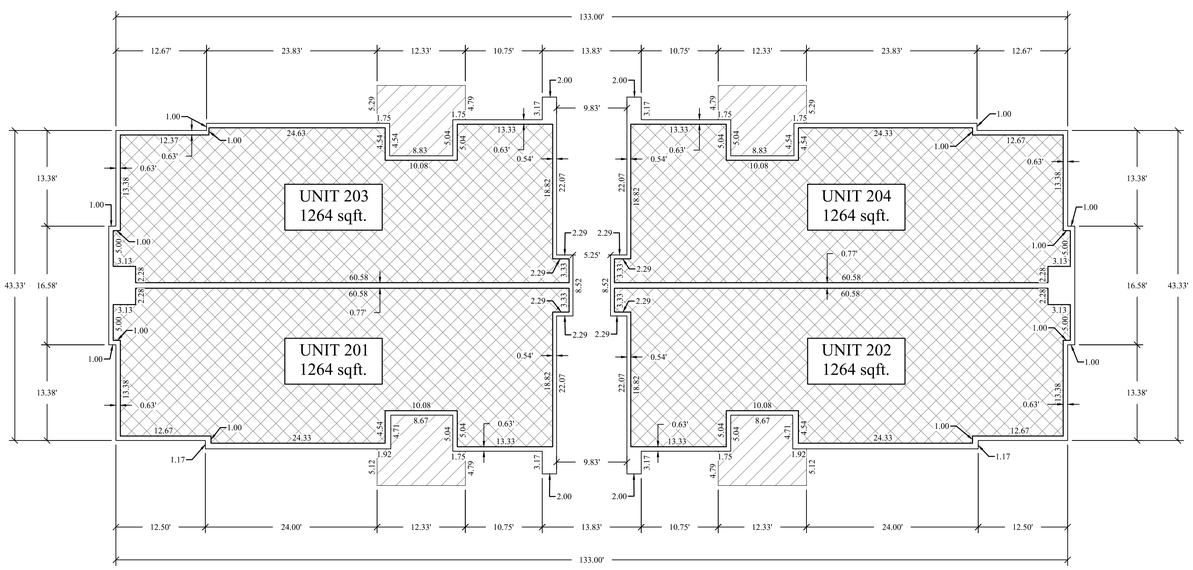

SECOND FLOOR

NOTES

1. ALL BUILDING WALLS ARE PARALLEL AND PERPENDICULAR TO REFERENCE BEARING SHOWN ON PLATS.

2. ALL AREAS ARE COMMON AREAS AND FACILITIES EXCEPT AS OTHERWISE SPECIFICALLY DESIGNATED.

ADDRESS TABLE

BUILDING NO.	UNIT NO.	ADDRESS
O	101	
O	102	
O	201	
O	202	
O	203	
O	204	
O	301	
O	302	
O	303	
O	304	

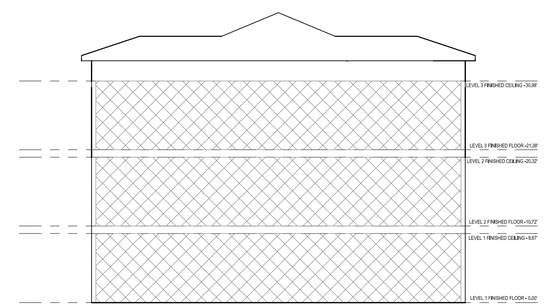

LIMITS OF COMMON AREA & PUE

LIMITS OF PRIVATE OWNERSHIP

LIMITS OF LIMITED COMMON AREA & PUE

GRAPHIC SCALE

10 0 5 10 20 40

(IN FEET)
1 inch = 10 ft.

LAKEFRONT @ VINEYARD TOWN CENTER

PHASE 1E, PLAT O CONDOMINIUMS

(AMENDING PORTIONS OF LOT 4, GENEVA PARK WEST SUBDIVISION)
PORTIONS OF SECTION 7, T6S, R2E,
SALT LAKE BASE & MERIDIAN
VINEYARD CITY, UTAH COUNTY, UTAH

2 OF 2	07/09/2020	SCALE: 1" = 10'

PREPARED FOR
EDGE HOMES
13702 SOUTH 200 WEST, SUITE B12
DRAPER, UTAH 84020
PH: 801-494-0150

FOCUS©
ENGINEERING AND SURVEYING, LLC
6949 SOUTH HIGH TECH DRIVE SUITE 200
MIDVALE, UT 84047 PH: (801) 352-0075
www.focusutah.com

SURVEYOR'S SEAL	CLERK - RECORDER SEAL		

Z:_2020\20-0169 Lakefront at Vineyard Town Center South Redesign\design 20-0169\dwg\sheets\FINAL PLATS\PHASE 1E\C2.1 Final Plat Phase 1E BLDG O.dwg

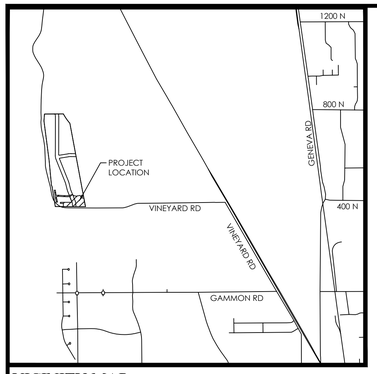

VICINITY MAP

N.T.S

LEGEND

- BOUNDARY
- SECTION LINE
- EASEMENT
- RIGHT-OF-WAY LINE
- BUILDING SETBACK
- EXISTING PROPERTY LINE
- #5 REBAR AND CAP (FOCUS ENG.) TO BE SET
- SECTION MONUMENT (FOUND)
- LIMITS OF COMMON AREA & PUE
- LIMITS OF PRIVATE OWNERSHIP
- LIMITS OF LIMITED COMMON AREA & PUE

LAKEFRONT @ VINEYARD TOWN CENTER

PHASE 1E, PLAT OO

CONDOMINIUMS

(AMENDING PORTIONS OF LOT 4, GENEVA PARK WEST SUBDIVISION)

PORTIONS OF SECTION 7, T6S, R2E,
SALT LAKE BASE & MERIDIAN
VINEYARD CITY, UTAH COUNTY, UTAH

GRAPHIC SCALE

20 0 10 20 40 80

(IN FEET)
1 inch = 20 ft.

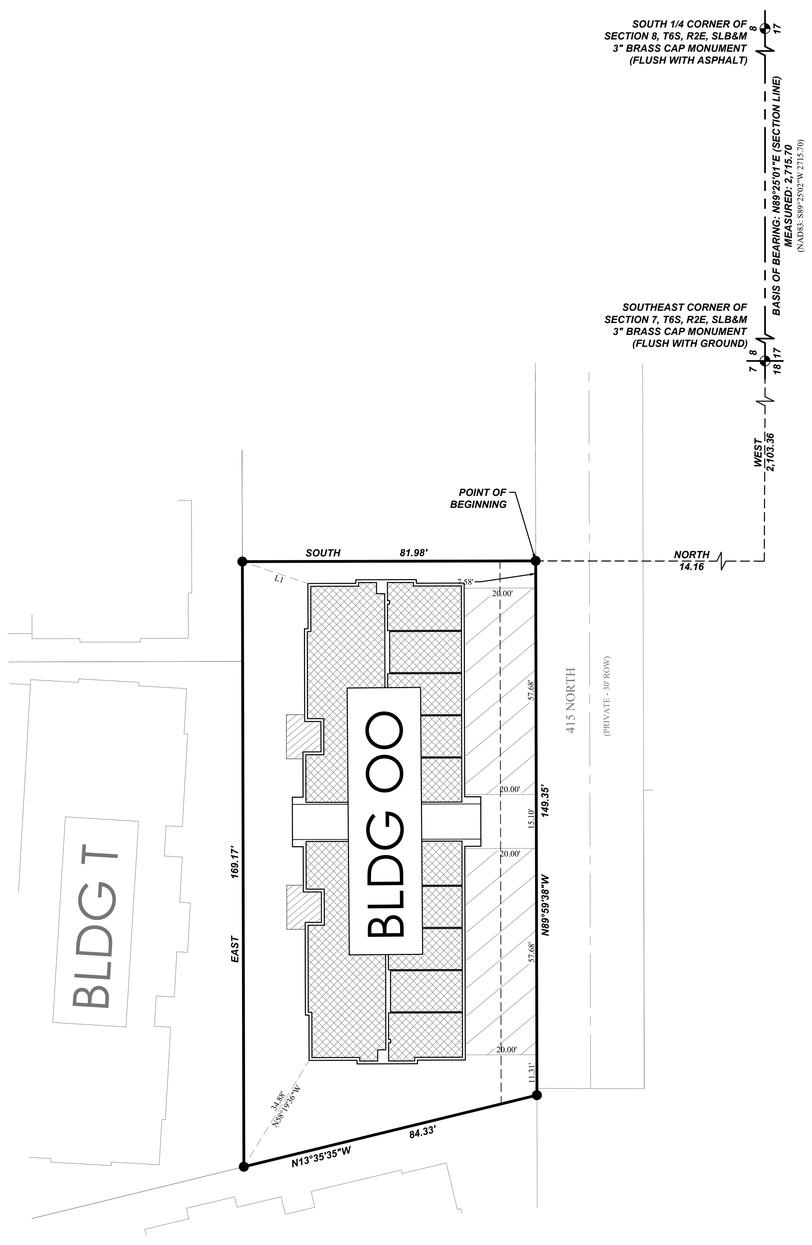

SURVEYOR'S CERTIFICATE

KNOWN ALL MEN BY THESE PRESENTS: I, SPENCER W. LLEWELYN, DO HEREBY CERTIFY THAT I AM A PROFESSIONAL LAND SURVEYOR, AND THAT I HOLD CERTIFICATE NO. #10516507 AS PRESCRIBED UNDER THE LAWS OF THE STATE OF UTAH. I FURTHER CERTIFY THAT AT THE REQUEST OF THE OWNER OF THE BELOW DESCRIBED LAND, I PERFORMED A SURVEY OF SAID LAND, THAT THE DESCRIPTION BELOW CORRECTLY DESCRIBES THE LAND SURFACE UPON WHICH WILL BE CONSTRUCTED , AND THIS RECORD OF SURVEY MAP, CONSISTING OF THREE (3) PAGES IS ACCURATE AND COMPLIES WITH THE PROVISIONS OF SECTION 57-8-13 (1) OF THE UTAH CONDOMINIUM OWNERSHIP ACT. I FURTHER CERTIFY THAT THE REFERENCE MARKERS SHOWN ON THIS PLAT ARE LOCATED AS SHOWN AND ARE SUFFICIENT TO READILY RETRACE OR RE-ESTABLISH THIS SURVEY.

Spencer W. Llewelyn
Professional Land Surveyor
Certificate No. 10516507

Date

BOUNDARY DESCRIPTION

A portion of Lot 4, GENEVA PARK WEST, according to the Official Plat thereof recorded March 14, 2013 as Entry No. 24721:2013 in the Office of the Utah County Recorder, located in the South Half of Section 7, Township 6 South, Range 2 East, Salt Lake Base & Meridian, in Vineyard, Utah, more particularly described as follows:

Beginning at a point located West 2,103.36 feet and North 14.16 feet from the Southeast Corner of Section 7, T6S, R2E, SLB&M (Basis of Bearing: S89°25'01"W along the Section line from the South 1/4 Corner of Section 8 to the Southeast Corner of Section 7, T6S, R2E, SLB&M); thence N89°59'38"W 149.35 feet; thence N13°35'35"W 84.33 feet; thence East 169.17 feet; thence South 81.98 feet to the point of beginning.

Contains: 13,055 square feet or 0.30 acres+/-

OWNER'S DEDICATION

KNOW ALL MEN BY THESE PRESENT THAT WE, ALL OF THE UNDERSIGNED OWNERS OF ALL OF THE TRACT OF LAND DESCRIBED HEREWITH AS

LAKEFRONT @ VINEYARD TOWN CENTER
PHASE 1E, PLAT OO
CONDOMINIUMS

A UTAH CONDOMINIUM PROJECT LOCATED ON SAID TRACT OF LAND, HAVING CAUSED A SURVEY TO BE MADE AND THIS RECORD OF SURVEY MAP TO BE PREPARED, DO HEREBY GIVE OUR CONSENT TO THE RECORDATION OF THIS RECORD OF SURVEY MAP AND SUBMIT THIS PROPERTY TO THE UTAH CONDOMINIUM OWNERSHIP ACT.
FURTHERMORE, WE DO HEREBY CONVEY TO ALL PUBLIC UTILITY AGENCIES, THEIR SUCCESSORS AND ASSIGNS, PERMANENT EASEMENTS AS SHOWN BY THE AREA MARKED "UTILITY EASEMENT" ON THE WITHIN PLAT FOR THE CONSTRUCTION AND MAINTENANCE OF ELECTRICAL, TELEPHONE, NATURAL GAS, SEWER AND WATER LINES AND APPURTENANCES, TOGETHER WITH THE RIGHT OF ACCESS THERETO

IN WITNESS WHEREOF, WE HAVE HEREUNTO SET OUR HANDS THIS _____ DAY OF _____ A.D. 20____

EDGE VINEYARD SHORES, LLC
STEVE MADDOX, MANAGER

LIMITED LIABILITY ACKNOWLEDGMENT

STATE OF UTAH
S.S.
COUNTY OF _____

ON THE ____ DAY OF _____ A.D. 20____ PERSONALLY APPEARED BEFORE ME , THE UNDERSIGNED NOTARY PUBLIC, IN AND FOR THE COUNTY OF _____, IN SAID STATE OF UTAH, _____, WHO AFTER BEING DULY SWORN, ACKNOWLEDGED TO ME THAT HE/SHE IS THE _____ OF _____ L.L.C., A UTAH L.L.C. AND THAT HE/SHE SIGNED THE OWNER'S DEDICATION FREELY AND VOLUNTARILY FOR AND IN BEHALF OF SAID LIMITED LIABILITY COMPANY FOR THE PURPOSES THEREIN MENTIONED.

MY COMMISSION EXPIRES:_____

A NOTARY PUBLIC COMMISSIONED IN UTAH RESIDING IN _____ COUNTY

MY COMMISSION No._____

PRINTED FULL NAME OF NOTARY

ACCEPTANCE BY LEGISLATIVE BODY

THE LEGISLATIVE BODY OF VINEYARD CITY OF UTAH COUNTY, APPROVES THIS SUBDIVISION AND HEREBY ACCEPTS THE DEDICATION OF ALL STREETS, EASEMENTS, AND OTHER PARCELS OF LAND INTENDED FOR PUBLIC PURPOSES FOR THE PERPETUAL USE OF THE PUBLIC THIS ____ DAY OF _____ 20___.

VINEYARD PLANNING COMMISSION CHAIR DATE: ___/___/_____	CITY ENGINEER DATE: ___/___/_____
CITY MANAGER DATE: ___/___/_____	CLERK/RECORDER DATE: ___/___/_____
CITY ATTORNEY DATE: ___/___/_____	

LAKEFRONT
@ VINEYARD TOWN CENTER
PHASE 1E, PLAT OO
CONDOMINIUMS
(AMENDING PORTIONS OF LOT 4, GENEVA PARK WEST SUBDIVISION)
PORTIONS OF SECTION 7, T6S, R2E,
SALT LAKE BASE & MERIDIAN
VINEYARD CITY, UTAH COUNTY, UTAH

NOTES

1. #5 X 24" REBAR & CAP (FOCUS ENG) TO BE SET AT ALL LOT CORNERS. NAILS OR PLUGS TO BE SET IN TOP BACK OF CURB AT EXTENSION OF SIDE LOT LINES, IN LIEU OF REBAR AND CAPS AT FRONT LOT CORNERS.
2. ALL PUBLIC UTILITY EASEMENTS PLATTED HEREON ARE IN PERPETUITY FOR INSTALLATION, MAINTENANCE, REPAIR AND REPLACEMENT OF PUBLIC UTILITIES, SIDEWALKS AND APPURTENANT PARTS THEREOF AND THE RIGHT TO REASONABLE ACCESS TO GRANTOR'S PROPERTY FOR THE ABOVE DESCRIBED PURPOSES. THE EASEMENT SHALL RUN WITH THE REAL PROPERTY AND SHALL BE BINDING UPON THE GRANTOR AND THE GRANTOR'S SUCCESSORS, HEIRS, AND ASSIGNS.
3. ALL COMMON AREAS AND STREETS OR DRIVES TO SERVE AS PUBLIC UTILITY EASEMENTS.
4. ALL AREAS ARE COMMON AREAS AND FACILITIES EXCEPT AS OTHERWISE SPECIFICALLY DESIGNATED.
5. PLAT MUST BE RECORDED WITHIN 12 MONTHS OF FINAL PLAT APPROVAL, OR FOR PHASED DEVELOPMENTS, WITHIN 24 MONTHS OF RECORDATION OF MOST RECENT PHASE. THE FIRST FINAL PLAT APPROVAL WAS GRANTED ON THE ____ DAY OF ____, 20 __.
6. THE INSTALLATION OF IMPROVEMENTS SHALL CONFORM TO ALL CITY STANDARDS, RESOLUTIONS AND ORDINANCES.
7. BUILDING PERMITS WILL NOT BE ISSUED UNTIL ALL IMPROVEMENTS HAVE BEEN INSTALLED AND ACCEPTED BY THE CITY IN WRITING OR BONDED FOR.
8. BUILDING PERMITS WILL NOT BE ISSUED UNTIL ALL IMPACT AND CONNECTION FEES ARE PAID IN FULL PER CITY REGULATIONS IN EFFECT AT THE TIME OF BUILDING PERMIT ISSUANCE.
9. NO CITY MAINTENANCE SHALL BE PROVIDED FOR STREETS DESIGNATED AS "PRIVATE" ON THIS PLAT.
10. DRIVEWAYS AND LOT ACCESS SHALL BE LIMITED TO INTERIOR LOCAL SUBDIVISION STREETS ONLY.
11. DRAINAGE SHALL NOT CROSS PROPERTY LINES. EXCESS OR CONCENTRATED DRAINAGE SHALL BE CONTAINED ON SITE OR DIRECTED TO AN APPROVED DRAINAGE FACILITY.
12. VINEYARD ACCEPTS NO RESPONSIBILITY FOR ANY PROPERTY DAMAGE CAUSED BY GROUND WATER FLOODING.
13. ALL BUILDINGS AND DEVELOPMENT SHALL BE IN CONFORMANCE WITH THE VINEYARD ZONING ORDINANCE.
14. VINEYARD TOWN CENTER MASTER ASSOCIATION,
    13702 S. 200 W., DRAPER , UT. 84020

ROCKY MOUNTAIN POWER

1. PURSUANT TO UTAH CODE ANN. 54-3-27 THIS PLAT CONVEYS TO THE OWNER(S) OR OPERATORS OF UTILITY FACILITIES A PUBLIC UTILITY EASEMENT ALONG WITH ALL THE RIGHTS AND DUTIES DESCRIBED THEREIN.
2. PURSUANT TO UTAH CODE ANN. 17-27a-603(4)(c)(ii) ROCKY MOUNTAIN POWER ACCEPTS DELIVERY OF THE PUE AS DESCRIBED IN THIS PLAT AND APPROVES THIS PLAT SOLELY FOR THE PURPOSE OF CONFIRMING THAT THE PLAT CONTAINS PUBLIC UTILITY EASEMENTS AND APPROXIMATES THE LOCATION OF THE PUBLIC UTILITY EASEMENTS, BUT DOES NOT WARRANT THEIR PRECISE LOCATION. ROCKY MOUNTAIN POWER MAY REQUIRE OTHER EASEMENTS IN ORDER TO SERVE THIS DEVELOPMENT. THIS APPROVAL DOES NOT AFFECT ANY RIGHT THAT ROCKY MOUNTAIN POWER HAS UNDER:
   a. A RECORDED EASEMENT OR RIGHT-OF-WAY
   b. THE LAW APPLICABLE TO PRESCRIPTIVE RIGHTS
   c. TITLE 54, CHAPTER 8a, DAMAGE TO UNDERGROUND UTILITY FACILITIES OR
   d. ANY OTHER PROVISION OF LAW

DOMINION ENERGY CORPORATION

DOMINION ENERGY CORPORATION APPROVES THIS PLAT SOLELY FOR THE PURPOSE OF CONFIRMING THAT THE PLAT CONTAINS PUBLIC UTILITY EASEMENTS. DOMINION ENERGY CORPORATION MAY REQUIRE OTHER EASEMENTS IN ORDER TO SERVE THIS DEVELOPMENT. THIS APPROVAL DOES NOT CONSTITUTE ABROGATION OR WAIVER OF ANY OTHER EXISTING RIGHTS, OBLIGATIONS OR LIABILITIES PROVIDE BY LAW OR EQUITY. THIS APPROVAL DOES NOT CONSTITUTE ACCEPTANCE, APPROVAL OR ACKNOWLEDGEMENT OF ANY TERMS CONTAINED IN THE PLAT, INCLUDING THOSE SET FORTH IN THE OWNERS DEDICATION AND THE NOTES AND DOES NOT CONSTITUTE A GUARANTEE OF PARTICULAR TERMS OF NATURAL GAS SERVICE. FOR FURTHER INFORMATION PLEASE CONTACT DOMINION ENERGY CORPORATION'S
RIGHT-OF-WAY DEPARTMENT AT 800-366-8532.

1 OF 2	07/09/20	SCALE: 1" = 20'

PREPARED FOR
EDGE HOMES
13702 SOUTH 200 WEST, SUITE B12
DRAPER, UTAH 84020
PH: 801-494-0150

FOCUS©
ENGINEERING AND SURVEYING, LLC
6949 SOUTH HIGH TECH DRIVE SUITE 200
MIDVALE, UT 84047 PH: (801) 352-0075
www.focusutah.com

SURVEYOR'S SEAL	CLERK - RECORDER SEAL		

Z:_2020\20-0169 Lakefront at Vineyard Town Center South Redesign\design 20-0169\dwg\sheets\FINAL PLATS\PHASE 1E\C2.0 Final Plat Phase 1E BLDG OO.dwg

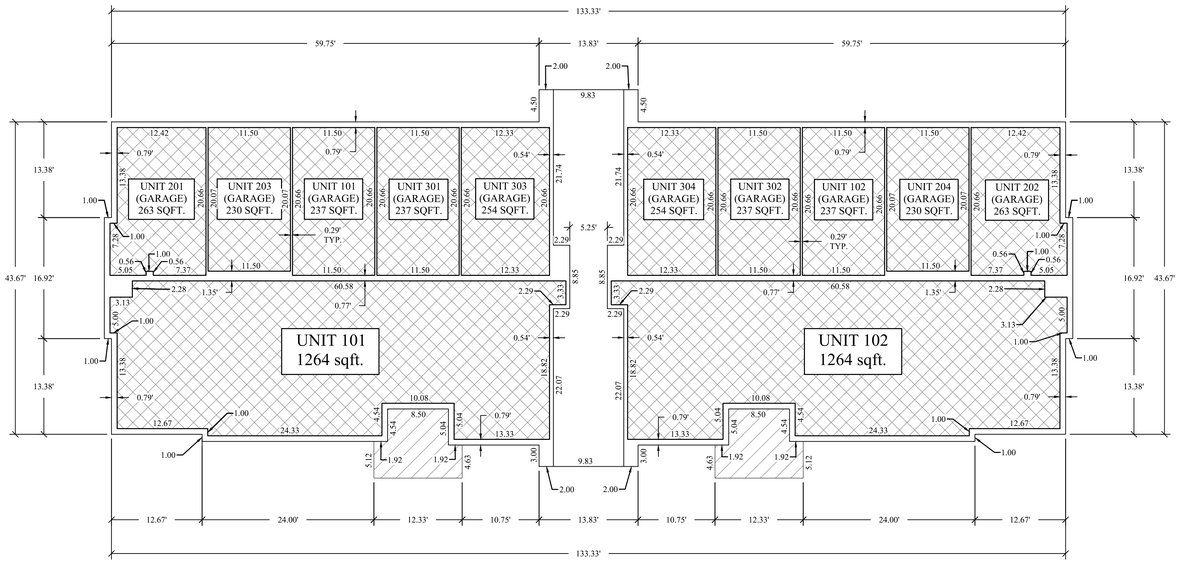

MAIN FLOOR

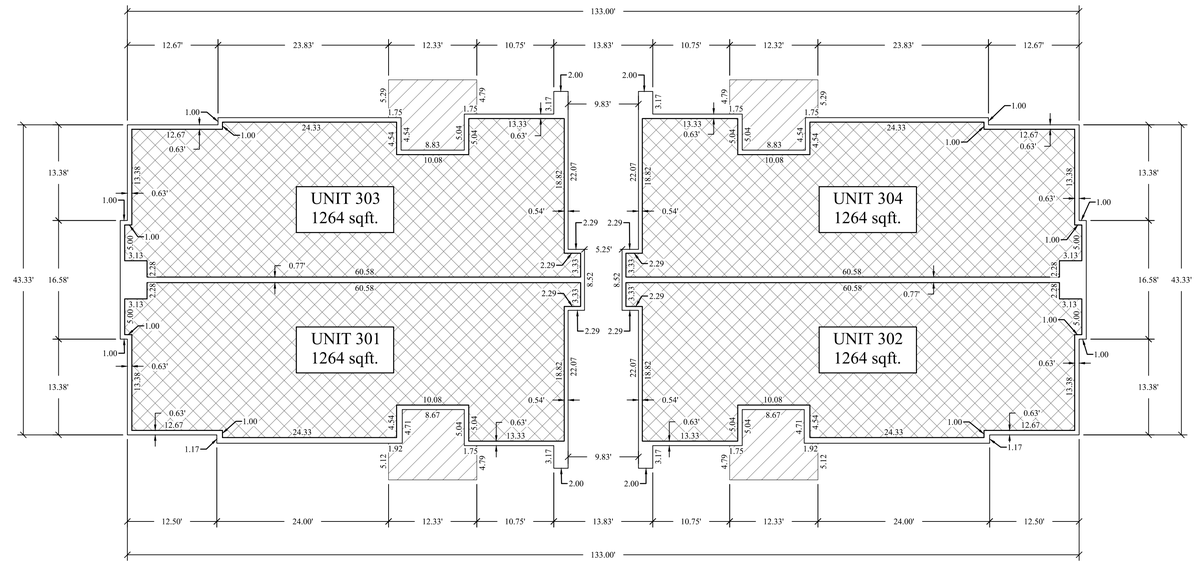

THIRD FLOOR

CONDOMINIUM DETAILS
BLDG. OO

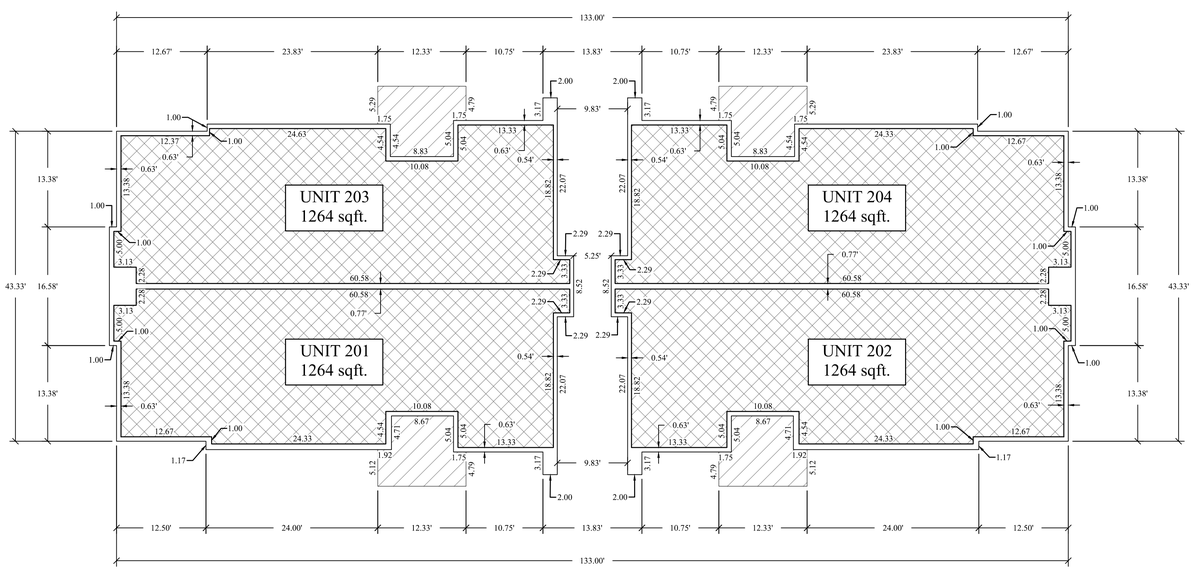

SECOND FLOOR

NOTES

1. ALL BUILDING WALLS ARE PARALLEL AND PERPENDICULAR TO REFERENCE BEARING SHOWN ON PLATS.

2. ALL AREAS ARE COMMON AREAS AND FACILITIES EXCEPT AS OTHERWISE SPECIFICALLY DESIGNATED.

ADDRESS TABLE

BUILDING NO.	UNIT NO.	ADDRESS
OO	101	
OO	102	
OO	201	
OO	202	
OO	203	
OO	204	
OO	301	
OO	302	
OO	303	
OO	304	

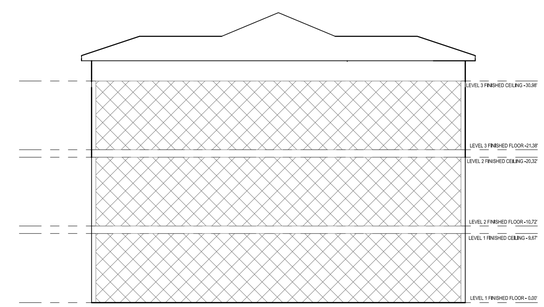

LIMITS OF COMMON AREA & PUE

LIMITS OF PRIVATE OWNERSHIP

LIMITS OF LIMITED COMMON AREA & PUE

GRAPHIC SCALE

10 0 5 10 20 40

(IN FEET)
1 inch = 10 ft.

LAKEFRONT @ VINEYARD TOWN CENTER

PHASE 1E, PLAT OO CONDOMINIUMS

(AMENDING PORTIONS OF LOT 4, GENEVA PARK WEST SUBDIVISION)
PORTIONS OF SECTION 7, T6S, R2E,
SALT LAKE BASE & MERIDIAN
VINEYARD CITY, UTAH COUNTY, UTAH

2 OF 2	07/09/2020	SCALE: 1" = 10'

PREPARED FOR
EDGE HOMES
13702 SOUTH 200 WEST, SUITE B12
DRAPER, UTAH 84020
PH: 801-494-0150

FOCUS©
ENGINEERING AND SURVEYING, LLC
6949 SOUTH HIGH TECH DRIVE SUITE 200
MIDVALE, UT 84047 PH: (801) 352-0075
www.focusutah.com

SURVEYOR'S SEAL	CLERK - RECORDER SEAL		

Z:_2020\20-0169 Lakefront at Vineyard Town Center South Redesign\design 20-0169\dwg\sheets\FINAL PLATS\PHASE 1E\C2.1 Final Plat Phase 1E BLDG OO.dwg

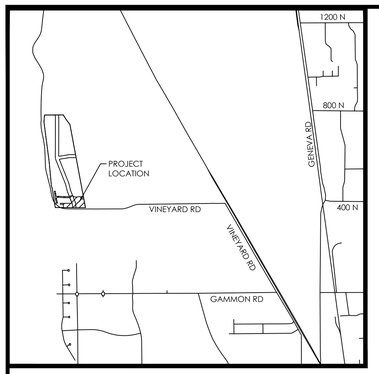

VICINITY MAP

N.T.S

LEGEND

- BOUNDARY
- SECTION LINE
- EASEMENT
- RIGHT-OF-WAY LINE
- BUILDING SETBACK
- EXISTING PROPERTY LINE
- #5 REBAR AND CAP (FOCUS ENG.) TO BE SET
- SECTION MONUMENT (FOUND)
- LIMITS OF COMMON AREA & PUE
- LIMITS OF PRIVATE OWNERSHIP
- LIMITS OF LIMITED COMMON AREA & PUE

LAKEFRONT
@ VINEYARD TOWN CENTER
PHASE 1E, PLAT PP
CONDOMINIUMS
(AMENDING PORTIONS OF LOT 4, GENEVA PARK WEST SUBDIVISION)

PORTIONS OF SECTION 7, T6S, R2E,
SALT LAKE BASE & MERIDIAN
VINEYARD CITY, UTAH COUNTY, UTAH

GRAPHIC SCALE

20 0 10 20 40 80

(IN FEET)
1 inch = 20 ft.

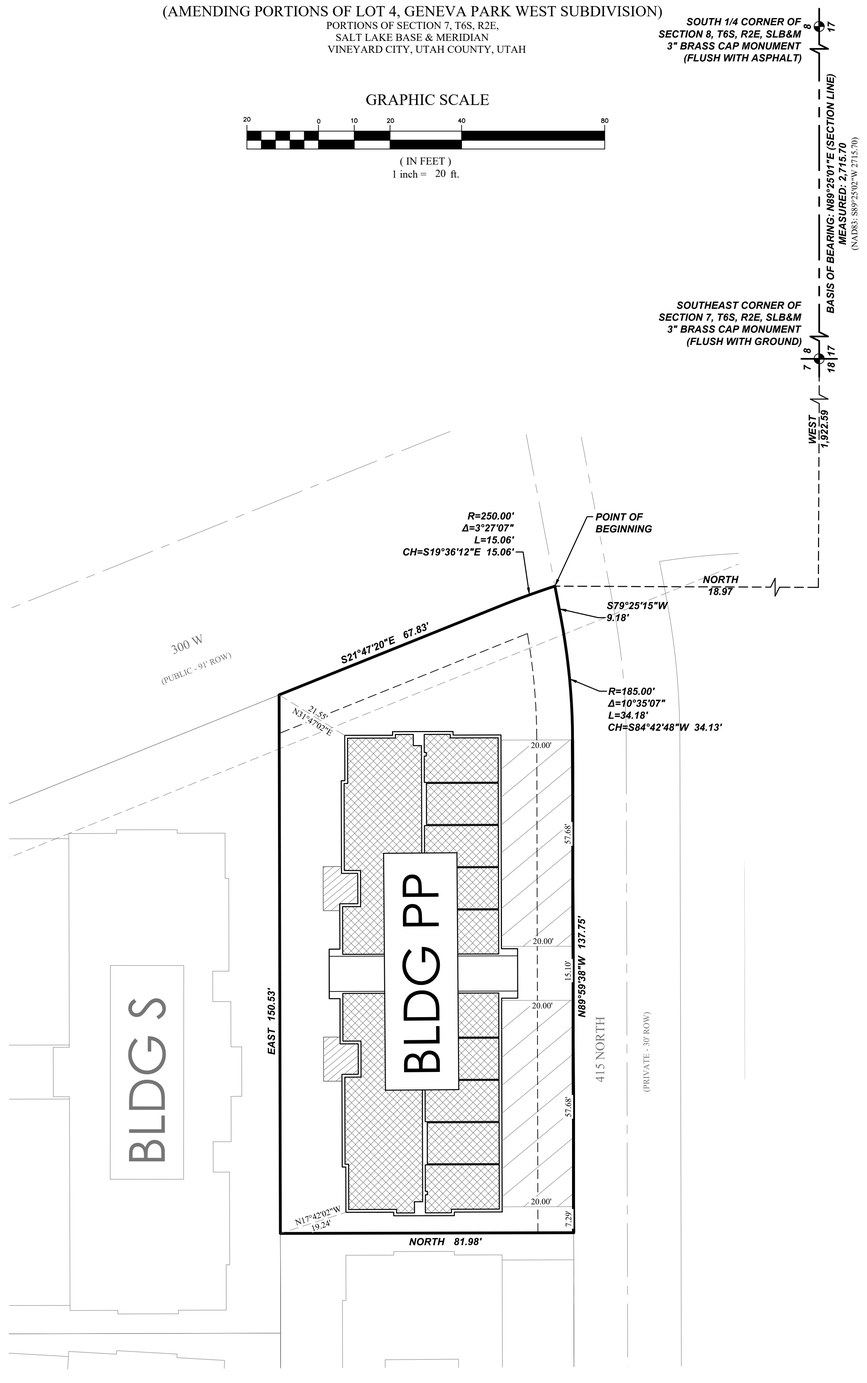

SURVEYOR'S CERTIFICATE

KNOWN ALL MEN BY THESE PRESENTS: I, SPENCER W. LLEWELYN, DO HEREBY CERTIFY THAT I AM A PROFESSIONAL LAND SURVEYOR, AND THAT I HOLD CERTIFICATE NO. #10516507 AS PRESCRIBED UNDER THE LAWS OF THE STATE OF UTAH. I FURTHER CERTIFY THAT AT THE REQUEST OF THE OWNER OF THE BELOW DESCRIBED LAND, I PERFORMED A SURVEY OF SAID LAND, THAT THE DESCRIPTION BELOW CORRECTLY DESCRIBES THE LAND SURFACE UPON WHICH WILL BE CONSTRUCTED , AND THIS RECORD OF SURVEY MAP, CONSISTING OF THREE (3) PAGES IS ACCURATE AND COMPLIES WITH THE PROVISIONS OF SECTION 57-8-13 (1) OF THE UTAH CONDOMINIUM OWNERSHIP ACT. I FURTHER CERTIFY THAT THE REFERENCE MARKERS SHOWN ON THIS PLAT ARE LOCATED AS SHOWN AND ARE SUFFICIENT TO READILY RETRACE OR RE-ESTABLISH THIS SURVEY.

Spencer W. Llewelyn
Professional Land Surveyor
Certificate No. 10516507

Date

BOUNDARY DESCRIPTION

A portion of Lot 4, GENEVA PARK WEST, according to the Official Plat thereof recorded March 14, 2013 as Entry No. 24721:2013 in the Office of the Utah County Recorder, located in the South Half of Section 7, Township 6 South, Range 2 East, Salt Lake Base & Meridian, in Vineyard, Utah, more particularly described as follows:

Beginning at a point located West 1,922.59 feet and North 18.97 feet from the Southeast Corner of Section 7, T6S, R2E, SLB&M (Basis of Bearing: S89°25'01"W along the Section line from the South 1/4 Corner of Section 8 to the Southeast Corner of Section 7, T6S, R2E, SLB&M); thence S79°25'15"W 9.18 feet; thence along the arc of a curve to the right with a radius of 185.00 feet a distance of 34.18 feet through a central angle of 10°35'07" Chord: S84°42'48"W 34.13 feet; thence N89°59'38"W 137.75 feet; thence North 81.98 feet; thence East 150.53 feet; thence S21°47'20"E 67.83 feet; thence along the arc of a curve to the right having a radius of 250.00 feet a distance of 15.06 feet through a central angle of 03°27'07" Chord: S19°36'12"E 15.06 feet to the point of beginning.

Contains: 13,604 square feet or 0.31 acres+/-

OWNER'S DEDICATION

KNOW ALL MEN BY THESE PRESENT THAT WE, ALL OF THE UNDERSIGNED OWNERS OF ALL OF THE TRACT OF LAND DESCRIBED HEREWITH AS

LAKEFRONT @ VINEYARD TOWN CENTER
PHASE 1E, PLAT PP
CONDOMINIUMS

A UTAH CONDOMINIUM PROJECT LOCATED ON SAID TRACT OF LAND, HAVING CAUSED A SURVEY TO BE MADE AND THIS RECORD OF SURVEY MAP TO BE PREPARED, DO HEREBY GIVE OUR CONSENT TO THE RECORDATION OF THIS RECORD OF SURVEY MAP AND SUBMIT THIS PROPERTY TO THE UTAH CONDOMINIUM OWNERSHIP ACT.
FURTHERMORE, WE DO HEREBY CONVEY TO ALL PUBLIC UTILITY AGENCIES, THEIR SUCCESSORS AND ASSIGNS, PERMANENT EASEMENTS AS SHOWN BY THE AREA MARKED "UTILITY EASEMENT" ON THE WITHIN PLAT FOR THE CONSTRUCTION AND MAINTENANCE OF ELECTRICAL, TELEPHONE, NATURAL GAS, SEWER AND WATER LINES AND APPURTENANCES, TOGETHER WITH THE RIGHT OF ACCESS THERETO

IN WITNESS WHEREOF, WE HAVE HEREUNTO SET OUR HANDS THIS _____ DAY OF _____ A.D. 20____

EDGE VINEYARD SHORES, LLC
STEVE MADDOX, MANAGER

LIMITED LIABILITY ACKNOWLEDGMENT

STATE OF UTAH
S.S.
COUNTY OF _____

ON THE ____ DAY OF _____ A.D. 20 ____ PERSONALLY APPEARED BEFORE ME , THE UNDERSIGNED NOTARY PUBLIC, IN AND FOR THE COUNTY OF _____ , IN SAID STATE OF UTAH, _____, WHO AFTER BEING DULY SWORN, ACKNOWLEDGED TO ME THAT HE/SHE IS THE _____ OF _____ L.L.C., A UTAH L.L.C. AND THAT HE/SHE SIGNED THE OWNER'S DEDICATION FREELY AND VOLUNTARILY FOR AND IN BEHALF OF SAID LIMITED LIABILITY COMPANY FOR THE PURPOSES THEREIN MENTIONED.

MY COMMISSION EXPIRES:_____

A NOTARY PUBLIC COMMISSIONED IN UTAH RESIDING IN _____ COUNTY

MY COMMISSION No._____

PRINTED FULL NAME OF NOTARY

ACCEPTANCE BY LEGISLATIVE BODY

THE LEGISLATIVE BODY OF VINEYARD CITY OF UTAH COUNTY, APPROVES THIS SUBDIVISION AND HEREBY ACCEPTS THE DEDICATION OF ALL STREETS, EASEMENTS, AND OTHER PARCELS OF LAND INTENDED FOR PUBLIC PURPOSES FOR THE PERPETUAL USE OF THE PUBLIC THIS ____ DAY OF _____ 20___.

VINEYARD PLANNING COMMISSION CHAIR DATE: ___/___/_____	CITY ENGINEER DATE: ___/___/_____
CITY MANAGER DATE: ___/___/_____	CLERK/RECORDER DATE: ___/___/_____
CITY ATTORNEY DATE: ___/___/_____	

LAKEFRONT
@ VINEYARD TOWN CENTER
PHASE 1E, PLAT PP
CONDOMINIUMS
(AMENDING PORTIONS OF LOT 4, GENEVA PARK WEST SUBDIVISION)
PORTIONS OF SECTION 7, T6S, R2E,
SALT LAKE BASE & MERIDIAN
VINEYARD CITY, UTAH COUNTY, UTAH

NOTES

1. #5 X 24" REBAR & CAP (FOCUS ENG) TO BE SET AT ALL LOT CORNERS. NAILS OR PLUGS TO BE SET IN TOP BACK OF CURB AT EXTENSION OF SIDE LOT LINES, IN LIEU OF REBAR AND CAPS AT FRONT LOT CORNERS.
2. ALL PUBLIC UTILITY EASEMENTS PLATTED HEREON ARE IN PERPETUITY FOR INSTALLATION, MAINTENANCE, REPAIR AND REPLACEMENT OF PUBLIC UTILITIES, SIDEWALKS AND APPURTENANT PARTS THEREOF AND THE RIGHT TO REASONABLE ACCESS TO GRANTOR'S PROPERTY FOR THE ABOVE DESCRIBED PURPOSES. THE EASEMENT SHALL RUN WITH THE REAL PROPERTY AND SHALL BE BINDING UPON THE GRANTOR AND THE GRANTOR'S SUCCESSORS, HEIRS, AND ASSIGNS.
3. ALL COMMON AREAS AND STREETS OR DRIVES TO SERVE AS PUBLIC UTILITY EASEMENTS.
4. ALL AREAS ARE COMMON AREAS AND FACILITIES EXCEPT AS OTHERWISE SPECIFICALLY DESIGNATED.
5. PLAT MUST BE RECORDED WITHIN 12 MONTHS OF FINAL PLAT APPROVAL, OR FOR PHASED DEVELOPMENTS, WITHIN 24 MONTHS OF RECORDATION OF MOST RECENT PHASE. THE FIRST FINAL PLAT APPROVAL WAS GRANTED ON THE ____ DAY OF ____, 20 _.
6. THE INSTALLATION OF IMPROVEMENTS SHALL CONFORM TO ALL CITY STANDARDS, RESOLUTIONS AND ORDINANCES.
7. BUILDING PERMITS WILL NOT BE ISSUED UNTIL ALL IMPROVEMENTS HAVE BEEN INSTALLED AND ACCEPTED BY THE CITY IN WRITING OR BONDED FOR.
8. BUILDING PERMITS WILL NOT BE ISSUED UNTIL ALL IMPACT AND CONNECTION FEES ARE PAID IN FULL PER CITY REGULATIONS IN EFFECT AT THE TIME OF BUILDING PERMIT ISSUANCE.
9. NO CITY MAINTENANCE SHALL BE PROVIDED FOR STREETS DESIGNATED AS "PRIVATE" ON THIS PLAT.
10. DRIVEWAYS AND LOT ACCESS SHALL BE LIMITED TO INTERIOR LOCAL SUBDIVISION STREETS ONLY.
11. DRAINAGE SHALL NOT CROSS PROPERTY LINES. EXCESS OR CONCENTRATED DRAINAGE SHALL BE CONTAINED ON SITE OR DIRECTED TO AN APPROVED DRAINAGE FACILITY.
12. VINEYARD ACCEPTS NO RESPONSIBILITY FOR ANY PROPERTY DAMAGE CAUSED BY GROUND WATER FLOODING.
13. ALL BUILDINGS AND DEVELOPMENT SHALL BE IN CONFORMANCE WITH THE VINEYARD ZONING ORDINANCE.
14. VINEYARD TOWN CENTER MASTER ASSOCIATION,
    13702 S. 200 W., DRAPER , UT. 84020

ROCKY MOUNTAIN POWER

1. PURSUANT TO UTAH CODE ANN. 54-3-27 THIS PLAT CONVEYS TO THE OWNER(S) OR OPERATORS OF UTILITY FACILITIES A PUBLIC UTILITY EASEMENT ALONG WITH ALL THE RIGHTS AND DUTIES DESCRIBED THEREIN.
2. PURSUANT TO UTAH CODE ANN. 17-27a-603(4)(c)(ii) ROCKY MOUNTAIN POWER ACCEPTS DELIVERY OF THE PUE AS DESCRIBED IN THIS PLAT AND APPROVES THIS PLAT SOLELY FOR THE PURPOSE OF CONFIRMING THAT THE PLAT CONTAINS PUBLIC UTILITY EASEMENTS AND APPROXIMATES THE LOCATION OF THE PUBLIC UTILITY EASEMENTS, BUT DOES NOT WARRANT THEIR PRECISE LOCATION. ROCKY MOUNTAIN POWER MAY REQUIRE OTHER EASEMENTS IN ORDER TO SERVE THIS DEVELOPMENT. THIS APPROVAL DOES NOT AFFECT ANY RIGHT THAT ROCKY MOUNTAIN POWER HAS UNDER:
   a. A RECORDED EASEMENT OR RIGHT-OF-WAY
   b. THE LAW APPLICABLE TO PRESCRIPTIVE RIGHTS
   c. TITLE 54, CHAPTER 8a, DAMAGE TO UNDERGROUND UTILITY FACILITIES OR
   d. ANY OTHER PROVISION OF LAW

DOMINION ENERGY CORPORATION

DOMINION ENERGY CORPORATION APPROVES THIS PLAT SOLELY FOR THE PURPOSE OF CONFIRMING THAT THE PLAT CONTAINS PUBLIC UTILITY EASEMENTS. DOMINION ENERGY CORPORATION MAY REQUIRE OTHER EASEMENTS IN ORDER TO SERVE THIS DEVELOPMENT. THIS APPROVAL DOES NOT CONSTITUTE ABROGATION OR WAIVER OF ANY OTHER EXISTING RIGHTS, OBLIGATIONS OR LIABILITIES PROVIDE BY LAW OR EQUITY. THIS APPROVAL DOES NOT CONSTITUTE ACCEPTANCE, APPROVAL OR ACKNOWLEDGEMENT OF ANY TERMS CONTAINED IN THE PLAT, INCLUDING THOSE SET FORTH IN THE OWNERS DEDICATION AND THE NOTES AND DOES NOT CONSTITUTE A GUARANTEE OF PARTICULAR TERMS OF NATURAL GAS SERVICE. FOR FURTHER INFORMATION PLEASE CONTACT DOMINION ENERGY CORPORATION'S
RIGHT-OF-WAY DEPARTMENT AT 800-366-8532.

1 OF 2	07/09/20	SCALE: 1" = 20'	SURVEYOR'S SEAL	CLERK - RECORDER SEAL		

PREPARED FOR
EDGE HOMES
13702 SOUTH 200 WEST, SUITE B12
DRAPER, UTAH 84020
PH: 801-494-0150

FOCUS©
ENGINEERING AND SURVEYING, LLC
6949 SOUTH HIGH TECH DRIVE SUITE 200
MIDVALE, UT 84047 PH: (801) 352-0075
www.focusutah.com

Z:_2020\20-0169 Lakefront at Vineyard Town Center South Redesign\design\dwg\sheets\FINAL PLATS\PHASE 1E\V2.0 Final Plat Phase 1E BLDG PP.dwg

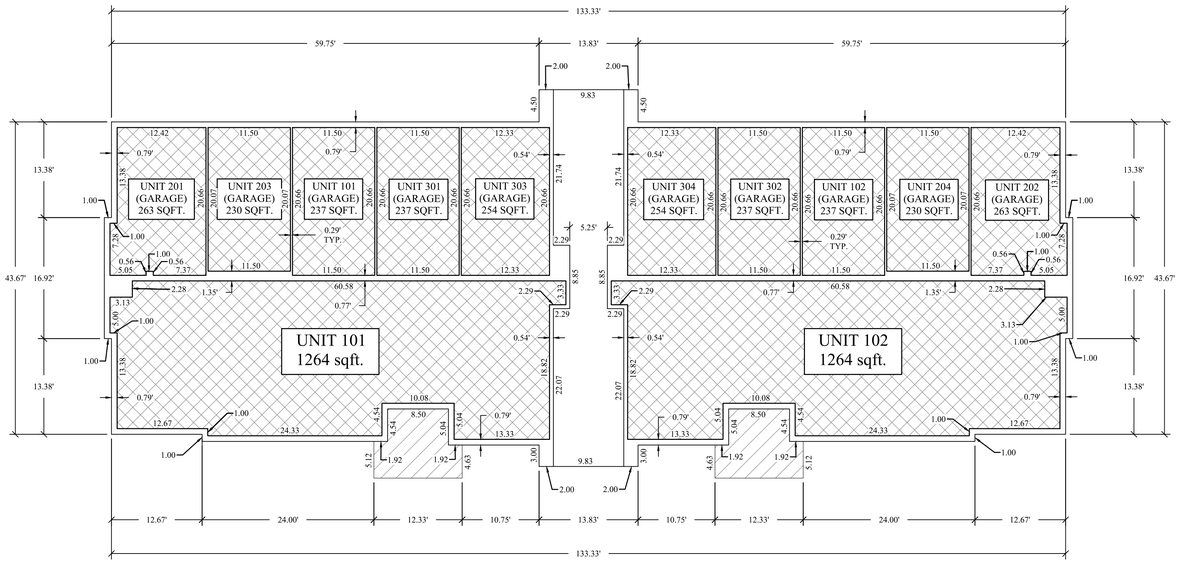

MAIN FLOOR

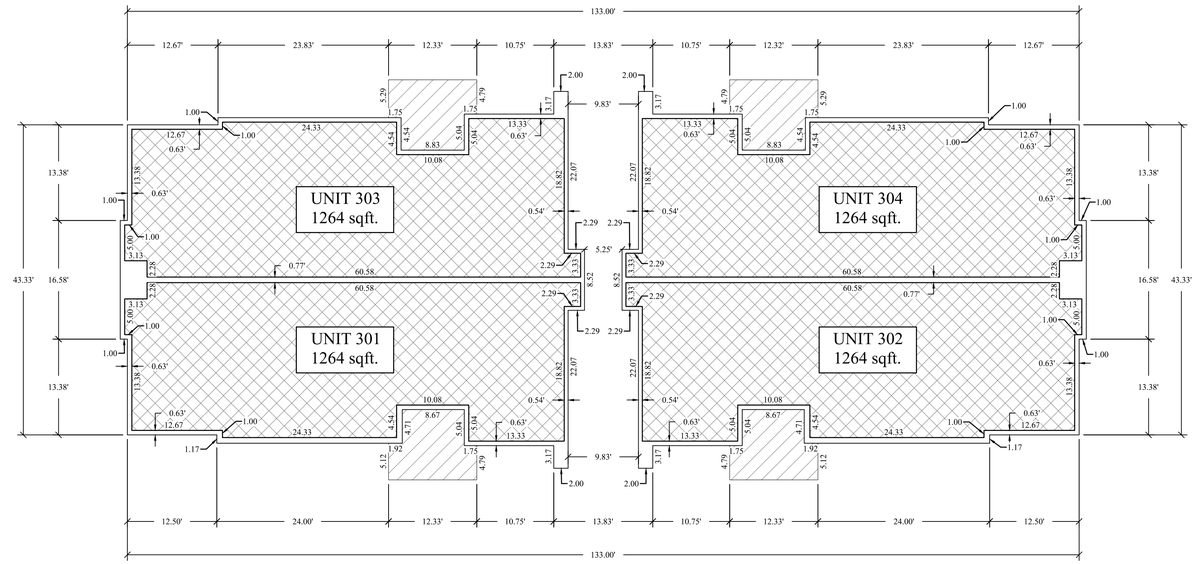

THIRD FLOOR

CONDOMINIUM DETAILS
BLDG. PP

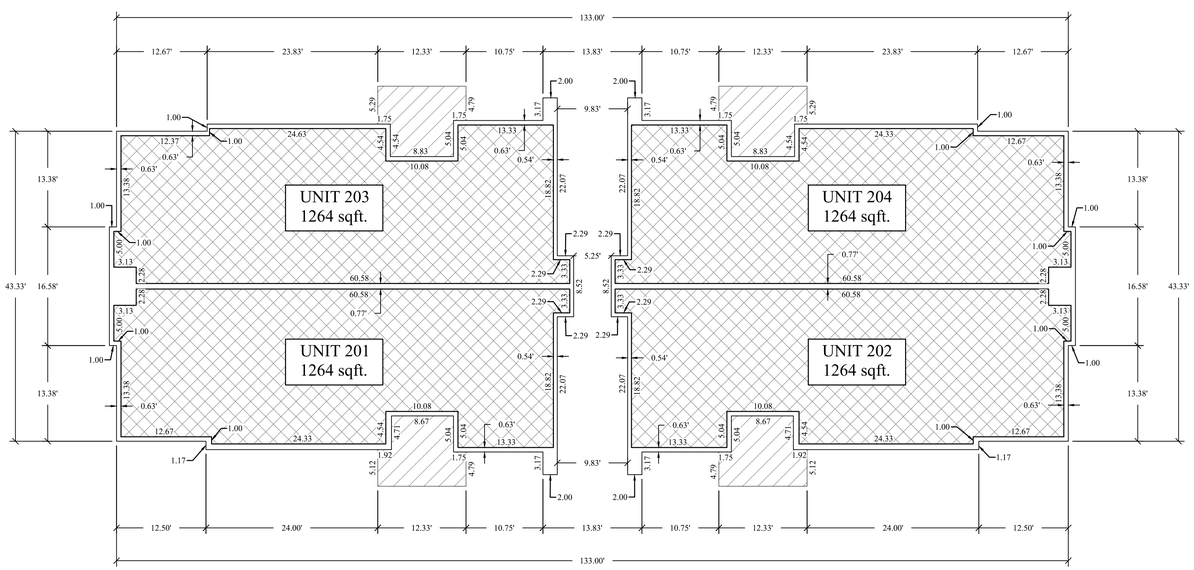

SECOND FLOOR

NOTES

1. ALL BUILDING WALLS ARE PARALLEL AND PERPENDICULAR TO REFERENCE BEARING SHOWN ON PLATS.

2. ALL AREAS ARE COMMON AREAS AND FACILITIES EXCEPT AS OTHERWISE SPECIFICALLY DESIGNATED.

ADDRESS TABLE

BUILDING NO.	UNIT NO.	ADDRESS
PP	101	
PP	102	
PP	201	
PP	202	
PP	203	
PP	204	
PP	301	
PP	302	
PP	303	
PP	304	

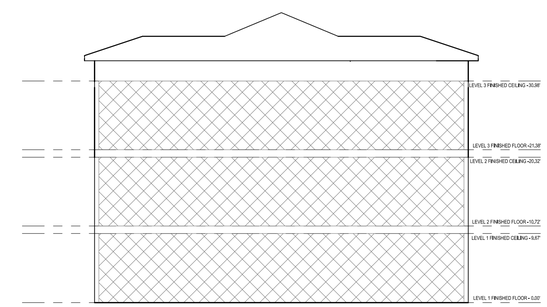

LIMITS OF COMMON AREA & PUE

LIMITS OF PRIVATE OWNERSHIP

LIMITS OF LIMITED COMMON AREA & PUE

GRAPHIC SCALE

10 0 5 10 20 40

(IN FEET)
1 inch = 10 ft.

LAKEFRONT @ VINEYARD TOWN CENTER

PHASE 1E, PLAT PP CONDOMINIUMS

(AMENDING PORTIONS OF LOT 4, GENEVA PARK WEST SUBDIVISION)
PORTIONS OF SECTION 7, T6S, R2E,
SALT LAKE BASE & MERIDIAN
VINEYARD CITY, UTAH COUNTY, UTAH

2 OF 2	07/09/2020	SCALE: 1" = 10'

PREPARED FOR
EDGE HOMES
13702 SOUTH 200 WEST, SUITE B12
DRAPER, UTAH 84020
PH: 801-494-0150

FOCUS©
ENGINEERING AND SURVEYING, LLC
6949 SOUTH HIGH TECH DRIVE SUITE 200
MIDVALE, UT 84047 PH: (801) 352-0075
www.focusutah.com

SURVEYOR'S SEAL	CLERK - RECORDER SEAL		

Z:_2020\20-0169 Lakefront at Vineyard Town Center South Redesign\design 20-0169\dwg\sheets\FINAL PLATS\PHASE 1E\C2.1 Final Plat Phase 1E BLDG PP.dwg

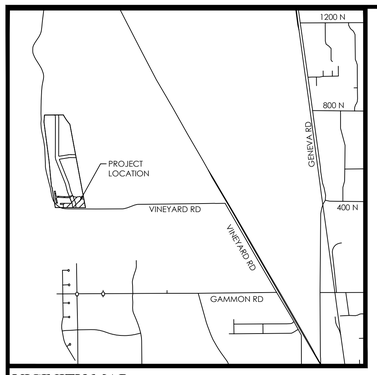

VICINITY MAP

N.T.S

NOTES

1. #5 X 24" REBAR & CAP (FOCUS ENG) TO BE SET AT ALL LOT CORNERS. NAILS OR PLUGS TO BE SET IN TOP BACK OF CURB AT EXTENSION OF SIDE LOT LINES, IN LIEU OF REBAR AND CAPS AT FRONT LOT CORNERS.
2. ALL PUBLIC UTILITY EASEMENTS PLATTED HEREON ARE IN PERPETUITY FOR INSTALLATION, MAINTENANCE, REPAIR AND REPLACEMENT OF PUBLIC UTILITIES, SIDEWALKS AND APPURTENANT PARTS THEREOF AND THE RIGHT TO REASONABLE ACCESS TO GRANTOR'S PROPERTY FOR THE ABOVE DESCRIBED PURPOSES. THE EASEMENT SHALL RUN WITH THE REAL PROPERTY AND SHALL BE BINDING UPON THE GRANTOR AND THE GRANTOR'S SUCCESSORS, HEIRS, AND ASSIGNS.
3. ALL COMMON AREAS AND STREETS OR DRIVES TO SERVE AS PUBLIC UTILITY EASEMENTS.
4. ALL AREAS ARE COMMON AREAS AND FACILITIES EXCEPT AS OTHERWISE SPECIFICALLY DESIGNATED.
5. PLAT MUST BE RECORDED WITHIN 12 MONTHS OF FINAL PLAT APPROVAL, OR FOR PHASED DEVELOPMENTS, WITHIN 24 MONTHS OF RECORDATION OF MOST RECENT PHASE. THE FIRST FINAL PLAT APPROVAL WAS GRANTED ON THE ____ DAY OF ____, 20__.
6. THE INSTALLATION OF IMPROVEMENTS SHALL CONFORM TO ALL CITY STANDARDS, RESOLUTIONS AND ORDINANCES.
7. BUILDING PERMITS WILL NOT BE ISSUED UNTIL ALL IMPROVEMENTS HAVE BEEN INSTALLED AND ACCEPTED BY THE CITY IN WRITING OR BONDED FOR.
8. BUILDING PERMITS WILL NOT BE ISSUED UNTIL ALL IMPACT AND CONNECTION FEES ARE PAID IN FULL PER CITY REGULATIONS IN EFFECT AT THE TIME OF BUILDING PERMIT ISSUANCE.
9. NO CITY MAINTENANCE SHALL BE PROVIDED FOR STREETS DESIGNATED AS "PRIVATE" ON THIS PLAT.
10. DRIVEWAYS AND LOT ACCESS SHALL BE LIMITED TO INTERIOR LOCAL SUBDIVISION STREETS ONLY.
11. DRAINAGE SHALL NOT CROSS PROPERTY LINES. EXCESS OR CONCENTRATED DRAINAGE SHALL BE CONTAINED ON SITE OR DIRECTED TO AN APPROVED DRAINAGE FACILITY.
12. VINEYARD ACCEPTS NO RESPONSIBILITY FOR ANY PROPERTY DAMAGE CAUSED BY GROUND WATER FLOODING.
13. ALL BUILDINGS AND DEVELOPMENT SHALL BE IN CONFORMANCE WITH THE VINEYARD ZONING ORDINANCE.
14. VINEYARD TOWN CENTER MASTER ASSOCIATION,
    13702 S. 200 W., DRAPER , UT. 84020

ROCKY MOUNTAIN POWER

1. PURSUANT TO UTAH CODE ANN. 54-3-27 THIS PLAT CONVEYS TO THE OWNER(S) OR OPERATORS OF UTILITY FACILITIES A PUBLIC UTILITY EASEMENT ALONG WITH ALL THE RIGHTS AND DUTIES DESCRIBED THEREIN.
2. PURSUANT TO UTAH CODE ANN. 17-27a-603(4)(c)(ii) ROCKY MOUNTAIN POWER ACCEPTS DELIVERY OF THE PUE AS DESCRIBED IN THIS PLAT AND APPROVES THIS PLAT SOLELY FOR THE PURPOSE OF CONFIRMING THAT THE PLAT CONTAINS PUBLIC UTILITY EASEMENTS AND APPROXIMATES THE LOCATION OF THE PUBLIC UTILITY EASEMENTS, BUT DOES NOT WARRANT THEIR PRECISE LOCATION. ROCKY MOUNTAIN POWER MAY REQUIRE OTHER EASEMENTS IN ORDER TO SERVE THIS DEVELOPMENT. THIS APPROVAL DOES NOT AFFECT ANY RIGHT THAT ROCKY MOUNTAIN POWER HAS UNDER:
   a. A RECORDED EASEMENT OR RIGHT-OF-WAY
   b. THE LAW APPLICABLE TO PRESCRIPTIVE RIGHTS
   c. TITLE 54, CHAPTER 8a, DAMAGE TO UNDERGROUND UTILITY FACILITIES OR
   d. ANY OTHER PROVISION OF LAW

DOMINION ENERGY CORPORATION

DOMINION ENERGY CORPORATION APPROVES THIS PLAT SOLELY FOR THE PURPOSE OF CONFIRMING THAT THE PLAT CONTAINS PUBLIC UTILITY EASEMENTS. DOMINION ENERGY CORPORATION MAY REQUIRE OTHER EASEMENTS IN ORDER TO SERVE THIS DEVELOPMENT. THIS APPROVAL DOES NOT CONSTITUTE ABROGATION OR WAIVER OF ANY OTHER EXISTING RIGHTS, OBLIGATIONS OR LIABILITIES PROVIDE BY LAW OR EQUITY. THIS APPROVAL DOES NOT CONSTITUTE ACCEPTANCE, APPROVAL OR ACKNOWLEDGEMENT OF ANY TERMS CONTAINED IN THE PLAT, INCLUDING THOSE SET FORTH IN THE OWNERS DEDICATION AND THE NOTES AND DOES NOT CONSTITUTE A GUARANTEE OF PARTICULAR TERMS OF NATURAL GAS SERVICE. FOR FURTHER INFORMATION PLEASE CONTACT DOMINION ENERGY CORPORATION'S
RIGHT-OF-WAY DEPARTMENT AT 800-366-8532.

LEGEND

- BOUNDARY
- SECTION LINE
- EASEMENT
- RIGHT-OF-WAY LINE
- BUILDING SETBACK
- EXISTING PROPERTY LINE
- #5 REBAR AND CAP (FOCUS ENG.) TO BE SET
- SECTION MONUMENT (FOUND)
- LIMITS OF COMMON AREA & PUE
- LIMITS OF PRIVATE OWNERSHIP
- LIMITS OF LIMITED COMMON AREA & PUE

LAKEFRONT
@ VINEYARD TOWN CENTER
PHASE 1E, PLAT Q
CONDOMINIUMS
(AMENDING PORTIONS OF LOT 4, GENEVA PARK WEST SUBDIVISION)
PORTIONS OF SECTION 7, T6S, R2E,
SALT LAKE BASE & MERIDIAN
VINEYARD CITY, UTAH COUNTY, UTAH

GRAPHIC SCALE

20 0 10 20 40 80

(IN FEET)
1 inch = 20 ft.

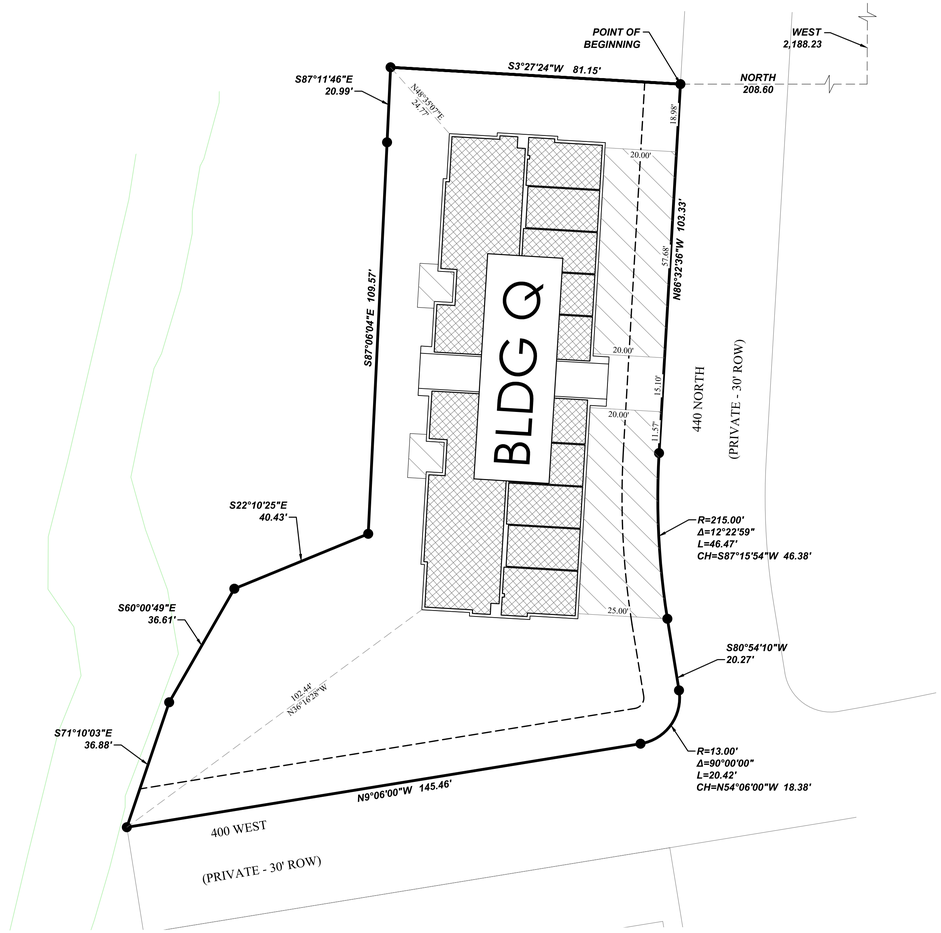

SURVEYOR'S CERTIFICATE

KNOWN ALL MEN BY THESE PRESENTS: I, SPENCER W. LLEWELYN, DO HEREBY CERTIFY THAT I AM A PROFESSIONAL LAND SURVEYOR, AND THAT I HOLD CERTIFICATE NO. #10516507 AS PRESCRIBED UNDER THE LAWS OF THE STATE OF UTAH. I FURTHER CERTIFY THAT AT THE REQUEST OF THE OWNER OF THE BELOW DESCRIBED LAND, I PERFORMED A SURVEY OF SAID LAND, THAT THE DESCRIPTION BELOW CORRECTLY DESCRIBES THE LAND SURFACE UPON WHICH WILL BE CONSTRUCTED , AND THIS RECORD OF SURVEY MAP, CONSISTING OF THREE (3) PAGES IS ACCURATE AND COMPLIES WITH THE PROVISIONS OF SECTION 57-8-13 (1) OF THE UTAH CONDOMINIUM OWNERSHIP ACT. I FURTHER CERTIFY THAT THE REFERENCE MARKERS SHOWN ON THIS PLAT ARE LOCATED AS SHOWN AND ARE SUFFICIENT TO READILY RETRACE OR RE-ESTABLISH THIS SURVEY.

Spencer W. Llewelyn
Professional Land Surveyor
Certificate No. 10516507

Date

BOUNDARY DESCRIPTION

A portion of Lot 4, GENEVA PARK WEST, according to the Official Plat thereof recorded March 14, 2013 as Entry No. 24721:2013 in the Office of the Utah County Recorder, located in the South Half of Section 7, Township 6 South, Range 2 East, Salt Lake Base & Meridian, in Vineyard, Utah, more particularly described as follows:

Beginning at a point located West 2,188.23 feet and North 208.60 feet from the Southeast Corner of Section 7, T6S, R2E, SLB&M (Basis of Bearing: S89°25'01"W along the Section line from the South 1/4 Corner of Section 8 to the Southeast Corner of Section 7, T6S, R2E, SLB&M); thence N86°32'36"W 103.33 feet; thence along the arc of a curve to the left with a radius of 215.00 feet a distance of 46.47 feet through a central angle of 12°22'59" Chord: S87°15'54"W 46.38 feet; thence S80°54'10"W 20.27 feet; thence along the arc of a curve to the right having a radius of 13.00 feet a distance of 20.42 feet through a central angle of 90°00'00" Chord: N54°06'00"W 18.38 feet; thence N09°06'00"W 145.46 feet; thence S71°10'03"E 36.88 feet; thence S60°00'49"E 36.61 feet; thence S22°10'25"E 40.43 feet; thence S87°06'04"E 109.57 feet; thence S87°11'46"E 20.99 feet; thence S03°27'24"W 81.15 feet to the point of beginning.

Contains: 19,270 square feet or 0.44 acres+/-

OWNER'S DEDICATION

KNOW ALL MEN BY THESE PRESENT THAT WE, ALL OF THE UNDERSIGNED OWNERS OF ALL OF THE TRACT OF LAND DESCRIBED HEREWITH AS

LAKEFRONT @ VINEYARD TOWN CENTER
PHASE 1E, PLAT Q
CONDOMINIUMS

A UTAH CONDOMINIUM PROJECT LOCATED ON SAID TRACT OF LAND, HAVING CAUSED A SURVEY TO BE MADE AND THIS RECORD OF SURVEY MAP TO BE PREPARED, DO HEREBY GIVE OUR CONSENT TO THE RECORDATION OF THIS RECORD OF SURVEY MAP AND SUBMIT THIS PROPERTY TO THE UTAH CONDOMINIUM OWNERSHIP ACT. FURTHERMORE, WE DO HEREBY CONVEY TO ALL PUBLIC UTILITY AGENCIES, THEIR SUCCESSORS AND ASSIGNS, PERMANENT EASEMENTS AS SHOWN BY THE AREA MARKED "UTILITY EASEMENT" ON THE WITHIN PLAT FOR THE CONSTRUCTION AND MAINTENANCE OF ELECTRICAL, TELEPHONE, NATURAL GAS, SEWER AND WATER LINES AND APPURTENANCES, TOGETHER WITH THE RIGHT OF ACCESS THERETO

IN WITNESS WHEREOF, WE HAVE HEREUNTO SET OUR HANDS THIS _____ DAY OF _____ A.D. 20____

EDGE VINEYARD SHORES, LLC
STEVE MADDOX, MANAGER

LIMITED LIABILITY ACKNOWLEDGMENT

STATE OF UTAH
S.S.
COUNTY OF _____

ON THE ____ DAY OF _____ A.D. 20 ____ PERSONALLY APPEARED BEFORE ME , THE UNDERSIGNED NOTARY PUBLIC, IN AND FOR THE COUNTY OF _____, IN SAID STATE OF UTAH, _____, WHO AFTER BEING DULY SWORN, ACKNOWLEDGED TO ME THAT HE/SHE IS THE _____ OF _____ L.L.C., A UTAH L.L.C. AND THAT HE/SHE SIGNED THE OWNER'S DEDICATION FREELY AND VOLUNTARILY FOR AND IN BEHALF OF SAID LIMITED LIABILITY COMPANY FOR THE PURPOSES THEREIN MENTIONED.

MY COMMISSION EXPIRES:_____

A NOTARY PUBLIC COMMISSIONED IN UTAH RESIDING IN _____ COUNTY

MY COMMISSION No._____

PRINTED FULL NAME OF NOTARY

ACCEPTANCE BY LEGISLATIVE BODY

THE LEGISLATIVE BODY OF VINEYARD CITY OF UTAH COUNTY, APPROVES THIS SUBDIVISION AND HEREBY ACCEPTS THE DEDICATION OF ALL STREETS, EASEMENTS, AND OTHER PARCELS OF LAND INTENDED FOR PUBLIC PURPOSES FOR THE PERPETUAL USE OF THE PUBLIC THIS ____ DAY OF _____20___.

VINEYARD PLANNING COMMISSION CHAIR DATE: ____/____/_____	CITY ENGINEER DATE: ____/____/_____
CITY MANAGER DATE: ____/____/_____	CLERK/RECORDER DATE: ____/____/_____
CITY ATTORNEY DATE: ____/____/_____	

LAKEFRONT
@ VINEYARD TOWN CENTER
PHASE 1E, PLAT Q
CONDOMINIUMS
(AMENDING PORTIONS OF LOT 4, GENEVA PARK WEST SUBDIVISION)
PORTIONS OF SECTION 7, T6S, R2E,
SALT LAKE BASE & MERIDIAN
VINEYARD CITY, UTAH COUNTY, UTAH

1 OF 2	07/09/20	SCALE: 1" = 20'	SURVEYOR'S SEAL	CLERK - RECORDER SEAL		

PREPARED FOR
EDGE HOMES
13702 SOUTH 200 WEST, SUITE B12
DRAPER, UTAH 84020
PH: 801-494-0150

FOCUS©
ENGINEERING AND SURVEYING, LLC
6949 SOUTH HIGH TECH DRIVE SUITE 200
MIDVALE, UT 84047 PH: (801) 352-0075
www.focusutah.com

Z:_2020\20-0169 Lakefront at Vineyard Town Center South Redesign\design 20-0169\dwg\sheets\FINAL PLATS\PHASE 1E\V2.0 Final Plat Phase 1E BLDG Q.dwg

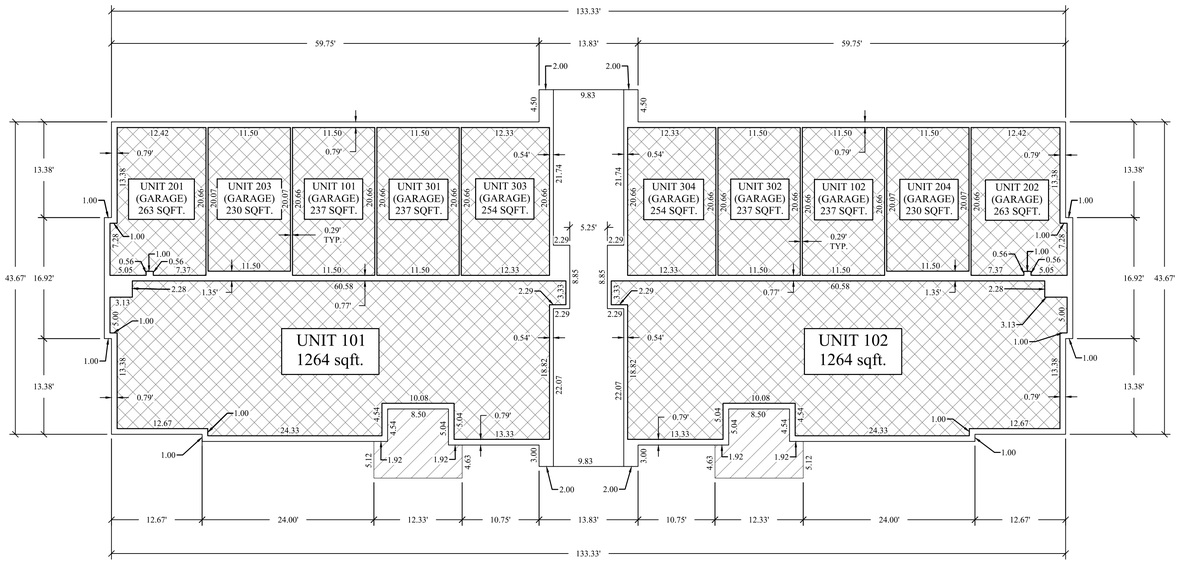

MAIN FLOOR

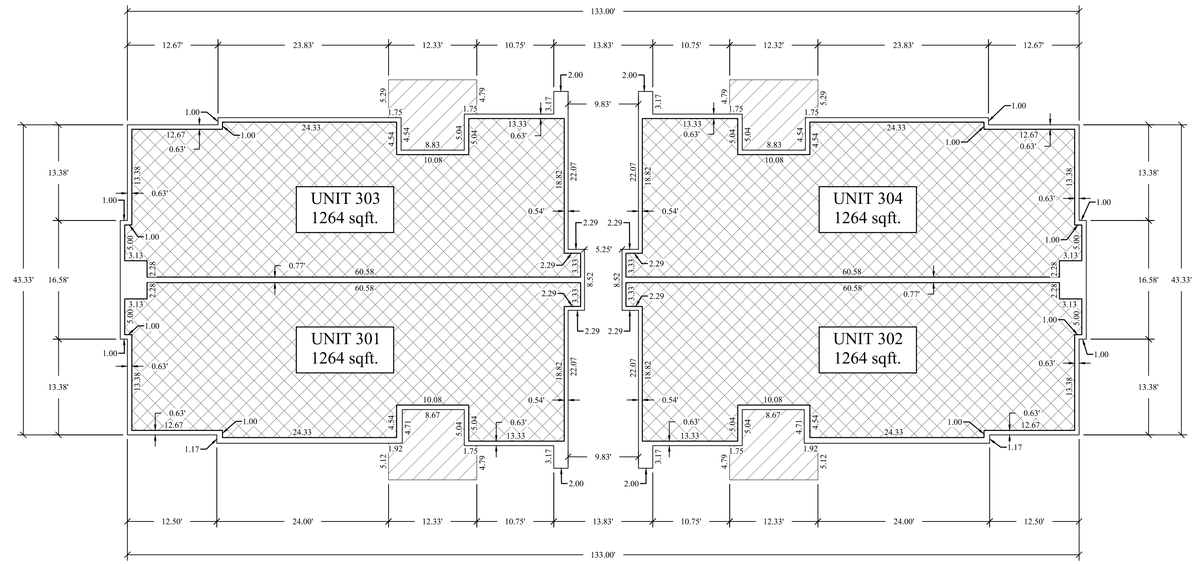

THIRD FLOOR

CONDOMINIUM DETAILS
BLDG. Q

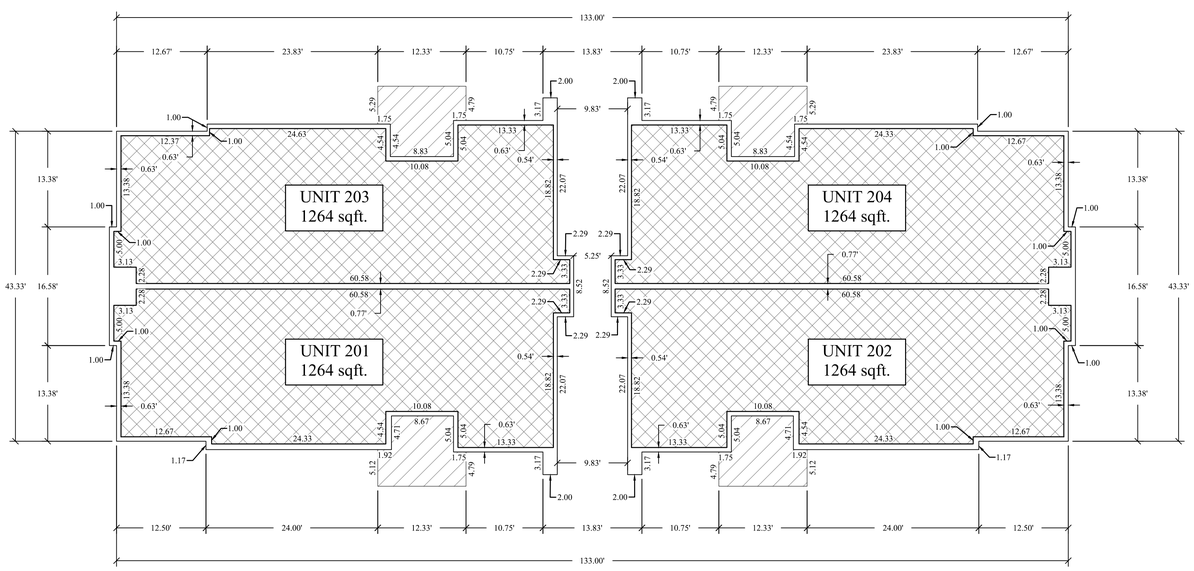

SECOND FLOOR

NOTES

1. ALL BUILDING WALLS ARE PARALLEL AND PERPENDICULAR TO REFERENCE BEARING SHOWN ON PLATS.

2. ALL AREAS ARE COMMON AREAS AND FACILITIES EXCEPT AS OTHERWISE SPECIFICALLY DESIGNATED.

ADDRESS TABLE

BUILDING NO.	UNIT NO.	ADDRESS
Q	101	
Q	102	
Q	201	
Q	202	
Q	203	
Q	204	
Q	301	
Q	302	
Q	303	
Q	304	

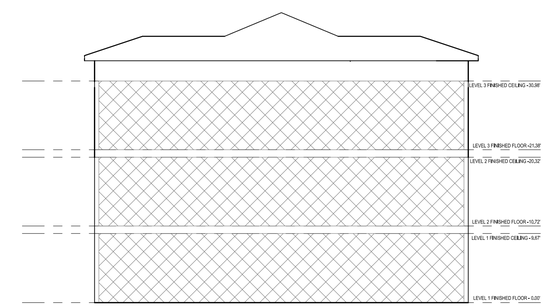

LIMITS OF COMMON AREA & PUE

LIMITS OF PRIVATE OWNERSHIP

LIMITS OF LIMITED COMMON AREA & PUE

GRAPHIC SCALE

10 0 5 10 20 40

(IN FEET)
1 inch = 10 ft.

LAKEFRONT @ VINEYARD TOWN CENTER

PHASE 1E, PLAT Q CONDOMINIUMS

(AMENDING PORTIONS OF LOT 4, GENEVA PARK WEST SUBDIVISION)
PORTIONS OF SECTION 7, T6S, R2E,
SALT LAKE BASE & MERIDIAN
VINEYARD CITY, UTAH COUNTY, UTAH

2 OF 2	07/09/2020	SCALE: 1" = 10'

PREPARED FOR
EDGE HOMES
13702 SOUTH 200 WEST, SUITE B12
DRAPER, UTAH 84020
PH: 801-494-0150

FOCUS©
ENGINEERING AND SURVEYING, LLC
6949 SOUTH HIGH TECH DRIVE SUITE 200
MIDVALE, UT 84047 PH: (801) 352-0075
www.focusutah.com

SURVEYOR'S SEAL	CLERK - RECORDER SEAL		

Z:_2020\20-0169 Lakefront at Vineyard Town Center South Redesign\design 20-0169\dwg\sheets\FINAL PLATS\PHASE 1E\C2.1 Final Plat Phase 1E BLDG Q.dwg

LAKEFRONT
@ VINEYARD TOWN CENTER
PHASE 1E, PLAT R
CONDOMINIUMS
(AMENDING PORTIONS OF LOT 4, GENEVA PARK WEST SUBDIVISION)

PORTIONS OF SECTION 7, T6S, R2E,
SALT LAKE BASE & MERIDIAN
VINEYARD CITY, UTAH COUNTY, UTAH

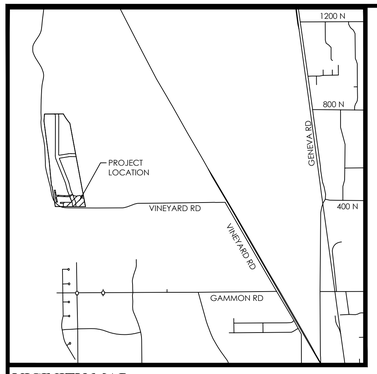

VICINITY MAP
N.T.S

LEGEND

- BOUNDARY
- SECTION LINE
- EASEMENT
- RIGHT-OF-WAY LINE
- BUILDING SETBACK
- EXISTING PROPERTY LINE
- #5 REBAR AND CAP (FOCUS ENG.) TO BE SET
- SECTION MONUMENT (FOUND)
- LIMITS OF COMMON AREA & PUE
- LIMITS OF PRIVATE OWNERSHIP
- LIMITS OF LIMITED COMMON AREA & PUE

Curve Table

CURVE	RADIUS	DELTA	LENGTH	CHORD DIRECTION	CHORD LENGTH
C1	970.00	0°47'30"	13.40	S89°36'00"E	13.40
C2	970.00	2°39'39"	45.05	S87°52'26"E	45.04

GRAPHIC SCALE

20 0 10 20 40 80

(IN FEET)
1 inch = 20 ft.

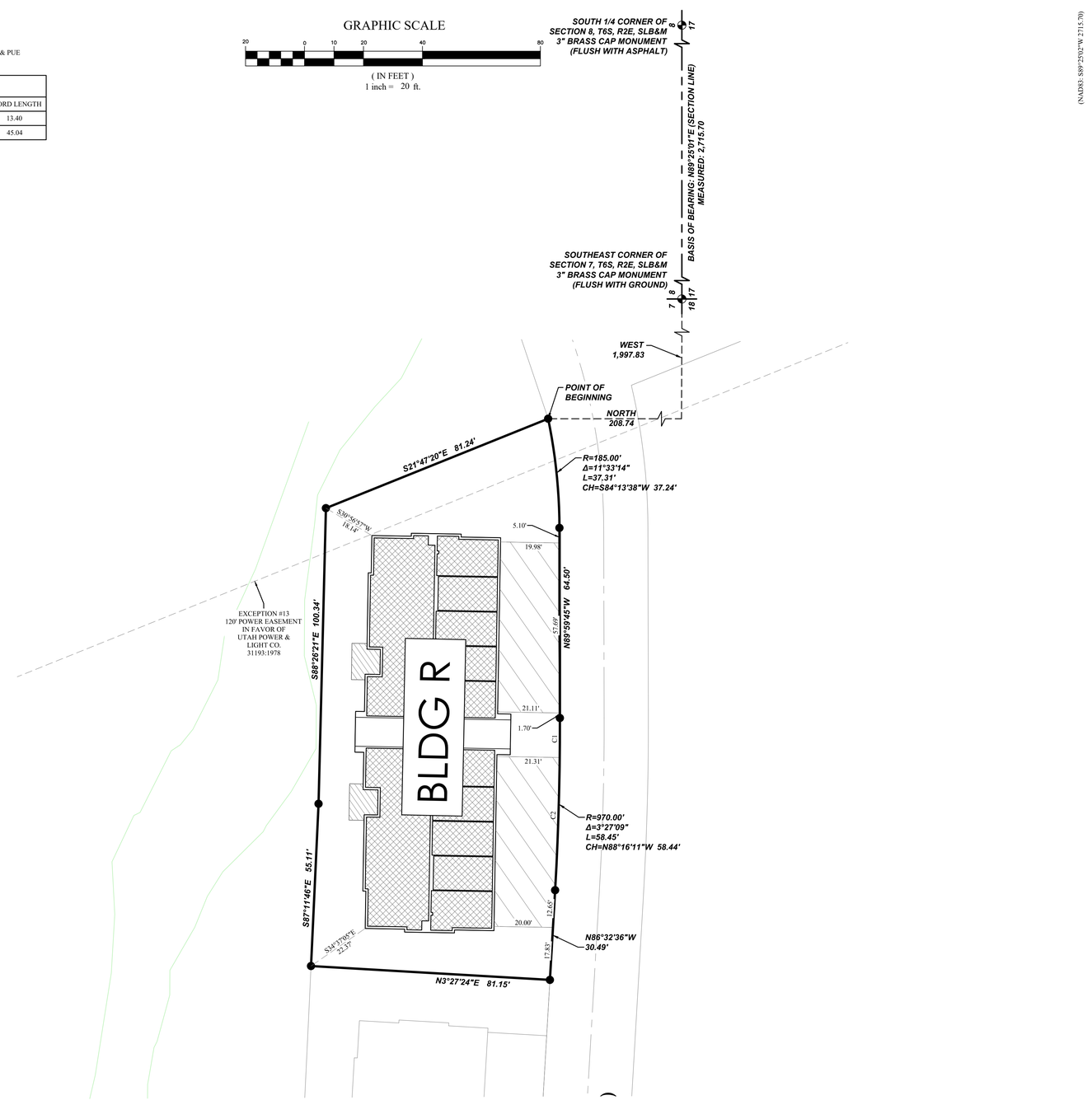

NOTES

1. #5 X 24" REBAR & CAP (FOCUS ENG) TO BE SET AT ALL LOT CORNERS. NAILS OR PLUGS TO BE SET IN TOP BACK OF CURB AT EXTENSION OF SIDE LOT LINES, IN LIEU OF REBAR AND CAPS AT FRONT LOT CORNERS.
2. ALL PUBLIC UTILITY EASEMENTS PLATTED HEREON ARE IN PERPETUITY FOR INSTALLATION, MAINTENANCE, REPAIR AND REPLACEMENT OF PUBLIC UTILITIES, SIDEWALKS AND APPURTENANT PARTS THEREOF AND THE RIGHT TO REASONABLE ACCESS TO GRANTOR'S PROPERTY FOR THE ABOVE DESCRIBED PURPOSES. THE EASEMENT SHALL RUN WITH THE REAL PROPERTY AND SHALL BE BINDING UPON THE GRANTOR AND THE GRANTOR'S SUCCESSORS, HEIRS, AND ASSIGNS.
3. ALL COMMON AREAS AND STREETS OR DRIVES TO SERVE AS PUBLIC UTILITY EASEMENTS.
4. ALL AREAS ARE COMMON AREAS AND FACILITIES EXCEPT AS OTHERWISE SPECIFICALLY DESIGNATED.
5. PLAT MUST BE RECORDED WITHIN 12 MONTHS OF FINAL PLAT APPROVAL, OR FOR PHASED DEVELOPMENTS, WITHIN 24 MONTHS OF RECORDATION OF MOST RECENT PHASE. THE FIRST FINAL PLAT APPROVAL WAS GRANTED ON THE ____ DAY OF ____, 20 __.
6. THE INSTALLATION OF IMPROVEMENTS SHALL CONFORM TO ALL CITY STANDARDS, RESOLUTIONS AND ORDINANCES.
7. BUILDING PERMITS WILL NOT BE ISSUED UNTIL ALL IMPROVEMENTS HAVE BEEN INSTALLED AND ACCEPTED BY THE CITY IN WRITING OR BONDED FOR.
8. BUILDING PERMITS WILL NOT BE ISSUED UNTIL ALL IMPACT AND CONNECTION FEES ARE PAID IN FULL PER CITY REGULATIONS IN EFFECT AT THE TIME OF BUILDING PERMIT ISSUANCE.
9. NO CITY MAINTENANCE SHALL BE PROVIDED FOR STREETS DESIGNATED AS "PRIVATE" ON THIS PLAT.
10. DRIVEWAYS AND LOT ACCESS SHALL BE LIMITED TO INTERIOR LOCAL SUBDIVISION STREETS ONLY.
11. DRAINAGE SHALL NOT CROSS PROPERTY LINES. EXCESS OR CONCENTRATED DRAINAGE SHALL BE CONTAINED ON SITE OR DIRECTED TO AN APPROVED DRAINAGE FACILITY.
12. VINEYARD ACCEPTS NO RESPONSIBILITY FOR ANY PROPERTY DAMAGE CAUSED BY GROUND WATER FLOODING.
13. ALL BUILDINGS AND DEVELOPMENT SHALL BE IN CONFORMANCE WITH THE VINEYARD ZONING ORDINANCE.
14. VINEYARD TOWN CENTER MASTER ASSOCIATION,
    13702 S. 200 W., DRAPER , UT. 84020

ROCKY MOUNTAIN POWER

1. PURSUANT TO UTAH CODE ANN. 54-3-27 THIS PLAT CONVEYS TO THE OWNER(S) OR OPERATORS OF UTILITY FACILITIES A PUBLIC UTILITY EASEMENT ALONG WITH ALL THE RIGHTS AND DUTIES DESCRIBED THEREIN.
2. PURSUANT TO UTAH CODE ANN. 17-27a-603(4)(c)(ii) ROCKY MOUNTAIN POWER ACCEPTS DELIVERY OF THE PUE AS DESCRIBED IN THIS PLAT AND APPROVES THIS PLAT SOLELY FOR THE PURPOSE OF CONFIRMING THAT THE PLAT CONTAINS PUBLIC UTILITY EASEMENTS AND APPROXIMATES THE LOCATION OF THE PUBLIC UTILITY EASEMENTS, BUT DOES NOT WARRANT THEIR PRECISE LOCATION. ROCKY MOUNTAIN POWER MAY REQUIRE OTHER EASEMENTS IN ORDER TO SERVE THIS DEVELOPMENT. THIS APPROVAL DOES NOT AFFECT ANY RIGHT THAT ROCKY MOUNTAIN POWER HAS UNDER:
   a. A RECORDED EASEMENT OR RIGHT-OF-WAY
   b. THE LAW APPLICABLE TO PRESCRIPTIVE RIGHTS
   c. TITLE 54, CHAPTER 8a, DAMAGE TO UNDERGROUND UTILITY FACILITIES OR
   d. ANY OTHER PROVISION OF LAW

DOMINION ENERGY CORPORATION

DOMINION ENERGY CORPORATION APPROVES THIS PLAT SOLELY FOR THE PURPOSE OF CONFIRMING THAT THE PLAT CONTAINS PUBLIC UTILITY EASEMENTS. DOMINION ENERGY CORPORATION MAY REQUIRE OTHER EASEMENTS IN ORDER TO SERVE THIS DEVELOPMENT. THIS APPROVAL DOES NOT CONSTITUTE ABROGATION OR WAIVER OF ANY OTHER EXISTING RIGHTS, OBLIGATIONS OR LIABILITIES PROVIDE BY LAW OR EQUITY. THIS APPROVAL DOES NOT CONSTITUTE ACCEPTANCE, APPROVAL OR ACKNOWLEDGEMENT OF ANY TERMS CONTAINED IN THE PLAT, INCLUDING THOSE SET FORTH IN THE OWNERS DEDICATION AND THE NOTES AND DOES NOT CONSTITUTE A GUARANTEE OF PARTICULAR TERMS OF NATURAL GAS SERVICE. FOR FURTHER INFORMATION PLEASE CONTACT DOMINION ENERGY CORPORATION'S RIGHT-OF-WAY DEPARTMENT AT 800-366-8532.

SURVEYOR'S CERTIFICATE

KNOWN ALL MEN BY THESE PRESENTS: I, SPENCER W. LLEWELYN, DO HEREBY CERTIFY THAT I AM A PROFESSIONAL LAND SURVEYOR, AND THAT I HOLD CERTIFICATE NO. #10516507 AS PRESCRIBED UNDER THE LAWS OF THE STATE OF UTAH. I FURTHER CERTIFY THAT AT THE REQUEST OF THE OWNER OF THE BELOW DESCRIBED LAND, I PERFORMED A SURVEY OF SAID LAND, THAT THE DESCRIPTION BELOW CORRECTLY DESCRIBES THE LAND SURFACE UPON WHICH WILL BE CONSTRUCTED , AND THIS RECORD OF SURVEY MAP, CONSISTING OF THREE (3) PAGES IS ACCURATE AND COMPLIES WITH THE PROVISIONS OF SECTION 57-8-13 (1) OF THE UTAH CONDOMINIUM OWNERSHIP ACT. I FURTHER CERTIFY THAT THE REFERENCE MARKERS SHOWN ON THIS PLAT ARE LOCATED AS SHOWN AND ARE SUFFICIENT TO READILY RETRACE OR RE-ESTABLISH THIS SURVEY.

Spencer W. Llewelyn
Professional Land Surveyor
Certificate No. 10516507

Date

BOUNDARY DESCRIPTION

A portion of Lot 4, GENEVA PARK WEST, according to the Official Plat thereof recorded March 14, 2013 as Entry No. 24721:2013 in the Office of the Utah County Recorder, located in the South Half of Section 7, Township 6 South, Range 2 East, Salt Lake Base & Meridian, in Vineyard, Utah, more particularly described as follows:

Beginning at a point located West 1,997.83 feet and North 208.74 feet from the Southeast Corner of Section 7, T6S, R2E, SLB&M (Basis of Bearing: S89°25'01"W along the Section line from the South 1/4 Corner of Section 8 to the Southeast Corner of Section 7, T6S, R2E, SLB&M); thence Westerly along the arc of a 185.00 feet radius non-tangent curve to the right (radius bears: N11°32'59"W) 37.31 feet through a central angle of 11°33'14" Chord: S84°13'38"W 37.24 feet; thence N89°59'45"W 64.50 feet; thence along the arc of a curve to the right with a radius of 970.00 feet a distance of 58.45 feet through a central angle of 03°27'09" Chord: N88°16'11"W 58.44 feet; thence N86°32'36"W 30.49 feet; thence N03°27'24"E 81.15 feet; thence S87°11'46"E 55.11 feet; thence S88°26'21"E 100.34 feet; thence S21°47'20"E 81.24 feet to the point of beginning.

Contains: 13,966 square feet or 0.32 acres+/-

OWNER'S DEDICATION

KNOW ALL MEN BY THESE PRESENT THAT WE, ALL OF THE UNDERSIGNED OWNERS OF ALL OF THE TRACT OF LAND DESCRIBED HEREWITH AS

LAKEFRONT @ VINEYARD TOWN CENTER
PHASE 1E, PLAT R
CONDOMINIUMS

A UTAH CONDOMINIUM PROJECT LOCATED ON SAID TRACT OF LAND, HAVING CAUSED A SURVEY TO BE MADE AND THIS RECORD OF SURVEY MAP TO BE PREPARED, DO HEREBY GIVE OUR CONSENT TO THE RECORDATION OF THIS RECORD OF SURVEY MAP AND SUBMIT THIS PROPERTY TO THE UTAH CONDOMINIUM OWNERSHIP ACT. FURTHERMORE, WE DO HEREBY CONVEY TO ALL PUBLIC UTILITY AGENCIES, THEIR SUCCESSORS AND ASSIGNS, PERMANENT EASEMENTS AS SHOWN BY THE AREA MARKED "UTILITY EASEMENT" ON THE WITHIN PLAT FOR THE CONSTRUCTION AND MAINTENANCE OF ELECTRICAL, TELEPHONE, NATURAL GAS, SEWER AND WATER LINES AND APPURTENANCES, TOGETHER WITH THE RIGHT OF ACCESS THERETO

IN WITNESS WHEREOF, WE HAVE HEREUNTO SET OUR HANDS THIS _____ DAY OF _____ A.D. 20____

EDGE VINEYARD SHORES, LLC
STEVE MADDOX, MANAGER

LIMITED LIABILITY ACKNOWLEDGMENT

STATE OF UTAH
S.S.
COUNTY OF _____

ON THE ____ DAY OF _____ A.D. 20____ PERSONALLY APPEARED BEFORE ME , THE UNDERSIGNED NOTARY PUBLIC, IN AND FOR THE COUNTY OF _____, IN SAID STATE OF UTAH, _____, WHO AFTER BEING DULY SWORN, ACKNOWLEDGED TO ME THAT HE/SHE IS THE _____ OF _____ L.L.C., A UTAH L.L.C. AND THAT HE/SHE SIGNED THE OWNER'S DEDICATION FREELY AND VOLUNTARILY FOR AND IN BEHALF OF SAID LIMITED LIABILITY COMPANY FOR THE PURPOSES THEREIN MENTIONED.

MY COMMISSION EXPIRES:_____

A NOTARY PUBLIC COMMISSIONED IN UTAH RESIDING IN _____ COUNTY

MY COMMISSION No._____

PRINTED FULL NAME OF NOTARY

ACCEPTANCE BY LEGISLATIVE BODY

THE LEGISLATIVE BODY OF VINEYARD CITY OF UTAH COUNTY, APPROVES THIS SUBDIVISION AND HEREBY ACCEPTS THE DEDICATION OF ALL STREETS, EASEMENTS, AND OTHER PARCELS OF LAND INTENDED FOR PUBLIC PURPOSES FOR THE PERPETUAL USE OF THE PUBLIC THIS ____ DAY OF _____ 20___.

VINEYARD PLANNING COMMISSION CHAIR DATE: ___/___/_____	CITY ENGINEER DATE: ___/___/_____
CITY MANAGER DATE: ___/___/_____	CLERK/RECORDER DATE: ___/___/_____
CITY ATTORNEY DATE: ___/___/_____	

LAKEFRONT
@ VINEYARD TOWN CENTER
PHASE 1E, PLAT R
CONDOMINIUMS
(AMENDING PORTIONS OF LOT 4, GENEVA PARK WEST SUBDIVISION)
PORTIONS OF SECTION 7, T6S, R2E,
SALT LAKE BASE & MERIDIAN
VINEYARD CITY, UTAH COUNTY, UTAH

1 OF 2	07/09/20	SCALE: 1" = 20'	SURVEYOR'S SEAL	CLERK - RECORDER SEAL		

PREPARED FOR
EDGE HOMES
13702 SOUTH 200 WEST, SUITE B12
DRAPER, UTAH 84020
PH: 801-494-0150

FOCUS©
ENGINEERING AND SURVEYING, LLC
6949 SOUTH HIGH TECH DRIVE SUITE 200
MIDVALE, UT 84047 PH: (801) 352-0075
www.focusutah.com

Z:_2020\20-0169 Lakefront at Vineyard Town Center South Redesign\design 20-0169\dwg\sheets\FINAL PLATS\PHASE 1E\C2.0 Final Plat Phase 1E BLDG R.dwg

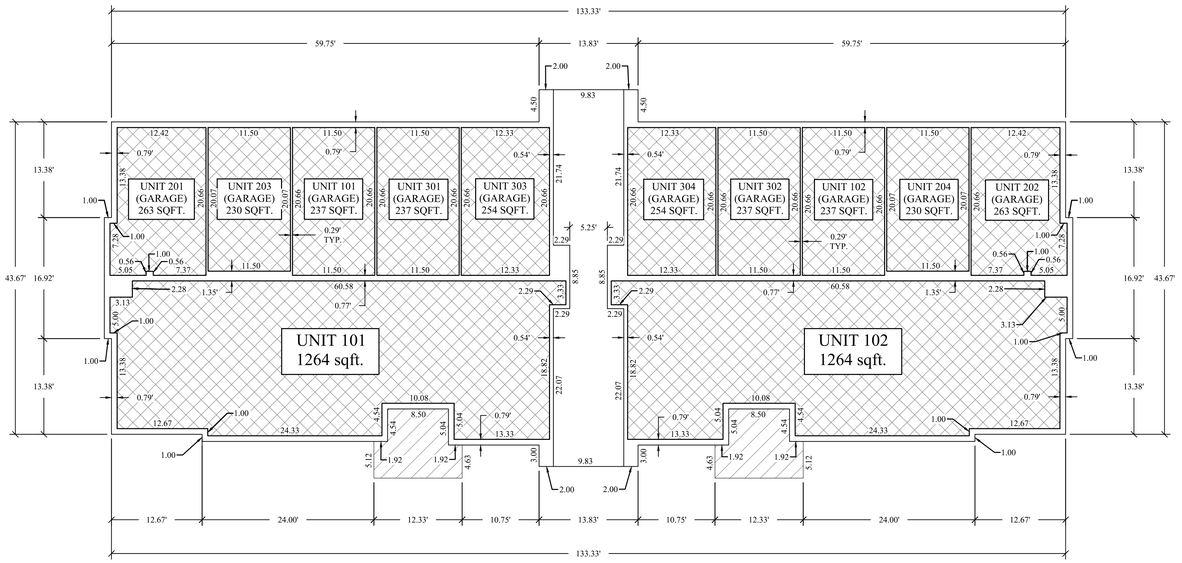

MAIN FLOOR

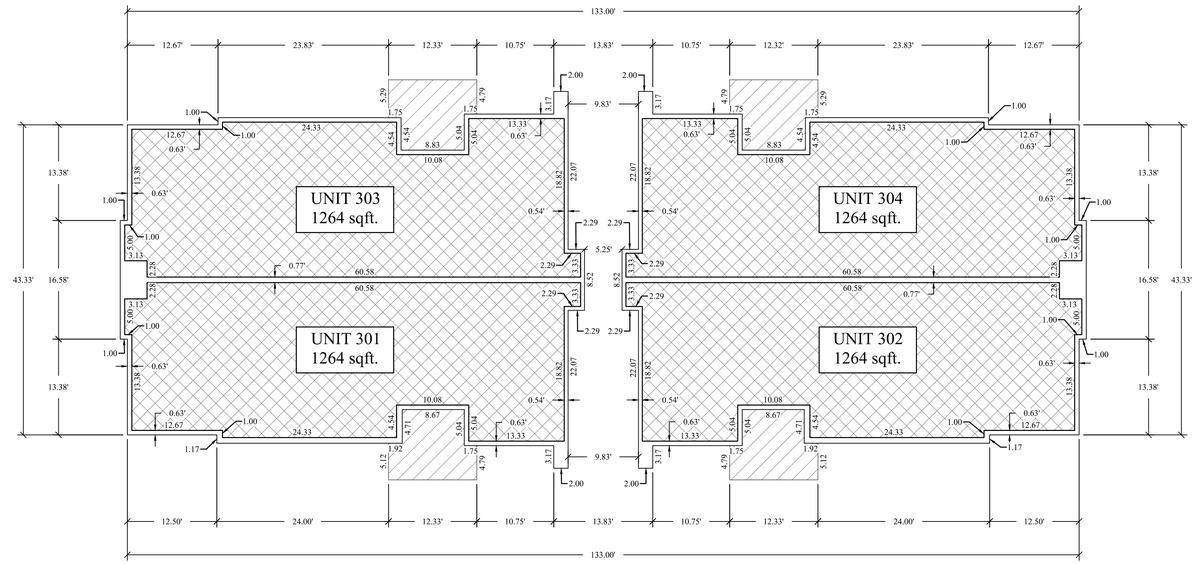

THIRD FLOOR

CONDOMINIUM DETAILS
BLDG. R

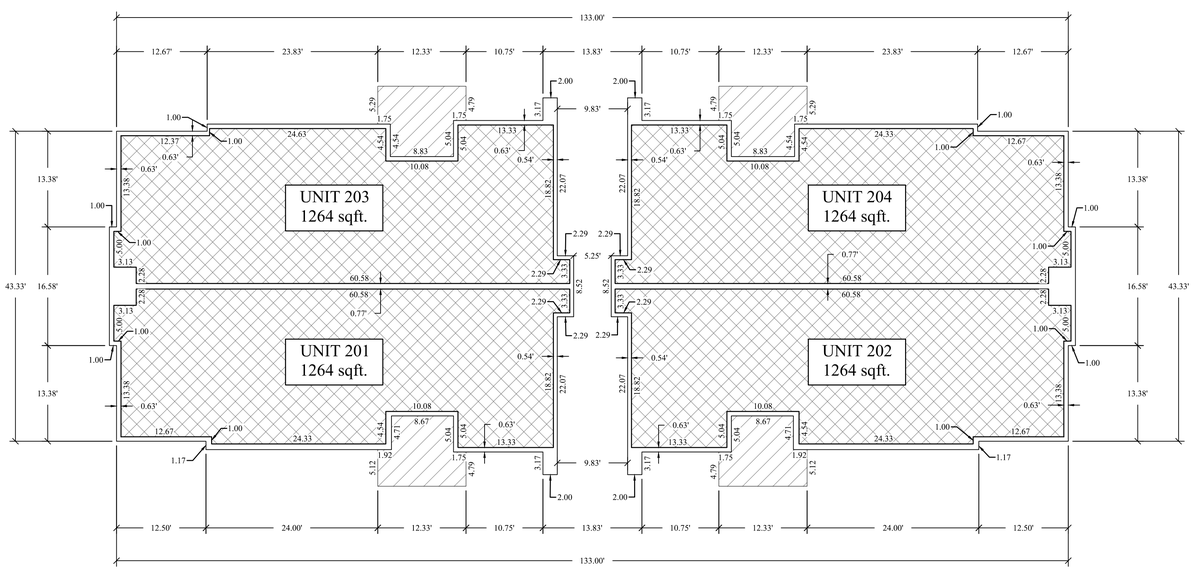

SECOND FLOOR

NOTES

1. ALL BUILDING WALLS ARE PARALLEL AND PERPENDICULAR TO REFERENCE BEARING SHOWN ON PLATS.

2. ALL AREAS ARE COMMON AREAS AND FACILITIES EXCEPT AS OTHERWISE SPECIFICALLY DESIGNATED.

ADDRESS TABLE

BUILDING NO.	UNIT NO.	ADDRESS
R	101	
R	102	
R	201	
R	202	
R	203	
R	204	
R	301	
R	302	
R	303	
R	304	

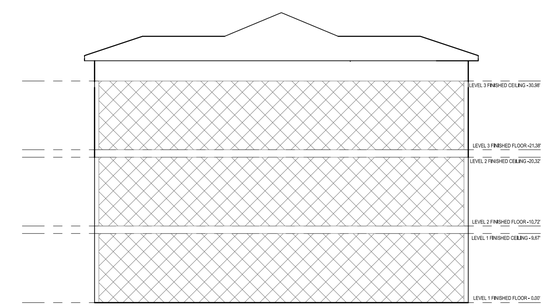

LIMITS OF COMMON AREA & PUE

LIMITS OF PRIVATE OWNERSHIP

LIMITS OF LIMITED COMMON AREA & PUE

GRAPHIC SCALE

10 0 5 10 20 40

(IN FEET)
1 inch = 10 ft.

LAKEFRONT @ VINEYARD TOWN CENTER

PHASE 1E, PLAT R CONDOMINIUMS

(AMENDING PORTIONS OF LOT 4, GENEVA PARK WEST SUBDIVISION)
PORTIONS OF SECTION 7, T6S, R2E,
SALT LAKE BASE & MERIDIAN
VINEYARD CITY, UTAH COUNTY, UTAH

2 OF 2	07/09/2020	SCALE: 1" = 10'

PREPARED FOR
EDGE HOMES
13702 SOUTH 200 WEST, SUITE B12
DRAPER, UTAH 84020
PH: 801-494-0150

FOCUS©
ENGINEERING AND SURVEYING, LLC
6949 SOUTH HIGH TECH DRIVE SUITE 200
MIDVALE, UT 84047 PH: (801) 352-0075
www.focusutah.com

SURVEYOR'S SEAL	CLERK - RECORDER SEAL		

Z:_2020\20-0169 Lakefront at Vineyard Town Center South Redesign\design 20-0169\dwg\sheets\FINAL PLATS\PHASE 1E\C2.1 Final Plat Phase 1E BLDG R.dwg

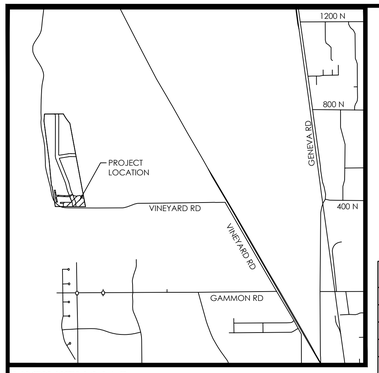

VICINITY MAP

N.T.S

NOTES

1. #5 X 24" REBAR & CAP (FOCUS ENG) TO BE SET AT ALL LOT CORNERS. NAILS OR PLUGS TO BE SET IN TOP BACK OF CURB AT EXTENSION OF SIDE LOT LINES, IN LIEU OF REBAR AND CAPS AT FRONT LOT CORNERS.
2. ALL PUBLIC UTILITY EASEMENTS PLATTED HEREON ARE IN PERPETUITY FOR INSTALLATION, MAINTENANCE, REPAIR AND REPLACEMENT OF PUBLIC UTILITIES, SIDEWALKS AND APPURTENANT PARTS THEREOF AND THE RIGHT TO REASONABLE ACCESS TO GRANTOR'S PROPERTY FOR THE ABOVE DESCRIBED PURPOSES. THE EASEMENT SHALL RUN WITH THE REAL PROPERTY AND SHALL BE BINDING UPON THE GRANTOR AND THE GRANTOR'S SUCCESSORS, HEIRS, AND ASSIGNS.
3. ALL COMMON AREAS AND STREETS OR DRIVES TO SERVE AS PUBLIC UTILITY EASEMENTS.
4. ALL AREAS ARE COMMON AREAS AND FACILITIES EXCEPT AS OTHERWISE SPECIFICALLY DESIGNATED.
5. PLAT MUST BE RECORDED WITHIN 12 MONTHS OF FINAL PLAT APPROVAL, OR FOR PHASED DEVELOPMENTS, WITHIN 24 MONTHS OF RECORDATION OF MOST RECENT PHASE. THE FIRST FINAL PLAT APPROVAL WAS GRANTED ON THE ____ DAY OF ____, 20 __.
6. THE INSTALLATION OF IMPROVEMENTS SHALL CONFORM TO ALL CITY STANDARDS, RESOLUTIONS AND ORDINANCES.
7. BUILDING PERMITS WILL NOT BE ISSUED UNTIL ALL IMPROVEMENTS HAVE BEEN INSTALLED AND ACCEPTED BY THE CITY IN WRITING OR BONDED FOR.
8. BUILDING PERMITS WILL NOT BE ISSUED UNTIL ALL IMPACT AND CONNECTION FEES ARE PAID IN FULL PER CITY REGULATIONS IN EFFECT AT THE TIME OF BUILDING PERMIT ISSUANCE.
9. NO CITY MAINTENANCE SHALL BE PROVIDED FOR STREETS DESIGNATED AS "PRIVATE" ON THIS PLAT.
10. DRIVEWAYS AND LOT ACCESS SHALL BE LIMITED TO INTERIOR LOCAL SUBDIVISION STREETS ONLY.
11. DRAINAGE SHALL NOT CROSS PROPERTY LINES. EXCESS OR CONCENTRATED DRAINAGE SHALL BE CONTAINED ON SITE OR DIRECTED TO AN APPROVED DRAINAGE FACILITY.
12. VINEYARD ACCEPTS NO RESPONSIBILITY FOR ANY PROPERTY DAMAGE CAUSED BY GROUND WATER FLOODING.
13. ALL BUILDINGS AND DEVELOPMENT SHALL BE IN CONFORMANCE WITH THE VINEYARD ZONING ORDINANCE.
14. VINEYARD TOWN CENTER MASTER ASSOCIATION,
    13702 S. 200 W., DRAPER , UT. 84020

ROCKY MOUNTAIN POWER

1. PURSUANT TO UTAH CODE ANN. 54-3-27 THIS PLAT CONVEYS TO THE OWNER(S) OR OPERATORS OF UTILITY FACILITIES A PUBLIC UTILITY EASEMENT ALONG WITH ALL THE RIGHTS AND DUTIES DESCRIBED THEREIN.
2. PURSUANT TO UTAH CODE ANN. 17-27a-603(4)(c)(ii) ROCKY MOUNTAIN POWER ACCEPTS DELIVERY OF THE PUE AS DESCRIBED IN THIS PLAT AND APPROVES THIS PLAT SOLELY FOR THE PURPOSE OF CONFIRMING THAT THE PLAT CONTAINS PUBLIC UTILITY EASEMENTS AND APPROXIMATES THE LOCATION OF THE PUBLIC UTILITY EASEMENTS, BUT DOES NOT WARRANT THEIR PRECISE LOCATION. ROCKY MOUNTAIN POWER MAY REQUIRE OTHER EASEMENTS IN ORDER TO SERVE THIS DEVELOPMENT. THIS APPROVAL DOES NOT AFFECT ANY RIGHT THAT ROCKY MOUNTAIN POWER HAS UNDER:
   a. A RECORDED EASEMENT OR RIGHT-OF-WAY
   b. THE LAW APPLICABLE TO PRESCRIPTIVE RIGHTS
   c. TITLE 54, CHAPTER 8a, DAMAGE TO UNDERGROUND UTILITY FACILITIES OR
   d. ANY OTHER PROVISION OF LAW

DOMINION ENERGY CORPORATION

DOMINION ENERGY CORPORATION APPROVES THIS PLAT SOLELY FOR THE PURPOSE OF CONFIRMING THAT THE PLAT CONTAINS PUBLIC UTILITY EASEMENTS. DOMINION ENERGY CORPORATION MAY REQUIRE OTHER EASEMENTS IN ORDER TO SERVE THIS DEVELOPMENT. THIS APPROVAL DOES NOT CONSTITUTE ABROGATION OR WAIVER OF ANY OTHER EXISTING RIGHTS, OBLIGATIONS OR LIABILITIES PROVIDE BY LAW OR EQUITY. THIS APPROVAL DOES NOT CONSTITUTE ACCEPTANCE, APPROVAL OR ACKNOWLEDGEMENT OF ANY TERMS CONTAINED IN THE PLAT, INCLUDING THOSE SET FORTH IN THE OWNERS DEDICATION AND THE NOTES AND DOES NOT CONSTITUTE A GUARANTEE OF PARTICULAR TERMS OF NATURAL GAS SERVICE. FOR FURTHER INFORMATION PLEASE CONTACT DOMINION ENERGY CORPORATION'S RIGHT-OF-WAY DEPARTMENT AT 800-366-8532.

LEGEND

- BOUNDARY
- SECTION LINE
- EASEMENT
- RIGHT-OF-WAY LINE
- BUILDING SETBACK
- EXISTING PROPERTY LINE
- #5 REBAR AND CAP (FOCUS ENG.) TO BE SET
- SECTION MONUMENT (FOUND)
- LIMITS OF COMMON AREA & PUE
- LIMITS OF PRIVATE OWNERSHIP
- LIMITS OF LIMITED COMMON AREA & PUE

Curve Table

CURVE	RADIUS	DELTA	LENGTH	CHORD DIRECTION	CHORD LENGTH
C1	1000.00	0°27'12"	7.91	S88°23'50"E	7.91
C2	1000.00	1°22'19"	23.94	S89°18'36"E	23.94
C3	215.00	11°16'13"	42.29	N84°22'08"E	42.22
C4	215.00	1°43'28"	6.47	N77°52'18"E	6.47

Line Table

LINE	DIRECTION	LENGTH
L1	S23°06'49"W	16.50

LAKEFRONT @ VINEYARD TOWN CENTER
PHASE 1E, PLAT S
CONDOMINIUMS
(AMENDING PORTIONS OF LOT 4, GENEVA PARK WEST SUBDIVISION)
PORTIONS OF SECTION 7, T6S, R2E,
SALT LAKE BASE & MERIDIAN
VINEYARD CITY, UTAH COUNTY, UTAH

GRAPHIC SCALE

20 0 10 20 40 80

(IN FEET)
1 inch = 20 ft.

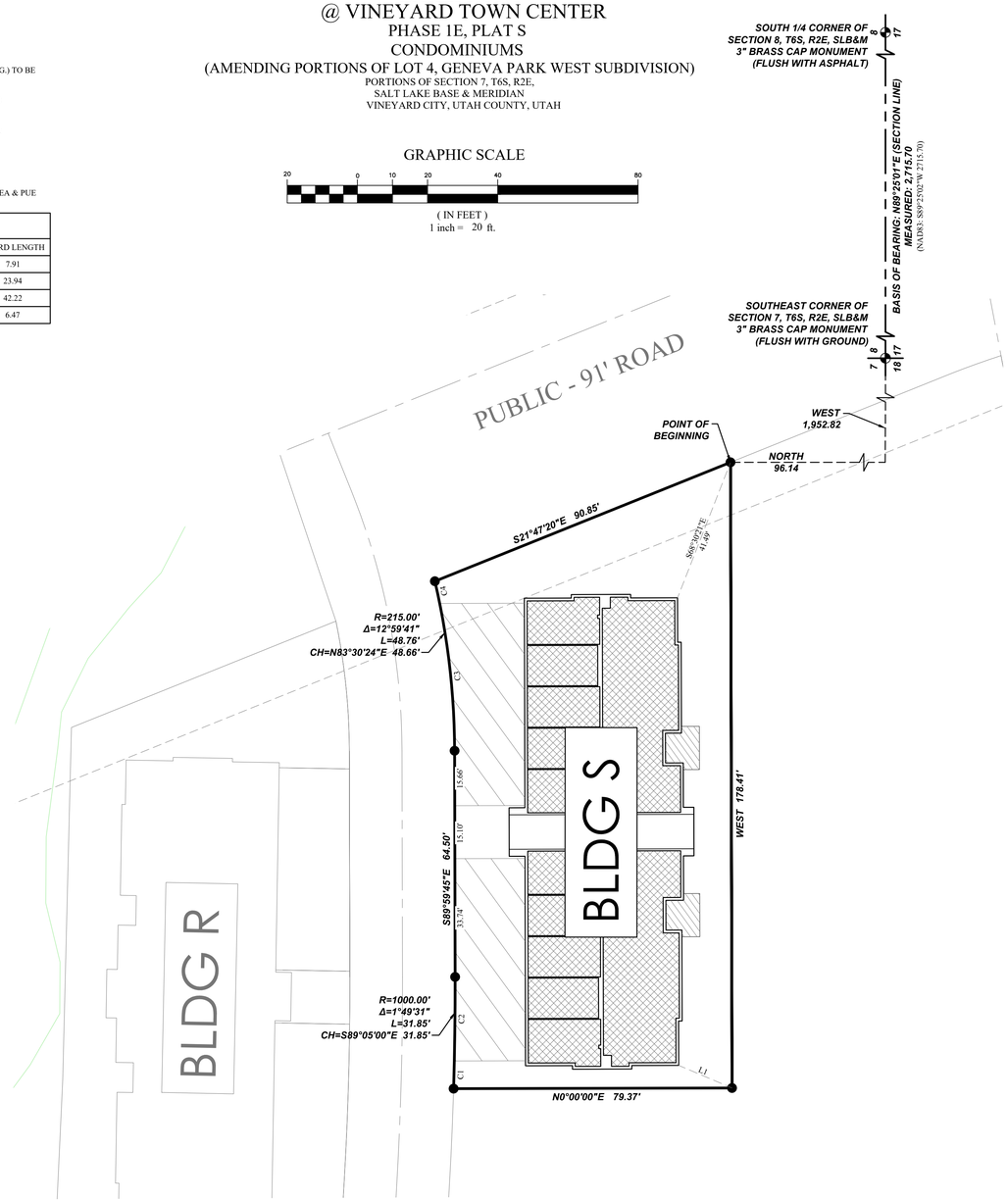

SURVEYOR'S CERTIFICATE

KNOWN ALL MEN BY THESE PRESENTS: I, SPENCER W. LLEWELYN, DO HEREBY CERTIFY THAT I AM A PROFESSIONAL LAND SURVEYOR, AND THAT I HOLD CERTIFICATE NO. #10516507 AS PRESCRIBED UNDER THE LAWS OF THE STATE OF UTAH. I FURTHER CERTIFY THAT AT THE REQUEST OF THE OWNER OF THE BELOW DESCRIBED LAND, I PERFORMED A SURVEY OF SAID LAND, THAT THE DESCRIPTION BELOW CORRECTLY DESCRIBES THE LAND SURFACE UPON WHICH WILL BE CONSTRUCTED , AND THIS RECORD OF SURVEY MAP, CONSISTING OF THREE (3) PAGES IS ACCURATE AND COMPLIES WITH THE PROVISIONS OF SECTION 57-8-13 (1) OF THE UTAH CONDOMINIUM OWNERSHIP ACT. I FURTHER CERTIFY THAT THE REFERENCE MARKERS SHOWN ON THIS PLAT ARE LOCATED AS SHOWN AND ARE SUFFICIENT TO READILY RETRACE OR RE-ESTABLISH THIS SURVEY.

Spencer W. Llewelyn
Professional Land Surveyor
Certificate No. 10516507

Date

BOUNDARY DESCRIPTION

A portion of Lot 4, GENEVA PARK WEST, according to the Official Plat thereof recorded March 14, 2013 as Entry No. 24721:2013 in the Office of the Utah County Recorder, located in the South Half of Section 7, Township 6 South, Range 2 East, Salt Lake Base & Meridian, in Vineyard, Utah, more particularly described as follows:

Beginning at a point located West 1,952.82 feet and North 96.14 feet from the Southeast Corner of Section 7, T6S, R2E, SLB&M (Basis of Bearing: S89°25'01"W along the Section line from the South 1/4 Corner of Section 8 to the Southeast Corner of Section 7, T6S, R2E, SLB&M); thence West 178.41 feet; thence North 79.37 feet; thence Easterly along the arc of a non-tangent curve to the left having a radius of 1,000.00 feet (radius bears: N01°49'45"E) a distance of 31.85 feet through a central angle of 01°49'31" Chord: S88°05'00"E 31.85 feet; thence S89°59'45"E 64.50 feet; thence along the arc of a curve to the left with a radius of 215.00 feet a distance of 48.76 feet through a central angle of 12°59'41" Chord: N83°30'24"E 48.66 feet; thence S21°47'20"E 90.85 feet to the point of beginning.

Contains: 12,926 square feet or 0.30 acres+/-

OWNER'S DEDICATION

KNOW ALL MEN BY THESE PRESENT THAT WE, ALL OF THE UNDERSIGNED OWNERS OF ALL OF THE TRACT OF LAND DESCRIBED HEREWITH AS

LAKEFRONT @ VINEYARD TOWN CENTER
PHASE 1E, PLAT S
CONDOMINIUMS

A UTAH CONDOMINIUM PROJECT LOCATED ON SAID TRACT OF LAND, HAVING CAUSED A SURVEY TO BE MADE AND THIS RECORD OF SURVEY MAP TO BE PREPARED, DO HEREBY GIVE OUR CONSENT TO THE RECORDATION OF THIS RECORD OF SURVEY MAP AND SUBMIT THIS PROPERTY TO THE UTAH CONDOMINIUM OWNERSHIP ACT.
FURTHERMORE, WE DO HEREBY CONVEY TO ALL PUBLIC UTILITY AGENCIES, THEIR SUCCESSORS AND ASSIGNS, PERMANENT EASEMENTS AS SHOWN BY THE AREA MARKED "UTILITY EASEMENT" ON THE WITHIN PLAT FOR THE CONSTRUCTION AND MAINTENANCE OF ELECTRICAL, TELEPHONE, NATURAL GAS, SEWER AND WATER LINES AND APPURTENANCES, TOGETHER WITH THE RIGHT OF ACCESS THERETO

IN WITNESS WHEREOF, WE HAVE HEREUNTO SET OUR HANDS THIS _____ DAY OF _____ A.D. 20____

EDGE VINEYARD SHORES, LLC
STEVE MADDOX, MANAGER

LIMITED LIABILITY ACKNOWLEDGMENT

STATE OF UTAH
S.S.
COUNTY OF _____

ON THE ____ DAY OF _____ A.D. 20____ PERSONALLY APPEARED BEFORE ME , THE UNDERSIGNED NOTARY PUBLIC, IN AND FOR THE COUNTY OF _____, IN SAID STATE OF UTAH, _____, WHO AFTER BEING DULY SWORN, ACKNOWLEDGED TO ME THAT HE/SHE IS THE _____ OF _____ L.L.C., A UTAH L.L.C. AND THAT HE/SHE SIGNED THE OWNER'S DEDICATION FREELY AND VOLUNTARILY FOR AND IN BEHALF OF SAID LIMITED LIABILITY COMPANY FOR THE PURPOSES THEREIN MENTIONED.

MY COMMISSION EXPIRES:_____

A NOTARY PUBLIC COMMISSIONED IN UTAH RESIDING IN _____ COUNTY

MY COMMISSION No._____

PRINTED FULL NAME OF NOTARY

ACCEPTANCE BY LEGISLATIVE BODY

THE LEGISLATIVE BODY OF VINEYARD CITY OF UTAH COUNTY, APPROVES THIS SUBDIVISION AND HEREBY ACCEPTS THE DEDICATION OF ALL STREETS, EASEMENTS, AND OTHER PARCELS OF LAND INTENDED FOR PUBLIC PURPOSES FOR THE PERPETUAL USE OF THE PUBLIC THIS ____ DAY OF _____ 20___.

VINEYARD PLANNING COMMISSION CHAIR DATE: ____/____/_____	CITY ENGINEER DATE: ____/____/_____
CITY MANAGER DATE: ____/____/_____	CLERK/RECORDER DATE: ____/____/_____
CITY ATTORNEY DATE: ____/____/_____	

LAKEFRONT
@ VINEYARD TOWN CENTER
PHASE 1E, PLAT S
CONDOMINIUMS
(AMENDING PORTIONS OF LOT 4, GENEVA PARK WEST SUBDIVISION)
PORTIONS OF SECTION 7, T6S, R2E,
SALT LAKE BASE & MERIDIAN
VINEYARD CITY, UTAH COUNTY, UTAH

1 OF 2	07/09/20	SCALE: 1" = 20'	SURVEYOR'S SEAL	CLERK - RECORDER SEAL		

PREPARED FOR
EDGE HOMES
13702 SOUTH 200 WEST, SUITE B12
DRAPER, UTAH 84020
PH: 801-494-0150

FOCUS ©
ENGINEERING AND SURVEYING, LLC
6949 SOUTH HIGH TECH DRIVE SUITE 200
MIDVALE, UT 84047 PH: (801) 352-0075
www.focusutah.com

Z:_2020\20-0169 Lakefront at Vineyard Town Center South Redesign\design 20-0169\dwg\sheets\FINAL PLATS\PHASE 1E\C2.0 Final Plat Phase 1E BLDG S.dwg

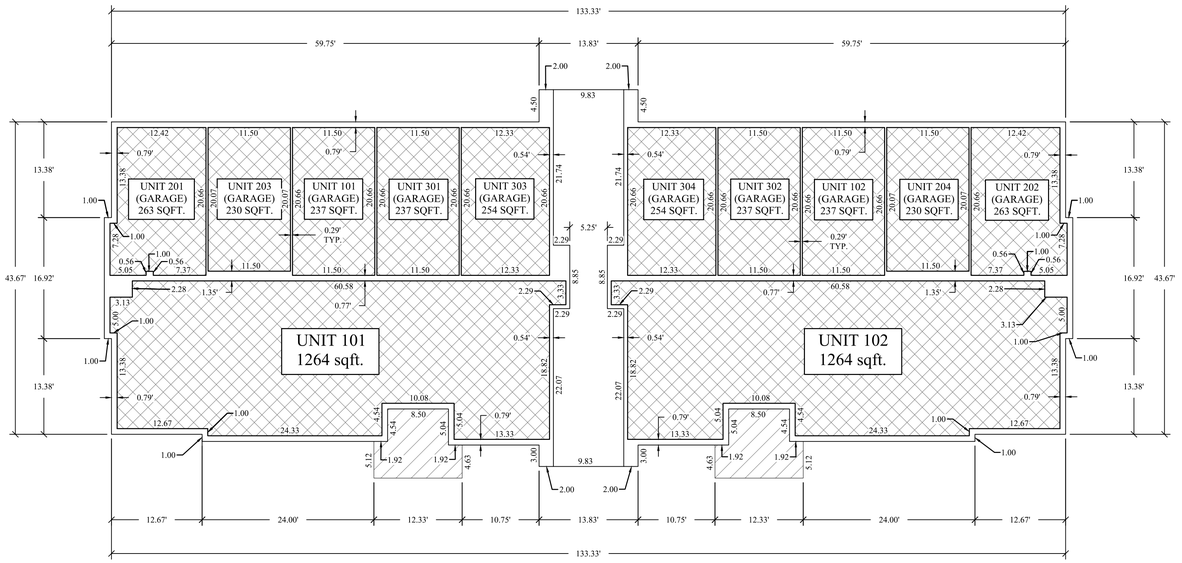

MAIN FLOOR

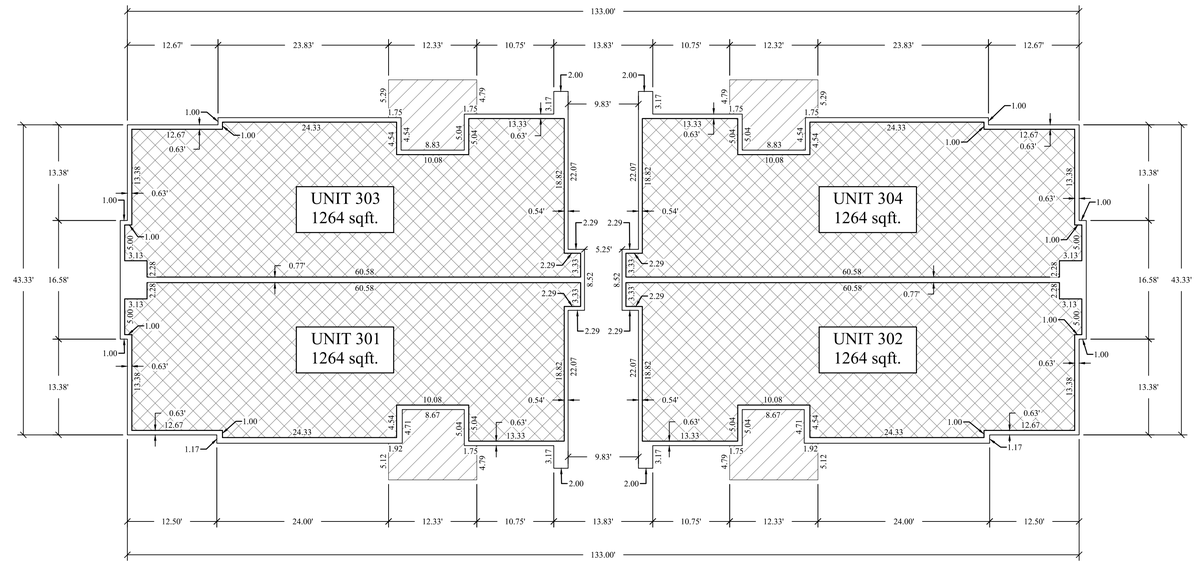

THIRD FLOOR

CONDOMINIUM DETAILS
BLDG. S

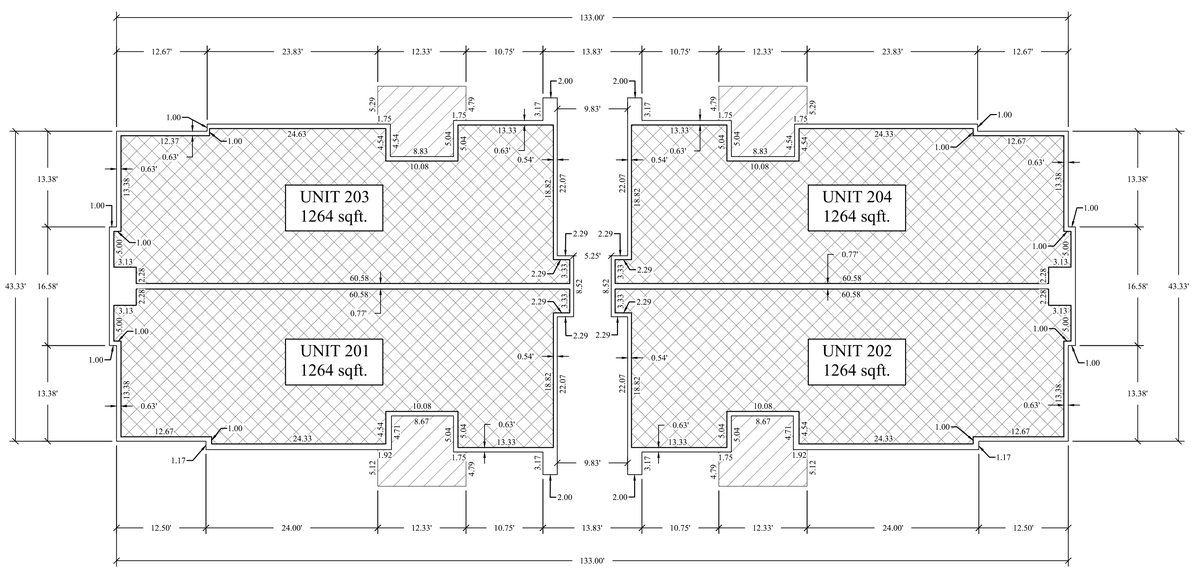

SECOND FLOOR

NOTES

1. ALL BUILDING WALLS ARE PARALLEL AND PERPENDICULAR TO REFERENCE BEARING SHOWN ON PLATS.

2. ALL AREAS ARE COMMON AREAS AND FACILITIES EXCEPT AS OTHERWISE SPECIFICALLY DESIGNATED.

ADDRESS TABLE

BUILDING NO.	UNIT NO.	ADDRESS
S	101	
S	102	
S	201	
S	202	
S	203	
S	204	
S	301	
S	302	
S	303	
S	304	

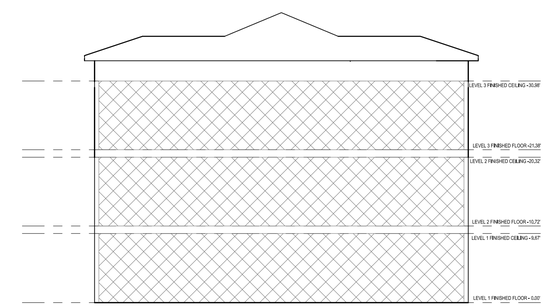

LIMITS OF COMMON AREA & PUE

LIMITS OF PRIVATE OWNERSHIP

LIMITS OF LIMITED COMMON AREA & PUE

GRAPHIC SCALE

10 0 5 10 20 40

(IN FEET)
1 inch = 10 ft.

LAKEFRONT @ VINEYARD TOWN CENTER

PHASE 1E, PLAT S CONDOMINIUMS

(AMENDING PORTIONS OF LOT 4, GENEVA PARK WEST SUBDIVISION)
PORTIONS OF SECTION 7, T6S, R2E,
SALT LAKE BASE & MERIDIAN
VINEYARD CITY, UTAH COUNTY, UTAH

2 OF 2	07/09/2020	SCALE: 1" = 10'

PREPARED FOR
EDGE HOMES
13702 SOUTH 200 WEST, SUITE B12
DRAPER, UTAH 84020
PH: 801-494-0150

FOCUS©
ENGINEERING AND SURVEYING, LLC
6949 SOUTH HIGH TECH DRIVE SUITE 200
MIDVALE, UT 84047 PH: (801) 352-0075
www.focusutah.com

SURVEYOR'S SEAL	CLERK - RECORDER SEAL		

Z:_2020\20-0169 Lakefront at Vineyard Town Center South Redesign\design 20-0169\dwg\sheets\FINAL PLATS\PHASE 1E\C2.1 Final Plat Phase 1E BLDG S.dwg

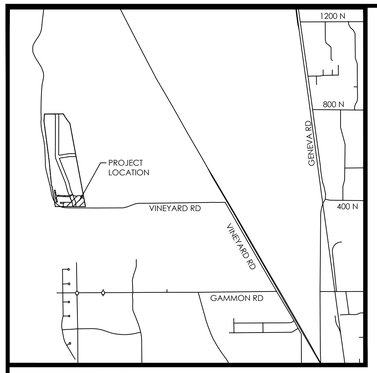

VICINITY MAP

N.T.S

NOTES

1. #5 X 24" REBAR & CAP (FOCUS ENG) TO BE SET AT ALL LOT CORNERS. NAILS OR PLUGS TO BE SET IN TOP BACK OF CURB AT EXTENSION OF SIDE LOT LINES, IN LIEU OF REBAR AND CAPS AT FRONT LOT CORNERS.
2. ALL PUBLIC UTILITY EASEMENTS PLATTED HEREON ARE IN PERPETUITY FOR INSTALLATION, MAINTENANCE, REPAIR AND REPLACEMENT OF PUBLIC UTILITIES, SIDEWALKS AND APPURTENANT PARTS THEREOF AND THE RIGHT TO REASONABLE ACCESS TO GRANTOR'S PROPERTY FOR THE ABOVE DESCRIBED PURPOSES. THE EASEMENT SHALL RUN WITH THE REAL PROPERTY AND SHALL BE BINDING UPON THE GRANTOR AND THE GRANTOR'S SUCCESSORS, HEIRS, AND ASSIGNS.
3. ALL COMMON AREAS AND STREETS OR DRIVES TO SERVE AS PUBLIC UTILITY EASEMENTS.
4. ALL AREAS ARE COMMON AREAS AND FACILITIES EXCEPT AS OTHERWISE SPECIFICALLY DESIGNATED.
5. PLAT MUST BE RECORDED WITHIN 12 MONTHS OF FINAL PLAT APPROVAL, OR FOR PHASED DEVELOPMENTS, WITHIN 24 MONTHS OF RECORDATION OF MOST RECENT PHASE. THE FIRST FINAL PLAT APPROVAL WAS GRANTED ON THE ____ DAY OF ____, 20 _.
6. THE INSTALLATION OF IMPROVEMENTS SHALL CONFORM TO ALL CITY STANDARDS, RESOLUTIONS AND ORDINANCES.
7. BUILDING PERMITS WILL NOT BE ISSUED UNTIL ALL IMPROVEMENTS HAVE BEEN INSTALLED AND ACCEPTED BY THE CITY IN WRITING OR BONDED FOR.
8. BUILDING PERMITS WILL NOT BE ISSUED UNTIL ALL IMPACT AND CONNECTION FEES ARE PAID IN FULL PER CITY REGULATIONS IN EFFECT AT THE TIME OF BUILDING PERMIT ISSUANCE.
9. NO CITY MAINTENANCE SHALL BE PROVIDED FOR STREETS DESIGNATED AS "PRIVATE" ON THIS PLAT.
10. DRIVEWAYS AND LOT ACCESS SHALL BE LIMITED TO INTERIOR LOCAL SUBDIVISION STREETS ONLY.
11. DRAINAGE SHALL NOT CROSS PROPERTY LINES. EXCESS OR CONCENTRATED DRAINAGE SHALL BE CONTAINED ON SITE OR DIRECTED TO AN APPROVED DRAINAGE FACILITY.
12. VINEYARD ACCEPTS NO RESPONSIBILITY FOR ANY PROPERTY DAMAGE CAUSED BY GROUND WATER FLOODING.
13. ALL BUILDINGS AND DEVELOPMENT SHALL BE IN CONFORMANCE WITH THE VINEYARD ZONING ORDINANCE.
14. VINEYARD TOWN CENTER MASTER ASSOCIATION, 13702 S. 200 W., DRAPER , UT. 84020

ROCKY MOUNTAIN POWER

1. PURSUANT TO UTAH CODE ANN. 54-3-27 THIS PLAT CONVEYS TO THE OWNER(S) OR OPERATORS OF UTILITY FACILITIES A PUBLIC UTILITY EASEMENT ALONG WITH ALL THE RIGHTS AND DUTIES DESCRIBED THEREIN.
2. PURSUANT TO UTAH CODE ANN. 17-27a-603(4)(e)(ii) ROCKY MOUNTAIN POWER ACCEPTS DELIVERY OF THE PUE AS DESCRIBED IN THIS PLAT AND APPROVES THIS PLAT SOLELY FOR THE PURPOSE OF CONFIRMING THAT THE PLAT CONTAINS PUBLIC UTILITY EASEMENTS AND APPROXIMATES THE LOCATION OF THE PUBLIC UTILITY EASEMENTS, BUT DOES NOT WARRANT THEIR PRECISE LOCATION. ROCKY MOUNTAIN POWER MAY REQUIRE OTHER EASEMENTS IN ORDER TO SERVE THIS DEVELOPMENT. THIS APPROVAL DOES NOT AFFECT ANY RIGHT THAT ROCKY MOUNTAIN POWER HAS UNDER:
   a. A RECORDED EASEMENT OR RIGHT-OF-WAY
   b. THE LAW APPLICABLE TO PRESCRIPTIVE RIGHTS
   c. TITLE 54, CHAPTER 8a, DAMAGE TO UNDERGROUND UTILITY FACILITIES OR
   d. ANY OTHER PROVISION OF LAW

DOMINION ENERGY CORPORATION

DOMINION ENERGY CORPORATION APPROVES THIS PLAT SOLELY FOR THE PURPOSE OF CONFIRMING THAT THE PLAT CONTAINS PUBLIC UTILITY EASEMENTS. DOMINION ENERGY CORPORATION MAY REQUIRE OTHER EASEMENTS IN ORDER TO SERVE THIS DEVELOPMENT. THIS APPROVAL DOES NOT CONSTITUTE ABROGATION OR WAIVER OF ANY OTHER EXISTING RIGHTS, OBLIGATIONS OR LIABILITIES PROVIDE BY LAW OR EQUITY. THIS APPROVAL DOES NOT CONSTITUTE ACCEPTANCE, APPROVAL OR ACKNOWLEDGEMENT OF ANY TERMS CONTAINED IN THE PLAT, INCLUDING THOSE SET FORTH IN THE OWNERS DEDICATION AND THE NOTES AND DOES NOT CONSTITUTE A GUARANTEE OF PARTICULAR TERMS OF NATURAL GAS SERVICE. FOR FURTHER INFORMATION PLEASE CONTACT DOMINION ENERGY CORPORATION'S RIGHT-OF-WAY DEPARTMENT AT 800-366-8532.

LEGEND

- BOUNDARY
- SECTION LINE
- EASEMENT
- RIGHT-OF-WAY LINE
- BUILDING SETBACK
- EXISTING PROPERTY LINE
- SECTION MONUMENT (FOUND)
- LIMITS OF COMMON AREA & PUE
- LIMITS OF PRIVATE OWNERSHIP
- LIMITS OF LIMITED COMMON AREA & PUE

Curve Table

CURVE	RADIUS	DELTA	LENGTH	CHORD DIRECTION	CHORD LENGTH
C1	1000.00	1°19'49"	23.22	S87°12'31"E	23.22
C2	1000.00	0°17'49"	5.18	S88°01'20"E	5.18

Line Table

LINE	DIRECTION	LENGTH
L1	S25°51'53"E	17.40

LAKEFRONT @ VINEYARD TOWN CENTER
PHASE 1E, PLAT T
CONDOMINIUMS
(AMENDING PORTIONS OF LOT 4, GENEVA PARK WEST SUBDIVISION)
PORTIONS OF SECTION 7, T6S, R2E,
SALT LAKE BASE & MERIDIAN
VINEYARD CITY, UTAH COUNTY, UTAH

GRAPHIC SCALE

20 0 10 20 40 80

(IN FEET)
1 inch = 20 ft.

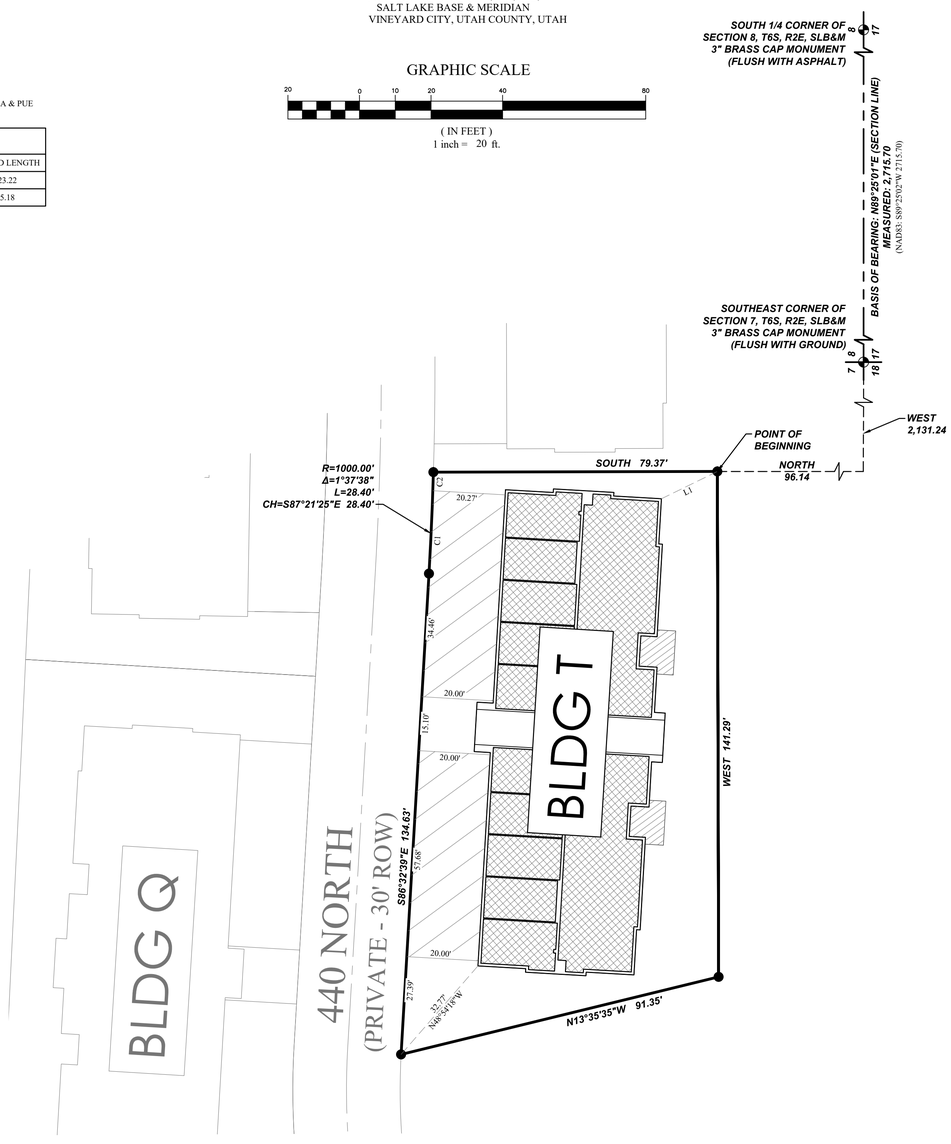

SURVEYOR'S CERTIFICATE

KNOWN ALL MEN BY THESE PRESENTS: I, SPENCER W. LLEWELYN, DO HEREBY CERTIFY THAT I AM A PROFESSIONAL LAND SURVEYOR, AND THAT I HOLD CERTIFICATE NO. #10516507 AS PRESCRIBED UNDER THE LAWS OF THE STATE OF UTAH. I FURTHER CERTIFY THAT AT THE REQUEST OF THE OWNER OF THE BELOW DESCRIBED LAND, I PERFORMED A SURVEY OF SAID LAND, THAT THE DESCRIPTION BELOW CORRECTLY DESCRIBES THE LAND SURFACE UPON WHICH WILL BE CONSTRUCTED , AND THIS RECORD OF SURVEY MAP, CONSISTING OF THREE (3) PAGES IS ACCURATE AND COMPLIES WITH THE PROVISIONS OF SECTION 57-8-13 (1) OF THE UTAH CONDOMINIUM OWNERSHIP ACT. I FURTHER CERTIFY THAT THE REFERENCE MARKERS SHOWN ON THIS PLAT ARE LOCATED AS SHOWN AND ARE SUFFICIENT TO READILY RETRACE OR RE-ESTABLISH THIS SURVEY.

Spencer W. Llewelyn
Professional Land Surveyor
Certificate No. 10516507

Date

BOUNDARY DESCRIPTION

A portion of Lot 4, GENEVA PARK WEST, according to the Official Plat thereof recorded March 14, 2013 as Entry No. 24721:2013 in the Office of the Utah County Recorder, located in the South Half of Section 7, Township 6 South, Range 2 East, Salt Lake Base & Meridian, in Vineyard, Utah, more particularly described as follows:

Beginning at a point located West 2,131.24 feet and North 96.14 feet from the Southeast Corner of Section 7, T6S, R2E, SLB&M (Basis of Bearing: S89°25'01"W along the Section line from the South 1/4 Corner of Section 8 to the Southeast Corner of Section 7, T6S, R2E, SLB&M); thence West 141.29 feet; thence N13°35'35"W 91.35 feet; thence S86°32'39"E 134.63 feet; thence Easterly along the arc of a non-tangent curve to the left having a radius of 1,000.00 feet (radius bears: N03°27'24"E) a distance of 28.40 feet through a central angle of 01°37'38" Chord: S87°21'25"E 28.40 feet; thence South 79.37 feet to the point of beginning.

Contains: 12,702 square feet or 0.29 acres+/-

OWNER'S DEDICATION

KNOW ALL MEN BY THESE PRESENT THAT WE, ALL OF THE UNDERSIGNED OWNERS OF ALL OF THE TRACT OF LAND DESCRIBED HEREWITH AS

LAKEFRONT @ VINEYARD TOWN CENTER
PHASE 1E, PLAT T
CONDOMINIUMS

A UTAH CONDOMINIUM PROJECT LOCATED ON SAID TRACT OF LAND, HAVING CAUSED A SURVEY TO BE MADE AND THIS RECORD OF SURVEY MAP TO BE PREPARED, DO HEREBY GIVE OUR CONSENT TO THE RECORDATION OF THIS RECORD OF SURVEY MAP AND SUBMIT THIS PROPERTY TO THE UTAH CONDOMINIUM OWNERSHIP ACT. FURTHERMORE, WE DO HEREBY CONVEY TO ALL PUBLIC UTILITY AGENCIES, THEIR SUCCESSORS AND ASSIGNS, PERMANENT EASEMENTS AS SHOWN BY THE AREA MARKED "UTILITY EASEMENT" ON THE WITHIN PLAT FOR THE CONSTRUCTION AND MAINTENANCE OF ELECTRICAL, TELEPHONE, NATURAL GAS, SEWER AND WATER LINES AND APPURTENANCES, TOGETHER WITH THE RIGHT OF ACCESS THERETO

IN WITNESS WHEREOF, WE HAVE HEREUNTO SET OUR HANDS THIS _____ DAY OF _____ A.D. 20____

EDGE VINEYARD SHORES, LLC
STEVE MADDOX, MANAGER

LIMITED LIABILITY ACKNOWLEDGMENT

STATE OF UTAH
S.S.
COUNTY OF _____

ON THE ____ DAY OF _____ A.D. 20____ PERSONALLY APPEARED BEFORE ME , THE UNDERSIGNED NOTARY PUBLIC, IN AND FOR THE COUNTY OF _____, IN SAID STATE OF UTAH, _____, WHO AFTER BEING DULY SWORN, ACKNOWLEDGED TO ME THAT HE/SHE IS THE _____ OF _____ L.L.C., A UTAH L.L.C. AND THAT HE/SHE SIGNED THE OWNER'S DEDICATION FREELY AND VOLUNTARILY FOR AND IN BEHALF OF SAID LIMITED LIABILITY COMPANY FOR THE PURPOSES THEREIN MENTIONED.

MY COMMISSION EXPIRES:_____

A NOTARY PUBLIC COMMISSIONED IN UTAH RESIDING IN _____ COUNTY

MY COMMISSION No._____

PRINTED FULL NAME OF NOTARY

ACCEPTANCE BY LEGISLATIVE BODY

THE LEGISLATIVE BODY OF VINEYARD CITY OF UTAH COUNTY, APPROVES THIS SUBDIVISION AND HEREBY ACCEPTS THE DEDICATION OF ALL STREETS, EASEMENTS, AND OTHER PARCELS OF LAND INTENDED FOR PUBLIC PURPOSES FOR THE PERPETUAL USE OF THE PUBLIC THIS ____ DAY OF _____20___.

VINEYARD PLANNING COMMISSION CHAIR DATE: ___/___/_____	CITY ENGINEER DATE: ___/___/_____
CITY MANAGER DATE: ___/___/_____	CLERK/RECORDER DATE: ___/___/_____
CITY ATTORNEY DATE: ___/___/_____	

LAKEFRONT
@ VINEYARD TOWN CENTER
PHASE 1E, PLAT T
CONDOMINIUMS
(AMENDING PORTIONS OF LOT 4, GENEVA PARK WEST SUBDIVISION)
PORTIONS OF SECTION 7, T6S, R2E,
SALT LAKE BASE & MERIDIAN
VINEYARD CITY, UTAH COUNTY, UTAH

1 OF 2	07/09/20	SCALE: 1" = 20'	SURVEYOR'S SEAL	CLERK - RECORDER SEAL		

PREPARED FOR
EDGE HOMES
13702 SOUTH 200 WEST, SUITE B12
DRAPER, UTAH 84020
PH: 801-494-0150

FOCUS ©
ENGINEERING AND SURVEYING, LLC
6949 SOUTH HIGH TECH DRIVE SUITE 200
MIDVALE, UT 84047 PH: (801) 352-0075
www.focusutah.com

Z:_2020\20-0169 Lakefront at Vineyard Town Center South Redesign\design\dwg\sheets\FINAL PLATS\PHASE 1E\V2.0 Final Plat Phase 1E BLDG T.dwg

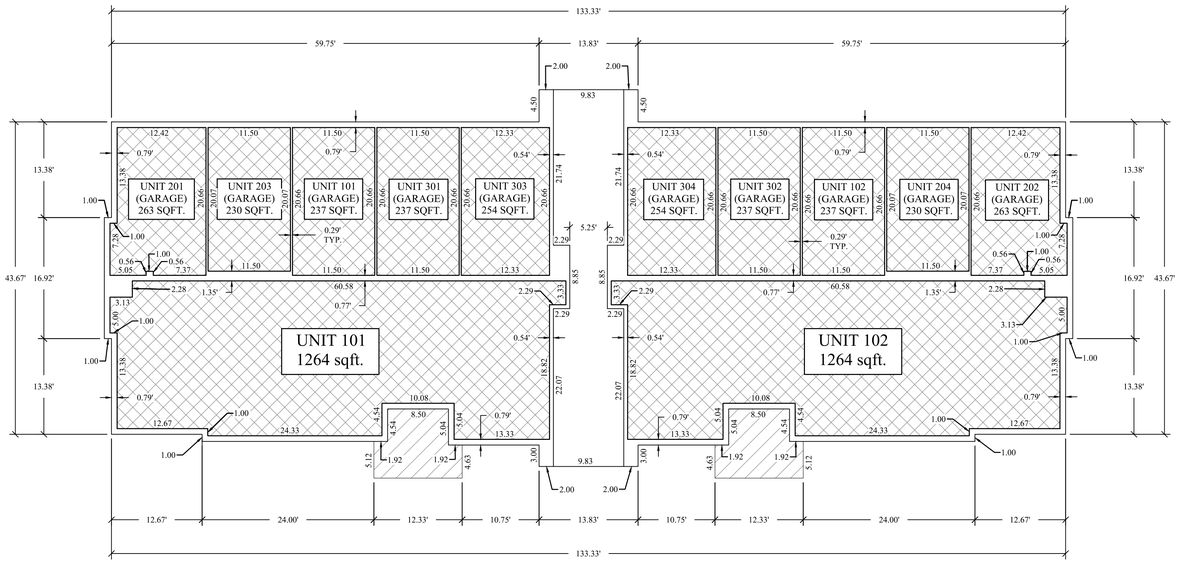

MAIN FLOOR

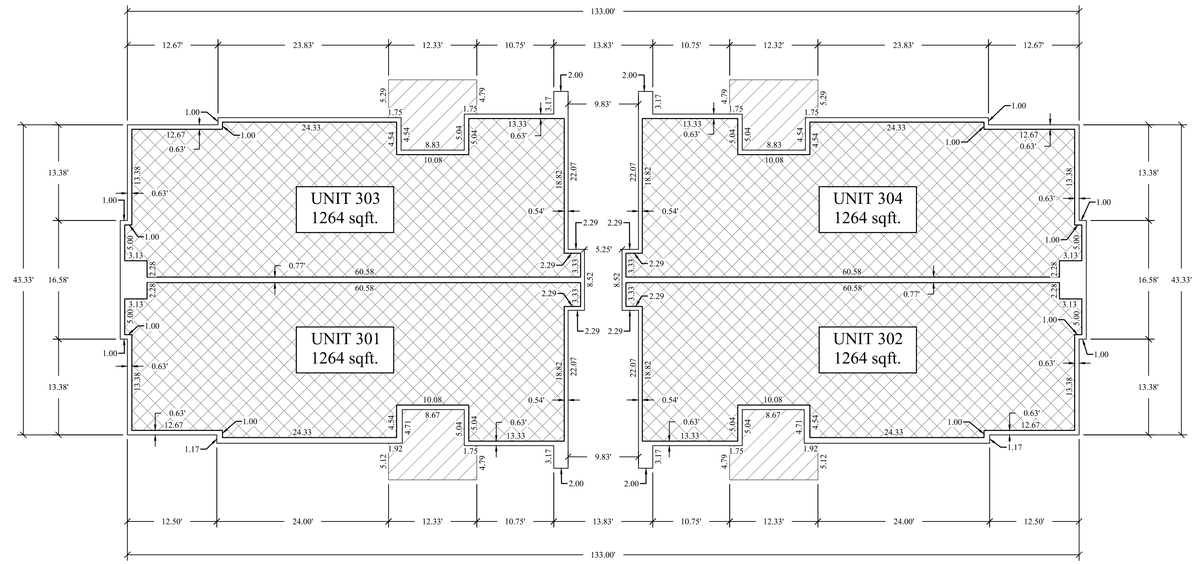

THIRD FLOOR

CONDOMINIUM DETAILS
BLDG. T

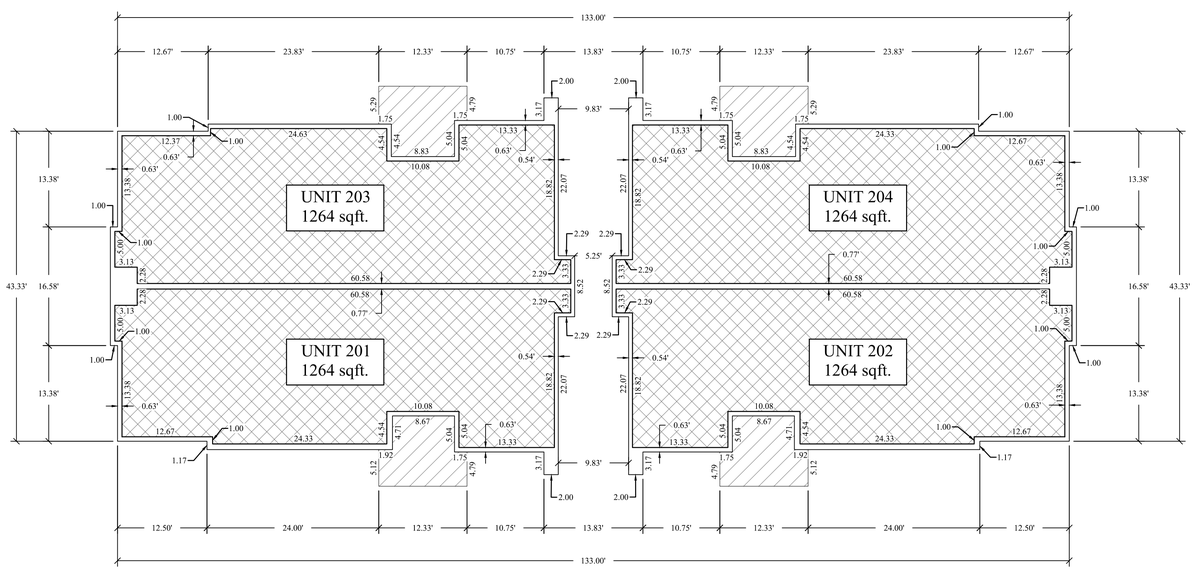

SECOND FLOOR

NOTES

1. ALL BUILDING WALLS ARE PARALLEL AND PERPENDICULAR TO REFERENCE BEARING SHOWN ON PLATS.

2. ALL AREAS ARE COMMON AREAS AND FACILITIES EXCEPT AS OTHERWISE SPECIFICALLY DESIGNATED.

ADDRESS TABLE

BUILDING NO.	UNIT NO.	ADDRESS
T	101	
T	102	
T	201	
T	202	
T	203	
T	204	
T	301	
T	302	
T	303	
T	304	

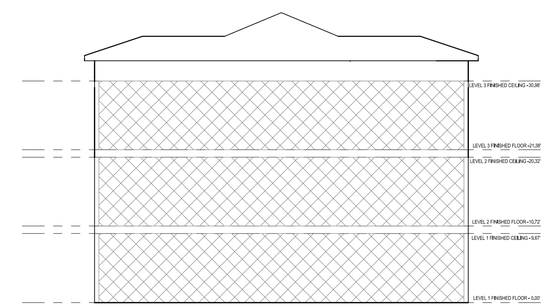

LIMITS OF COMMON AREA & PUE

LIMITS OF PRIVATE OWNERSHIP

LIMITS OF LIMITED COMMON AREA & PUE

GRAPHIC SCALE

10 0 5 10 20 40

(IN FEET)
1 inch = 10 ft.

LAKEFRONT @ VINEYARD TOWN CENTER

PHASE 1E, PLAT T CONDOMINIUMS

(AMENDING PORTIONS OF LOT 4, GENEVA PARK WEST SUBDIVISION)
PORTIONS OF SECTION 7, T6S, R2E,
SALT LAKE BASE & MERIDIAN
VINEYARD CITY, UTAH COUNTY, UTAH

2 OF 2	07/09/2020	SCALE: 1" = 10'	SURVEYOR'S SEAL	CLERK - RECORDER SEAL		

PREPARED FOR
EDGE HOMES
13702 SOUTH 200 WEST, SUITE B12
DRAPER, UTAH 84020
PH: 801-494-0150

FOCUS©
ENGINEERING AND SURVEYING, LLC
6949 SOUTH HIGH TECH DRIVE SUITE 200
MIDVALE, UT 84047 PH: (801) 352-0075
www.focusutah.com

Z:_2020\20-0169 Lakefront at Vineyard Town Center South Redesign\design 20-0169\dwg\sheets\FINAL PLATS\PHASE 1E\C2.1 Final Plat Phase 1E BLDG T.dwg

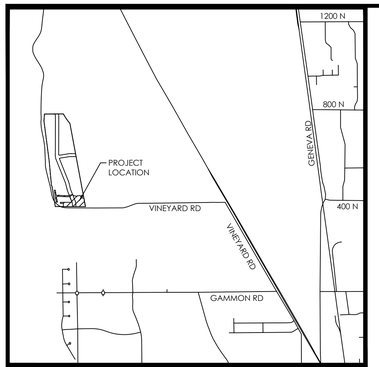

VICINITY MAP

N.T.S

NOTES

1. #5 X 24" REBAR & CAP (FOCUS ENG) TO BE SET AT ALL LOT CORNERS. NAILS OR PLUGS TO BE SET IN TOP BACK OF CURB AT EXTENSION OF SIDE LOT LINES, IN LIEU OF REBAR AND CAPS AT FRONT LOT CORNERS.
2. ALL PUBLIC UTILITY EASEMENTS PLATTED HEREON ARE IN PERPETUITY FOR INSTALLATION, MAINTENANCE, REPAIR AND REPLACEMENT OF PUBLIC UTILITIES, SIDEWALKS AND APPURTENANT PARTS THEREOF AND THE RIGHT TO REASONABLE ACCESS TO GRANTOR'S PROPERTY FOR THE ABOVE DESCRIBED PURPOSES. THE EASEMENT SHALL RUN WITH THE REAL PROPERTY AND SHALL BE BINDING UPON THE GRANTOR AND THE GRANTOR'S SUCCESSORS, HEIRS, AND ASSIGNS.
3. ALL COMMON AREAS AND STREETS OR DRIVES TO SERVE AS PUBLIC UTILITY EASEMENTS.
4. ALL AREAS ARE COMMON AREAS AND FACILITIES EXCEPT AS OTHERWISE SPECIFICALLY DESIGNATED.
5. PLAT MUST BE RECORDED WITHIN 12 MONTHS OF FINAL PLAT APPROVAL, OR FOR PHASED DEVELOPMENTS, WITHIN 24 MONTHS OF RECORDATION OF MOST RECENT PHASE. THE FIRST FINAL PLAT APPROVAL WAS GRANTED ON THE ____ DAY OF ____, 20__.
6. THE INSTALLATION OF IMPROVEMENTS SHALL CONFORM TO ALL CITY STANDARDS, RESOLUTIONS AND ORDINANCES.
7. BUILDING PERMITS WILL NOT BE ISSUED UNTIL ALL IMPROVEMENTS HAVE BEEN INSTALLED AND ACCEPTED BY THE CITY IN WRITING OR BONDED FOR.
8. BUILDING PERMITS WILL NOT BE ISSUED UNTIL ALL IMPACT AND CONNECTION FEES ARE PAID IN FULL PER CITY REGULATIONS IN EFFECT AT THE TIME OF BUILDING PERMIT ISSUANCE.
9. NO CITY MAINTENANCE SHALL BE PROVIDED FOR STREETS DESIGNATED AS "PRIVATE" ON THIS PLAT.
10. DRIVEWAYS AND LOT ACCESS SHALL BE LIMITED TO INTERIOR LOCAL SUBDIVISION STREETS ONLY.
11. DRAINAGE SHALL NOT CROSS PROPERTY LINES. EXCESS OR CONCENTRATED DRAINAGE SHALL BE CONTAINED ON SITE OR DIRECTED TO AN APPROVED DRAINAGE FACILITY.
12. VINEYARD ACCEPTS NO RESPONSIBILITY FOR ANY PROPERTY DAMAGE CAUSED BY GROUND WATER FLOODING.
13. ALL BUILDINGS AND DEVELOPMENT SHALL BE IN CONFORMANCE WITH THE VINEYARD ZONING ORDINANCE.
14. VINEYARD TOWN CENTER MASTER ASSOCIATION, 13702 S. 200 W., DRAPER , UT. 84020

ROCKY MOUNTAIN POWER

1. PURSUANT TO UTAH CODE ANN. 54-3-27 THIS PLAT CONVEYS TO THE OWNER(S) OR OPERATORS OF UTILITY FACILITIES A PUBLIC UTILITY EASEMENT ALONG WITH ALL THE RIGHTS AND DUTIES DESCRIBED THEREIN.
2. PURSUANT TO UTAH CODE ANN. 17-27a-603(4)(c)(ii) ROCKY MOUNTAIN POWER ACCEPTS DELIVERY OF THE PUE AS DESCRIBED IN THIS PLAT AND APPROVES THIS PLAT SOLELY FOR THE PURPOSE OF CONFIRMING THAT THE PLAT CONTAINS PUBLIC UTILITY EASEMENTS AND APPROXIMATES THE LOCATION OF THE PUBLIC UTILITY EASEMENTS, BUT DOES NOT WARRANT THEIR PRECISE LOCATION. ROCKY MOUNTAIN POWER MAY REQUIRE OTHER EASEMENTS IN ORDER TO SERVE THIS DEVELOPMENT. THIS APPROVAL DOES NOT AFFECT ANY RIGHT THAT ROCKY MOUNTAIN POWER HAS UNDER:
   a. A RECORDED EASEMENT OR RIGHT-OF-WAY
   b. THE LAW APPLICABLE TO PRESCRIPTIVE RIGHTS
   c. TITLE 54, CHAPTER 8a, DAMAGE TO UNDERGROUND UTILITY FACILITIES OR
   d. ANY OTHER PROVISION OF LAW

DOMINION ENERGY CORPORATION

DOMINION ENERGY CORPORATION APPROVES THIS PLAT SOLELY FOR THE PURPOSE OF CONFIRMING THAT THE PLAT CONTAINS PUBLIC UTILITY EASEMENTS. DOMINION ENERGY CORPORATION MAY REQUIRE OTHER EASEMENTS IN ORDER TO SERVE THIS DEVELOPMENT. THIS APPROVAL DOES NOT CONSTITUTE ABROGATION OR WAIVER OF ANY OTHER EXISTING RIGHTS, OBLIGATIONS OR LIABILITIES PROVIDE BY LAW OR EQUITY. THIS APPROVAL DOES NOT CONSTITUTE ACCEPTANCE, APPROVAL OR ACKNOWLEDGEMENT OF ANY TERMS CONTAINED IN THE PLAT, INCLUDING THOSE SET FORTH IN THE OWNERS DEDICATION AND THE NOTES AND DOES NOT CONSTITUTE A GUARANTEE OF PARTICULAR TERMS OF NATURAL GAS SERVICE. FOR FURTHER INFORMATION PLEASE CONTACT DOMINION ENERGY CORPORATION'S RIGHT-OF-WAY DEPARTMENT AT 800-366-8532.

LEGEND

- BOUNDARY
- SECTION LINE
- EASEMENT
- RIGHT-OF-WAY LINE
- BUILDING SETBACK
- EXISTING PROPERTY LINE
- #5 REBAR AND CAP (FOCUS ENG.) TO BE SET
- SECTION MONUMENT (FOUND)
- LIMITS OF COMMON AREA & PUE
- LIMITS OF PRIVATE OWNERSHIP
- LIMITS OF LIMITED COMMON AREA & PUE

Curve Table

CURVE	RADIUS	DELTA	LENGTH	CHORD DIRECTION	CHORD LENGTH
C1	770.00	0°49'39"	11.12	S10°04'39"E	11.12
C2	770.00	4°18'35"	57.92	S12°38'46"E	57.90
C3	770.00	0°37'35"	8.42	S15°06'51"E	8.42
C4	215.00	1°39'31"	6.22	S14°35'53"E	6.22
C5	215.00	4°40'07"	17.52	S11°26'04"E	17.51

Line Table

LINE	DIRECTION	LENGTH
L1	N27°43'04"E	17.61

LAKEFRONT @ VINEYARD TOWN CENTER

PHASE 1E, PLAT U CONDOMINIUMS

(AMENDING PORTIONS OF LOT 4, GENEVA PARK WEST SUBDIVISION)

PORTIONS OF SECTION 7, T6S, R2E,
SALT LAKE BASE & MERIDIAN
VINEYARD CITY, UTAH COUNTY, UTAH

GRAPHIC SCALE

20 0 10 20 40 80

(IN FEET)
1 inch = 20 ft.

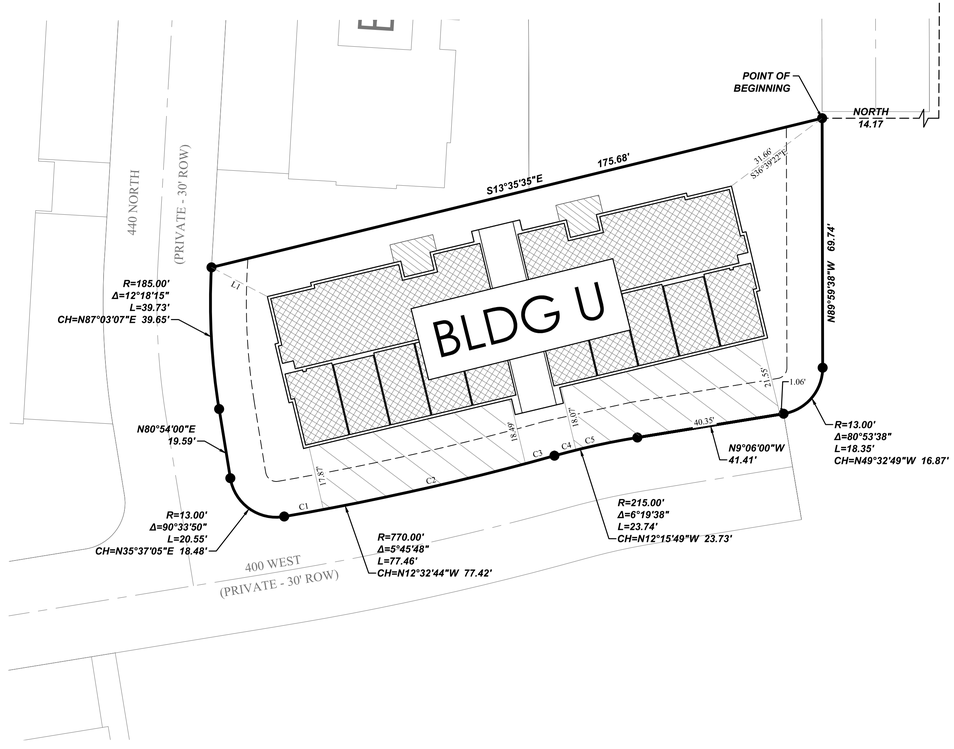

SURVEYOR'S CERTIFICATE

KNOWN ALL MEN BY THESE PRESENTS: I, SPENCER W. LLEWELYN, DO HEREBY CERTIFY THAT I AM A PROFESSIONAL LAND SURVEYOR, AND THAT I HOLD CERTIFICATE NO. #10516507 AS PRESCRIBED UNDER THE LAWS OF THE STATE OF UTAH. I FURTHER CERTIFY THAT AT THE REQUEST OF THE OWNER OF THE BELOW DESCRIBED LAND, I PERFORMED A SURVEY OF SAID LAND, THAT THE DESCRIPTION BELOW CORRECTLY DESCRIBES THE LAND SURFACE UPON WHICH WILL BE CONSTRUCTED , AND THIS RECORD OF SURVEY MAP, CONSISTING OF THREE (3) PAGES IS ACCURATE AND COMPLIES WITH THE PROVISIONS OF SECTION 57-8-13 (1) OF THE UTAH CONDOMINIUM OWNERSHIP ACT. I FURTHER CERTIFY THAT THE REFERENCE MARKERS SHOWN ON THIS PLAT ARE LOCATED AS SHOWN AND ARE SUFFICIENT TO READILY RETRACE OR RE-ESTABLISH THIS SURVEY.

Spencer W. Llewelyn
Professional Land Surveyor
Certificate No. 10516507

Date

BOUNDARY DESCRIPTION

A portion of Lot 4, GENEVA PARK WEST, according to the Official Plat thereof recorded March 14, 2013 as Entry No. 24721:2013 in the Office of the Utah County Recorder, located in the South Half of Section 7, Township 6 South, Range 2 East, Salt Lake Base & Meridian, in Vineyard, Utah, more particularly described as follows:

Beginning at a point located West 2,252.70 feet and North 14.17 feet from the Southeast Corner of Section 7, T6S, R2E, SLB&M (Basis of Bearing: S89°25'01"W along the Section line from the South 1/4 Corner of Section 8 to the Southeast Corner of Section 7, T6S, R2E, SLB&M); thence N89°59'38"W 69.74 feet; thence along the arc of a curve to the right with a radius of 13.00 feet a distance of 18.35 feet through a central angle of 80°53'38" Chord: N49°32'49"W 16.87 feet; thence N09°06'00"W 41.41 feet; thence along the arc of a curve to the left with a radius of 215.00 feet a distance of 23.74 feet through a central angle of 06°19'38" Chord: N12°15'49"W 23.73 feet; to a point of reverse curvature; thence along the arc of a curve to the right having a radius of 770.00 feet a distance of 77.46 feet through a central angle of 05°45'48" Chord: N12°32'44"W 77.42 feet to a point of compound curvature; thence along the arc of a curve to the right with a radius of 13.00 feet a distance of 20.55 feet through a central angle of 90°33'50" Chord: N35°37'05"E 18.48 feet; thence N80°54'00"E 19.59 feet; thence along the arc of a curve to the right with a radius of 185.00 feet a distance of 39.73 feet through a central angle of 12°18'15" Chord: N87°03'07"E 39.65 feet; thence S13°35'35"E 175.68 feet to the point of beginning.

Contains: 12,846 square feet or 0.29 acres+/-

OWNER'S DEDICATION

KNOW ALL MEN BY THESE PRESENT THAT WE, ALL OF THE UNDERSIGNED OWNERS OF ALL OF THE TRACT OF LAND DESCRIBED HEREWITH AS

LAKEFRONT @ VINEYARD TOWN CENTER
PHASE 1E, PLAT U
CONDOMINIUMS

A UTAH CONDOMINIUM PROJECT LOCATED ON SAID TRACT OF LAND, HAVING CAUSED A SURVEY TO BE MADE AND THIS RECORD OF SURVEY MAP TO BE PREPARED, DO HEREBY GIVE OUR CONSENT TO THE RECORDATION OF THIS RECORD OF SURVEY MAP AND SUBMIT THIS PROPERTY TO THE UTAH CONDOMINIUM OWNERSHIP ACT.
FURTHERMORE, WE DO HEREBY CONVEY TO ALL PUBLIC UTILITY AGENCIES, THEIR SUCCESSORS AND ASSIGNS, PERMANENT EASEMENTS AS SHOWN BY THE AREA MARKED "UTILITY EASEMENT" ON THE WITHIN PLAT FOR THE CONSTRUCTION AND MAINTENANCE OF ELECTRICAL, TELEPHONE, NATURAL GAS, SEWER AND WATER LINES AND APPURTENANCES, TOGETHER WITH THE RIGHT OF ACCESS THERETO

IN WITNESS WHEREOF, WE HAVE HEREUNTO SET OUR HANDS THIS _____ DAY OF _____ A.D. 20____

EDGE VINEYARD SHORES, LLC
STEVE MADDOX, MANAGER

LIMITED LIABILITY ACKNOWLEDGMENT

STATE OF UTAH
S.S.
COUNTY OF _____

ON THE ____ DAY OF _____ A.D. 20____ PERSONALLY APPEARED BEFORE ME , THE UNDERSIGNED NOTARY PUBLIC, IN AND FOR THE COUNTY OF _____, IN SAID STATE OF UTAH, _____, WHO AFTER BEING DULY SWORN, ACKNOWLEDGED TO ME THAT HE/SHE IS THE _____ OF _____ L.L.C., A UTAH L.L.C. AND THAT HE/SHE SIGNED THE OWNER'S DEDICATION FREELY AND VOLUNTARILY FOR AND IN BEHALF OF SAID LIMITED LIABILITY COMPANY FOR THE PURPOSES THEREIN MENTIONED.

MY COMMISSION EXPIRES:_____

A NOTARY PUBLIC COMMISSIONED IN UTAH RESIDING IN _____ COUNTY

MY COMMISSION No._____

PRINTED FULL NAME OF NOTARY

ACCEPTANCE BY LEGISLATIVE BODY

THE LEGISLATIVE BODY OF VINEYARD CITY OF UTAH COUNTY, APPROVES THIS SUBDIVISION AND HEREBY ACCEPTS THE DEDICATION OF ALL STREETS, EASEMENTS, AND OTHER PARCELS OF LAND INTENDED FOR PUBLIC PURPOSES FOR THE PERPETUAL USE OF THE PUBLIC THIS ____ DAY OF _____ 20___.

VINEYARD PLANNING COMMISSION CHAIR DATE: ___/___/_____	CITY ENGINEER DATE: ___/___/_____
CITY MANAGER DATE: ___/___/_____	CLERK/RECORDER DATE: ___/___/_____
CITY ATTORNEY DATE: ___/___/_____	

LAKEFRONT
@ VINEYARD TOWN CENTER
PHASE 1E, PLAT U
CONDOMINIUMS
(AMENDING PORTIONS OF LOT 4, GENEVA PARK WEST SUBDIVISION)
PORTIONS OF SECTION 7, T6S, R2E,
SALT LAKE BASE & MERIDIAN
VINEYARD CITY, UTAH COUNTY, UTAH

Line Table

LINE	DIRECTION	LENGTH
L1	N27°43'04"E	17.61

Curve Table

CURVE	RADIUS	DELTA	LENGTH	CHORD DIRECTION	CHORD LENGTH
C1	770.00	0°49'39"	11.12	S10°04'39"E	11.12
C2	770.00	4°18'35"	57.92	S12°38'46"E	57.90
C3	770.00	0°37'35"	8.42	S15°06'51"E	8.42
C4	215.00	1°39'31"	6.22	S14°35'53"E	6.22
C5	215.00	4°40'07"	17.52	S11°26'04"E	17.51

1 OF 2	07/09/20	SCALE: 1" = 20'

PREPARED FOR
EDGE HOMES
13702 SOUTH 200 WEST, SUITE B12
DRAPER, UTAH 84020
PH: 801-494-0150

FOCUS ©
ENGINEERING AND SURVEYING, LLC
6949 SOUTH HIGH TECH DRIVE SUITE 200
MIDVALE, UT 84047 PH: (801) 352-0075
www.focusutah.com

SURVEYOR'S SEAL	CLERK - RECORDER SEAL		

Z:_2020\20-0169 Lakefront at Vineyard Town Center South Redesign\design 20-0169\dwg\sheets\FINAL PLATS\PHASE 1E\C2.0 Final Plat Phase 1E BLDG U.dwg

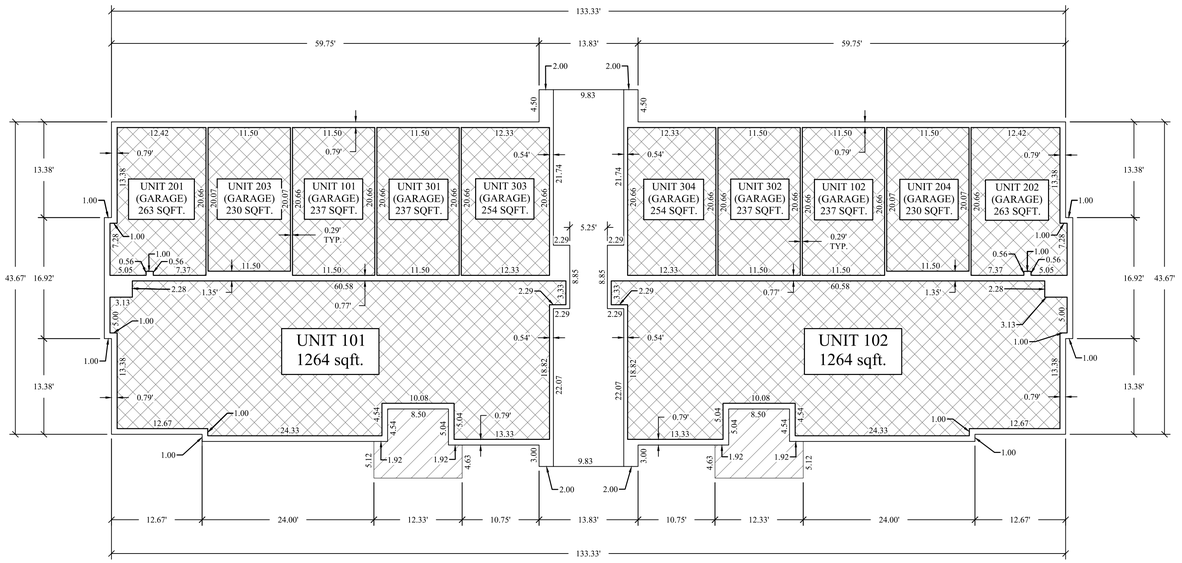

MAIN FLOOR

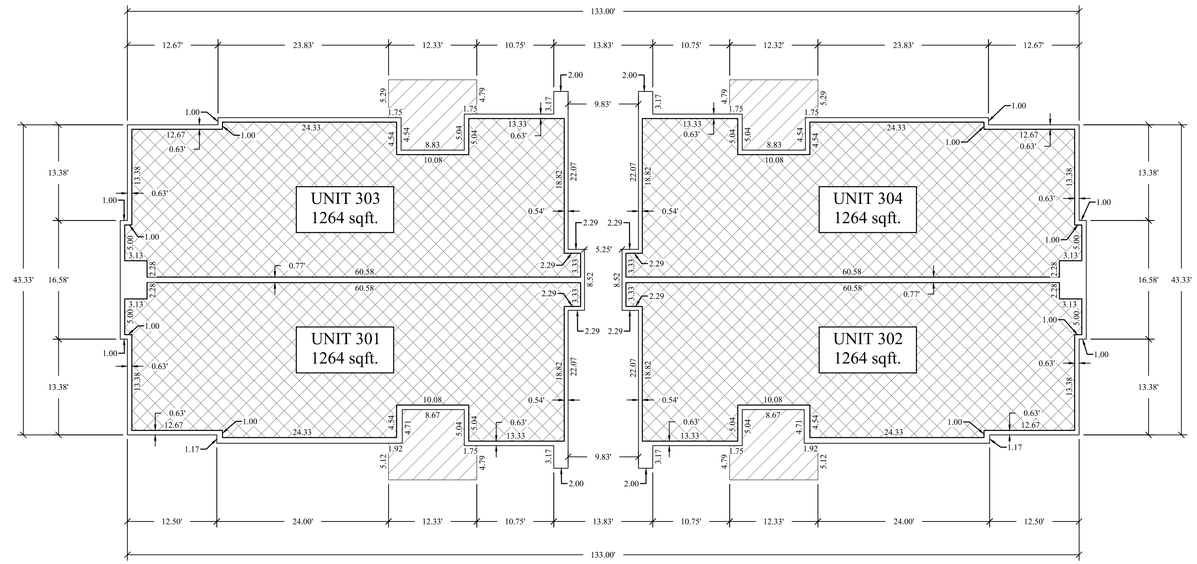

THIRD FLOOR

CONDOMINIUM DETAILS
BLDG. U

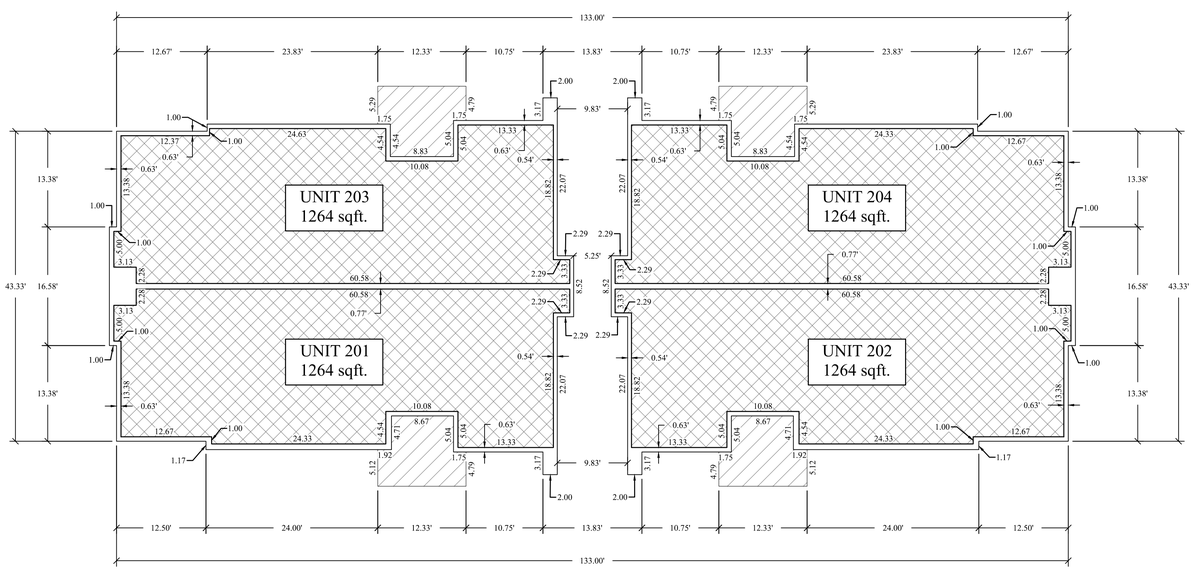

SECOND FLOOR

NOTES

1. ALL BUILDING WALLS ARE PARALLEL AND PERPENDICULAR TO REFERENCE BEARING SHOWN ON PLATS.

2. ALL AREAS ARE COMMON AREAS AND FACILITIES EXCEPT AS OTHERWISE SPECIFICALLY DESIGNATED.

ADDRESS TABLE

BUILDING NO.	UNIT NO.	ADDRESS
U	101	
U	102	
U	201	
U	202	
U	203	
U	204	
U	301	
U	302	
U	303	
U	304	

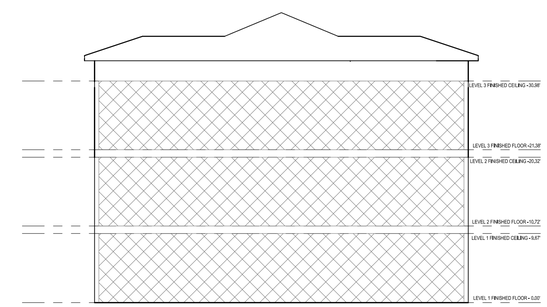

LIMITS OF COMMON AREA & PUE

LIMITS OF PRIVATE OWNERSHIP

LIMITS OF LIMITED COMMON AREA & PUE

GRAPHIC SCALE

10 0 5 10 20 40

(IN FEET)
1 inch = 10 ft.

LAKEFRONT @ VINEYARD TOWN CENTER

PHASE 1E, PLAT U CONDOMINIUMS

(AMENDING PORTIONS OF LOT 4, GENEVA PARK WEST SUBDIVISION)
PORTIONS OF SECTION 7, T6S, R2E,
SALT LAKE BASE & MERIDIAN
VINEYARD CITY, UTAH COUNTY, UTAH

2 OF 2	07/09/2020	SCALE: 1" = 10'

PREPARED FOR
EDGE HOMES
13702 SOUTH 200 WEST, SUITE B12
DRAPER, UTAH 84020
PH: 801-494-0150

FOCUS©
ENGINEERING AND SURVEYING, LLC
6949 SOUTH HIGH TECH DRIVE SUITE 200
MIDVALE, UT 84047 PH: (801) 352-0075
www.focusutah.com

SURVEYOR'S SEAL	CLERK - RECORDER SEAL		

Z:_2020\20-0169 Lakefront at Vineyard Town Center South Redesign\design 20-0169\dwg\sheets\FINAL PLATS\PHASE 1E\C2.1 Final Plat Phase 1E BLDG U.dwg

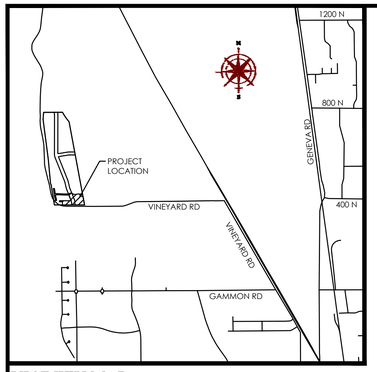

VICINITY MAP
N.T.S

LEGEND

- BOUNDARY
- SECTION LINE
- EASEMENT
- RIGHT-OF-WAY LINE
- BUILDING SETBACK
- EXISTING PROPERTY LINE
- #5 REBAR AND CAP (FOCUS ENG.) TO BE SET
- SECTION MONUMENT (FOUND)
- STREET MONUMENT (TO BE SET)
- BOUNDARY MARKERS
- LIMITS OF COMMON AREA & PUE
- LIMITS OF PRIVATE OWNERSHIP
- LIMITS OF LIMITED COMMON AREA & PUE
- FEMA ZONE X & AE

PHASE 1E
LAKEFRONT @ VINEYARD TOWN CENTER
SUBDIVISION
(AMENDING PORTIONS OF LOT 3 & LOT 4, GENEVA PARK WEST SUBDIVISION)
PORTIONS OF SECTION 7 & 18, T6S, R2E,
SALT LAKE BASE & MERIDIAN
VINEYARD CITY, UTAH COUNTY, UTAH

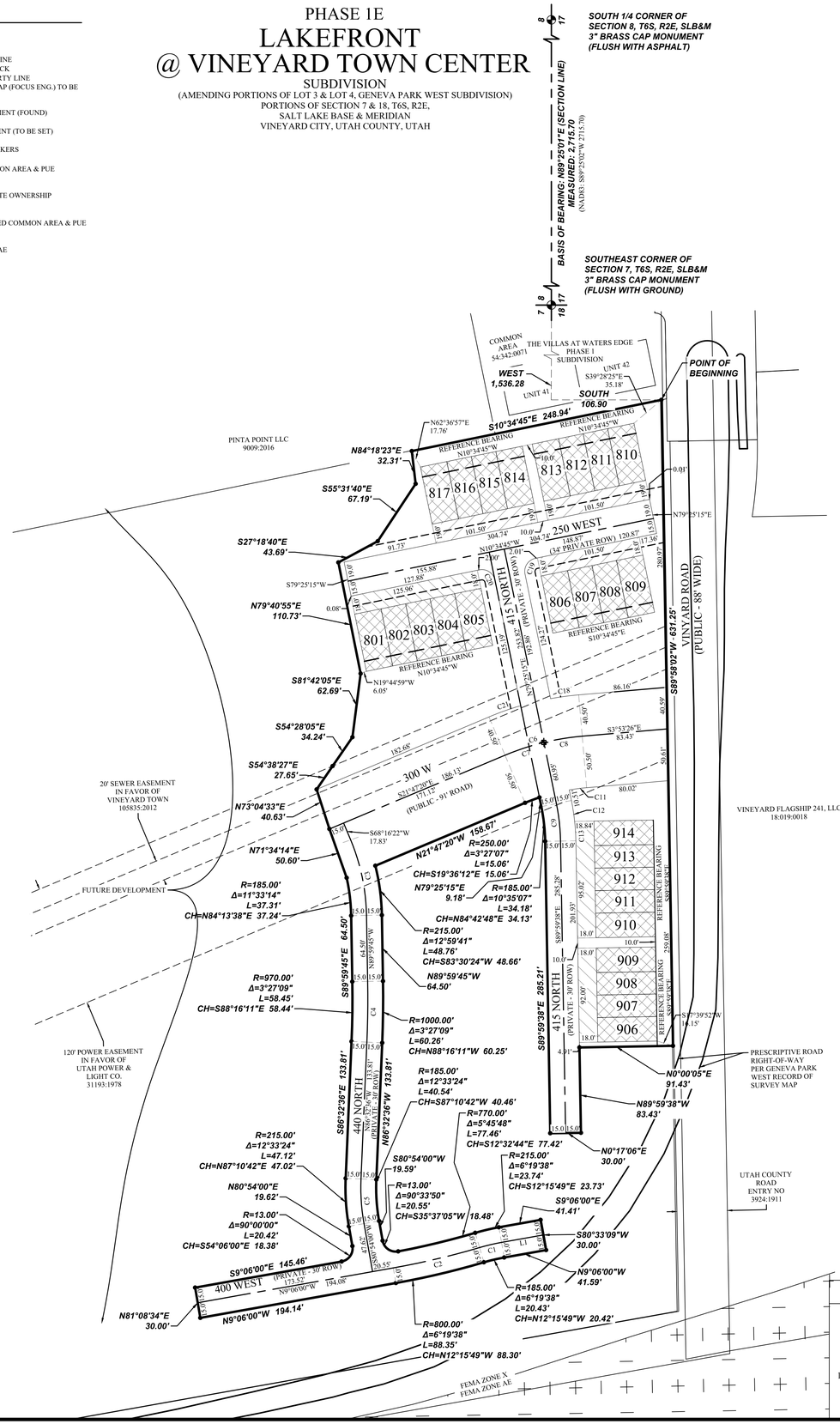

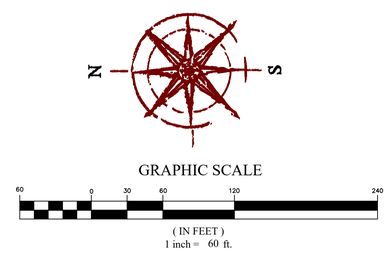

SURVEYOR'S CERTIFICATE

I, Spencer W. Llewelyn, do hereby certify that I am a Professional Land Surveyor, and that I hold Certificate No. 10516507 in accordance with Title 58, Chapter 22 of Utah State Code. I further certify by authority of the owner(s) that I have completed a Survey of the property described on this Plat in accordance with Section 17-23-17 of said Code, and have subdivided said tract of land into lots, blocks, streets, and easements, and the same has, or will be correctly surveyed, staked and monumented on the ground as shown on this Plat, and that this Plat is true and correct.

Spencer W. Llewelyn
Professional Land Surveyor
Certificate No. 10516507

Date

BOUNDARY DESCRIPTION

Portions of Lot 3 and Lot 4, GENEVA PARK WEST, according to the Official Plat thereof recorded March 14, 2013 as Entry No. 24721:2013 in the Office of the Utah County Recorder, located in the South Half of Section 7 and North Half of Section 18, Township 6 South, Range 2 East, Salt Lake Base & Meridian, in Vineyard, Utah, more particularly described as follows:

Beginning at the Southeast Corner of Lot 3, GENEVA PARK WEST, according to the Official Plat thereof recorded March 14, 2013 as Entry No. 24721:2013 in the Office of the Utah County Recorder located West 1,536.28 feet and South 106.90 feet from the Southeast Corner of Section 7, T6S, R2E, SLB&M (Basis of Bearing: S89°25'01"W along the Section line from the South 1/4 Corner of Section 8 to the Southeast Corner of Section 7, T6S, R2E, SLB&M); thence S89°58'02"W along the South line of said lot 631.25 feet; thence N00°00'05"E 91.43 feet; thence N89°59'38"W 83.43 feet; thence N00°17'06"E 30.00 feet; thence S89°59'38"E 285.21 feet; thence along the arc of a curve to the left with a radius of 185.00 feet a distance of 34.18 feet through a central angle of 10°35'07" Chord: N84°42'48"E 34.13 feet; thence N79°25'15"E 9.18 feet; thence Northerly along the arc of a non-tangent curve to the left having a radius of 250.00 feet (radius bears: S72°07'21"W) a distance of 15.06 feet through a central angle of 03°27'07" Chord: N19°36'12"W 15.06 feet; thence N21°47'20"W 158.67 feet; thence Westerly along the arc of a non-tangent curve to the right having a radius of 215.00 feet (radius bears: N12°59'26"W) a distance of 48.76 feet through a central angle of 12°59'41" Chord: S83°30'24"W 48.66 feet; thence N89°59'45"W 64.50 feet; thence along the arc of a curve to the right with a radius of 1,000.00 feet a distance of 60.26 feet through a central angle of 03°27'09" Chord: N88°16'11"W 60.25 feet; thence N86°32'36"W 133.81 feet; thence along the arc of a curve to the left with a radius of 185.00 feet a distance of 40.54 feet through a central angle of 12°33'24" Chord: S87°10'42"W 40.46 feet; thence S80°54'00"W 19.59 feet; thence along the arc of a curve to the left with a radius of 13.00 feet a distance of 20.55 feet through a central angle of 90°33'50" Chord: S35°37'05"W 18.48 feet to a point of compound curvature; thence along the arc of a curve to the left with a radius of 770.00 feet a distance of 77.46 feet through a central angle of 05°45'48" Chord: S12°32'44"E 77.42 feet to a point of reverse curvature; thence along the arc of a curve to the right having a radius of 215.00 feet a distance of 23.74 feet through a central angle of 06°19'38" Chord: S12°15'49"E 23.73 feet; thence S09°06'00"E 41.41 feet; thence S80°33'09"W 30.00 feet; thence N09°06'00"W 41.59 feet; thence along the arc of a curve to the left with a radius of 185.00 feet a distance of 20.43 feet through a central angle of 06°19'38" Chord: N12°15'49"W 20.42 feet to a point of reverse curvature; thence along the arc of a curve to the right having a radius of 800.00 feet a distance of 88.35 feet through a central angle of 06°19'38" Chord: N12°15'49"W 88.30 feet; thence N09°06'00"W 194.14 feet; thence N81°08'34"E 30.00 feet; thence S09°06'00"E 145.46 feet; thence along the arc of a curve to the right with a radius of 13.00 feet a distance of 20.42 feet through a central angle of 90°00'00" Chord: S54°06'00"E 18.38 feet; thence N80°54'00"E 19.62 feet; thence along the arc of a curve to the right with a radius of 215.00 feet a distance of 47.12 feet through a central angle of 12°33'24" Chord: N87°10'42"E 47.02 feet; thence S86°32'36"E 133.81 feet; thence along the arc of a curve to the left with a radius of 970.00 feet a distance of 58.45 feet through a central angle of 03°27'09" Chord: S88°16'11"E 58.44 feet; thence S89°59'45"E 64.50 feet; thence along the arc of a curve to the left with a radius of 185.00 feet a distance of 37.31 feet through a central angle of 11°33'14" Chord: N84°13'38"E 37.24 feet; thence N71°34'14"E 50.60 feet; thence N73°04'33"E 40.63 feet; thence S54°38'27"E 27.65 feet; thence S54°28'05"E 34.24 feet; thence S81°42'05"E 62.69 feet; thence N79°40'55"E 110.73 feet; thence S27°18'40"E 43.69 feet; thence S55°31'40"E 67.19 feet; thence N84°18'23"E 32.31 feet to the East line of said Lot 3; thence S10°34'45"E along said East line 248.93 feet to the point of beginning.

Contains: 3.87 acres+/-

OWNER'S DEDICATION

KNOW ALL MEN BY THESE PRESENT THAT WE, ALL OF THE UNDERSIGNED OWNERS OF ALL OF THE PROPERTY DESCRIBED IN THE SURVEYOR'S CERTIFICATE HEREON AND SHOWN ON THIS MAP, HAVE CAUSED THE SAME TO BE SUBDIVIDED INTO LOTS, BLOCKS, STREETS AND EASEMENTS AND DO HEREBY DEDICATE ANY PUBLIC STREETS AND OTHER PUBLIC AREAS AS INDICATED HEREON FOR PERPETUAL USE OF THE PUBLIC. PURSUANT TO UTAH CODE 10-9A-604(D) THE OWNER HEREBY CONVEYS THE COMMON AREA, AS INDICATED HEREON, TO THE LAKEFRONT TOWNHOMES ASSOCIATION, A UTAH NONPROFIT CORPORATION, WITH A REGISTERED ADDRESS OF 12227 BUSINESS PARK DR., SUITE 200 DRAPER, UT. 84020

IN WITNESS WHEREOF WE HAVE HEREUNTO SET OUR HANDS THIS _____ DAY OF_____ A.D. 20____

EDGE VINEYARD SHORES, LLC.

BY:STEVE MADDOX
ITS:MANAGER

ACCEPTANCE BY LEGISLATIVE BODY

THE LEGISLATIVE BODY OF VINEYARD CITY OF UTAH COUNTY, APPROVES THIS SUBDIVISION AND HEREBY ACCEPTS THE DEDICATION OF ALL STREETS, EASEMENTS, AND OTHER PARCELS OF LAND INTENDED FOR PUBLIC PURPOSES FOR THE PERPETUAL USE OF THE PUBLIC THIS ____ DAY OF _____ 20__.

VINEYARD PLANNING COMMISSION CHAIR DATE: ____/____/_____	CITY ENGINEER DATE: ____/____/_____
CITY MANAGER DATE: ____/____/_____	CLERK/RECORDER DATE: ____/____/_____
CITY ATTORNEY DATE: ____/____/_____	

NOTES

1. #5 X 24" REBAR & CAP (FOCUS ENG) TO BE SET AT ALL LOT CORNERS. NAILS OR PLUGS TO BE SET IN TOP BACK OF CURB AT EXTENSION OF SIDE LOT LINES, IN LIEU OF REBAR AND CAPS AT FRONT LOT CORNERS.

2. ALL PUBLIC UTILITY EASEMENTS PLATTED HEREON ARE IN PERPETUITY FOR INSTALLATION, MAINTENANCE, REPAIR AND REPLACEMENT OF PUBLIC UTILITIES, SIDEWALKS AND APPURTENANT PARTS THEREOF AND THE RIGHT TO REASONABLE ACCESS TO GRANTOR'S PROPERTY FOR THE ABOVE DESCRIBED PURPOSES. THE EASEMENT SHALL RUN WITH THE REAL PROPERTY AND SHALL BE BINDING UPON THE GRANTOR AND THE GRANTOR'S SUCCESSORS, HEIRS, AND ASSIGNS.

3. ALL COMMON AREAS AND STREETS OR DRIVES TO SERVE AS PUBLIC UTILITY EASEMENTS.

4. ALL AREAS ARE COMMON AREAS AND FACILITIES EXCEPT AS OTHERWISE SPECIFICALLY DESIGNATED.

5. PLAT MUST BE RECORDED WITHIN 12 MONTHS OF FINAL PLAT APPROVAL, OR FOR PHASED DEVELOPMENTS, WITHIN 24 MONTHS OF RECORDATION OF MOST RECENT PHASE. THE FIRST FINAL PLAT APPROVAL WAS GRANTED ON THE ____ DAY OF _____, 20__.

6. THE INSTALLATION OF IMPROVEMENTS SHALL CONFORM TO ALL CITY STANDARDS, RESOLUTIONS AND ORDINANCES.

7. BUILDING PERMITS WILL NOT BE ISSUED UNTIL ALL IMPROVEMENTS HAVE BEEN INSTALLED AND ACCEPTED BY THE CITY IN WRITING OR BONDED FOR.

8. BUILDING PERMITS WILL NOT BE ISSUED UNTIL ALL IMPACT AND CONNECTION FEES ARE PAID IN FULL PER CITY REGULATIONS IN EFFECT AT THE TIME OF BUILDING PERMIT ISSUANCE.

9. NO CITY MAINTENANCE SHALL BE PROVIDED FOR STREETS DESIGNATED AS "PRIVATE" ON THIS PLAT.

10. DRIVEWAYS AND LOT ACCESS SHALL BE LIMITED TO INTERIOR LOCAL SUBDIVISION STREETS ONLY.

11. DRAINAGE SHALL NOT CROSS PROPERTY LINES. EXCESS OR CONCENTRATED DRAINAGE SHALL BE CONTAINED ON SITE OR DIRECTED TO AN APPROVED DRAINAGE FACILITY.

12. VINEYARD ACCEPTS NO RESPONSIBILITY FOR ANY PROPERTY DAMAGE CAUSED BY GROUND WATER FLOODING.

13.ALL BUILDINGS AND DEVELOPMENT SHALL BE IN CONFORMANCE WITH THE VINEYARD ZONING ORDINANCE.

Curve Table

CURVE	RADIUS	DELTA	LENGTH	CHORD DIRECTION	CHORD LENGTH
C1	200.00	6°19'38"	22.09	N12°15'49"W	22.08
C2	785.00	6°19'38"	86.69	N12°15'49"W	86.64
C3	200.00	21°43'53"	75.86	S79°08'19"W	75.40
C4	985.00	3°27'09"	59.35	N88°16'11"W	59.34
C5	200.00	12°33'24"	43.83	S87°10'42"W	43.74
C6	250.00	17°52'44"	78.01	S12°49'48"E	77.70
C7	250.00	9°10'01"	40.00	S17°11'09"E	39.96
C8	250.00	8°42'43"	38.01	S08°14'47"E	37.98
C9	200.00	10°35'07"	36.95	N84°42'48"E	36.90
C11	199.45	4°55'00"	17.12	S06°20'48"E	17.11
C12	215.00	5°31'15"	20.72	S82°10'52"W	20.71
C13	215.00	5°03'52"	19.00	S87°28'26"W	19.00
C18	290.50	5°28'16"	27.74	N06°37'37"W	27.73
C19	13.00	90°00'00"	20.42	S55°34'45"E	18.38
C20	13.00	90°00'00"	20.42	S34°25'15"W	18.38
C21	250.00	7°32'27"	32.90	N18°31'38"W	32.88

Line Table

LINE	DIRECTION	LENGTH
L1	N09°06'00"W	41.50

LIMITED LIABILITY ACKNOWLEDGMENT

STATE OF UTAH
S.S.
COUNTY OF _____

ON THE ____ DAY OF _____ A.D. 20___ PERSONALLY APPEARED BEFORE ME , THE UNDERSIGNED NOTARY PUBLIC, IN AND FOR THE COUNTY OF _____, IN SAID STATE OF UTAH, _____, WHO AFTER BEING DULY SWORN, ACKNOWLEDGED TO ME THAT HE/SHE IS THE _____ OF _____ L.L.C., A UTAH L.L.C. AND THAT HE/SHE SIGNED THE OWNER'S DEDICATION FREELY AND VOLUNTARILY FOR AND IN BEHALF OF SAID LIMITED LIABILITY COMPANY FOR THE PURPOSES THEREIN MENTIONED.

MY COMMISSION EXPIRES:_____

A NOTARY PUBLIC COMMISSIONED IN UTAH RESIDING IN _____ COUNTY

MY COMMISSION No._____

PRINTED FULL NAME OF NOTARY

ROCKY MOUNTAIN POWER

1. PURSUANT TO UTAH CODE ANN. 54-3-27 THIS PLAT CONVEYS TO THE OWNER(S) OR OPERATORS OF UTILITY FACILITIES A PUBLIC UTILITY EASEMENT ALONG WITH ALL THE RIGHTS AND DUTIES DESCRIBED THEREIN.
2. PURSUANT TO UTAH CODE ANN. 17-27a-603(4)(c)(ii) ROCKY MOUNTAIN POWER ACCEPTS DELIVERY OF THE PUE AS DESCRIBED IN THIS PLAT AND APPROVES THIS PLAT SOLELY FOR THE PURPOSE OF CONFIRMING THAT THE PLAT CONTAINS PUBLIC UTILITY EASEMENTS AND APPROXIMATES THE LOCATION OF THE PUBLIC UTILITY EASEMENTS, BUT DOES NOT WARRANT THEIR PRECISE LOCATION. ROCKY MOUNTAIN POWER MAY REQUIRE OTHER EASEMENTS IN ORDER TO SERVE THIS DEVELOPMENT. THIS APPROVAL DOES NOT AFFECT ANY RIGHT THAT ROCKY MOUNTAIN POWER HAS UNDER:
   a. A RECORDED EASEMENT OR RIGHT-OF-WAY
   b. THE LAW APPLICABLE TO PRESCRIPTIVE RIGHTS
   c. TITLE 54, CHAPTER 8a, DAMAGE TO UNDERGROUND UTILITY FACILITIES OR
   d. ANY OTHER PROVISION OF LAW

DOMINION ENERGY CORPORATION

DOMINION ENERGY CORPORATION APPROVES THIS PLAT SOLELY FOR THE PURPOSE OF CONFIRMING THAT THE PLAT CONTAINS PUBLIC UTILITY EASEMENTS. DOMINION ENERGY CORPORATION MAY REQUIRE OTHER EASEMENTS IN ORDER TO SERVE THIS DEVELOPMENT. THIS APPROVAL DOES NOT CONSTITUTE ABROGATION OR WAIVER OF ANY OTHER EXISTING RIGHTS, OBLIGATIONS OR LIABILITIES PROVIDE BY LAW OR EQUITY. THIS APPROVAL DOES NOT CONSTITUTE ACCEPTANCE, APPROVAL OR ACKNOWLEDGEMENT OF ANY TERMS CONTAINED IN THE PLAT, INCLUDING THOSE SET FORTH IN THE OWNERS DEDICATION AND THE NOTES AND DOES NOT CONSTITUTE A GUARANTEE OF PARTICULAR TERMS OF NATURAL GAS SERVICE. FOR FURTHER INFORMATION PLEASE CONTACT DOMINION ENERGY CORPORATION'S RIGHT-OF-WAY DEPARTMENT AT 800-366-8532.

PHASE 1E
LAKEFRONT @ VINEYARD TOWN CENTER
SUBDIVISION
(AMENDING PORTIONS OF LOT 3 & LOT 4, GENEVA PARK WEST SUBDIVISION)
PORTIONS OF SECTION 7 & 18, T6S, R2E,
SALT LAKE BASE & MERIDIAN
VINEYARD CITY, UTAH COUNTY, UTAH

1 OF 2	7/9/2020	SCALE: 1" = 60'

PREPARED FOR
EDGE HOMES
13702 SOUTH 200 WEST, SUITE B12
DRAPER, UTAH 84020
PH: 801-494-0150

FOCUS©
ENGINEERING AND SURVEYING, LLC
6949 SOUTH HIGH TECH DRIVE SUITE 200
MIDVALE, UT 84047 PH: (801) 352-0075
www.focusutah.com

SURVEYOR'S SEAL	CLERK RECORDER SEAL	COUNTY RECORDER

Z:_2020\20-0169 Lakefront at Vineyard Town Center South Redesign\design 20-0169\dwg\sheets\FINAL PLATS\PHASE 1E\C2.0 Final Plat Phase 1E.dwg

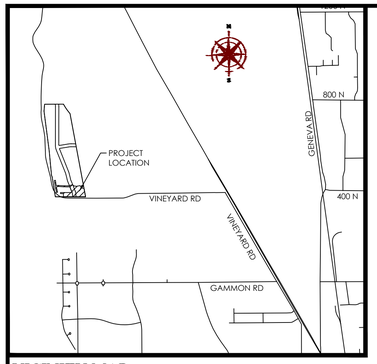

VICINITY MAP
N.T.S

LEGEND

- BOUNDARY
- SECTION LINE
- EASEMENT
- RIGHT-OF-WAY LINE
- BUILDING SETBACK
- EXISTING PROPERTY LINE
- LIMITS OF PRIVATE OWNERSHIP

PHASE 1-E

LAKEFRONT @ VINEYARD TOWN CENTER

SUBDIVISION
(AMENDING PORTIONS OF LOT 3 AND LOT 4, GENEVA PARK WEST SUBDIVISION)
LOCATED IN THE SE1/4 OF SECTION 7, T6S, R2E,
SALT LAKE BASE & MERIDIAN
VINEYARD CITY, UTAH COUNTY, UTAH

GRAPHIC SCALE

20 0 10 20 40 80

(IN FEET)
1 inch = 20 ft.

NOTES

1. #5 X 24" REBAR & CAP (FOCUS ENG) TO BE SET AT ALL LOT CORNERS. NAILS OR PLUGS TO BE SET IN TOP BACK OF CURB AT EXTENSION OF SIDE LOT LINES, IN LIEU OF REBAR AND CAPS AT FRONT LOT CORNERS.
2. ALL PUBLIC UTILITY EASEMENTS PLATTED HEREON ARE IN PERPETUITY FOR INSTALLATION, MAINTENANCE, REPAIR AND REPLACEMENT OF PUBLIC UTILITIES, SIDEWALKS AND APPURTENANT PARTS THEREOF AND THE RIGHT TO REASONABLE ACCESS TO GRANTOR'S PROPERTY FOR THE ABOVE DESCRIBED PURPOSES. THE EASEMENT SHALL RUN WITH THE REAL PROPERTY AND SHALL BE BINDING UPON THE GRANTOR AND THE GRANTOR'S SUCCESSORS, HEIRS, AND ASSIGNS.
3. ALL COMMON AREAS AND STREETS OR DRIVES TO SERVE AS PUBLIC UTILITY EASEMENTS.
4. ALL BUILDING WALLS ARE PARALLEL AND PERPENDICULAR TO REFERENCE BEARING SHOWN ON BUILDING.
5. ALL AREAS ARE COMMON AREAS AND FACILITIES EXCEPT AS OTHERWISE SPECIFICALLY DESIGNATED.

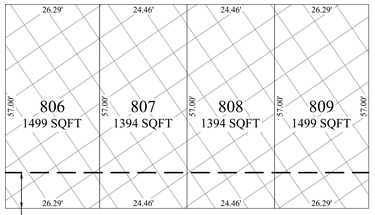

FOURPLEX TOWNHOMES

10' REAR BLDG. SETBACK (TYP.)

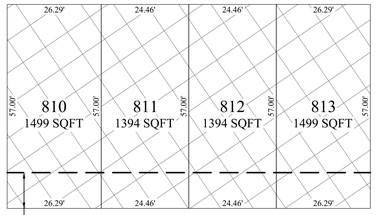

FOURPLEX TOWNHOMES

10' REAR BLDG. SETBACK (TYP.)

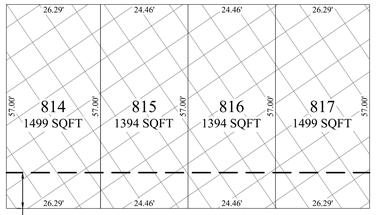

FOURPLEX TOWNHOMES

10' REAR BLDG. SETBACK (TYP.)

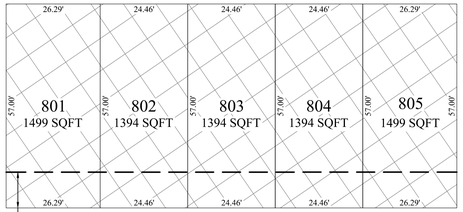

FIVEPLEX TOWNHOMES

10' REAR BLDG. SETBACK (TYP.)

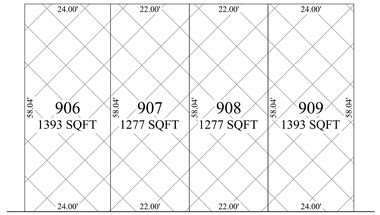

FOURPLEX TOWNHOMES

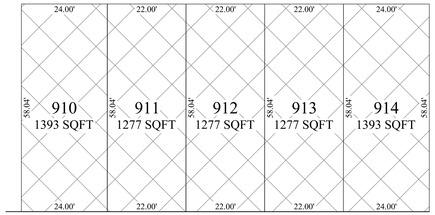

FIVEPLEX TOWNHOMES

PHASE 1-E
LAKEFRONT @ VINEYARD TOWN CENTER
SUBDIVISION
(AMENDING PORTIONS OF LOT 3 AND LOT 4, GENEVA PARK WEST SUBDIVISION)
LOCATED IN THE SE1/4 OF SECTION 7, T6S, R2E,
SALT LAKE BASE & MERIDIAN
VINEYARD CITY, UTAH COUNTY, UTAH

2 OF 2	7/9/2020	SCALE: 1" = 20'	SURVEYOR'S SEAL	CLERK PUBLIC SEAL

PREPARED FOR
EDGE HOMES
13702 SOUTH 200 WEST, SUITE B12
DRAPER, UTAH 84020
PH: 801-494-0150

FOCUS©
ENGINEERING AND SURVEYING, LLC
6949 SOUTH HIGH TECH DRIVE SUITE 200
MIDVALE, UT 84047 PH: (801) 352-0075
www.focusutah.com

Z:_2020\20-0169 Lakefront at Vineyard Town Center South Redesign\design 20-0169\dwg\sheets\FINAL PLATS\PHASE 1E\C2.1 Final Plat Phase 1E.dwg

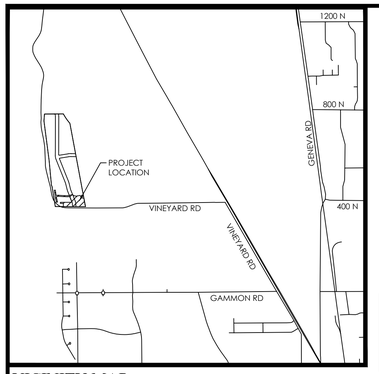

VICINITY MAP

N.T.S

LEGEND

- BOUNDARY
- SECTION LINE
- EASEMENT
- RIGHT-OF-WAY LINE
- BUILDING SETBACK
- EXISTING PROPERTY LINE
- SECTION MONUMENT (FOUND)
- STREET MONUMENT (TO BE SET)
- BOUNDARY MARKERS
- LIMITS OF COMMON AREA & PUE
- LIMITS OF PRIVATE OWNERSHIP
- LIMITS OF LIMITED COMMON AREA & PUE

Curve Table

CURVE	RADIUS	DELTA	LENGTH	CHORD DIRECTION	CHORD LENGTH
C1	404.50	0°08'50"	1.04	S13°56'06"E	1.04
C2	404.50	7°46'49"	54.93	N17°53'56"W	54.88

Line Table

LINE	DIRECTION	LENGTH
L1	S02°43'24"W	18.19

LAKEFRONT
@ VINEYARD TOWN CENTER
PHASE 1F, PLAT L
CONDOMINIUMS
(AMENDING PORTIONS OF LOT 4, GENEVA PARK WEST SUBDIVISION)
PORTIONS OF SECTION 7, T6S, R2E,
SALT LAKE BASE & MERIDIAN
VINEYARD CITY, UTAH COUNTY, UTAH

GRAPHIC SCALE

20 0 10 20 40 80

(IN FEET)
1 inch = 20 ft.

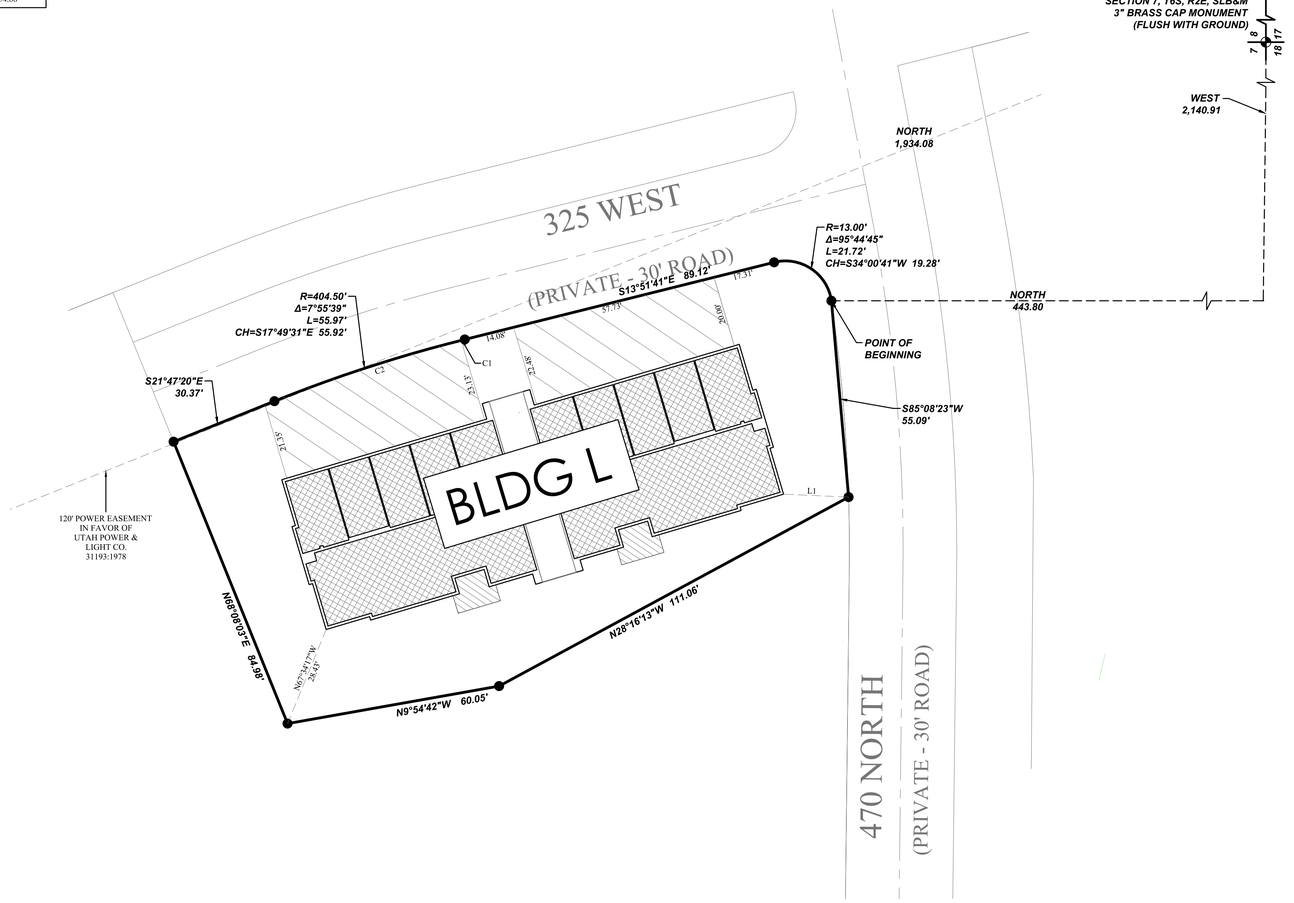

SURVEYOR'S CERTIFICATE

KNOWN ALL MEN BY THESE PRESENTS: I, SPENCER W. LLEWELYN, DO HEREBY CERTIFY THAT I AM A PROFESSIONAL LAND SURVEYOR, AND THAT I HOLD CERTIFICATE NO. #10516507 AS PRESCRIBED UNDER THE LAWS OF THE STATE OF UTAH. I FURTHER CERTIFY THAT AT THE REQUEST OF THE OWNER OF THE BELOW DESCRIBED LAND, I PERFORMED A SURVEY OF SAID LAND, THAT THE DESCRIPTION BELOW CORRECTLY DESCRIBES THE LAND SURFACE UPON WHICH WILL BE CONSTRUCTED , AND THIS RECORD OF SURVEY MAP, CONSISTING OF THREE (3) PAGES IS ACCURATE AND COMPLIES WITH THE PROVISIONS OF SECTION 57-8-13 (1) OF THE UTAH CONDOMINIUM OWNERSHIP ACT. I FURTHER CERTIFY THAT THE REFERENCE MARKERS SHOWN ON THIS PLAT ARE LOCATED AS SHOWN AND ARE SUFFICIENT TO READILY RETRACE OR RE-ESTABLISH THIS SURVEY.

Spencer W. Llewelyn
Professional Land Surveyor
Certificate No. 10516507

Date

BOUNDARY DESCRIPTION

A portion of Lot 4, GENEVA PARK WEST, according to the Official Plat thereof recorded March 14, 2013 as Entry No. 24721:2013 in the Office of the Utah County Recorder, located in the South Half of Section 7, Township 6 South, Range 2 East, Salt Lake Base & Meridian, in Vineyard, Utah, more particularly described as follows:

Beginning at a point located West 2,140.91 feet and North 443.80 feet from the Southeast Corner of Section 7, T6S, R2E, SLB&M (Basis of Bearing: S89°25'01"W along the Section line from the South 1/4 Corner of Section 8 to the Southeast Corner of Section 7, T6S, R2E, SLB&M); thence S85°08'23"W 55.09 feet; thence N28°16'13"W 111.06 feet; thence N09°54'42"W 60.05 feet; thence N68°08'03"E 84.98 feet; thence S21°47'20"E 30.37 feet; thence along the arc of a curve to the right with a radius of 404.50 feet a distance of 55.97 feet through a central angle of 07°55'39" Chord: S17°49'31"E 55.92 feet; thence S13°51'41"E 89.12 feet; thence along the arc of a curve to the right with a radius of 13.00 feet a distance of 21.72 feet through a central angle of 95°44'45" Chord: S34°00'41"W 19.28 feet to the point of beginning.

Contains: 15,190 square feet or 0.35 acres+/-

OWNER'S DEDICATION

KNOW ALL MEN BY THESE PRESENT THAT WE, ALL OF THE UNDERSIGNED OWNERS OF ALL OF THE TRACT OF LAND DESCRIBED HEREWITH AS

LAKEFRONT @ VINEYARD TOWN CENTER
PHASE 1F, PLAT L
CONDOMINIUMS

A UTAH CONDOMINIUM PROJECT LOCATED ON SAID TRACT OF LAND, HAVING CAUSED A SURVEY TO BE MADE AND THIS RECORD OF SURVEY MAP TO BE PREPARED. DO HEREBY GIVE OUR CONSENT TO THE RECORDATION OF THIS RECORD OF SURVEY MAP AND SUBMIT THIS PROPERTY TO THE UTAH CONDOMINIUM OWNERSHIP ACT.
FURTHERMORE, WE DO HEREBY CONVEY TO ALL PUBLIC UTILITY AGENCIES, THEIR SUCCESSORS AND ASSIGNS, PERMANENT EASEMENTS AS SHOWN BY THE AREA MARKED "UTILITY EASEMENT" ON THE WITHIN PLAT FOR THE CONSTRUCTION AND MAINTENANCE OF ELECTRICAL, TELEPHONE, NATURAL GAS, SEWER AND WATER LINES AND APPURTENANCES, TOGETHER WITH THE RIGHT OF ACCESS THERETO

IN WITNESS WHEREOF, WE HAVE HEREUNTO SET OUR HANDS THIS _____ DAY OF _____ A.D. 20____

EDGE VINEYARD SHORES, LLC
STEVE MADDOX, MANAGER

LIMITED LIABILITY ACKNOWLEDGMENT

STATE OF UTAH
S.S.
COUNTY OF _____

ON THE ____ DAY OF _____ A.D. 20____ PERSONALLY APPEARED BEFORE ME , THE UNDERSIGNED NOTARY PUBLIC, IN AND FOR THE COUNTY OF _____, IN SAID STATE OF UTAH, _____, WHO AFTER BEING DULY SWORN, ACKNOWLEDGED TO ME THAT HE/SHE IS THE _____ OF _____ L.L.C., A UTAH L.L.C. AND THAT HE/SHE SIGNED THE OWNER'S DEDICATION FREELY AND VOLUNTARILY FOR AND IN BEHALF OF SAID LIMITED LIABILITY COMPANY FOR THE PURPOSES THEREIN MENTIONED.

MY COMMISSION EXPIRES:_____

A NOTARY PUBLIC COMMISSIONED IN UTAH RESIDING IN _____ COUNTY

MY COMMISSION No._____

PRINTED FULL NAME OF NOTARY

ACCEPTANCE BY LEGISLATIVE BODY

THE LEGISLATIVE BODY OF VINEYARD CITY OF UTAH COUNTY, APPROVES THIS SUBDIVISION AND HEREBY ACCEPTS THE DEDICATION OF ALL STREETS, EASEMENTS, AND OTHER PARCELS OF LAND INTENDED FOR PUBLIC PURPOSES FOR THE PERPETUAL USE OF THE PUBLIC THIS ____ DAY OF _____ 20___.

VINEYARD PLANNING COMMISSION CHAIR DATE: ____/____/_____	CITY ENGINEER DATE: ____/____/_____
CITY MANAGER DATE: ____/____/_____	CLERK/RECORDER DATE: ____/____/_____
CITY ATTORNEY DATE: ____/____/_____	

LAKEFRONT
@ VINEYARD TOWN CENTER
PHASE 1F, PLAT L
CONDOMINIUMS
(AMENDING PORTIONS OF LOT 4, GENEVA PARK WEST SUBDIVISION)
PORTIONS OF SECTION 7, T6S, R2E,
SALT LAKE BASE & MERIDIAN
VINEYARD CITY, UTAH COUNTY, UTAH

NOTES

1. #5 X 24" REBAR & CAP (FOCUS ENG) TO BE SET AT ALL LOT CORNERS. NAILS OR PLUGS TO BE SET IN TOP BACK OF CURB AT EXTENSION OF SIDE LOT LINES, IN LIEU OF REBAR AND CAPS AT FRONT LOT CORNERS.
2. ALL PUBLIC UTILITY EASEMENTS PLATTED HEREON ARE IN PERPETUITY FOR INSTALLATION, MAINTENANCE, REPAIR AND REPLACEMENT OF PUBLIC UTILITIES, SIDEWALKS AND APPURTENANT PARTS THEREOF AND THE RIGHT TO REASONABLE ACCESS TO GRANTOR'S PROPERTY FOR THE ABOVE DESCRIBED PURPOSES. THE EASEMENT SHALL RUN WITH THE REAL PROPERTY AND SHALL BE BINDING UPON THE GRANTOR AND THE GRANTOR'S SUCCESSORS, HEIRS, AND ASSIGNS.
3. ALL COMMON AREAS AND STREETS OR DRIVES TO SERVE AS PUBLIC UTILITY EASEMENTS.
4. ALL AREAS ARE COMMON AREAS AND FACILITIES EXCEPT AS OTHERWISE SPECIFICALLY DESIGNATED.
5. PLAT MUST BE RECORDED WITHIN 12 MONTHS OF FINAL PLAT APPROVAL, OR FOR PHASED DEVELOPMENTS, WITHIN 24 MONTHS OF RECORDATION OF MOST RECENT PHASE. THE FIRST FINAL PLAT APPROVAL WAS GRANTED ON THE ____ DAY OF ____, 20 _.
6. THE INSTALLATION OF IMPROVEMENTS SHALL CONFORM TO ALL CITY STANDARDS, RESOLUTIONS AND ORDINANCES.
7. BUILDING PERMITS WILL NOT BE ISSUED UNTIL ALL IMPROVEMENTS HAVE BEEN INSTALLED AND ACCEPTED BY THE CITY IN WRITING OR BONDED FOR.
8. BUILDING PERMITS WILL NOT BE ISSUED UNTIL ALL IMPACT AND CONNECTION FEES ARE PAID IN FULL PER CITY REGULATIONS IN EFFECT AT THE TIME OF BUILDING PERMIT ISSUANCE.
9. NO CITY MAINTENANCE SHALL BE PROVIDED FOR STREETS DESIGNATED AS "PRIVATE" ON THIS PLAT.
10. DRIVEWAYS AND LOT ACCESS SHALL BE LIMITED TO INTERIOR LOCAL SUBDIVISION STREETS ONLY.
11. DRAINAGE SHALL NOT CROSS PROPERTY LINES. EXCESS OR CONCENTRATED DRAINAGE SHALL BE CONTAINED ON SITE OR DIRECTED TO AN APPROVED DRAINAGE FACILITY.
12. VINEYARD ACCEPTS NO RESPONSIBILITY FOR ANY PROPERTY DAMAGE CAUSED BY GROUND WATER FLOODING.
13. ALL BUILDINGS AND DEVELOPMENT SHALL BE IN CONFORMANCE WITH THE VINEYARD ZONING ORDINANCE.
14. VINEYARD TOWN CENTER MASTER ASSOCIATION, 13702 S. 200 W., DRAPER , UT. 84020

ROCKY MOUNTAIN POWER

1. PURSUANT TO UTAH CODE ANN. 54-3-27 THIS PLAT CONVEYS TO THE OWNER(S) OR OPERATORS OF UTILITY FACILITIES A PUBLIC UTILITY EASEMENT ALONG WITH ALL THE RIGHTS AND DUTIES DESCRIBED THEREIN.
2. PURSUANT TO UTAH CODE ANN. 17-27a-603(4)(c)(ii) ROCKY MOUNTAIN POWER ACCEPTS DELIVERY OF THE PUE AS DESCRIBED IN THIS PLAT AND APPROVES THIS PLAT SOLELY FOR THE PURPOSE OF CONFIRMING THAT THE PLAT CONTAINS PUBLIC UTILITY EASEMENTS AND APPROXIMATES THE LOCATION OF THE PUBLIC UTILITY EASEMENTS, BUT DOES NOT WARRANT THEIR PRECISE LOCATION. ROCKY MOUNTAIN POWER MAY REQUIRE OTHER EASEMENTS IN ORDER TO SERVE THIS DEVELOPMENT. THIS APPROVAL DOES NOT AFFECT ANY RIGHT THAT ROCKY MOUNTAIN POWER HAS UNDER:
   a. A RECORDED EASEMENT OR RIGHT-OF-WAY
   b. THE LAW APPLICABLE TO PRESCRIPTIVE RIGHTS
   c. TITLE 54, CHAPTER 8a, DAMAGE TO UNDERGROUND UTILITY FACILITIES OR
   d. ANY OTHER PROVISION OF LAW

DOMINION ENERGY CORPORATION

DOMINION ENERGY CORPORATION APPROVES THIS PLAT SOLELY FOR THE PURPOSE OF CONFIRMING THAT THE PLAT CONTAINS PUBLIC UTILITY EASEMENTS. DOMINION ENERGY CORPORATION MAY REQUIRE OTHER EASEMENTS IN ORDER TO SERVE THIS DEVELOPMENT. THIS APPROVAL DOES NOT CONSTITUTE ABROGATION OR WAIVER OF ANY OTHER EXISTING RIGHTS, OBLIGATIONS OR LIABILITIES PROVIDE BY LAW OR EQUITY. THIS APPROVAL DOES NOT CONSTITUTE ACCEPTANCE, APPROVAL OR ACKNOWLEDGEMENT OF ANY TERMS CONTAINED IN THE PLAT, INCLUDING THOSE SET FORTH IN THE OWNERS DEDICATION AND THE NOTES AND DOES NOT CONSTITUTE A GUARANTEE OF PARTICULAR TERMS OF NATURAL GAS SERVICE. FOR FURTHER INFORMATION PLEASE CONTACT DOMINION ENERGY CORPORATION'S
RIGHT-OF-WAY DEPARTMENT AT 800-366-8532.

1 OF 2	07/09/20	SCALE: 1" = 20'

PREPARED FOR
EDGE HOMES
13702 SOUTH 200 WEST, SUITE B12
DRAPER, UTAH 84020
PH: 801-494-0150

FOCUS©
ENGINEERING AND SURVEYING, LLC
6949 SOUTH HIGH TECH DRIVE SUITE 200
MIDVALE, UT 84047 PH: (801) 352-0075
www.focusutah.com

SURVEYOR'S SEAL	CLERK - RECORDER SEAL		

Z:_2020\20-0169 Lakefront at Vineyard Town Center South Redesign\design 20-0169\dwg\sheets\FINAL PLATS\PHASE 1F\C2.0 Final Plat Phase 1F BLDG L.dwg

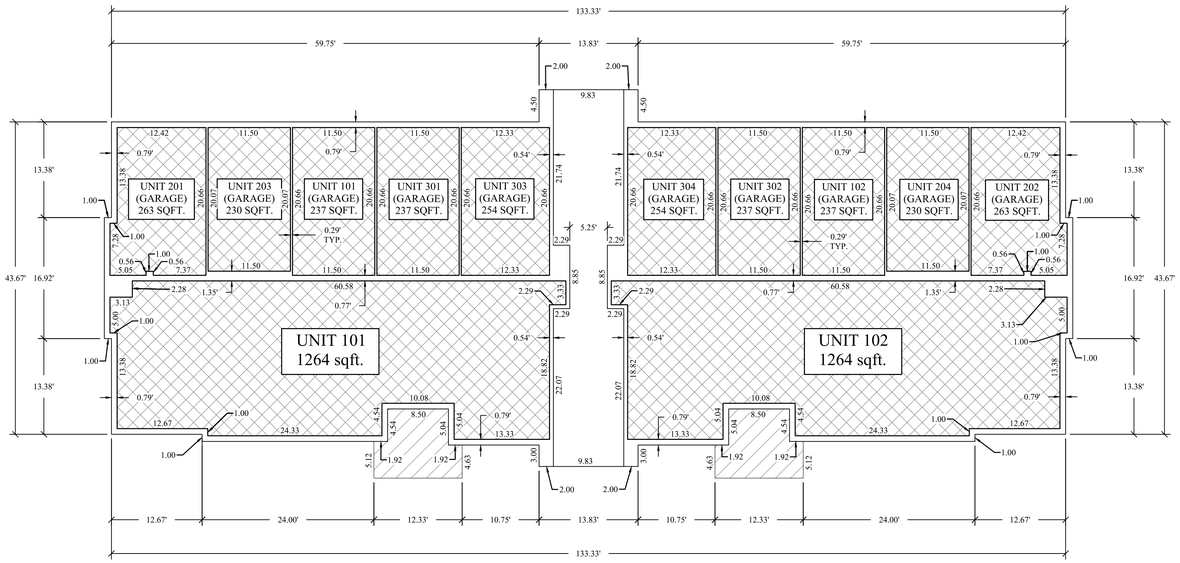

MAIN FLOOR

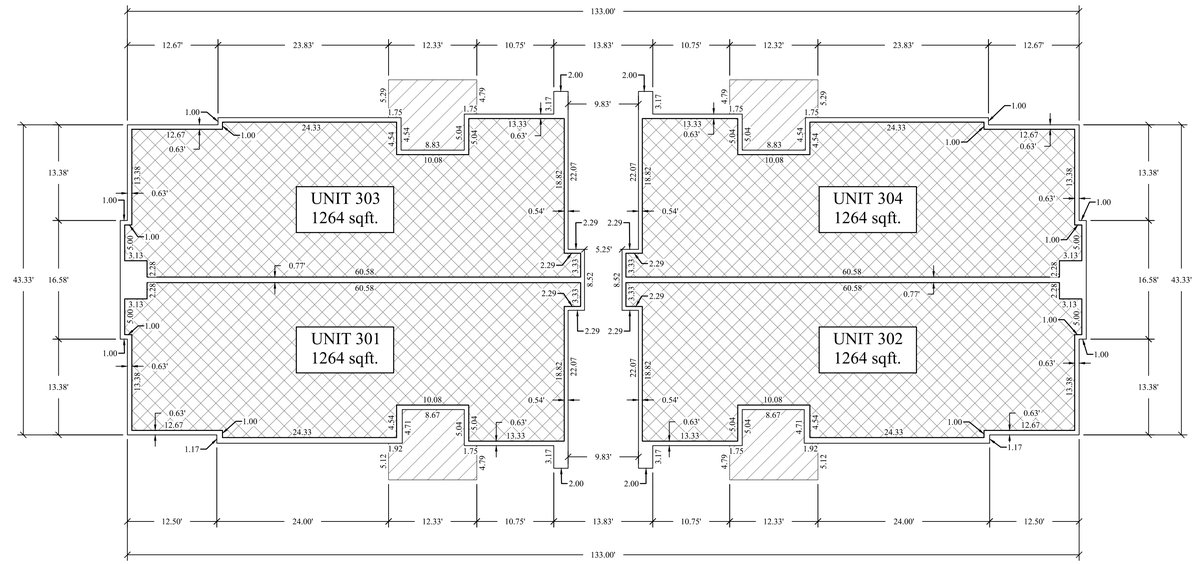

THIRD FLOOR

CONDOMINIUM DETAILS
BLDG. L

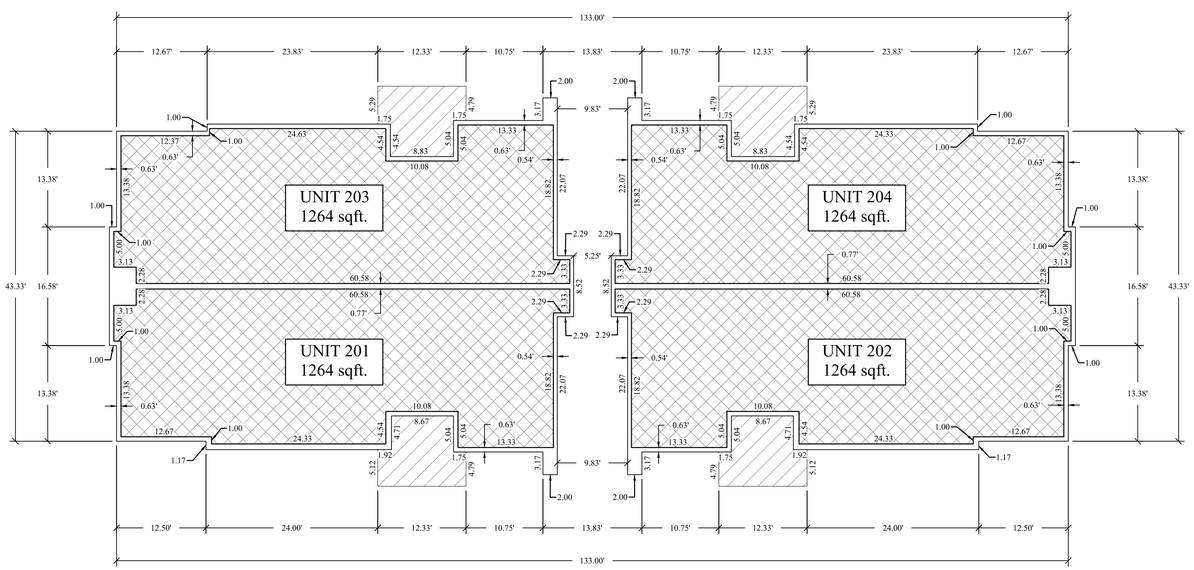

SECOND FLOOR

NOTES

1. ALL BUILDING WALLS ARE PARALLEL AND PERPENDICULAR TO REFERENCE BEARING SHOWN ON PLATS.

2. ALL AREAS ARE COMMON AREAS AND FACILITIES EXCEPT AS OTHERWISE SPECIFICALLY DESIGNATED.

ADDRESS TABLE

BUILDING NO.	UNIT NO.	ADDRESS
L	101	
L	102	
L	201	
L	202	
L	203	
L	204	
L	301	
L	302	
L	303	
L	304	

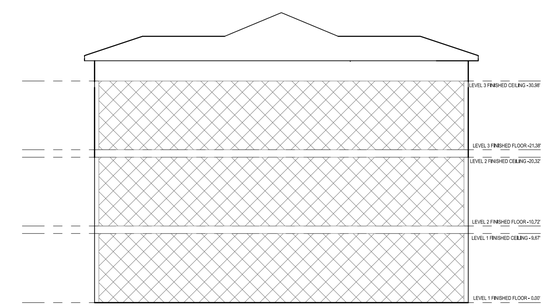

LIMITS OF COMMON AREA & PUE

LIMITS OF PRIVATE OWNERSHIP

LIMITS OF LIMITED COMMON AREA & PUE

GRAPHIC SCALE

10 0 5 10 20 40

(IN FEET)
1 inch = 10 ft.

LAKEFRONT @ VINEYARD TOWN CENTER

PHASE 1F, PLAT L CONDOMINIUMS

(AMENDING PORTIONS OF LOT 4, GENEVA PARK WEST SUBDIVISION)
PORTIONS OF SECTION 7, T6S, R2E,
SALT LAKE BASE & MERIDIAN
VINEYARD CITY, UTAH COUNTY, UTAH

2 OF 2	07/09/2020	SCALE: 1" = 10'

PREPARED FOR
EDGE HOMES
13702 SOUTH 200 WEST, SUITE B12
DRAPER, UTAH 84020
PH: 801-494-0150

FOCUS©
ENGINEERING AND SURVEYING, LLC
6949 SOUTH HIGH TECH DRIVE SUITE 200
MIDVALE, UT 84047 PH: (801) 352-0075
www.focusutah.com

SURVEYOR'S SEAL	CLERK - RECORDER SEAL		

Z:_2020\20-0169 Lakefront at Vineyard Town Center South Redesign\design 20-0169\dwg\sheets\FINAL PLATS\PHASE 1F\C2.1 Final Plat Phase 1F BLDG L.dwg

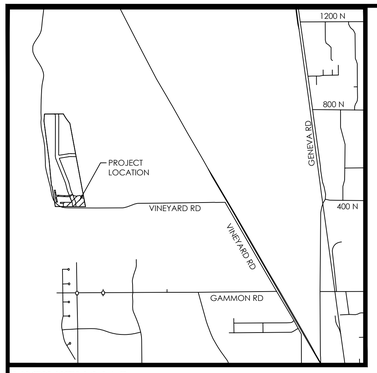

VICINITY MAP

N.T.S

LEGEND

- BOUNDARY
- SECTION LINE
- EASEMENT
- RIGHT-OF-WAY LINE
- BUILDING SETBACK
- EXISTING PROPERTY LINE
- SECTION MONUMENT (FOUND)
- STREET MONUMENT (TO BE SET)
- BOUNDARY MARKERS
- LIMITS OF COMMON AREA & PUE
- LIMITS OF PRIVATE OWNERSHIP
- LIMITS OF LIMITED COMMON AREA & PUE

Curve Table

CURVE	RADIUS	DELTA	LENGTH	CHORD DIRECTION	CHORD LENGTH
C1	219.00	2°13'05"	8.48	S89°41'50"W	8.48
C2	219.00	5°03'52"	19.36	S86°03'22"W	19.35

LAKEFRONT
@ VINEYARD TOWN CENTER
PHASE 1F, PLAT M
CONDOMINIUMS
(AMENDING PORTIONS OF LOT 4, GENEVA PARK WEST SUBDIVISION)

PORTIONS OF SECTION 7, T6S, R2E,
SALT LAKE BASE & MERIDIAN
VINEYARD CITY, UTAH COUNTY, UTAH

GRAPHIC SCALE

20 0 10 20 40 80

(IN FEET)
1 inch = 20 ft.

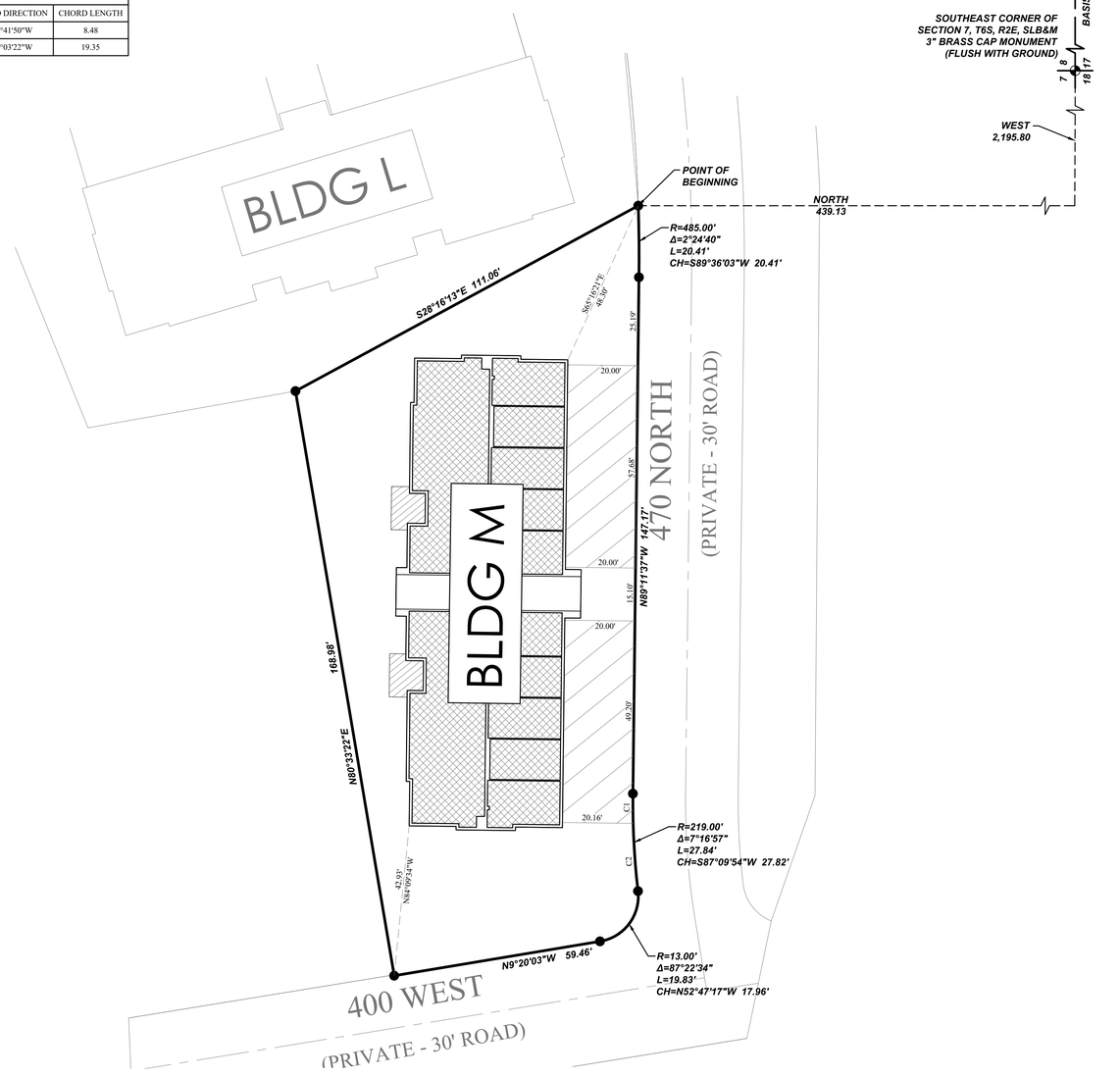

SURVEYOR'S CERTIFICATE

KNOWN ALL MEN BY THESE PRESENTS: I, SPENCER W. LLEWELYN, DO HEREBY CERTIFY THAT I AM A PROFESSIONAL LAND SURVEYOR, AND THAT I HOLD CERTIFICATE NO. #10516507 AS PRESCRIBED UNDER THE LAWS OF THE STATE OF UTAH. I FURTHER CERTIFY THAT AT THE REQUEST OF THE OWNER OF THE BELOW DESCRIBED LAND, I PERFORMED A SURVEY OF SAID LAND, THAT THE DESCRIPTION BELOW CORRECTLY DESCRIBES THE LAND SURFACE UPON WHICH WILL BE CONSTRUCTED , AND THIS RECORD OF SURVEY MAP, CONSISTING OF THREE (3) PAGES IS ACCURATE AND COMPLIES WITH THE PROVISIONS OF SECTION 57-8-13 (1) OF THE UTAH CONDOMINIUM OWNERSHIP ACT. I FURTHER CERTIFY THAT THE REFERENCE MARKERS SHOWN ON THIS PLAT ARE LOCATED AS SHOWN AND ARE SUFFICIENT TO READILY RETRACE OR RE-ESTABLISH THIS SURVEY.

Spencer W. Llewelyn
Professional Land Surveyor
Certificate No. 10516507

Date

BOUNDARY DESCRIPTION

A portion of Lot 4, GENEVA PARK WEST, according to the Official Plat thereof recorded March 14, 2013 as Entry No. 24721:2013 in the Office of the Utah County Recorder, located in the South Half of Section 7, Township 6 South, Range 2 East, Salt Lake Base & Meridian, in Vineyard, Utah, more particularly described as follows:

Beginning at a point located West 2,195.80 feet and North 439.13 feet from the Southeast Corner of Section 7, T6S, R2E, SLB&M (Basis of Bearing: S89°25'01"W along the Section line from the South 1/4 Corner of Section 8 to the Southeast Corner of Section 7, T6S, R2E, SLB&M); thence Westerly along the arc of a 485.00 feet radius non-tangent curve to the right (radius bears: N01°36'16"W) 20.41 feet through a central angle of 02°24'40" Chord: S89°36'03"W 20.41 feet; thence N89°11'37"W 147.17 feet; thence along the arc of a curve to the left with a radius of 219.00 feet a distance of 27.84 feet through a central angle of 07°16'57" Chord: S87°09'54"W 27.82 feet to a point of reverse curvature; thence along the arc of a curve to the right having a radius of 13.00 feet a distance of 19.83 feet through a central angle of 87°22'34" Chord: N52°47'17"W 17.96 feet; thence N09°20'03"W 59.46 feet; thence N80°33'22"E 168.98 feet; thence S28°16'13"E 111.06 feet to the point of beginning.

Contains: 15,960 square feet or 0.37 acres+/-

OWNER'S DEDICATION

KNOW ALL MEN BY THESE PRESENT THAT WE, ALL OF THE UNDERSIGNED OWNERS OF ALL OF THE TRACT OF LAND DESCRIBED HEREWITH AS

LAKEFRONT @ VINEYARD TOWN CENTER
PHASE 1F, PLAT M
CONDOMINIUMS

A UTAH CONDOMINIUM PROJECT LOCATED ON SAID TRACT OF LAND, HAVING CAUSED A SURVEY TO BE MADE AND THIS RECORD OF SURVEY MAP TO BE PREPARED, DO HEREBY GIVE OUR CONSENT TO THE RECORDATION OF THIS RECORD OF SURVEY MAP AND SUBMIT THIS PROPERTY TO THE UTAH CONDOMINIUM OWNERSHIP ACT. FURTHERMORE, WE DO HEREBY CONVEY TO ALL PUBLIC UTILITY AGENCIES, THEIR SUCCESSORS AND ASSIGNS, PERMANENT EASEMENTS AS SHOWN BY THE AREA MARKED "UTILITY EASEMENT" ON THE WITHIN PLAT FOR THE CONSTRUCTION AND MAINTENANCE OF ELECTRICAL, TELEPHONE, NATURAL GAS, SEWER AND WATER LINES AND APPURTENANCES, TOGETHER WITH THE RIGHT OF ACCESS THERETO

IN WITNESS WHEREOF, WE HAVE HEREUNTO SET OUR HANDS THIS _____ DAY OF _____ A.D. 20____

EDGE VINEYARD SHORES, LLC
STEVE MADDOX, MANAGER

LIMITED LIABILITY ACKNOWLEDGMENT

STATE OF UTAH
S.S.
COUNTY OF _____

ON THE ____ DAY OF _____ A.D. 20____ PERSONALLY APPEARED BEFORE ME , THE UNDERSIGNED NOTARY PUBLIC, IN AND FOR THE COUNTY OF _____, IN SAID STATE OF UTAH, _____, WHO AFTER BEING DULY SWORN, ACKNOWLEDGED TO ME THAT HE/SHE IS THE _____ OF _____ L.L.C., A UTAH L.L.C. AND THAT HE/SHE SIGNED THE OWNER'S DEDICATION FREELY AND VOLUNTARILY FOR AND IN BEHALF OF SAID LIMITED LIABILITY COMPANY FOR THE PURPOSES THEREIN MENTIONED.

MY COMMISSION EXPIRES:_____

A NOTARY PUBLIC COMMISSIONED IN UTAH RESIDING IN _____ COUNTY

MY COMMISSION No._____

PRINTED FULL NAME OF NOTARY

ACCEPTANCE BY LEGISLATIVE BODY

THE LEGISLATIVE BODY OF VINEYARD CITY OF UTAH COUNTY, APPROVES THIS SUBDIVISION AND HEREBY ACCEPTS THE DEDICATION OF ALL STREETS, EASEMENTS, AND OTHER PARCELS OF LAND INTENDED FOR PUBLIC PURPOSES FOR THE PERPETUAL USE OF THE PUBLIC THIS ____ DAY OF _____ 20___.

VINEYARD PLANNING COMMISSION CHAIR DATE: ___/___/_____	CITY ENGINEER DATE: ___/___/_____
CITY MANAGER DATE: ___/___/_____	CLERK/RECORDER DATE: ___/___/_____
CITY ATTORNEY DATE: ___/___/_____	

NOTES

1. #5 X 24" REBAR & CAP (FOCUS ENG) TO BE SET AT ALL LOT CORNERS. NAILS OR PLUGS TO BE SET IN TOP BACK OF CURB AT EXTENSION OF SIDE LOT LINES, IN LIEU OF REBAR AND CAPS AT FRONT LOT CORNERS.
2. ALL PUBLIC UTILITY EASEMENTS PLATTED HEREON ARE IN PERPETUITY FOR INSTALLATION, MAINTENANCE, REPAIR AND REPLACEMENT OF PUBLIC UTILITIES, SIDEWALKS AND APPURTENANT PARTS THEREOF AND THE RIGHT TO REASONABLE ACCESS TO GRANTOR'S PROPERTY FOR THE ABOVE DESCRIBED PURPOSES. THE EASEMENT SHALL RUN WITH THE REAL PROPERTY AND SHALL BE BINDING UPON THE GRANTOR AND THE GRANTOR'S SUCCESSORS, HEIRS, AND ASSIGNS.
3. ALL COMMON AREAS AND STREETS OR DRIVES TO SERVE AS PUBLIC UTILITY EASEMENTS.
4. ALL AREAS ARE COMMON AREAS AND FACILITIES EXCEPT AS OTHERWISE SPECIFICALLY DESIGNATED.
5. PLAT MUST BE RECORDED WITHIN 12 MONTHS OF FINAL PLAT APPROVAL, OR FOR PHASED DEVELOPMENTS, WITHIN 24 MONTHS OF RECORDATION OF MOST RECENT PHASE. THE FIRST FINAL PLAT APPROVAL WAS GRANTED ON THE ____ DAY OF ____, 20 _.
6. THE INSTALLATION OF IMPROVEMENTS SHALL CONFORM TO ALL CITY STANDARDS, RESOLUTIONS AND ORDINANCES.
7. BUILDING PERMITS WILL NOT BE ISSUED UNTIL ALL IMPROVEMENTS HAVE BEEN INSTALLED AND ACCEPTED BY THE CITY IN WRITING OR BONDED FOR.
8. BUILDING PERMITS WILL NOT BE ISSUED UNTIL ALL IMPACT AND CONNECTION FEES ARE PAID IN FULL PER CITY REGULATIONS IN EFFECT AT THE TIME OF BUILDING PERMIT ISSUANCE.
9. NO CITY MAINTENANCE SHALL BE PROVIDED FOR STREETS DESIGNATED AS "PRIVATE" ON THIS PLAT.
10. DRIVEWAYS AND LOT ACCESS SHALL BE LIMITED TO INTERIOR LOCAL SUBDIVISION STREETS ONLY.
11. DRAINAGE SHALL NOT CROSS PROPERTY LINES. EXCESS OR CONCENTRATED DRAINAGE SHALL BE CONTAINED ON SITE OR DIRECTED TO AN APPROVED DRAINAGE FACILITY.
12. VINEYARD ACCEPTS NO RESPONSIBILITY FOR ANY PROPERTY DAMAGE CAUSED BY GROUND WATER FLOODING.
13. ALL BUILDINGS AND DEVELOPMENT SHALL BE IN CONFORMANCE WITH THE VINEYARD ZONING ORDINANCE.
14. VINEYARD TOWN CENTER MASTER ASSOCIATION,
    13702 S. 200 W., DRAPER , UT. 84020

ROCKY MOUNTAIN POWER

1. PURSUANT TO UTAH CODE ANN. 54-3-27 THIS PLAT CONVEYS TO THE OWNER(S) OR OPERATORS OF UTILITY FACILITIES A PUBLIC UTILITY EASEMENT ALONG WITH ALL THE RIGHTS AND DUTIES DESCRIBED THEREIN.
2. PURSUANT TO UTAH CODE ANN. 17-27a-603(4)(c)(ii) ROCKY MOUNTAIN POWER ACCEPTS DELIVERY OF THE PUE AS DESCRIBED IN THIS PLAT AND APPROVES THIS PLAT SOLELY FOR THE PURPOSE OF CONFIRMING THAT THE PLAT CONTAINS PUBLIC UTILITY EASEMENTS AND APPROXIMATES THE LOCATION OF THE PUBLIC UTILITY EASEMENTS, BUT DOES NOT WARRANT THEIR PRECISE LOCATION. ROCKY MOUNTAIN POWER MAY REQUIRE OTHER EASEMENTS IN ORDER TO SERVE THIS DEVELOPMENT. THIS APPROVAL DOES NOT AFFECT ANY RIGHT THAT ROCKY MOUNTAIN POWER HAS UNDER:
   a. A RECORDED EASEMENT OR RIGHT-OF-WAY
   b. THE LAW APPLICABLE TO PRESCRIPTIVE RIGHTS
   c. TITLE 54, CHAPTER 8a, DAMAGE TO UNDERGROUND UTILITY FACILITIES OR
   d. ANY OTHER PROVISION OF LAW

DOMINION ENERGY CORPORATION

DOMINION ENERGY CORPORATION APPROVES THIS PLAT SOLELY FOR THE PURPOSE OF CONFIRMING THAT THE PLAT CONTAINS PUBLIC UTILITY EASEMENTS. DOMINION ENERGY CORPORATION MAY REQUIRE OTHER EASEMENTS IN ORDER TO SERVE THIS DEVELOPMENT. THIS APPROVAL DOES NOT CONSTITUTE ABROGATION OR WAIVER OF ANY OTHER EXISTING RIGHTS, OBLIGATIONS OR LIABILITIES PROVIDE BY LAW OR EQUITY. THIS APPROVAL DOES NOT CONSTITUTE ACCEPTANCE, APPROVAL OR ACKNOWLEDGEMENT OF ANY TERMS CONTAINED IN THE PLAT, INCLUDING THOSE SET FORTH IN THE OWNERS DEDICATION AND THE NOTES AND DOES NOT CONSTITUTE A GUARANTEE OF PARTICULAR TERMS OF NATURAL GAS SERVICE. FOR FURTHER INFORMATION PLEASE CONTACT DOMINION ENERGY CORPORATION'S
RIGHT-OF-WAY DEPARTMENT AT 800-366-8532.

LAKEFRONT
@ VINEYARD TOWN CENTER
PHASE 1F, PLAT M
CONDOMINIUMS
(AMENDING PORTIONS OF LOT 4, GENEVA PARK WEST SUBDIVISION)
PORTIONS OF SECTION 7, T6S, R2E,
SALT LAKE BASE & MERIDIAN
VINEYARD CITY, UTAH COUNTY, UTAH

1 OF 2	07/09/20	SCALE: 1" = 20'	SURVEYOR'S SEAL	CLERK - RECORDER SEAL		

PREPARED FOR
EDGE HOMES
13702 SOUTH 200 WEST, SUITE B12
DRAPER, UTAH 84020
PH: 801-494-0150

FOCUS ©
ENGINEERING AND SURVEYING, LLC
6949 SOUTH HIGH TECH DRIVE SUITE 200
MIDVALE, UT 84047 PH: (801) 352-0075
www.focusutah.com

Z:_2020\20-0169 Lakefront at Vineyard Town Center South Redesign\design 20-0169\dwg\sheets\FINAL PLATS\PHASE 1F\C2.0 Final Plat Phase 1F BLDG M.dwg

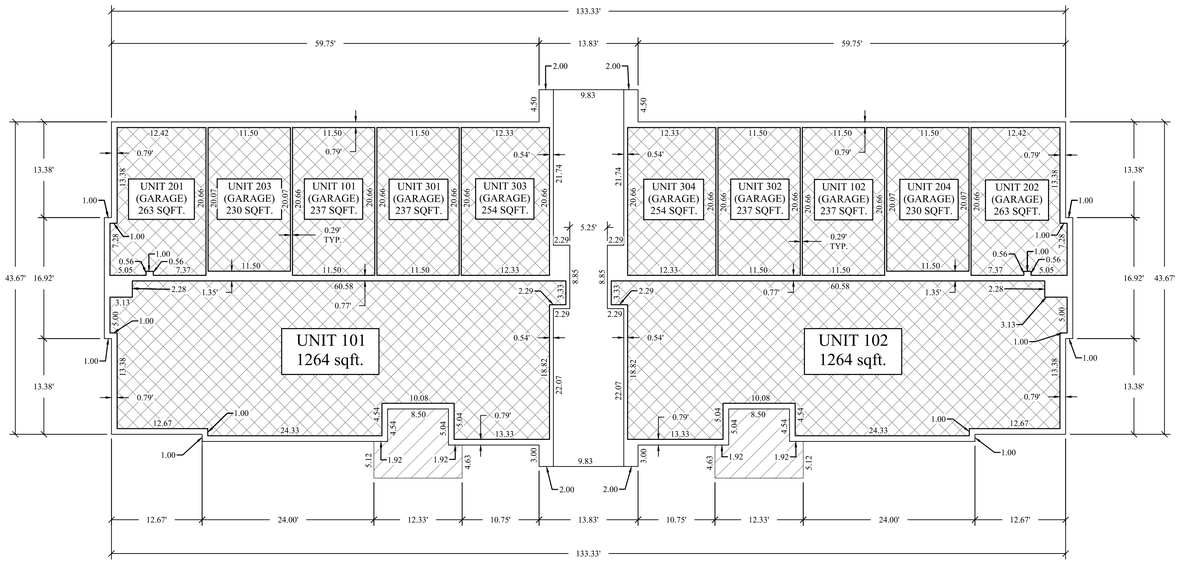

MAIN FLOOR

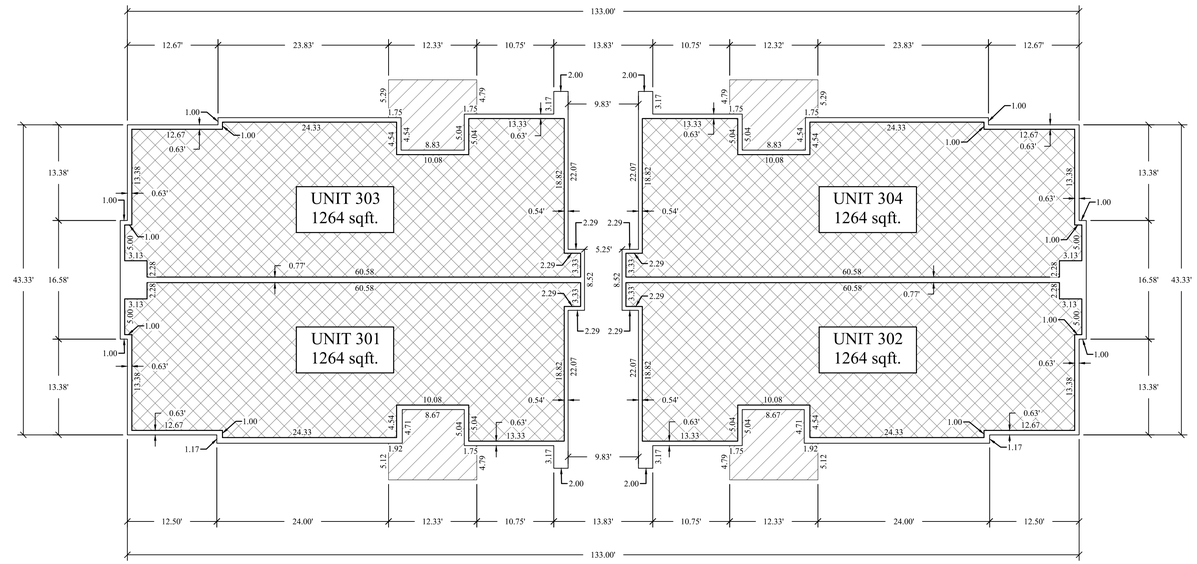

THIRD FLOOR

CONDOMINIUM DETAILS
BLDG. M

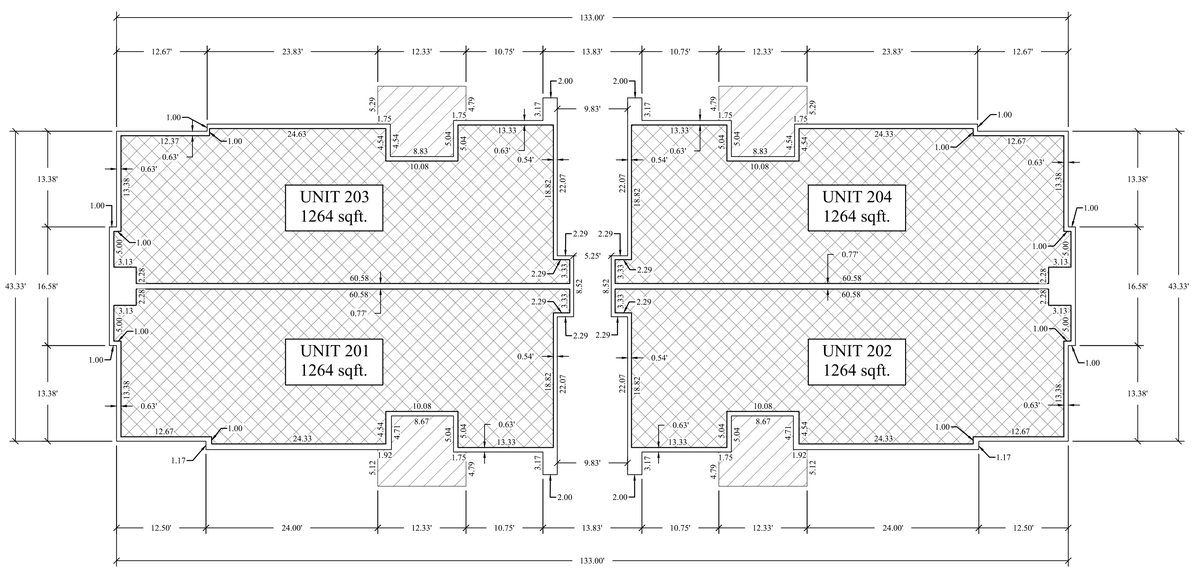

SECOND FLOOR

NOTES

1. ALL BUILDING WALLS ARE PARALLEL AND PERPENDICULAR TO REFERENCE BEARING SHOWN ON PLATS.

2. ALL AREAS ARE COMMON AREAS AND FACILITIES EXCEPT AS OTHERWISE SPECIFICALLY DESIGNATED.

ADDRESS TABLE

BUILDING NO.	UNIT NO.	ADDRESS
M	101	
M	102	
M	201	
M	202	
M	203	
M	204	
M	301	
M	302	
M	303	
M	304	

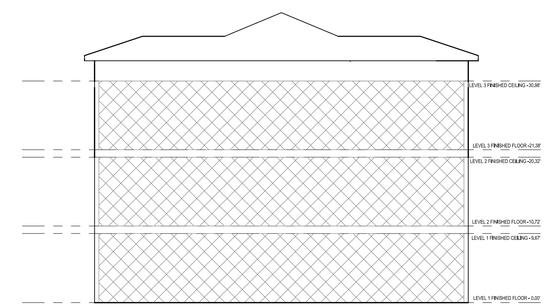

LIMITS OF COMMON AREA & PUE

LIMITS OF PRIVATE OWNERSHIP

LIMITS OF LIMITED COMMON AREA & PUE

GRAPHIC SCALE

10 0 5 10 20 40

(IN FEET)
1 inch = 10 ft.

LAKEFRONT @ VINEYARD TOWN CENTER

PHASE 1F, PLAT M CONDOMINIUMS

(AMENDING PORTIONS OF LOT 4, GENEVA PARK WEST SUBDIVISION)
PORTIONS OF SECTION 7, T6S, R2E,
SALT LAKE BASE & MERIDIAN
VINEYARD CITY, UTAH COUNTY, UTAH

2 OF 2	07/09/2020	SCALE: 1" = 10'

PREPARED FOR
EDGE HOMES
13702 SOUTH 200 WEST, SUITE B12
DRAPER, UTAH 84020
PH: 801-494-0150

FOCUS©
ENGINEERING AND SURVEYING, LLC
6949 SOUTH HIGH TECH DRIVE SUITE 200
MIDVALE, UT 84047 PH: (801) 352-0075
www.focusutah.com

SURVEYOR'S SEAL	CLERK - RECORDER SEAL		

Z:_2020\20-0169 Lakefront at Vineyard Town Center South Redesign\design 20-0169\dwg\sheets\FINAL PLATS\PHASE 1F\C2.1 Final Plat Phase 1F BLDG M.dwg

LAKEFRONT
@ VINEYARD TOWN CENTER
PHASE 1F, PLAT N
CONDOMINIUMS

(AMENDING PORTIONS OF LOT 4, GENEVA PARK WEST SUBDIVISION)
(ALSO AMENDING PHASE 1-D, LAKEFRONT @ VINEYARD TOWN CENTER CONDOMINIUMS)

PORTIONS OF SECTION 7, T6S, R2E,
SALT LAKE BASE & MERIDIAN
VINEYARD CITY, UTAH COUNTY, UTAH

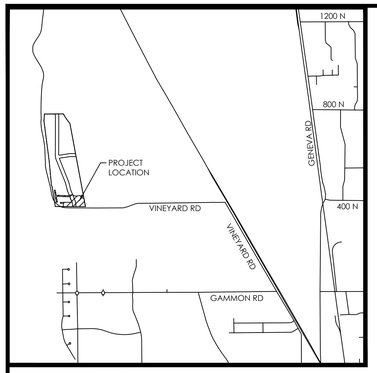

VICINITY MAP
N.T.S

LEGEND

- BOUNDARY
- SECTION LINE
- EASEMENT
- RIGHT-OF-WAY LINE
- BUILDING SETBACK
- EXISTING PROPERTY LINE
- SECTION MONUMENT (FOUND)
- STREET MONUMENT (TO BE SET)
- BOUNDARY MARKERS
- LIMITS OF COMMON AREA & PUE
- LIMITS OF PRIVATE OWNERSHIP
- LIMITS OF LIMITED COMMON AREA & PUE

GRAPHIC SCALE

20 0 10 20 40 80

(IN FEET)
1 inch = 20 ft.

Line Table		
LINE	DIRECTION	LENGTH
L1	S26°34'46"W	19.89

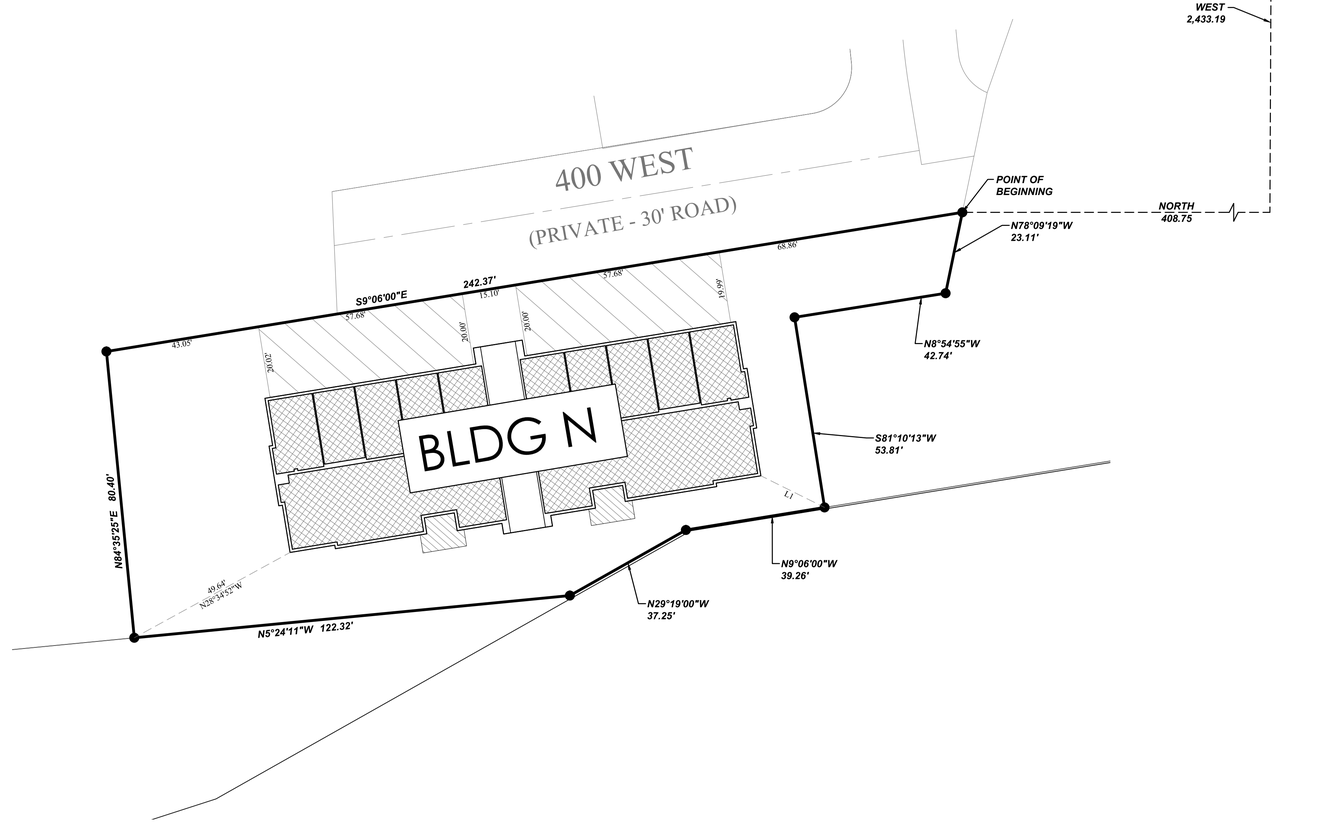

SURVEYOR'S CERTIFICATE

KNOWN ALL MEN BY THESE PRESENTS: I, SPENCER W. LLEWELYN, DO HEREBY CERTIFY THAT I AM A PROFESSIONAL LAND SURVEYOR, AND THAT I HOLD CERTIFICATE NO. #10516507 AS PRESCRIBED UNDER THE LAWS OF THE STATE OF UTAH. I FURTHER CERTIFY THAT AT THE REQUEST OF THE OWNER OF THE BELOW DESCRIBED LAND, I PERFORMED A SURVEY OF SAID LAND, THAT THE DESCRIPTION BELOW CORRECTLY DESCRIBES THE LAND SURFACE UPON WHICH WILL BE CONSTRUCTED , AND THIS RECORD OF SURVEY MAP, CONSISTING OF THREE (3) PAGES IS ACCURATE AND COMPLIES WITH THE PROVISIONS OF SECTION 57-8-13 (1) OF THE UTAH CONDOMINIUM OWNERSHIP ACT. I FURTHER CERTIFY THAT THE REFERENCE MARKERS SHOWN ON THIS PLAT ARE LOCATED AS SHOWN AND ARE SUFFICIENT TO READILY RETRACE OR RE-ESTABLISH THIS SURVEY.

Spencer W. Llewelyn
Professional Land Surveyor
Certificate No. 10516507

Date

BOUNDARY DESCRIPTION

A portion of Lot 4, GENEVA PARK WEST, according to the Official Plat thereof recorded March 14, 2013 as Entry No. 24721:2013 in the Office of the Utah County Recorder, located in the South Half of Section 7, Township 6 South, Range 2 East, Salt Lake Base & Meridian, in Vineyard, Utah, more particularly described as follows:

Beginning at a point located West 2,433.19 feet and North 408.75 feet from the Southeast Corner of Section 7, T6S, R2E, SLB&M (Basis of Bearing: S89°25'01"W along the Section line from the South 1/4 Corner of Section 8 to the Southeast Corner of Section 7, T6S, R2E, SLB&M); thence N78°09'19"W 23.11 feet; thence N08°54'55"W 42.74 feet; thence S81°10'13"W 53.81 feet to the Westerly line of said Lot 4, GENEVA PARK WEST SUBDIVISION; thence along said Westerly line the following three (3) courses: 1) N09°06'00"W 39.26 feet; 2) N29°19'00"W 37.25 feet; 3) N05°24'11"W 122.32 feet; thence N84°35'25"E 80.40 feet; thence S09°06'00"E 242.37 feet to the point of beginning.

Contains: 16,899 square feet or 0.39 acres+/-

OWNER'S DEDICATION

KNOW ALL MEN BY THESE PRESENT THAT WE, ALL OF THE UNDERSIGNED OWNERS OF ALL OF THE TRACT OF LAND DESCRIBED HEREWITH AS

LAKEFRONT @ VINEYARD TOWN CENTER
PHASE 1F, PLAT N
CONDOMINIUMS

A UTAH CONDOMINIUM PROJECT LOCATED ON SAID TRACT OF LAND, HAVING CAUSED A SURVEY TO BE MADE AND THIS RECORD OF SURVEY MAP TO BE PREPARED, DO HEREBY GIVE OUR CONSENT TO THE RECORDATION OF THIS RECORD OF SURVEY MAP AND SUBMIT THIS PROPERTY TO THE UTAH CONDOMINIUM OWNERSHIP ACT. FURTHERMORE, WE DO HEREBY CONVEY TO ALL PUBLIC UTILITY AGENCIES, THEIR SUCCESSORS AND ASSIGNS, PERMANENT EASEMENTS AS SHOWN BY THE AREA MARKED "UTILITY EASEMENT" ON THE WITHIN PLAT FOR THE CONSTRUCTION AND MAINTENANCE OF ELECTRICAL, TELEPHONE, NATURAL GAS, SEWER AND WATER LINES AND APPURTENANCES, TOGETHER WITH THE RIGHT OF ACCESS THERETO

IN WITNESS WHEREOF, WE HAVE HEREUNTO SET OUR HANDS THIS _____ DAY OF _____ A.D. 20____

EDGE VINEYARD SHORES, LLC
STEVE MADDOX, MANAGER

LIMITED LIABILITY ACKNOWLEDGMENT

STATE OF UTAH
S.S.
COUNTY OF _____

ON THE ____ DAY OF _____ A.D. 20 ____ PERSONALLY APPEARED BEFORE ME , THE UNDERSIGNED NOTARY PUBLIC, IN AND FOR THE COUNTY OF _____, IN SAID STATE OF UTAH, _____, WHO AFTER BEING DULY SWORN, ACKNOWLEDGED TO ME THAT HE/SHE IS THE _____ OF _____ L.L.C., A UTAH L.L.C. AND THAT HE/SHE SIGNED THE OWNER'S DEDICATION FREELY AND VOLUNTARILY FOR AND IN BEHALF OF SAID LIMITED LIABILITY COMPANY FOR THE PURPOSES THEREIN MENTIONED.

MY COMMISSION EXPIRES:_____

A NOTARY PUBLIC COMMISSIONED IN UTAH RESIDING IN _____ COUNTY

MY COMMISSION No._____

PRINTED FULL NAME OF NOTARY

ACCEPTANCE BY LEGISLATIVE BODY

THE LEGISLATIVE BODY OF VINEYARD CITY OF UTAH COUNTY, APPROVES THIS SUBDIVISION AND HEREBY ACCEPTS THE DEDICATION OF ALL STREETS, EASEMENTS, AND OTHER PARCELS OF LAND INTENDED FOR PUBLIC PURPOSES FOR THE PERPETUAL USE OF THE PUBLIC THIS ____ DAY OF _____20___.

VINEYARD PLANNING COMMISSION CHAIR DATE: ____/____/_____	CITY ENGINEER DATE: ____/____/_____
CITY MANAGER DATE: ____/____/_____	CLERK/RECORDER DATE: ____/____/_____
CITY ATTORNEY DATE: ____/____/_____	

LAKEFRONT
@ VINEYARD TOWN CENTER
PHASE 1F, PLAT N
CONDOMINIUMS
(AMENDING PORTIONS OF LOT 4, GENEVA PARK WEST SUBDIVISION)
(ALSO AMENDING PHASE 1-D, LAKEFRONT @ VINEYARD TOWN CENTER CONDOMINIUMS)
PORTIONS OF SECTION 7, T6S, R2E,
SALT LAKE BASE & MERIDIAN
VINEYARD CITY, UTAH COUNTY, UTAH

NOTES

1. #5 X 24" REBAR & CAP (FOCUS ENG) TO BE SET AT ALL LOT CORNERS. NAILS OR PLUGS TO BE SET IN TOP BACK OF CURB AT EXTENSION OF SIDE LOT LINES, IN LIEU OF REBAR AND CAPS AT FRONT LOT CORNERS.
2. ALL PUBLIC UTILITY EASEMENTS PLATTED HEREON ARE IN PERPETUITY FOR INSTALLATION, MAINTENANCE, REPAIR AND REPLACEMENT OF PUBLIC UTILITIES, SIDEWALKS AND APPURTENANT PARTS THEREOF AND THE RIGHT TO REASONABLE ACCESS TO GRANTOR'S PROPERTY FOR THE ABOVE DESCRIBED PURPOSES. THE EASEMENT SHALL RUN WITH THE REAL PROPERTY AND SHALL BE BINDING UPON THE GRANTOR AND THE GRANTOR'S SUCCESSORS, HEIRS, AND ASSIGNS.
3. ALL COMMON AREAS AND STREETS OR DRIVES TO SERVE AS PUBLIC UTILITY EASEMENTS.
4. ALL AREAS ARE COMMON AREAS AND FACILITIES EXCEPT AS OTHERWISE SPECIFICALLY DESIGNATED.
5. PLAT MUST BE RECORDED WITHIN 12 MONTHS OF FINAL PLAT APPROVAL, OR FOR PHASED DEVELOPMENTS, WITHIN 24 MONTHS OF RECORDATION OF MOST RECENT PHASE. THE FIRST FINAL PLAT APPROVAL WAS GRANTED ON THE ____ DAY OF ____, 20 _.
6. THE INSTALLATION OF IMPROVEMENTS SHALL CONFORM TO ALL CITY STANDARDS, RESOLUTIONS AND ORDINANCES.
7. BUILDING PERMITS WILL NOT BE ISSUED UNTIL ALL IMPROVEMENTS HAVE BEEN INSTALLED AND ACCEPTED BY THE CITY IN WRITING OR BONDED FOR.
8. BUILDING PERMITS WILL NOT BE ISSUED UNTIL ALL IMPACT AND CONNECTION FEES ARE PAID IN FULL PER CITY REGULATIONS IN EFFECT AT THE TIME OF BUILDING PERMIT ISSUANCE.
9. NO CITY MAINTENANCE SHALL BE PROVIDED FOR STREETS DESIGNATED AS "PRIVATE" ON THIS PLAT.
10. DRIVEWAYS AND LOT ACCESS SHALL BE LIMITED TO INTERIOR LOCAL SUBDIVISION STREETS ONLY.
11. DRAINAGE SHALL NOT CROSS PROPERTY LINES. EXCESS OR CONCENTRATED DRAINAGE SHALL BE CONTAINED ON SITE OR DIRECTED TO AN APPROVED DRAINAGE FACILITY.
12. VINEYARD ACCEPTS NO RESPONSIBILITY FOR ANY PROPERTY DAMAGE CAUSED BY GROUND WATER FLOODING.
13. ALL BUILDINGS AND DEVELOPMENT SHALL BE IN CONFORMANCE WITH THE VINEYARD ZONING ORDINANCE.
14. VINEYARD TOWN CENTER MASTER ASSOCIATION,
    13702 S. 200 W., DRAPER , UT. 84020

ROCKY MOUNTAIN POWER

1. PURSUANT TO UTAH CODE ANN. 54-3-27 THIS PLAT CONVEYS TO THE OWNER(S) OR OPERATORS OF UTILITY FACILITIES A PUBLIC UTILITY EASEMENT ALONG WITH ALL THE RIGHTS AND DUTIES DESCRIBED THEREIN.
2. PURSUANT TO UTAH CODE ANN. 17-27a-603(4)(c)(ii) ROCKY MOUNTAIN POWER ACCEPTS DELIVERY OF THE PUE AS DESCRIBED IN THIS PLAT AND APPROVES THIS PLAT SOLELY FOR THE PURPOSE OF CONFIRMING THAT THE PLAT CONTAINS PUBLIC UTILITY EASEMENTS AND APPROXIMATES THE LOCATION OF THE PUBLIC UTILITY EASEMENTS, BUT DOES NOT WARRANT THEIR PRECISE LOCATION. ROCKY MOUNTAIN POWER MAY REQUIRE OTHER EASEMENTS IN ORDER TO SERVE THIS DEVELOPMENT. THIS APPROVAL DOES NOT AFFECT ANY RIGHT THAT ROCKY MOUNTAIN POWER HAS UNDER:
   a. A RECORDED EASEMENT OR RIGHT-OF-WAY
   b. THE LAW APPLICABLE TO PRESCRIPTIVE RIGHTS
   c. TITLE 54, CHAPTER 8a, DAMAGE TO UNDERGROUND UTILITY FACILITIES OR
   d. ANY OTHER PROVISION OF LAW

DOMINION ENERGY CORPORATION

DOMINION ENERGY CORPORATION APPROVES THIS PLAT SOLELY FOR THE PURPOSE OF CONFIRMING THAT THE PLAT CONTAINS PUBLIC UTILITY EASEMENTS. DOMINION ENERGY CORPORATION MAY REQUIRE OTHER EASEMENTS IN ORDER TO SERVE THIS DEVELOPMENT. THIS APPROVAL DOES NOT CONSTITUTE ABROGATION OR WAIVER OF ANY OTHER EXISTING RIGHTS, OBLIGATIONS OR LIABILITIES PROVIDE BY LAW OR EQUITY. THIS APPROVAL DOES NOT CONSTITUTE ACCEPTANCE, APPROVAL OR ACKNOWLEDGEMENT OF ANY TERMS CONTAINED IN THE PLAT, INCLUDING THOSE SET FORTH IN THE OWNERS DEDICATION AND THE NOTES AND DOES NOT CONSTITUTE A GUARANTEE OF PARTICULAR TERMS OF NATURAL GAS SERVICE. FOR FURTHER INFORMATION PLEASE CONTACT DOMINION ENERGY CORPORATION'S
RIGHT-OF-WAY DEPARTMENT AT 800-366-8532.

1 OF 2	07/09/20	SCALE: 1" = 20'	SURVEYOR'S SEAL	CLERK - RECORDER SEAL		

PREPARED FOR
EDGE HOMES
13702 SOUTH 200 WEST, SUITE B12
DRAPER, UTAH 84020
PH: 801-494-0150

FOCUS ©
ENGINEERING AND SURVEYING, LLC
6949 SOUTH HIGH TECH DRIVE SUITE 200
MIDVALE, UT 84047 PH: (801) 352-0075
www.focusutah.com

Z:_2020\20-0169 Lakefront at Vineyard Town Center South Redesign\design 20-0169\dwg\sheets\FINAL PLATS\PHASE 1F\22.0 Final Plat Phase 1F BLDG N.dwg

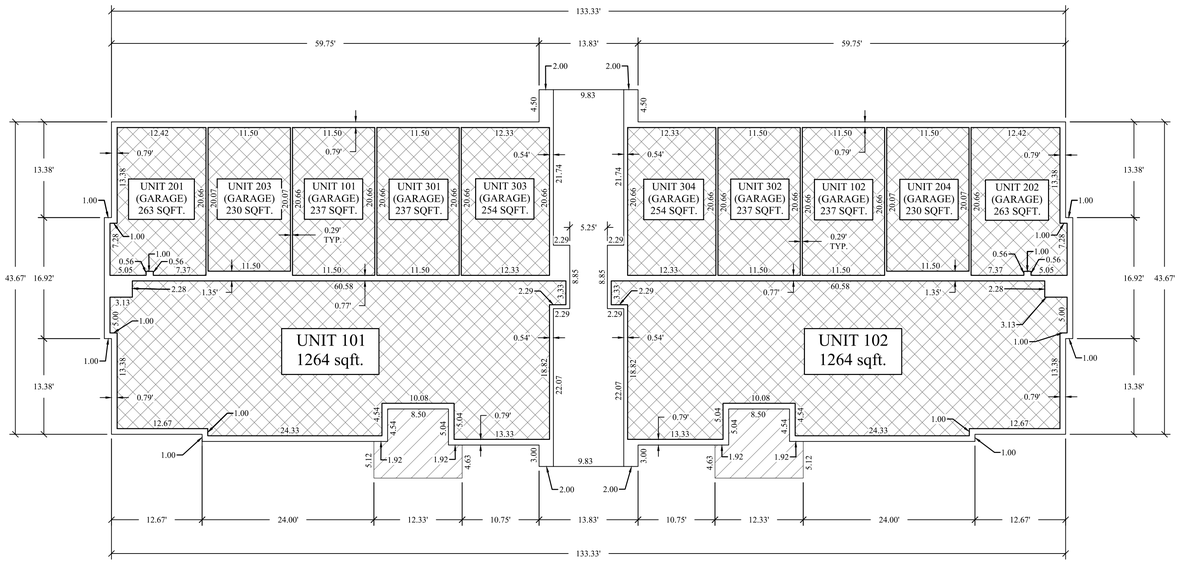

MAIN FLOOR

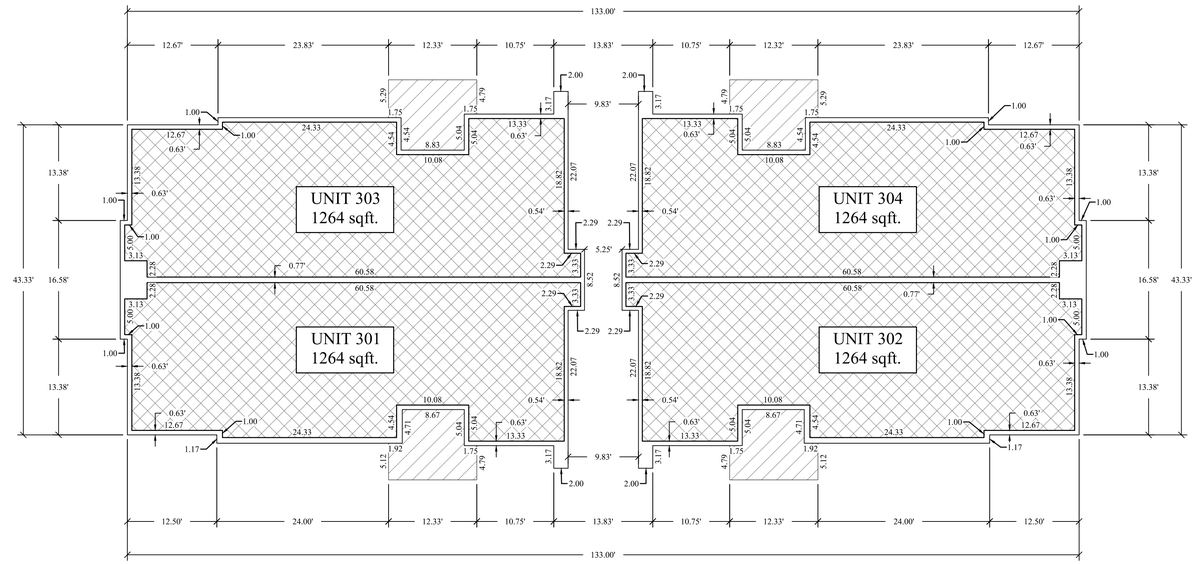

THIRD FLOOR

CONDOMINIUM DETAILS
BLDG. N

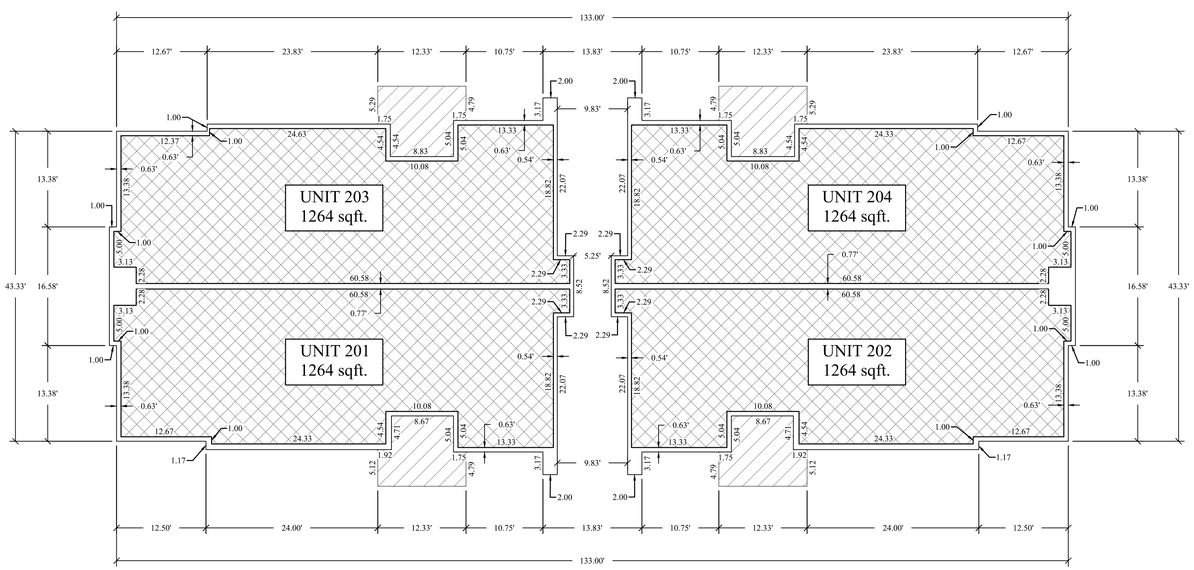

SECOND FLOOR

NOTES

1. ALL BUILDING WALLS ARE PARALLEL AND PERPENDICULAR TO REFERENCE BEARING SHOWN ON PLATS.

2. ALL AREAS ARE COMMON AREAS AND FACILITIES EXCEPT AS OTHERWISE SPECIFICALLY DESIGNATED.

ADDRESS TABLE

BUILDING NO.	UNIT NO.	ADDRESS
N	101	
N	102	
N	201	
N	202	
N	203	
N	204	
N	301	
N	302	
N	303	
N	304	

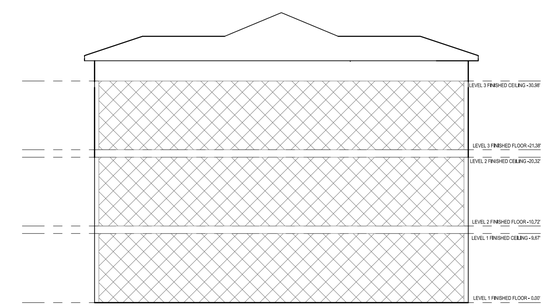

LIMITS OF COMMON AREA & PUE

LIMITS OF PRIVATE OWNERSHIP

LIMITS OF LIMITED COMMON AREA & PUE

GRAPHIC SCALE

10 0 5 10 20 40

(IN FEET)
1 inch = 10 ft.

LAKEFRONT @ VINEYARD TOWN CENTER

PHASE 1F, PLAT N CONDOMINIUMS

(AMENDING PORTIONS OF LOT 4, GENEVA PARK WEST SUBDIVISION)
PORTIONS OF SECTION 7, T6S, R2E,
SALT LAKE BASE & MERIDIAN
VINEYARD CITY, UTAH COUNTY, UTAH

2 OF 2	07/09/2020	SCALE: 1" = 10'

PREPARED FOR
EDGE HOMES
13702 SOUTH 200 WEST, SUITE B12
DRAPER, UTAH 84020
PH: 801-494-0150

FOCUS©
ENGINEERING AND SURVEYING, LLC
6949 SOUTH HIGH TECH DRIVE SUITE 200
MIDVALE, UT 84047 PH: (801) 352-0075
www.focusutah.com

SURVEYOR'S SEAL	CLERK - RECORDER SEAL		

Z:_2020\20-0169 Lakefront at Vineyard Town Center South Redesign\design 20-0169\dwg\sheets\FINAL PLATS\PHASE 1F\C2.1 Final Plat Phase 1F BLDG N.dwg

PHASE 1F
LAKEFRONT @ VINEYARD TOWN CENTER
SUBDIVISION

(AMENDING PORTIONS OF LOT 3 & LOT 4, GENEVA PARK WEST SUBDIVISION)
PORTIONS OF SECTION 7, T6S, R2E,
SALT LAKE BASE & MERIDIAN
VINEYARD CITY, UTAH COUNTY, UTAH

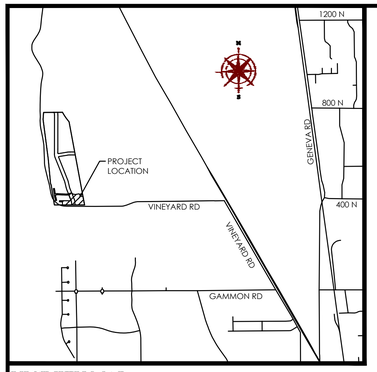

VICINITY MAP
N.T.S

LEGEND

- BOUNDARY
- SECTION LINE
- EASEMENT
- RIGHT-OF-WAY LINE
- BUILDING SETBACK
- EXISTING PROPERTY LINE
- SECTION MONUMENT (FOUND)
- STREET MONUMENT (TO BE SET)
- BOUNDARY MARKERS
- LIMITS OF COMMON AREA & PUE
- LIMITS OF PRIVATE OWNERSHIP
- LIMITS OF LIMITED COMMON AREA & PUE
- FEMA ZONE X & AE

NOTES

1. #5 X 24" REBAR & CAP (FOCUS ENG) TO BE SET AT ALL LOT CORNERS. NAILS OR PLUGS TO BE SET IN TOP BACK OF CURB AT EXTENSION OF SIDE LOT LINES, IN LIEU OF REBAR AND CAPS AT FRONT LOT CORNERS.

2. ALL PUBLIC UTILITY EASEMENTS PLATTED HEREON ARE IN PERPETUITY FOR INSTALLATION, MAINTENANCE, REPAIR AND REPLACEMENT OF PUBLIC UTILITIES, SIDEWALKS AND APPURTENANT PARTS THEREOF AND THE RIGHT TO REASONABLE ACCESS TO GRANTOR'S PROPERTY FOR THE ABOVE DESCRIBED PURPOSES. THE EASEMENT SHALL RUN WITH THE REAL PROPERTY AND SHALL BE BINDING UPON THE GRANTOR AND THE GRANTOR'S SUCCESSORS, HEIRS, AND ASSIGNS.

3. ALL COMMON AREAS AND STREETS OR DRIVES TO SERVE AS PUBLIC UTILITY EASEMENTS.

4. ALL AREAS ARE COMMON AREAS AND FACILITIES EXCEPT AS OTHERWISE SPECIFICALLY DESIGNATED.

5. PLAT MUST BE RECORDED WITHIN 12 MONTHS OF FINAL PLAT APPROVAL, OR FOR PHASED DEVELOPMENTS, WITHIN 24 MONTHS OF RECORDATION OF MOST RECENT PHASE. THE FIRST FINAL PLAT APPROVAL WAS GRANTED ON THE ____ DAY OF _____, 20__.

6. THE INSTALLATION OF IMPROVEMENTS SHALL CONFORM TO ALL CITY STANDARDS, RESOLUTIONS AND ORDINANCES.

7. BUILDING PERMITS WILL NOT BE ISSUED UNTIL ALL IMPROVEMENTS HAVE BEEN INSTALLED AND ACCEPTED BY THE CITY IN WRITING OR BONDED FOR.

8. BUILDING PERMITS WILL NOT BE ISSUED UNTIL ALL IMPACT AND CONNECTION FEES ARE PAID IN FULL PER CITY REGULATIONS IN EFFECT AT THE TIME OF BUILDING PERMIT ISSUANCE.

9. NO CITY MAINTENANCE SHALL BE PROVIDED FOR STREETS DESIGNATED AS "PRIVATE" ON THIS PLAT.

10. DRIVEWAYS AND LOT ACCESS SHALL BE LIMITED TO INTERIOR LOCAL SUBDIVISION STREETS ONLY.

11. DRAINAGE SHALL NOT CROSS PROPERTY LINES. EXCESS OR CONCENTRATED DRAINAGE SHALL BE CONTAINED ON SITE OR DIRECTED TO AN APPROVED DRAINAGE FACILITY.

12. VINEYARD ACCEPTS NO RESPONSIBILITY FOR ANY PROPERTY DAMAGE CAUSED BY GROUND WATER FLOODING.

13.ALL BUILDINGS AND DEVELOPMENT SHALL BE IN CONFORMANCE WITH THE VINEYARD ZONING ORDINANCE.

Curve Table

CURVE	RADIUS	DELTA	LENGTH	CHORD DIRECTION	CHORD LENGTH
C1	500.00	7°55'39"	69.18	S17°49'31"E	69.12
C2	500.00	7°55'39"	69.18	S17°49'31"E	69.12
C3	419.50	7°55'39"	58.04	S17°49'31"E	58.00
C4	13.00	90°00'00"	20.42	S55°34'45"E	18.38
C5	189.00	7°45'02"	25.57	S86°55'52"W	25.55
C6	515.00	11°24'48"	102.59	S85°05'59"W	102.42
C8	13.00	86°44'43"	19.68	S57°14'03"E	17.86
C9	2.00	78°47'25"	2.75	N61°11'03"W	2.54
C10	434.50	7°55'39"	60.12	S17°49'31"E	60.07
C11	540.50	5°45'51"	54.38	N16°44'37"W	54.35
C12	3.00	86°44'43"	4.54	N57°14'03"W	4.12
C13	204.00	9°54'23"	35.27	N85°51'12"E	35.23
C14	500.00	11°24'48"	99.60	N85°05'59"E	99.43
C15	459.50	7°55'39"	63.58	S17°49'31"E	63.53
C16	449.50	7°55'39"	62.19	N17°49'31"W	62.14
C17	13.00	8°21'27"	1.90	N75°14'31"E	1.89
C18	13.00	3°15'17"	0.74	S77°45'57"W	0.74

Line Table

LINE	DIRECTION	LENGTH
L1	N09°06'00"W	14.87
L2	N80°54'00"E	4.00
L3	N89°31'19"E	28.51
L4	S67°17'01"W	23.60
L5	S79°23'35"W	10.25
L6	S79°25'24"W	10.25
L7	N02°57'12"E	5.27
L8	S21°47'20"E	13.76
L9	N79°25'15"E	30.00

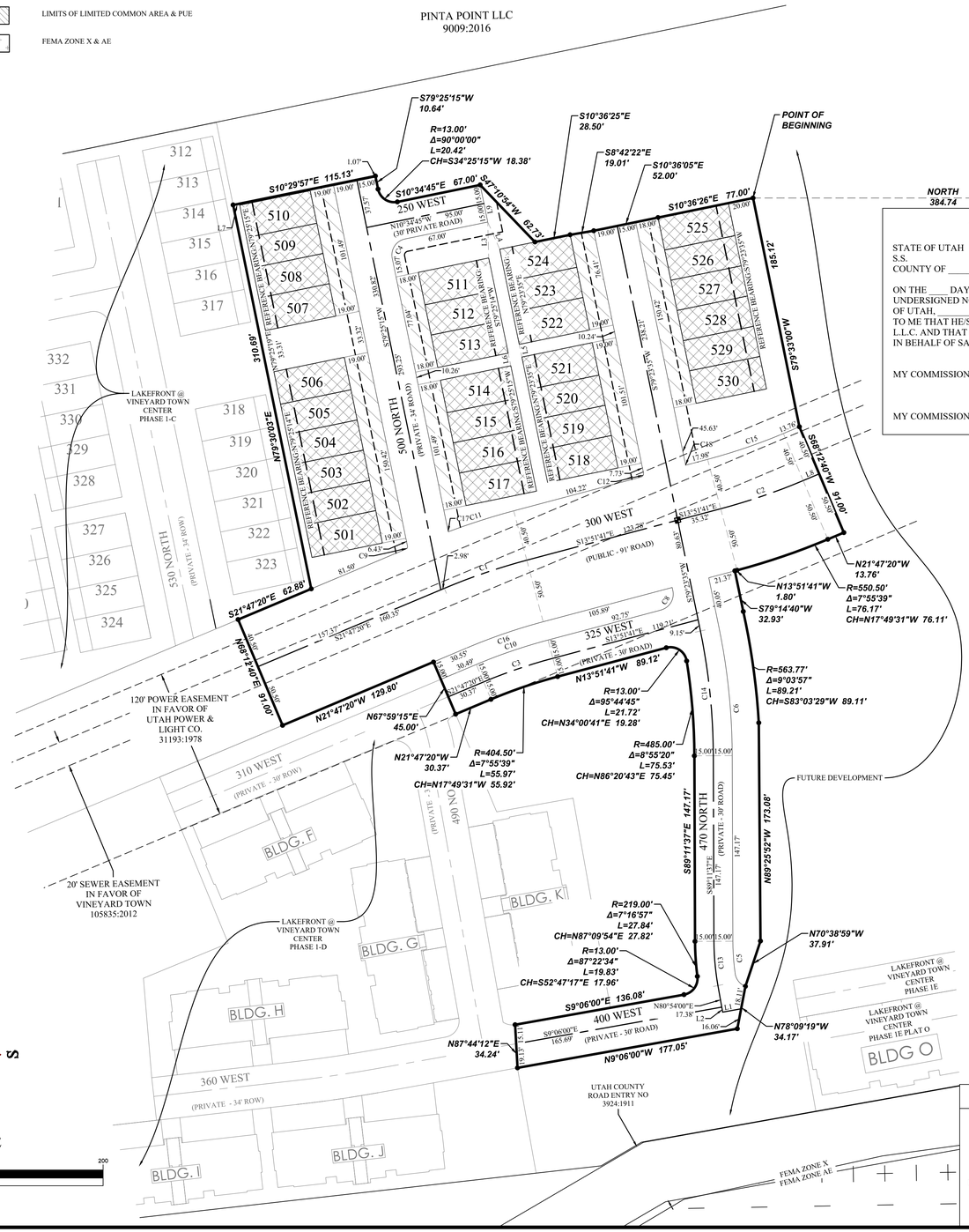

GRAPHIC SCALE
(IN FEET)
1 inch = 50 ft.

SURVEYOR'S CERTIFICATE

I, Spencer W. Llewelyn, do hereby certify that I am a Professional Land Surveyor, and that I hold Certificate No. 10516507 in accordance with Title 58, Chapter 22 of Utah State Code. I further certify by authority of the owner(s) that I have completed a Survey of the property described on this Plat in accordance with Section 17-23-17 of said Code, and have subdivided said tract of land into lots, blocks, streets, and easements, and the same has, or will be correctly surveyed, staked and monumented on the ground as shown on this Plat, and that this Plat is true and correct.

Spencer W. Llewelyn
Professional Land Surveyor
Certificate No. 10516507

Date

BOUNDARY DESCRIPTION

A portion of Lot 3 & Lot 4, GENEVA PARK WEST, according to the Official Plat thereof recorded March 14, 2013 as Entry No. 24721:2013 in the Office of the Utah County Recorder, located in the South Half of Section 7, Township 6 South, Range 2 East, Salt Lake Base & Meridian, in Vineyard, Utah, more particularly described as follows:

Beginning at a point located West 1,774.72 feet and North 384.74 feet from the Southeast Corner of Section 7, T6S, R2E, SLB&M (Basis of Bearing: S89°25'01"W along the Section line from the South 1/4 Corner of Section 8 to the Southeast Corner of Section 7, T6S, R2E, SLB&M); thence S79°33'00"W 185.12 feet; thence S68°12'40"W 91.00 feet; thence N21°47'20"W 13.76 feet; thence along the arc of a curve to the right with a radius of 550.50 feet a distance of 76.17 feet through a central angle of 07°55'39" Chord: N17°49'31"W 76.11 feet; thence N13°51'41"W 1.80 feet; thence S79°14'40"W 32.93 feet; thence Westerly along the arc of a non-tangent curve to the right having a radius of 563.77 feet (radius bears: N11°28'30"W) a distance of 89.21 feet through a central angle of 09°03'57" Chord: S83°03'29"W 89.11 feet; thence N89°25'52"W 173.08 feet; thence N70°36'35"W 37.71 feet; thence N78°09'19"W 34.37 feet; thence N09°06'00"W 177.05 feet; thence N87°44'12"E 34.24 feet; thence S09°06'00"E 136.08 feet; thence along the arc of a curve to the left with a radius of 13.00 feet a distance of 19.83 feet through a central angle of 87°22'34" Chord: S52°47'17"E 17.96 feet to a point of reverse curvature; thence along the arc of a curve to the right having a radius of 219.00 feet a distance of 27.84 feet through a central angle of 07°16'57" Chord: N87°09'54"E 27.82 feet; thence S89°11'37"E 147.17 feet; thence along the arc of a curve to the left with a radius of 485.00 feet a distance of 75.53 feet through a central angle of 08°55'20" Chord: N86°20'43"E 75.45 feet to a point of compound curvature; thence along the arc of a curve to the left with a radius of 13.00 feet a distance of 21.72 feet through a central angle of 95°44'45" Chord: N34°00'41"E 19.28 feet; thence N13°51'41"W 89.12 feet; thence along the arc of a curve to the left with a radius of 404.50 feet a distance of 55.97 feet through a central angle of 07°55'39" Chord: N17°49'31"W 55.92 feet; thence N21°47'20"W 30.37 feet; thence N67°59'15"E 45.00 feet; thence N21°47'20"W 129.80 feet; thence N68°12'40"E 91.00 feet; thence S21°47'20"E 62.88 feet; thence N79°30'03"E 310.69 feet; thence S10°29'57"E 115.13 feet; thence S79°25'15"W 10.64 feet; thence along the arc of a curve to the left with a radius of 13.00 feet a distance of 20.42 feet through a central angle of 90°00'00" Chord: S34°25'15"W 18.38 feet; thence S10°34'45"E 67.00 feet; thence S47°10'54"W 62.73 feet; thence S10°36'25"E 28.50 feet; thence S08°42'22"E 19.01 feet; thence S10°36'05"E 52.00 feet; thence S10°36'26"E 77.00 feet to the point of beginning.

Contains: 3.95 acres+/-

LIMITED LIABILITY ACKNOWLEDGMENT

STATE OF UTAH
S.S.
COUNTY OF _____

ON THE ____ DAY OF _____ A.D. 20____ PERSONALLY APPEARED BEFORE ME , THE UNDERSIGNED NOTARY PUBLIC, IN AND FOR THE COUNTY OF _____, IN SAID STATE OF UTAH, _____, WHO AFTER BEING DULY SWORN, ACKNOWLEDGED TO ME THAT HE/SHE IS THE _____ OF _____ L.L.C., A UTAH L.L.C. AND THAT HE/SHE SIGNED THE OWNER'S DEDICATION FREELY AND VOLUNTARILY FOR AND IN BEHALF OF SAID LIMITED LIABILITY COMPANY FOR THE PURPOSES THEREIN MENTIONED.

MY COMMISSION EXPIRES:_____

A NOTARY PUBLIC COMMISSIONED IN UTAH RESIDING IN _____ COUNTY

MY COMMISSION No._____

PRINTED FULL NAME OF NOTARY

ROCKY MOUNTAIN POWER

1. PURSUANT TO UTAH CODE ANN. 54-3-27 THIS PLAT CONVEYS TO THE OWNER(S) OR OPERATORS OF UTILITY FACILITIES A PUBLIC UTILITY EASEMENT ALONG WITH ALL THE RIGHTS AND DUTIES DESCRIBED THEREIN.
2. PURSUANT TO UTAH CODE ANN. 17-27a-603(4)(c)(ii) ROCKY MOUNTAIN POWER ACCEPTS DELIVERY OF THE PUE AS DESCRIBED IN THIS PLAT AND APPROVES THIS PLAT SOLELY FOR THE PURPOSE OF CONFIRMING THAT THE PLAT CONTAINS PUBLIC UTILITY EASEMENTS AND APPROXIMATES THE LOCATION OF THE PUBLIC UTILITY EASEMENTS, BUT DOES NOT WARRANT THEIR PRECISE LOCATION. ROCKY MOUNTAIN POWER MAY REQUIRE OTHER EASEMENTS IN ORDER TO SERVE THIS DEVELOPMENT. THIS APPROVAL DOES NOT AFFECT ANY RIGHT THAT ROCKY MOUNTAIN POWER HAS UNDER:
   a. A RECORDED EASEMENT OR RIGHT-OF-WAY
   b. THE LAW APPLICABLE TO PRESCRIPTIVE RIGHTS
   c. TITLE 54, CHAPTER 8a, DAMAGE TO UNDERGROUND UTILITY FACILITIES OR
   d. ANY OTHER PROVISION OF LAW

DOMINION ENERGY CORPORATION

DOMINION ENERGY CORPORATION APPROVES THIS PLAT SOLELY FOR THE PURPOSE OF CONFIRMING THAT THE PLAT CONTAINS PUBLIC UTILITY EASEMENTS. DOMINION ENERGY CORPORATION MAY REQUIRE OTHER EASEMENTS IN ORDER TO SERVE THIS DEVELOPMENT. THIS APPROVAL DOES NOT CONSTITUTE ABROGATION OR WAIVER OF ANY OTHER EXISTING RIGHTS, OBLIGATIONS OR LIABILITIES PROVIDE BY LAW OR EQUITY. THIS APPROVAL DOES NOT CONSTITUTE ACCEPTANCE, APPROVAL OR ACKNOWLEDGEMENT OF ANY TERMS CONTAINED IN THE PLAT, INCLUDING THOSE SET FORTH IN THE OWNERS DEDICATION AND THE NOTES AND DOES NOT CONSTITUTE A GUARANTEE OF PARTICULAR TERMS OF NATURAL GAS SERVICE. FOR FURTHER INFORMATION PLEASE CONTACT DOMINION ENERGY CORPORATION'S
RIGHT-OF-WAY DEPARTMENT AT 800-366-8532.

OWNER'S DEDICATION

KNOW ALL MEN BY THESE PRESENT THAT WE, ALL OF THE UNDERSIGNED OWNERS OF ALL OF THE PROPERTY DESCRIBED IN THE SURVEYOR'S CERTIFICATE HEREON AND SHOWN ON THIS MAP, HAVE CAUSED THE SAME TO BE SUBDIVIDED INTO LOTS, BLOCKS, STREETS AND EASEMENTS AND DO HEREBY DEDICATE ANY PUBLIC STREETS AND OTHER PUBLIC AREAS AS INDICATED HEREON FOR PERPETUAL USE OF THE PUBLIC. PURSUANT TO UTAH CODE 10-9A-604(D) THE OWNER HEREBY CONVEYS THE COMMON AREA, AS INDICATED HEREON, TO THE LAKEFRONT TOWNHOMES ASSOCIATION, A UTAH NONPROFIT CORPORATION, WITH A REGISTERED ADDRESS OF 12227 BUSINESS PARK DR., SUITE 200 DRAPER, UT. 84020

IN WITNESS WHEREOF WE HAVE HEREUNTO SET OUR HANDS THIS _____ DAY OF _____
A.D. 20___

EDGE VINEYARD SHORES, LLC

BY:STEVE MADDOX
ITS:MANAGER

ACCEPTANCE BY LEGISLATIVE BODY

THE LEGISLATIVE BODY OF VINEYARD CITY OF UTAH COUNTY, APPROVES THIS SUBDIVISION AND HEREBY ACCEPTS THE DEDICATION OF ALL STREETS, EASEMENTS, AND OTHER PARCELS OF LAND INTENDED FOR PUBLIC PURPOSES FOR THE PERPETUAL USE OF THE PUBLIC THIS ____ DAY OF _____ 20___.

VINEYARD PLANNING COMMISSION CHAIR DATE: ____/____/_____	CITY ENGINEER DATE: ____/____/_____
CITY MANAGER DATE: ____/____/_____	CLERK/RECORDER DATE: ____/____/_____
CITY ATTORNEY DATE: ____/____/_____	

PHASE 1F
LAKEFRONT
@ VINEYARD TOWN CENTER
SUBDIVISION
(AMENDING PORTIONS OF LOT 3 & LOT 4, GENEVA PARK WEST SUBDIVISION)
PORTIONS OF SECTION 7, T6S, R2E,
SALT LAKE BASE & MERIDIAN
VINEYARD CITY, UTAH COUNTY, UTAH

1 OF 2	7/9/2020	SCALE: 1" = 50'

PREPARED FOR
EDGE HOMES
13702 SOUTH 200 WEST, SUITE B12
DRAPER, UTAH 84020
PH: 801-494-0150

FOCUS©
ENGINEERING AND SURVEYING, LLC
6949 SOUTH HIGH TECH DRIVE SUITE 200
MIDVALE, UT 84047 PH: (801) 352-0075
www.focusutah.com

SURVEYOR'S SEAL	CLERK RECORDER SEAL	COUNTY RECORDER

Z:_2020\20-0169 Lakefront at Vineyard Town Center South Redesign\design\20-0169\dwg\sheets\FINAL PLATS\PHASE 1F\C2.0 Final Plat Phase 1F.dwg

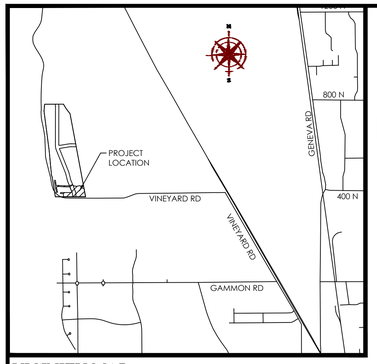

VICINITY MAP
N.T.S

LEGEND

- BOUNDARY
- SECTION LINE
- EASEMENT
- RIGHT-OF-WAY LINE
- BUILDING SETBACK
- EXISTING PROPERTY LINE
- LIMITS OF PRIVATE OWNERSHIP

PHASE 1F
LAKEFRONT @ VINEYARD TOWN CENTER
SUBDIVISION
(AMENDING PORTIONS OF LOT 3 AND LOT 4, GENEVA PARK WEST SUBDIVISION)
LOCATED IN THE SE1/4 OF SECTION 7, T6S, R2E,
SALT LAKE BASE & MERIDIAN
VINEYARD CITY, UTAH COUNTY, UTAH

GRAPHIC SCALE

20 0 10 20 40 80

(IN FEET)
1 inch = 20 ft.

NOTES

1. #5 X 24" REBAR & CAP (FOCUS ENG) TO BE SET AT ALL LOT CORNERS. NAILS OR PLUGS TO BE SET IN TOP BACK OF CURB AT EXTENSION OF SIDE LOT LINES, IN LIEU OF REBAR AND CAPS AT FRONT LOT CORNERS.
2. ALL PUBLIC UTILITY EASEMENTS PLATTED HEREON ARE IN PERPETUITY FOR INSTALLATION, MAINTENANCE, REPAIR AND REPLACEMENT OF PUBLIC UTILITIES, SIDEWALKS AND APPURTENANT PARTS THEREOF AND THE RIGHT TO REASONABLE ACCESS TO GRANTOR'S PROPERTY FOR THE ABOVE DESCRIBED PURPOSES. THE EASEMENT SHALL RUN WITH THE REAL PROPERTY AND SHALL BE BINDING UPON THE GRANTOR AND THE GRANTOR'S SUCCESSORS, HEIRS, AND ASSIGNS.
3. ALL COMMON AREAS AND STREETS OR DRIVES TO SERVE AS PUBLIC UTILITY EASEMENTS.
4. ALL BUILDING WALLS ARE PARALLEL AND PERPENDICULAR TO REFERENCE BEARING SHOWN ON BUILDING.
5. ALL AREAS ARE COMMON AREAS AND FACILITIES EXCEPT AS OTHERWISE SPECIFICALLY DESIGNATED.

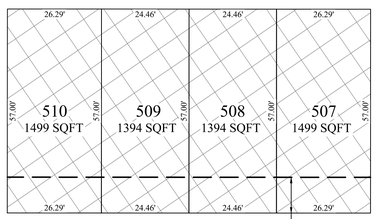

FOURPLEX TOWNHOMES

10' REAR BLDG. SETBACK (TYP.)

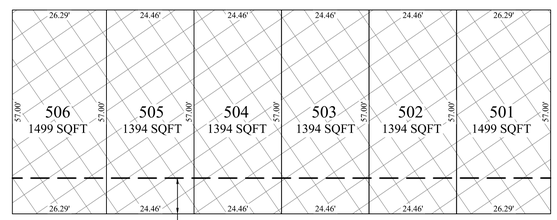

10' REAR BLDG. SETBACK (TYP.)

FOURPLEX TOWNHOMES

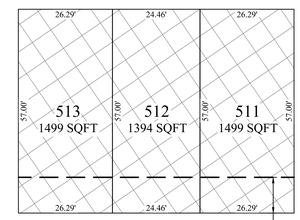

FOURPLEX TOWNHOMES

10' REAR BLDG. SETBACK (TYP.)

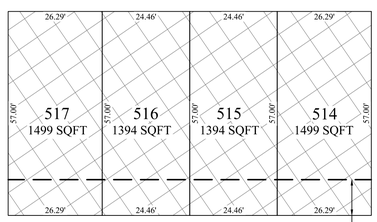

FOURPLEX TOWNHOMES

10' REAR BLDG. SETBACK (TYP.)

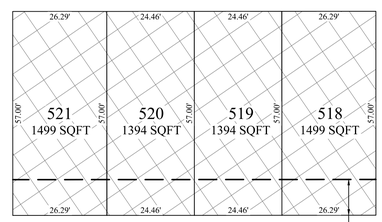

FOURPLEX TOWNHOMES

10' REAR BLDG. SETBACK (TYP.)

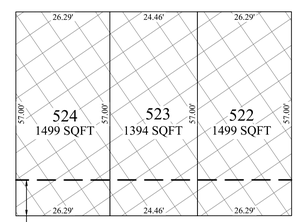

TRIPLEX TOWNHOMES

10' REAR BLDG. SETBACK (TYP.)

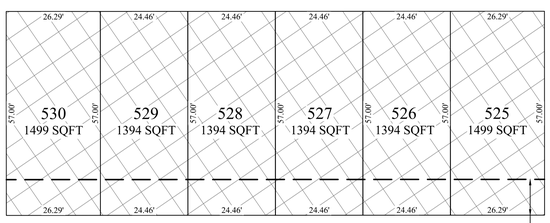

SIXPLEX TOWNHOMES

10' REAR BLDG. SETBACK (TYP.)

PHASE 1F
LAKEFRONT @ VINEYARD TOWN CENTER
SUBDIVISION
(AMENDING PORTIONS OF LOT 3 AND LOT 4, GENEVA PARK WEST SUBDIVISION)
LOCATED IN THE SE1/4 OF SECTION 7, T6S, R2E,
SALT LAKE BASE & MERIDIAN
VINEYARD CITY, UTAH COUNTY, UTAH

2 OF 2	7/9/2020	SCALE: 1" = 20'	SURVEYOR'S SEAL	CLERK PUBLIC SEAL

PREPARED FOR
EDGE HOMES
13702 SOUTH 200 WEST, SUITE B12
DRAPER, UTAH 84020
PH: 801-494-0150

FOCUS©
ENGINEERING AND SURVEYING, LLC
6949 SOUTH HIGH TECH DRIVE SUITE 200
MIDVALE, UT 84047 PH: (801) 352-0075
www.focusutah.com

Z:_2020\20-0169 Lakefront at Vineyard Town Center South Redesign\design 20-0169\dwg\sheets\FINAL PLATS\PHASE 1F\C2.1 Final Plat Phase 1F.dwg

Community Development

DATE: July 22, 2020
FROM: Elizabeth Hart, Senior Planner
TO: City Council
ITEM: 6.16 & 17 Hampton at Waters Edge Final Plat E and F
ADDRESS: Plat E: 150 N and 110 W; Plat F 220 W and 150 N
APPLICANT: Flagship Homes

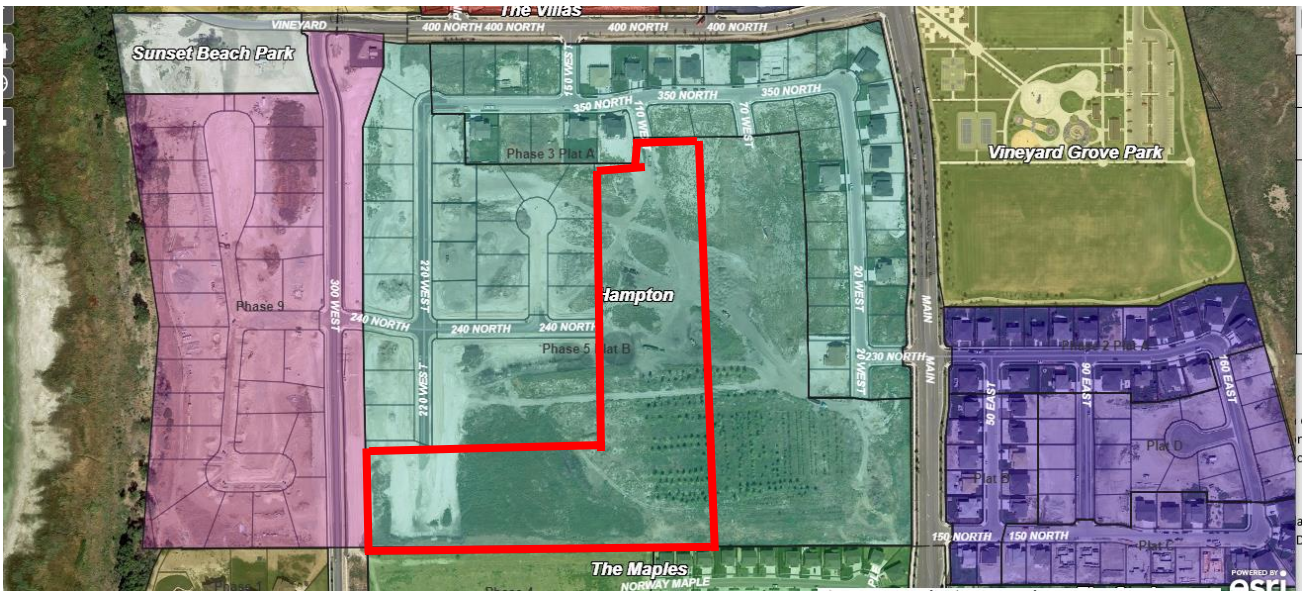

INTRODUCTION:
The applicant is requesting approval of two (2) final plats within the Waters Edge development. The applicant is proposing a total of thirty-four (34) single family lots on 14.16 acres. The development is within the Hamptons subdivision and is zoned WE SFD- 10,000 and WE SFD-15,000.

ANALYSIS:
The final plat includes 11.65 acres of developable land and includes thirty-five (35) single family lots.

CATEGORY	STANDARD	Plat E	Plat F
Minimum Lot Size	10,000 -15,000 sf.	Lot sizes range between 15,008 and 18,201 SF	Lot size range between 10,824 and 16,616 SF
Minimum Lot Width	85 - 90 ft.	Yes	Yes
Minimum Lot Width for Corner Lots	95-100 ft.	Yes	Yes
Min. Lot Width on a cul-de sac	80 ft.	NA	Yes

Minimum Lot Depth	100 ft.	Yes	Yes
Front Setback to Garage	20 ft.	The Setback and Easement Detail show the required setbacks for all lots.	
Front Setback to Living Space/Porch	20 ft.		
Minimum Rear Yard Setback	20 ft.		
Minimum Side Yard Setback	8 ft./ 18 ft. total side yard		
Minimum Side Yard Setback for Corner Lots	20 ft.		

FINDINGS:

Engineering Department Comments

Staff has added a condition of approval that states that the applicant shall make any redline corrections from the engineering department before recording the plat.

Community Development Department Comments

The community development found the proposed plat to meet the approved preliminary plat and the regulations set forth within the Waters Edge Zoning District.

RECOMMENDATION:

Staff recommends the City Council approve the final plat subject to the following conditions:

1. The applicant makes any redline corrections from the engineering department prior to recording the plat.
2. The final plat be in conformance to the approved preliminary plat
3. The applicant is subject to all federal, state, and local laws.

ATTACHMENTS:

Final Plat Application
Proposed Final Plat

Hampton E

VINEYARD
STAY CONNECTED

FINAL SUBDIVISION APPLICATION

APPLICATION FEE: $1,940.00 +$6.20 per lot
$2076.40

APPLICATION DATE: 7/8/2020

APPLICANT(S): Flagship Homes - Becca Gifford

ADDRESS OF APPLICANT: 1250 E. 200 S. ste 1D Lehi UT 84043

BUSINESS PHONE #: 801-766-4442 **CELL PHONE #:** 385-315-1219

EMAIL ADDRESS: becca@forsail.com **FAX NUMBER:** 801-766-3337

CURRENT ZONING DISTICT DESIGNATION: Waters Edge zone

NUMBER OF PROPOSED NEW LOTS: 22

LOCATION/ADDRESS OF PROPOSED FINAL SUBDIVISION: ~150 N. + 110 W.

TOTAL ACREAGE OF PROPOSED FINAL SUBDIVISION: 8.83

NAME OF PROPERTY OWNER(S): Nate Hutchinson + Pete Evans

SIGNATURE OF APPLICANT(S):

Rebecca Gifford 7/8/2020
Applicant Signature Date

/ /
Applicant Signature Date

PROPERTY OWNER AFFIDAVIT

STATE OF UTAH }
}ss
COUNTY OF UTAH}

I, the undersigned, _____, as owner(s) of the property identified in the attached application, depose that the statements herein contained in this application and the information provided in the attached plans and exhibits are in all respects true and correct to the best of my knowledge.

MATT RASBAND
NOTARY PUBLIC·STATE OF UTAH
COMMISSION# 695504
COMM. EXP. 06-11-2021

_____
(Property Owner)

_____
(Property Owner)

Subscribed and sworn before me, _____, a Notary Public, on this _____ day of _____, 20_____.

_____
(Notary Public)

My commission expires: 6/11/21

AGENT AUTHORIZATION AFFIDAVIT

I, the undersigned, _____, as owner(s) of the real property described in the attached application, do authorize the following:
_____, as agent(s) and designated representative(s) regarding the attached application, to appear on my behalf before any administrative or legislative body in the Town of Vineyard considering this application, and to act in all respects as agent(s) in matters pertaining to the attached application.

MATT RASBAND
NOTARY PUBLIC·STATE OF UTAH
COMMISSION# 695504
COMM. EXP. 06-11-2021

_____
(Property Owner)

_____
(Property Owner)

Dated this _____day of _____, 20 _____, personally appeared before me,
_____, the signer(s) of the agent authorization who duly acknowledged to me that they executed the same.

_____
(Notary Public)

My commission expires: 6/11/21

FINAL SUBDIVISION APPLICATION REQUIREMENTS:

1. **Application Form.** A Final Subdivision Application form completed and signed by the owner(s) of the Subject Property, as identified on the property assessment rolls of Utah County, or authorized agent of the owner(s), of the lands proposed to be subdivided. If the Application form is signed by an agent of the owner(s), the Application form shall be accompanied by an affidavit identifying the agent as being duly authorized to represent the owner(s) in all matters related to the Final Subdivision Application. All persons with a fee interest in the Subject Property shall be required to join in and sign the Final Subdivision Application.

2. **Final Subdivision Application Fees.** The Final Subdivision Application shall include the payment of all Preliminary Subdivision Application fees, as established by the Council, and required by Section 303 herein.

3. **Legal Description.** A complete and accurate legal description of the entire Subject Property proposed to be subdivided.

4. **Final Subdivision Plat.** A Final Subdivision Plat shall be prepared by a licensed land surveyor or engineer, as required by the Act, and drawn at a scale of not less than one-inch equals one hundred feet (1" = 100'), or as recommended by the Engineer. The Final Subdivision Plat shall be prepared in pen and all sheets shall be numbered. The following shall be included and accompany the Final Subdivision Application form:

   _____ **A digital copy of the Final Plat**. Thumb Drive or emailed PDF format is preferred. Other methods may be considered if necessary.

   The Final Subdivision Plat shall show the following:

   a. A vicinity map, at a minimum scale of one inch equals one thousand feet (1" = 1000'), clearly identifying the boundaries of the entire Subject Property, accesses, adjoining subdivision outlines and names, as applicable, and other relevant information within one-half (½) mile of the boundary of the Subject Property. The location of the Subject Property with respect to surrounding property and roads, and the names of all adjoining property owners of record shall be shown.

   b. A map of the boundary of the Subject Property, accurate in scale, dimension and bearing, and giving the location of and ties to the nearest survey monument. The map shall have an error of closure of not greater than 1:3,000. Survey tie to the State grid or other permanent marker established by the Utah County surveyor is required, if practical.

   c. Located at the top-center and lower right-hand corner of the Preliminary Plat, the proposed name of the subdivision that is distinct from any other plat already recorded in the Utah County Recorder's Office. The basis of bearings used, graphic and written scale, true north point, township, range, section, quarter section, block, lot number, and total area of the Subject Property shall be shown.

   d. Proposed lot and street layout. All existing and proposed street names shall be shown.

e. The lot or unit reference, block or building reference, street or site address, the street name or coordinate address, boundaries, course, dimensions, acreage or square footage for all parcels, units or lots, and length and width of the blocks and lots proposed to be created. All parcels, units, lots, or blocks created shall be numbered consecutively.

f. The boundaries, course, and dimensions of all of the parcels of ground divided by their boundaries, course, and extent. This is whether the owner proposes that any parcel of ground is intended to be used as a street or for any other public use, and whether any such area is reserved or proposed for dedication for a public purpose.

g. The location of any common space or open space areas, including the location of all property proposed to be set aside for public or private reservation, with the designation of the purpose of such set asides and conditions, if any, of the dedication or reservation.

h. All existing and proposed right-of-way and easement grants of record for underground utility facilities, as defined by Section 54-8a-2 of the Code, and for all other utility facilities within the proposed rights-of-way.

i. Each proposed lot shall identify required setback lines identifying the required front, side, and rear yard areas, as required by the Zoning District in which the Subject Property is located.

j. A title block placed on the lower right-hand corner of the Plat showing:

   (i) Proposed name or designation of the subdivision that is distinct from any other plat already recorded in the Office of the Utah County Recorder;

   (ii) Name and address of the owner of record and the name, address and license number of the licensed surveyor or engineer responsible for preparing the Preliminary Plat;

   (iii) Date of preparation of the Preliminary Plat, and all revision dates, as applicable; and

   (iv) Signature blocks for the dated signatures of the Planning Commission Chair, City Manager, and Town Engineer.

5. **Required Subject Property Information.** The following information is required and shall be provided on separate sheets at the same scale as the Final Subdivision Plat:

   a. The identification of known natural features including, but not limited to, jurisdictional wetlands as identified by the United States Army Corps of Engineers, flood plains and flood channels as identified by a Federal or State Agency, all water courses, areas where ground water is located within three (3) feet of the ground surface, water bodies, marshy or swampy areas, drainage ways, and any other natural features as required by the City Planner or City Engineer for the Subject Property, including the total area of each.

b. All trees over six (6) inches in diameter, measured four (4) feet above the ground. In cases of heavily wooded areas, indication of the outline of wooded area and location of trees which are to remain.

c. Existing site contours, at intervals of no greater than two (2) feet, overlaid with the proposed subdivision layout. Elevations shall be based on national Geodetic Survey sea level data. In cases of predominately-level topography, one (1) foot interval contours may be required.

d. The location of any known man-made features on, or contiguous to the Subject Property, including existing platted lots, all utility easements, railroads, power lines and power poles, telephone and other telecommunication lines and facilities, bridges, culverts, drainage channels, road rights-of-way and easements, field drains, and well or spring protection areas. Indicate which features will remain and which will be removed.

e. The location and dimensions of all existing buildings, fence lines and property lines, overlaid with the proposed subdivision layout.

f. The layout of existing power lines, including the source and connection to the existing power supply.

g. All existing and proposed roadway locations and dimensions, with cross sections and profiles of all new streets and roads proposed to be dedicated to the Town. This shall show the grades of all proposed streets and roads, including direction of slope and all proposed cuts and fills exceeding three (3) feet. The proposed radius of all centerline curves shall be shown.

h. The location and size of existing and proposed culinary water and sanitary sewer lines, the location of all wells and springs, if any, and the location of all secondary water locations as required by the Town Engineer. As applicable, this shall be overlaid with the proposed subdivision layout plan. Indicate the direction of slope for all gravity pipelines.

i. Proposed storm drainage and flood control systems, including proposed pipe sizes, inlets, detention areas, and drainage arrows.

j. The location of all existing and proposed curb, gutter and sidewalk within and adjacent to the proposed development, with an indication of grades and flow arrows showing direction of storm water surface flows.

k. Existing land drain locations and proposed new land drainage system, including proposed pipe sizes, inlets, outlets, and drainage arrows.

l. The location of all existing and proposed fire hydrants, including the sizes of all existing and proposed water lines serving all fire hydrants.

m. The location of all existing and proposed streetlights. A photometric plan and power plan must be provided.

n. The location of all existing and proposed street trees and other landscape plantings.

6. **Geotechnical Report.** A report providing geologic maps, soil type maps, and tables of soil type interpretations based on the national Cooperative Soils Survey, United States Department of Agriculture, and Soil Conservation Service. Other investigation reports regarding the suitability of the Subject Property for the proposed subdivision shall be provided. The location and height of all subsurface ground water areas shall be shown.

7. **Final Grading and Drainage Plan.** For all Subject Property of one (1) acre or larger, a preliminary grading plan shall be provided and indicated by solid-line contours using two (2) foot intervals, and imposed on dashed-line contours also using two (2) foot) intervals, of the existing topography for the entire Subject Property. For Subject Properties that have predominately-level topography, one (1) foot contour intervals may be required by the Town Engineer.

8. **Final Erosion Control Plan.** When required by the City Engineer, a Final Erosion Control Plan shall be provided and included with the Preliminary Subdivision Application.

9. **Final Easement Plan.** A Final Easement plan, identifying the location, size, and use of all existing and proposed easements. If there are cross-access easements between multiple project properties, it is the obligation of the applicant to facilitate cross-access easement agreements between the affected parties.

10. **Title Report.** A Title Report for the Subject Property, provided by a Title Company and no older than thirty (30) calendar days from the date of the filing of the Final Subdivision Application.

11. **Tax Clearance.** A tax clearance from the Utah County Treasurer shall be provided as part of the Preliminary Subdivision Application.

12. **Evidence of Availability of Necessary Services.** The following information is required to be presented and is necessary to establish the availability of required services to the Subject Property.

    a. Culinary Water Requirements. As required and provided by the Act, the Vineyard City Engineer is hereby designated as the Culinary Water Authority for the City. It shall be the responsibility of the Applicant to provide all information and materials, as required by the City Engineer, necessary to review and provide a written approval of the feasibility of the proposed culinary water system and culinary water sources.

    b. Sanitary Sewer Requirements. As required and provided by the Act, the Vineyard City Engineer is hereby designated as the Sanitary Sewer Authority for the City. It shall be the responsibility of the Applicant to provide information and materials, as required by the City Engineer, necessary to review and provide a written approval of the feasibility of the proposed sanitary sewer system.

    c. Subdivision Roads and Streets. The Preliminary Subdivision Application shall identify the proposed road and street layout. Proposed subdivision streets shall make provision for the continuation of existing streets. All subdivision streets shall be designed as required by the Vineyard City Development Standards and Design Specifications. If the proposed subdivision will be accessed directly from a State Highway, an appropriate access permit

approval, as required by the State of Utah Department of Transportation, shall be provided with the application materials. If the subdivision will be accessed directly from a County Road, authorization from Utah County to allow subdivision access from a County Road shall be provided with the application materials. It shall be the responsibility of the Applicant to provide information and materials, as required by the City Engineer, necessary to review, and to provide a written recommendation of the proposed road and street system.

d. Storm Drainage and Flood Control Facilities. The Final Subdivision Application shall identify the storm drainage and flood control system. The proposed subdivision storm drainage and flood control system shall make provision for the continuation of existing facilities. All subdivision storm drainage and flood control system facilities shall be designed as required by the Vineyard City Development Standards and Design Specifications. It shall be the responsibility of the Applicant to provide information and materials, as required by the City Engineer, necessary to review, and to provide a written recommendation of the proposed storm drainage and flood control system.

e. Fire Protection, Suppression, and Access Facilities. The Final Subdivision Application shall identify the proposed fire protection, fire suppression, and fire access facilities and shall make provisions for the continuation of existing facilities, as required by the Planning Commission and Council. All subdivision fire protection, fire suppression, and fire access facilities shall be designed as required by the Vineyard City Development Standards and Design Specifications. The Vineyard City Fire Marshall is hereby designated as the Fire Protection Authority, and shall review all proposed fire protection, fire suppression, and fire access facilities. It shall be the responsibility of the Applicant to provide information and materials, as required by the City Fire Marshall, necessary to review, and to provide a written approval of the feasibility of the proposed fire protection, suppression, and access facilities.

FINAL SUBDIVISION APPLICATION REVIEW PROCEDURES

Following a Pre-Application meeting, a Final Subdivision Application is filed with the City Planner. The City Planner determines application completeness. *(See Figure 1)*

↓

Review comments from the City Planner are forwarded to the City Council in the form of a Staff Report.

↓

The Final Application is added to the Agenda to be considered by the City Council

↓

The City Council considers the Final Subdivision Application. The City Council shall either *Approve*, *Approve with Requirements*, or *Deny* the Final Subdivision Application.

FIGURE 1
DETERMINATION OF APPLICATION COMPLETENESS PROCEDURES

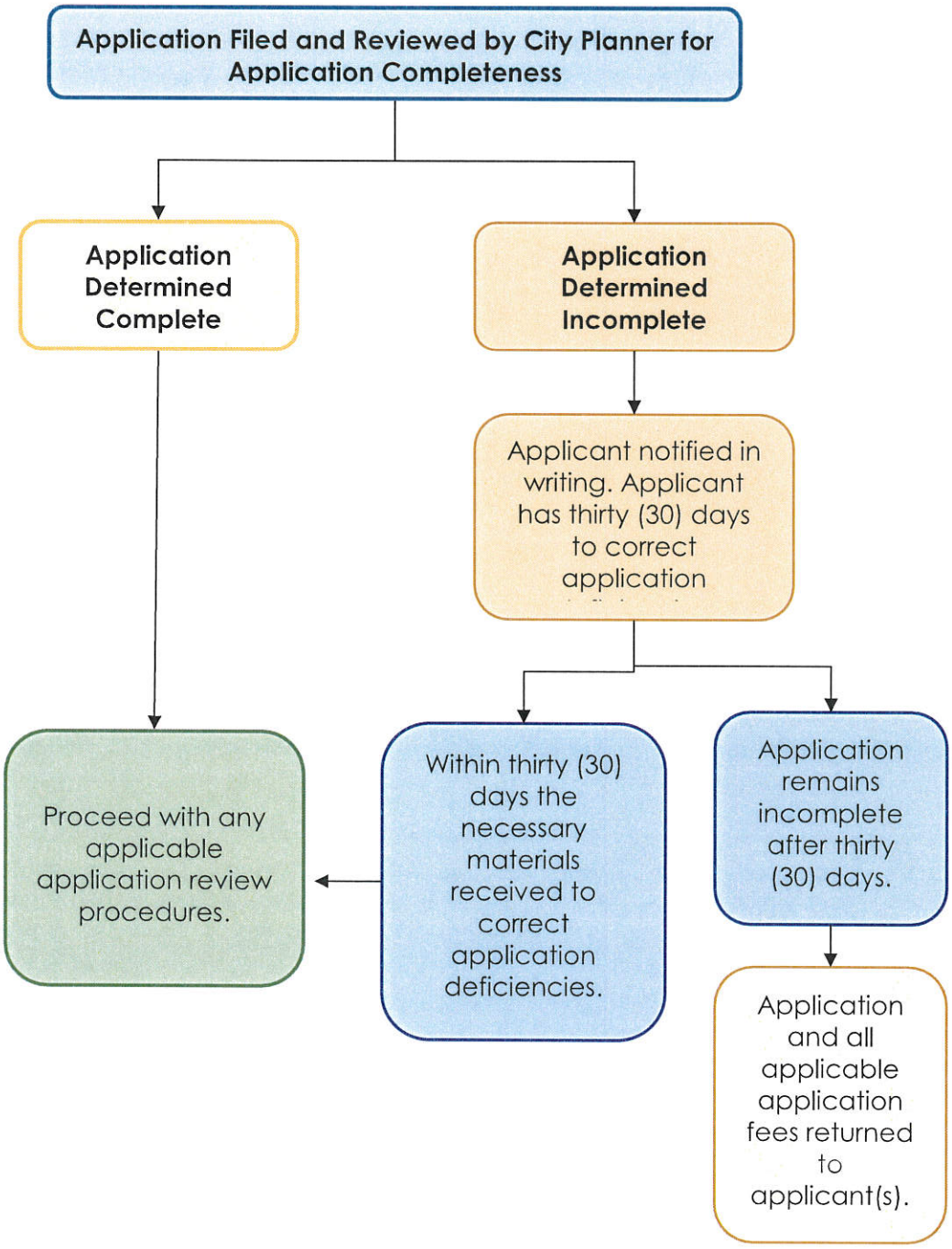

HAMPTON AT WATERS EDGE PLAT 'E'

LOCATED IN THE NORTHEAST QUARTER OF
SECTION 18, TOWNSHIP 6 SOUTH, RANGE 2 EAST,
SALT LAKE BASE AND MERIDIAN

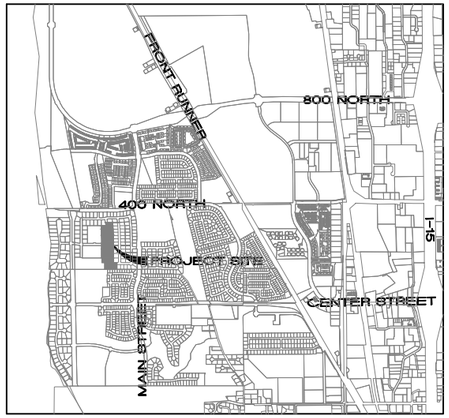

VICINITY MAP

NTS

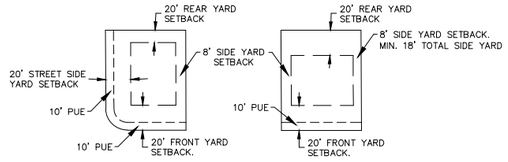

ZONE SFD 10,000 – 15,000
SETBACK AND EASEMENT DETAIL

ROCKY MOUNTAIN POWER

1. PURSUANT TO UTAH CODE ANN. 54-3-27 THIS PLAT CONVEYS TO THE OWNER(S) OR OPERATORS OF UTILITY FACILITIES A PUBLIC UTILITY EASEMENT ALONG WITH ALL THE RIGHTS AND DUTIES DESCRIBED THEREIN.
2. PURSUANT TO UTAH CODE ANN. 17-27A603(4)C(II) ROCKY MOUNTAIN POWER ACCEPTS DELIVERY OF THE PUE AS DESCRIBED IN THIS PLAT SOLELY FOR THE PURPOSE OF CONFIRMING THAT THE PLAT CONTAINS PUBLIC UTILITY EASEMENTS AND APPROXIMATES THE LOCATION OF THE PUBLIC UTILITY EASEMENTS, BUT DOES NOT WARRANT THEIR PRECISE LOCATION. ROCKY MOUNTAIN POWER MAY REQUIRE OTHER EASEMENTS IN ORDER TO SERVE THIS DEVELOPMENT. THIS APPROVAL DOES NOT AFFECT ANY RIGHT THAT ROCKY MOUNTAIN POWER HAS UNDER:
   a. A RECORDED EASEMENT OR RIGHT-OF-WAY
   b. THE LAW APPLICABLE TO PRESCRIPTIVE RIGHTS
   c. TITLE 54, CHAPTER 8A, DAMAGE TO UNDERGROUND FACILITIES
   d. ANY OTHER PROVISION OF LAW

QUESTAR GAS COMPANY

QUESTAR APPROVES THIS PLAT SOLELY FOR THE PURPOSE OF CONFIRMING THAT THE PLAT CONTAINS PUBLIC UTILITY EASEMENTS. QUESTAR MAY REQUIRE OTHER EASEMENTS IN ORDER TO SERVE THIS DEVELOPMENT. THIS APPROVAL DOES NOT CONSTITUTE ABROGATION OR WAIVER OF ANY OTHER EXISTING RIGHTS, OBLIGATIONS OR LIABILITIES PROVIDE BY LAW OR EQUITY. THIS APPROVAL DOES NOT CONSTITUTE ACCEPTANCE, APPROVAL OR ACKNOWLEDGEMENT OF ANY TERMS CONTAINED IN THE PLAT, INCLUDING THOSE SET FORTH IN THE OWNERS DEDICATION AND THE NOTES AND DOES NOT CONSTITUTE A GUARANTEE OF PARTICULAR TERMS OF NATURAL GAS SERVICE. FOR FURTHER INFORMATION PLEASE CONTACT QUESTAR'S RIGHT-OF-WAY DEPARTMENTS AT 800-366-6532.

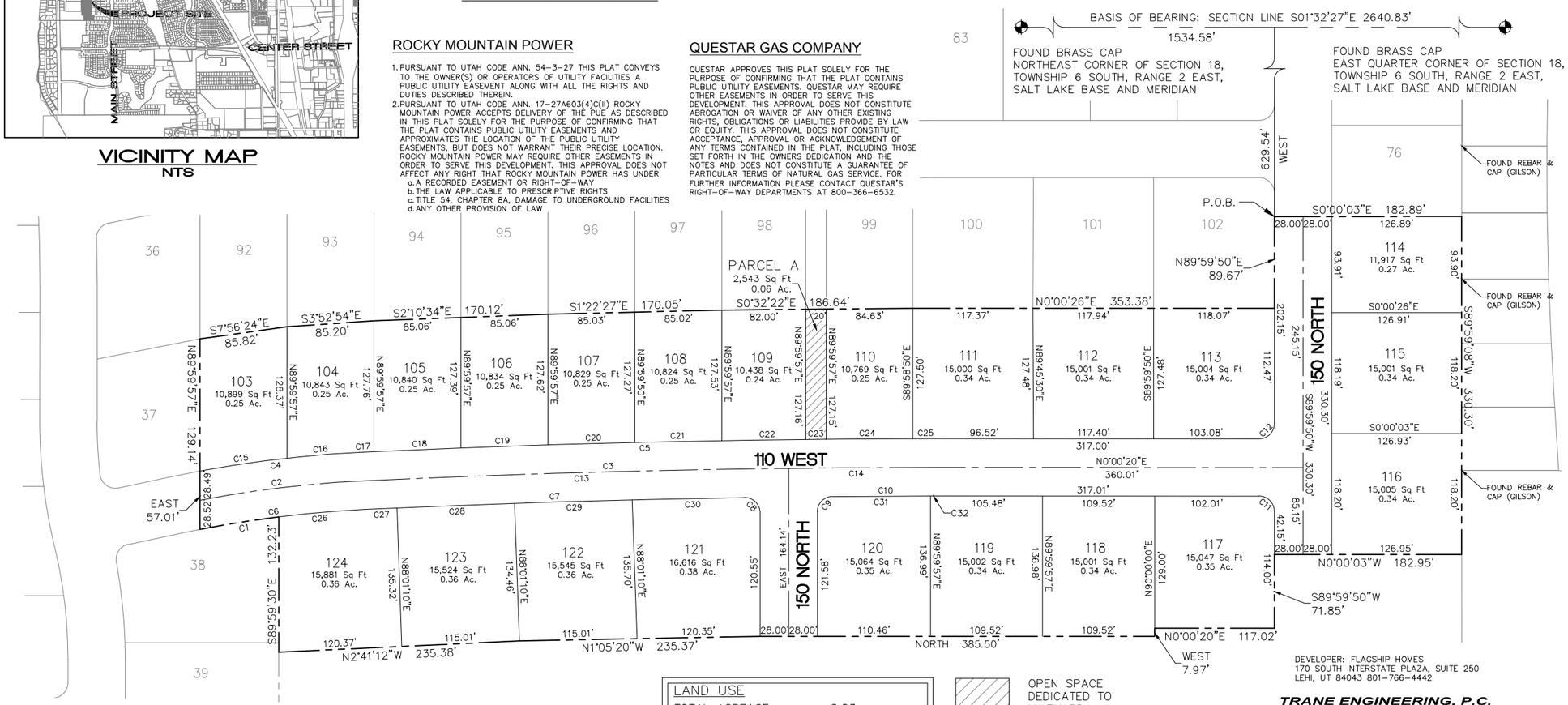

DEVELOPER: FLAGSHIP HOMES
170 SOUTH INTERSTATE PLAZA, SUITE 250
LEHI, UT 84043 801-766-4442

TRANE ENGINEERING, P.C.
CONSULTING ENGINEERS AND LAND SURVEYORS
27 EAST MAIN LEHI, UTAH 84043 (801) 768-4544

SCALE: 1" = 60'

LAND USE	
TOTAL ACREAGE:	8.83 acres
TOTAL OPEN SPACE:	0.06 acres
TOTAL LOTS:	22
NO. LOTS / ACRE:	2.49
ZONING:	SDF-10,000 SDF-15,000

OPEN SPACE DEDICATED TO VINEYARD

CURVE TABLE					
CURVE	LENGTH	RADIUS	DELTA	CHORD	CHORD BEARING
C1	78.08	1116.00	4°00'31"	78.06	N9°04'40"W
C2	162.20	1144.00	8°07'26"	162.07	N6°44'45"W
C3	557.27	11872.17	2°41'22"	557.22	N1°20'21"W
C4	160.83	1172.00	7°51'45"	160.71	N6°36'54"W
C5	558.58	11900.17	2°41'22"	558.53	N1°20'21"W
C6	163.58	1116.00	8°23'54"	163.44	N6°52'59"W
C7	370.21	11844.17	1°47'27"	370.20	S1°47'18"E
C8	23.80	15.00	90°53'35"	21.38	N44°33'13"E
C9	23.44	15.00	89°31'25"	21.12	N45°14'17"W
C10	99.63	11844.17	0°28'55"	99.63	N0°14'07"W
C11	23.56	15.00	89°59'30"	21.21	N45°00'05"E
C12	23.56	15.00	90°00'30"	21.21	S44°59'55"E
C13	414.76	11872.17	2°00'06"	414.74	N1°40'59"W
C14	142.51	11872.17	0°41'16"	142.51	N0°20'18"W
C15	85.95	1172.00	4°12'07"	85.93	N8°26'44"W
C16	74.88	1172.00	3°39'39"	74.87	N4°30'51"W

CURVE TABLE					
CURVE	LENGTH	RADIUS	DELTA	CHORD	CHORD BEARING
C17	10.38	11900.17	0°03'00"	10.38	N2°39'32"W
C18	85.08	11900.17	0°24'35"	85.08	N2°25'45"W
C19	85.05	11900.17	0°24'34"	85.05	N2°01'10"W
C20	85.04	11900.17	0°24'34"	85.04	N1°36'36"W
C21	85.01	11900.17	0°24'33"	85.01	N1°12'02"W
C22	82.01	11900.17	0°23'41"	82.01	N0°47'55"W
C23	20.00	11900.17	0°05'47"	20.00	N0°33'11"W
C24	84.59	11900.17	0°24'26"	84.59	N0°18'04"W
C25	21.43	11900.17	0°06'11"	21.43	N0°02'46"W
C26	85.50	1116.00	4°23'23"	85.48	N4°52'43"W
C27	30.40	11844.17	0°08'49"	30.40	N2°36'37"W
C28	115.00	11844.17	0°33'23"	115.00	N2°15'31"W
C29	115.00	11844.17	0°33'23"	115.00	N1°42'08"W
C30	109.81	11844.17	0°31'52"	109.81	N1°09'31"W
C31	95.59	11844.17	0°27'45"	95.59	N0°14'43"W
C32	4.04	11844.17	0°01'10"	4.04	N0°00'15"W

NOTES

1. PLAT MUST BE RECORDED WITHIN 12 MONTHS OF FINAL PLAT APPROVAL, OR FOR PHASED DEVELOPMENTS, WITHIN 24 MONTHS OF RECORDATION OF MOST RECENT PHASE. THE FIRST FINAL PLAT APPROVAL WAS GRANTED ON THE DAY OF , 20 .
2. THE INSTALLATION OF IMPROVEMENTS SHALL CONFORM TO ALL CITY STANDARDS, REGULATIONS, AND ORDINANCES.
3. BUILDING PERMITS WILL NOT BE ISSUED UNTIL ALL IMPROVEMENTS HAVE BEEN INSTALLED AND ACCEPTED BY THE CITY IN WRITING OR BONDED FOR.
4. NO BUILDING PERMITS SHALL BE ISSUED UNTIL ALL IMPACT AND CONNECTION FEES ARE PAID IN FULL PER CITY REGULATIONS IN EFFECT AT THE TIME OF BUILDING PERMIT ISSUANCE.
5. DRIVEWAYS AND LOT ACCESS SHALL BE LIMITED TO INTERIOR LOCAL SUBDIVISION STREETS ONLY.
6. DRAINAGE SHALL NOT CROSS PROPERTY LINES. EXCESS OR CONCENTRATED DRAINAGE SHALL BE CONTAINED ON SITE OR DIRECTED TO AN APPROVED DRAINAGE FACILITY.
7. VINEYARD ACCEPTS NO RESPONSIBILITY FOR ANY PROPERTY DAMAGE CAUSED BY GROUND WATER FLOODING.
8. ALL BUILDING AND DEVELOPMENT SHALL BE IN CONFORMANCE WITH THE VINEYARD ZONING ORDINANCE.
9. PROPERTY OWNERS SHOULD BE AWARE THAT THIS AREA IS LOCATED IN THE VICINITY OF A RAILROAD SYSTEM.
10. ALL ROADWAYS DEDICATED TO VINEYARD CITY.
11. 5' SIDE YARD SETBACK MUST REMAIN CLEAR FOR ACCESS.

ACCEPTANCE BY LEGISLATIVE BODY

THE LEGISLATIVE BODY OF VINEYARD CITY OF UTAH COUNTY, APPROVES THIS SUBDIVISION AND HEREBY ACCEPTS THE DEDICATION OF ALL STREETS, EASEMENTS, AND OTHER PARCELS OF LAND INTENDED FOR PUBLIC PURPOSES FOR THE PERPETUAL USE OF THE PUBLIC THIS _____ DAY OF_____ 20 ____ .

VINEYARD PLANNING COMMISSION CHAIR DATE: ___/___/_____	VINEYARD ATTORNEY DATE: ___/___/_____
VINEYARD ENGINEER DATE: ___/___/_____	CITY MANAGER DATE: ___/___/_____
CLERK/RECORDER DATE: ___/___/_____	

SURVEYOR'S CERTIFICATE

I, TRAVIS TRANE, DO HEREBY CERTIFY THAT I AM A PROFESSIONAL LAND SURVEYOR AND THAT I HOLD LICENSE NO. 5152741, IN ACCORDANCE WITH TITLE 58, CHAPTER 22 OF THE PROFESSIONAL ENGINEERS AND LAND SURVEYORS LICENSING ACT, UTAH CODE ANNOTATED, 1953 AS AMENDED, I FURTHER CERTIFY THAT BY AUTHORITY OF THE OWNERS, A SURVEY WAS MADE UNDER MY DIRECTION OF THE TRACT OF LAND SHOWN AND DESCRIBED ON THIS DEDICATION PLAT, I CERTIFY THAT SAID SURVEY WAS COMPLETED IN ACCORDANCE WITH SECTION 17-23-17, UTAH CODE ANNOTATED, 1953 AS AMENDED, I FURTHER CERTIFY THAT I HAVE VERIFIED ALL MEASUREMENTS AND THAT MONUMENTS HAVE BEEN PLACED AS SHOWN ON THIS PLAT, I HEREBY STATE THAT THIS PLAT IS TRUE AND CORRECT TO THE BEST OF MY KNOWLEDGE, INFORMATION, BELIEF AND IN MY PROFESSIONAL OPINION.

_____ _____
(SURVEYOR), P.L.S. DATE

BOUNDARY DESCRIPTION

A parcel of land which is situate in the Northeast Quarter of Section 18, Township 6 South, Range 2 East, Salt Lake Base and Meridian, which parcel is described as follows:
Beginning at a point which is South 01°32'27" East 1,534.58 feet along the section line and West 629.54 feet from the Northeast Corner of Section 18, Township 6 South, Range 2 East, Salt Lake Base and Meridian: thence South 00°00'03" East 182.89 feet; thence South 89°59'08" West 330.30 feet; thence North 00°00'03" West 182.95 feet; thence South 89°59'50" West 71.85 feet; thence North 00°00'20" East 117.02 feet; thence West 7.97 feet; thence North 385.50 feet; thence North 01°05'20" West 235.37 feet; thence North 02°41'12" West 235.38 feet; thence South 89°59'30" East 132.23 feet; thence Northerly 78.08 feet along the arc of a non-tangent 1,116 foot radius curve to the left, through a central angel of 04°00'31", the cord of which bears North 09°04'40" West 78.06 feet; thence East 57.01 feet; thence North 89°59'57" East 129.14 feet; thence South 07°56'24" East 85.82 feet; thence South 03°52'54" East 85.20 feet; thence South 02°10'34" East 170.12 feet; thence South 01°22'27" East 170.05 feet; thence South 00°32'22" East 186.64 feet; thence South 00°00'26" West 353.38 feet; thence North 89°59'50" East 89.67 feet to the point of beginning.

8.83 acres more or less.

Basis of bearing: The line between the Northeast Corner and the East Quarter Corner of Section 18, Township 6 South, Range 2 East, Salt Lake and meridian which bears South 01°32'27" East.

OWNER'S DEDICATION

KNOW ALL MEN BY THESE PRESENTS THAT THE UNDERSIGNED ARE THE OWNER(S) OF THE ABOVE DESCRIBED TRACT OF LAND, AND HEREBY CAUSE THE SAME TO BE DIVIDED INTO LOTS, PARCELS AND STREETS, TOGETHER WITH EASEMENTS AS SET FORTH TO BE HEREAFTER KNOWN AS HAMPTON AT WATERS EDGE PLAT "E", AND DO HEREBY DEDICATE FOR THE PERPETUAL USE OF THE PUBLIC ALL ROADS AND OTHER AREAS SHOWN ON THIS PLAT AS INTENDED FOR PUBLIC USE. THE UNDERSIGNED OWNER(S) ALSO HEREBY CONVEY TO ANY AND ALL PUBLIC UTILITY COMPANIES A PERPETUAL, NON-EXCLUSIVE EASEMENT OVER THE PUBLIC UTILITY EASEMENTS SHOWN ON THIS PLAT, THE SAME TO BE USED FOR THE INSTALLATION, MAINTENANCE AND OPERATION OF UTILITY LINES AND FACILITIES.

IN WITNESS WHEREOF, WE HAVE HERE UNTO SET OUR HANDS THIS _____ DAY OF _____ A.D. 20 ____ .

SIGNATURE	PRINT NAME	TITLE & ENTITY
SIGNATURE	PRINT NAME	TITLE & ENTITY

ACKNOWLEDGEMENT

STATE OF UTAH }
COUNTY OF UTAH } S.S.
ON THIS THE _____ DAY OF _____ , A.D. 20 ____ ,
PERSONALLY APPEARED BEFORE ME,
_____,

WHO BEING DULY SWORN OR AFFIRMED, DID SAY THAT HE/SHE/THEY SIGNED THE OWNER'S DEDICATION FREELY AND VOLUNTARILY AND FOR THE PURPOSES THEREIN MENTIONED.

_____
NOTARY PUBLIC

_____
MY COMMISSION EXPIRES:

PLAT "E"

HAMPTON AT WATERS EDGE

A RESIDENTIAL SUBDIVISION

VINEYARD, UTAH COUNTY, UTAH
SCALE: 1"= 60 FEET

RECORDING INFORMATION		
SURVEYOR SEAL	NOTARY PUBLIC SEAL	CLERK-RECORDED SEAL

Hampton F

VINEYARD
STAY CONNECTED

FINAL SUBDIVISION APPLICATION

APPLICATION FEE: $1,940.00 +$6.20 per lot

APPLICATION DATE: 7/8/2020

APPLICANT(S): Flagship Homes - Becca Gifford

ADDRESS OF APPLICANT: 1250 E. 200 S. Ste 1D Lehi UT 84043

BUSINESS PHONE #: 801-766-4442 **CELL PHONE #:** 385-315-1214

EMAIL ADDRESS: becca@forsail.com **FAX NUMBER:** 801-766-3337

CURRENT ZONING DISTICT DESIGNATION: Waters Edge Zone

NUMBER OF PROPOSED NEW LOTS: 12

LOCATION/ADDRESS OF PROPOSED FINAL SUBDIVISION: ~220 W. + 150 N.

TOTAL ACREAGE OF PROPOSED FINAL SUBDIVISION: 5.33

NAME OF PROPERTY OWNER(S): Nate Hutchinson & Pete Evans

SIGNATURE OF APPLICANT(S):

Rebecca Gifford 7 / 8 / 2020

Applicant Signature Date

/ /

Applicant Signature Date

PROPERTY OWNER AFFIDAVIT

STATE OF UTAH }
}ss
COUNTY OF UTAH}

I, the undersigned, _____, as owner(s) of the property identified in the attached application, depose that the statements herein contained in this application and the information provided in the attached plans and exhibits are in all respects true and correct to the best of my knowledge.

MATT RASBAND
NOTARY PUBLIC · STATE OF UTAH
COMMISSION# 695504
COMM. EXP. 06-11-2021

_____
(Property Owner)

_____
(Property Owner)

Subscribed and sworn before me, _____, a Notary Public, on this _____ day of _____, 20_____.

_____
(Notary Public)

My commission expires: 6/11/21

AGENT AUTHORIZATION AFFIDAVIT

I, the undersigned, _____, as owner(s) of the real property described in the attached application, do authorize the following:
_____, as agent(s) and designated representative(s) regarding the attached application, to appear on my behalf before any administrative or legislative body in the Town of Vineyard considering this application, and to act in all respects as agent(s) in matters pertaining to the attached application.

MATT RASBAND
NOTARY PUBLIC · STATE OF UTAH
COMMISSION# 695504
COMM. EXP. 06-11-2021

_____
(Property Owner)

_____
(Property Owner)

Dated this _____day of _____, 20 _____, personally appeared before me,
_____, the signer(s) of the agent authorization who duly acknowledged to me that they executed the same.

_____
(Notary Public)

My commission expires: 6/11/21

FINAL SUBDIVISION APPLICATION REQUIREMENTS:

1. **Application Form.** A Final Subdivision Application form completed and signed by the owner(s) of the Subject Property, as identified on the property assessment rolls of Utah County, or authorized agent of the owner(s), of the lands proposed to be subdivided. If the Application form is signed by an agent of the owner(s), the Application form shall be accompanied by an affidavit identifying the agent as being duly authorized to represent the owner(s) in all matters related to the Final Subdivision Application. All persons with a fee interest in the Subject Property shall be required to join in and sign the Final Subdivision Application.

2. **Final Subdivision Application Fees.** The Final Subdivision Application shall include the payment of all Preliminary Subdivision Application fees, as established by the Council, and required by Section 303 herein.

3. **Legal Description.** A complete and accurate legal description of the entire Subject Property proposed to be subdivided.

4. **Final Subdivision Plat.** A Final Subdivision Plat shall be prepared by a licensed land surveyor or engineer, as required by the Act, and drawn at a scale of not less than one-inch equals one hundred feet (1" = 100'), or as recommended by the Engineer. The Final Subdivision Plat shall be prepared in pen and all sheets shall be numbered. The following shall be included and accompany the Final Subdivision Application form:

   _____ **A digital copy of the Final Plat**. Thumb Drive or emailed PDF format is preferred. Other methods may be considered if necessary.

   The Final Subdivision Plat shall show the following:

   a. A vicinity map, at a minimum scale of one inch equals one thousand feet (1" = 1000'), clearly identifying the boundaries of the entire Subject Property, accesses, adjoining subdivision outlines and names, as applicable, and other relevant information within one-half (½) mile of the boundary of the Subject Property. The location of the Subject Property with respect to surrounding property and roads, and the names of all adjoining property owners of record shall be shown.

   b. A map of the boundary of the Subject Property, accurate in scale, dimension and bearing, and giving the location of and ties to the nearest survey monument. The map shall have an error of closure of not greater than 1:3,000. Survey tie to the State grid or other permanent marker established by the Utah County surveyor is required, if practical.

   c. Located at the top-center and lower right-hand corner of the Preliminary Plat, the proposed name of the subdivision that is distinct from any other plat already recorded in the Utah County Recorder's Office. The basis of bearings used, graphic and written scale, true north point, township, range, section, quarter section, block, lot number, and total area of the Subject Property shall be shown.

   d. Proposed lot and street layout. All existing and proposed street names shall be shown.

e. The lot or unit reference, block or building reference, street or site address, the street name or coordinate address, boundaries, course, dimensions, acreage or square footage for all parcels, units or lots, and length and width of the blocks and lots proposed to be created. All parcels, units, lots, or blocks created shall be numbered consecutively.

f. The boundaries, course, and dimensions of all of the parcels of ground divided by their boundaries, course, and extent. This is whether the owner proposes that any parcel of ground is intended to be used as a street or for any other public use, and whether any such area is reserved or proposed for dedication for a public purpose.

g. The location of any common space or open space areas, including the location of all property proposed to be set aside for public or private reservation, with the designation of the purpose of such set asides and conditions, if any, of the dedication or reservation.

h. All existing and proposed right-of-way and easement grants of record for underground utility facilities, as defined by Section 54-8a-2 of the Code, and for all other utility facilities within the proposed rights-of-way.

i. Each proposed lot shall identify required setback lines identifying the required front, side, and rear yard areas, as required by the Zoning District in which the Subject Property is located.

j. A title block placed on the lower right-hand corner of the Plat showing:

   (i) Proposed name or designation of the subdivision that is distinct from any other plat already recorded in the Office of the Utah County Recorder;

   (ii) Name and address of the owner of record and the name, address and license number of the licensed surveyor or engineer responsible for preparing the Preliminary Plat;

   (iii) Date of preparation of the Preliminary Plat, and all revision dates, as applicable; and

   (iv) Signature blocks for the dated signatures of the Planning Commission Chair, City Manager, and Town Engineer.

5. **Required Subject Property Information.** The following information is required and shall be provided on separate sheets at the same scale as the Final Subdivision Plat:

   a. The identification of known natural features including, but not limited to, jurisdictional wetlands as identified by the United States Army Corps of Engineers, flood plains and flood channels as identified by a Federal or State Agency, all water courses, areas where ground water is located within three (3) feet of the ground surface, water bodies, marshy or swampy areas, drainage ways, and any other natural features as required by the City Planner or City Engineer for the Subject Property, including the total area of each.

b. All trees over six (6) inches in diameter, measured four (4) feet above the ground. In cases of heavily wooded areas, indication of the outline of wooded area and location of trees which are to remain.

c. Existing site contours, at intervals of no greater than two (2) feet, overlaid with the proposed subdivision layout. Elevations shall be based on national Geodetic Survey sea level data. In cases of predominately-level topography, one (1) foot interval contours may be required.

d. The location of any known man-made features on, or contiguous to the Subject Property, including existing platted lots, all utility easements, railroads, power lines and power poles, telephone and other telecommunication lines and facilities, bridges, culverts, drainage channels, road rights-of-way and easements, field drains, and well or spring protection areas. Indicate which features will remain and which will be removed.

e. The location and dimensions of all existing buildings, fence lines and property lines, overlaid with the proposed subdivision layout.

f. The layout of existing power lines, including the source and connection to the existing power supply.

g. All existing and proposed roadway locations and dimensions, with cross sections and profiles of all new streets and roads proposed to be dedicated to the Town. This shall show the grades of all proposed streets and roads, including direction of slope and all proposed cuts and fills exceeding three (3) feet. The proposed radius of all centerline curves shall be shown.

h. The location and size of existing and proposed culinary water and sanitary sewer lines, the location of all wells and springs, if any, and the location of all secondary water locations as required by the Town Engineer. As applicable, this shall be overlaid with the proposed subdivision layout plan. Indicate the direction of slope for all gravity pipelines.

i. Proposed storm drainage and flood control systems, including proposed pipe sizes, inlets, detention areas, and drainage arrows.

j. The location of all existing and proposed curb, gutter and sidewalk within and adjacent to the proposed development, with an indication of grades and flow arrows showing direction of storm water surface flows.

k. Existing land drain locations and proposed new land drainage system, including proposed pipe sizes, inlets, outlets, and drainage arrows.

l. The location of all existing and proposed fire hydrants, including the sizes of all existing and proposed water lines serving all fire hydrants.

m. The location of all existing and proposed streetlights. A photometric plan and power plan must be provided.

n. The location of all existing and proposed street trees and other landscape plantings.

6. **Geotechnical Report.** A report providing geologic maps, soil type maps, and tables of soil type interpretations based on the national Cooperative Soils Survey, United States Department of Agriculture, and Soil Conservation Service. Other investigation reports regarding the suitability of the Subject Property for the proposed subdivision shall be provided. The location and height of all subsurface ground water areas shall be shown.

7. **Final Grading and Drainage Plan.** For all Subject Property of one (1) acre or larger, a preliminary grading plan shall be provided and indicated by solid-line contours using two (2) foot intervals, and imposed on dashed-line contours also using two (2) foot) intervals, of the existing topography for the entire Subject Property. For Subject Properties that have predominately-level topography, one (1) foot contour intervals may be required by the Town Engineer.

8. **Final Erosion Control Plan.** When required by the City Engineer, a Final Erosion Control Plan shall be provided and included with the Preliminary Subdivision Application.

9. **Final Easement Plan.** A Final Easement plan, identifying the location, size, and use of all existing and proposed easements. If there are cross-access easements between multiple project properties, it is the obligation of the applicant to facilitate cross-access easement agreements between the affected parties.

10. **Title Report.** A Title Report for the Subject Property, provided by a Title Company and no older than thirty (30) calendar days from the date of the filing of the Final Subdivision Application.

11. **Tax Clearance.** A tax clearance from the Utah County Treasurer shall be provided as part of the Preliminary Subdivision Application.

12. **Evidence of Availability of Necessary Services.** The following information is required to be presented and is necessary to establish the availability of required services to the Subject Property.

    a. Culinary Water Requirements. As required and provided by the Act, the Vineyard City Engineer is hereby designated as the Culinary Water Authority for the City. It shall be the responsibility of the Applicant to provide all information and materials, as required by the City Engineer, necessary to review and provide a written approval of the feasibility of the proposed culinary water system and culinary water sources.

    b. Sanitary Sewer Requirements. As required and provided by the Act, the Vineyard City Engineer is hereby designated as the Sanitary Sewer Authority for the City. It shall be the responsibility of the Applicant to provide information and materials, as required by the City Engineer, necessary to review and provide a written approval of the feasibility of the proposed sanitary sewer system.

    c. Subdivision Roads and Streets. The Preliminary Subdivision Application shall identify the proposed road and street layout. Proposed subdivision streets shall make provision for the continuation of existing streets. All subdivision streets shall be designed as required by the Vineyard City Development Standards and Design Specifications. If the proposed subdivision will be accessed directly from a State Highway, an appropriate access permit

approval, as required by the State of Utah Department of Transportation, shall be provided with the application materials. If the subdivision will be accessed directly from a County Road, authorization from Utah County to allow subdivision access from a County Road shall be provided with the application materials. It shall be the responsibility of the Applicant to provide information and materials, as required by the City Engineer, necessary to review, and to provide a written recommendation of the proposed road and street system.

d. Storm Drainage and Flood Control Facilities. The Final Subdivision Application shall identify the storm drainage and flood control system. The proposed subdivision storm drainage and flood control system shall make provision for the continuation of existing facilities. All subdivision storm drainage and flood control system facilities shall be designed as required by the Vineyard City Development Standards and Design Specifications. It shall be the responsibility of the Applicant to provide information and materials, as required by the City Engineer, necessary to review, and to provide a written recommendation of the proposed storm drainage and flood control system.

e. Fire Protection, Suppression, and Access Facilities. The Final Subdivision Application shall identify the proposed fire protection, fire suppression, and fire access facilities and shall make provisions for the continuation of existing facilities, as required by the Planning Commission and Council. All subdivision fire protection, fire suppression, and fire access facilities shall be designed as required by the Vineyard City Development Standards and Design Specifications. The Vineyard City Fire Marshall is hereby designated as the Fire Protection Authority, and shall review all proposed fire protection, fire suppression, and fire access facilities. It shall be the responsibility of the Applicant to provide information and materials, as required by the City Fire Marshall, necessary to review, and to provide a written approval of the feasibility of the proposed fire protection, suppression, and access facilities.

FINAL SUBDIVISION APPLICATION REVIEW PROCEDURES

Following a Pre-Application meeting, a Final Subdivision Application is filed with the City Planner. The City Planner determines application completeness. *(See Figure 1)*

↓

Review comments from the City Planner are forwarded to the City Council in the form of a Staff Report.

↓

The Final Application is added to the Agenda to be considered by the City Council

↓

The City Council considers the Final Subdivision Application. The City Council shall either *Approve*, *Approve with Requirements*, or *Deny* the Final Subdivision Application.

FIGURE 1
DETERMINATION OF APPLICATION COMPLETENESS PROCEDURES

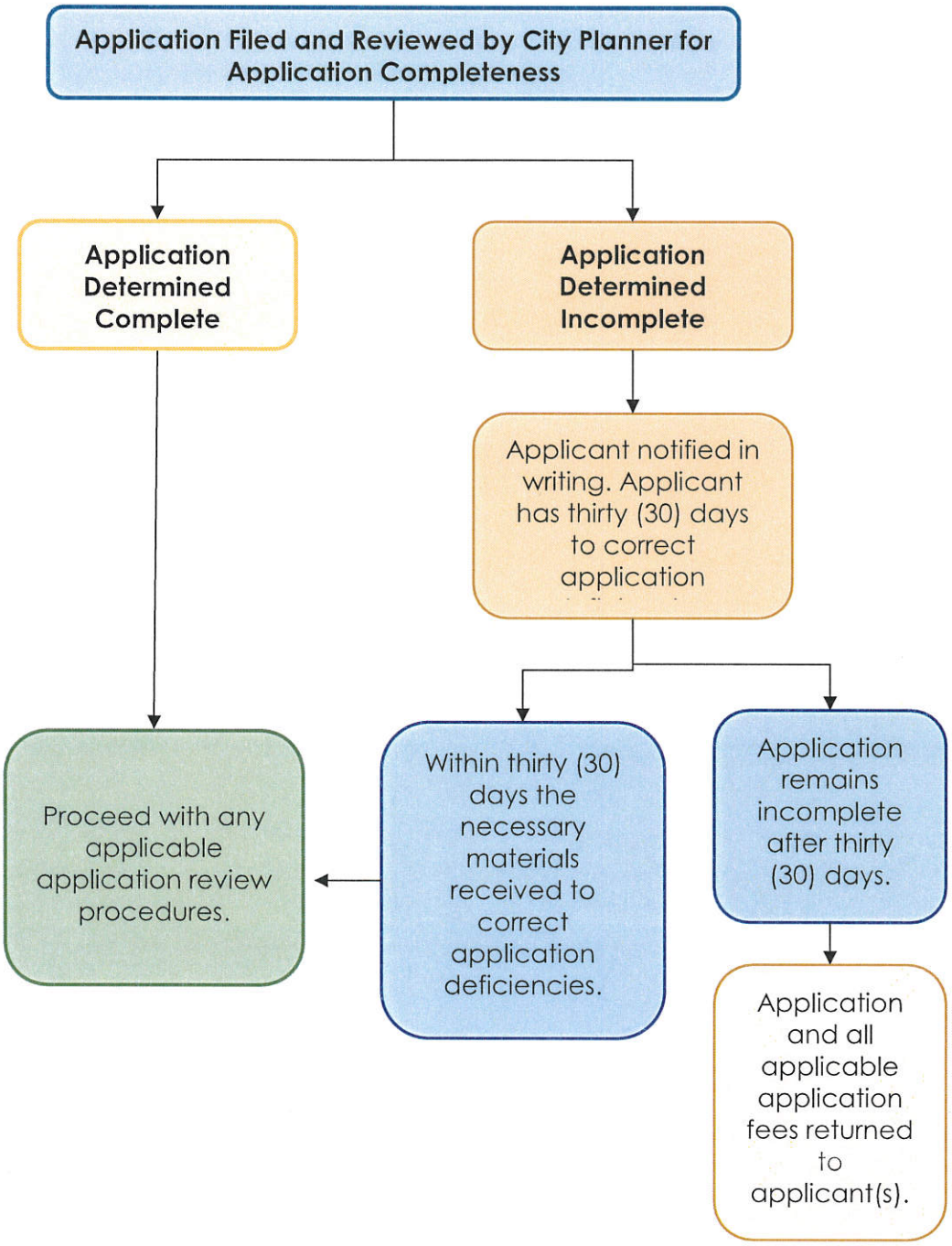

HAMPTON AT WATERS EDGE PLAT 'F'

LOCATED IN THE NORTHEAST QUARTER OF
SECTION 18, TOWNSHIP 6 SOUTH, RANGE 2 EAST,
SALT LAKE BASE AND MERIDIAN

LAND USE	
TOTAL ACREAGE:	5.33 acres
TOTAL LOTS:	12
NO. LOTS / ACRE:	2.25
ZONING:	SDF-15,000

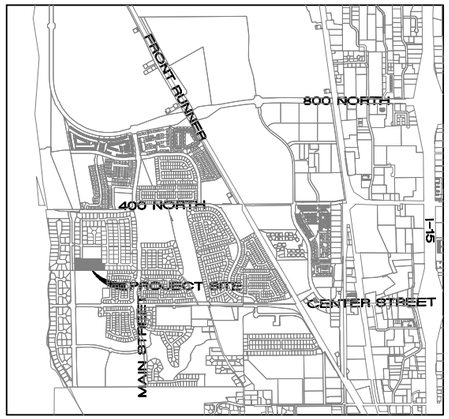

VICINITY MAP
NTS

ZONE SFD 10,000 – 15,000
SETBACK AND EASEMENT DETAIL

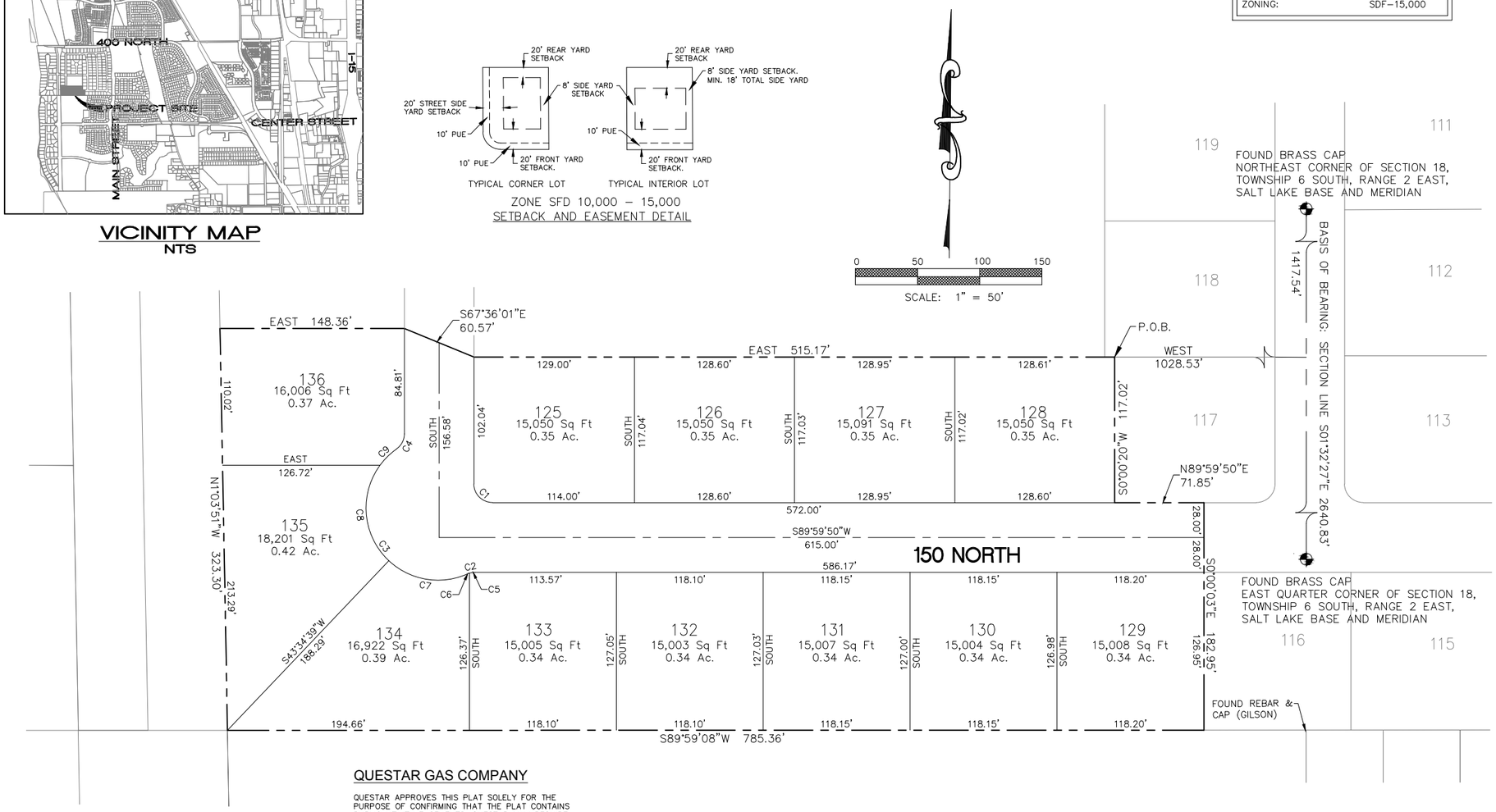

CURVE TABLE					
CURVE	LENGTH	RADIUS	DELTA	CHORD	CHORD BEARING
C1	23.56	15.00	90°00'10"	21.21	S45°00'05"E
C2	6.30	15.00	24°04'47"	6.26	S77°57'27"W
C3	170.99	58.00	168°54'38"	115.46	S29°37'38"E
C4	14.35	15.00	54°49'41"	13.81	N27°24'51"E
C5	4.60	15.00	17°35'18"	4.59	S81°12'11"W
C6	1.70	15.00	6°29'29"	1.70	S69°09'47"W
C7	67.98	58.00	67°09'18"	64.16	S80°30'18"E
C8	84.43	58.00	83°24'03"	77.17	S5°13'37"E
C9	18.58	58.00	18°21'17"	18.50	S45°39'03"W

DEVELOPER: FLAGSHIP HOMES
170 SOUTH INTERSTATE PLAZA, SUITE 250
LEHI, UT 84043 801-766-4442

TRANE ENGINEERING, P.C.
CONSULTING ENGINEERS AND LAND SURVEYORS
27 EAST MAIN LEHI, UTAH 84043 (801) 768-4544

QUESTAR GAS COMPANY

QUESTAR APPROVES THIS PLAT SOLELY FOR THE PURPOSE OF CONFIRMING THAT THE PLAT CONTAINS PUBLIC UTILITY EASEMENTS. QUESTAR MAY REQUIRE OTHER EASEMENTS IN ORDER TO SERVE THIS DEVELOPMENT. THIS APPROVAL DOES NOT CONSTITUTE ABROGATION OR WAIVER OF ANY OTHER EXISTING RIGHTS, OBLIGATIONS OR LIABILITIES PROVIDE BY LAW OR EQUITY. THIS APPROVAL DOES NOT CONSTITUTE ACCEPTANCE, APPROVAL OR ACKNOWLEDGEMENT OF ANY TERMS CONTAINED IN THE PLAT, INCLUDING THOSE SET FORTH IN THE OWNERS DEDICATION AND THE NOTES AND DOES NOT CONSTITUTE A GUARANTEE OF PARTICULAR TERMS OF NATURAL GAS SERVICE. FOR FURTHER INFORMATION PLEASE CONTACT QUESTAR'S RIGHT-OF-WAY DEPARTMENTS AT 800-366-6532.

ROCKY MOUNTAIN POWER

1. PURSUANT TO UTAH CODE ANN. 54-3-27 THIS PLAT CONVEYS TO THE OWNER(S) OR OPERATORS OF UTILITY FACILITIES A PUBLIC UTILITY EASEMENT ALONG WITH ALL THE RIGHTS AND DUTIES DESCRIBED THEREIN.
2. PURSUANT TO UTAH CODE ANN. 17-27A603(4)C(II) ROCKY MOUNTAIN POWER ACCEPTS DELIVERY OF THE PUE AS DESCRIBED IN THIS PLAT SOLELY FOR THE PURPOSE OF CONFIRMING THAT THE PLAT CONTAINS PUBLIC UTILITY EASEMENTS AND APPROXIMATES THE LOCATION OF THE PUBLIC UTILITY EASEMENTS, BUT DOES NOT WARRANT THEIR PRECISE LOCATION. ROCKY MOUNTAIN POWER MAY REQUIRE OTHER EASEMENTS IN ORDER TO SERVE THIS DEVELOPMENT. THIS APPROVAL DOES NOT AFFECT ANY RIGHT THAT ROCKY MOUNTAIN POWER HAS UNDER:
   a. A RECORDED EASEMENT OR RIGHT-OF-WAY
   b. THE LAW APPLICABLE TO PRESCRIPTIVE RIGHTS
   c. TITLE 54, CHAPTER 8A, DAMAGE TO UNDERGROUND FACILITIES
   d. ANY OTHER PROVISION OF LAW

NOTES

1. PLAT MUST BE RECORDED WITHIN 12 MONTHS OF FINAL PLAT APPROVAL, OR FOR PHASED DEVELOPMENTS, WITHIN 24 MONTHS OF RECORDATION OF MOST RECENT PHASE. THE FIRST FINAL PLAT APPROVAL WAS GRANTED ON THE DAY OF , 20 .
2. THE INSTALLATION OF IMPROVEMENTS SHALL CONFORM TO ALL CITY STANDARDS, REGULATIONS, AND ORDINANCES.
3. BUILDING PERMITS WILL NOT BE ISSUED UNTIL ALL IMPROVEMENTS HAVE BEEN INSTALLED AND ACCEPTED BY THE CITY IN WRITING OR BONDED FOR.
4. NO BUILDING PERMITS SHALL BE ISSUED UNTIL ALL IMPACT AND CONNECTION FEES ARE PAID IN FULL PER CITY REGULATIONS IN EFFECT AT THE TIME OF BUILDING PERMIT ISSUANCE.
5. DRIVEWAYS AND LOT ACCESS SHALL BE LIMITED TO INTERIOR LOCAL SUBDIVISION STREETS ONLY.
6. DRAINAGE SHALL NOT CROSS PROPERTY LINES. EXCESS OR CONCENTRATED DRAINAGE SHALL BE CONTAINED ON SITE OR DIRECTED TO AN APPROVED DRAINAGE FACILITY.
7. VINEYARD ACCEPTS NO RESPONSIBILITY FOR ANY PROPERTY DAMAGE CAUSED BY GROUND WATER FLOODING.
8. ALL BUILDING AND DEVELOPMENT SHALL BE IN CONFORMANCE WITH THE VINEYARD ZONING ORDINANCE.
9. PROPERTY OWNERS SHOULD BE AWARE THAT THIS AREA IS LOCATED IN THE VICINITY OF A RAILROAD SYSTEM.
10. ALL ROADWAYS DEDICATED TO VINEYARD CITY.
11. 5' SIDE YARD SETBACK MUST REMAIN CLEAR FOR ACCESS.

ACCEPTANCE BY LEGISLATIVE BODY

THE LEGISLATIVE BODY OF VINEYARD CITY OF UTAH COUNTY, APPROVES THIS SUBDIVISION AND HEREBY ACCEPTS THE DEDICATION OF ALL STREETS, EASEMENTS, AND OTHER PARCELS OF LAND INTENDED FOR PUBLIC PURPOSES FOR THE PERPETUAL USE OF THE PUBLIC THIS _____ DAY OF_____ 20 ____ .

VINEYARD PLANNING COMMISSION CHAIR DATE: ___/___/_____	VINEYARD ATTORNEY DATE: ___/___/_____
VINEYARD ENGINEER DATE: ___/___/_____	CITY MANAGER DATE: ___/___/_____
CLERK/RECORDER DATE: ___/___/_____	

SURVEYOR'S CERTIFICATE

I, TRAVIS TRANE, DO HEREBY CERTIFY THAT I AM A PROFESSIONAL LAND SURVEYOR AND THAT I HOLD LICENSE NO. 5152741, IN ACCORDANCE WITH TITLE 58, CHAPTER 22 OF THE PROFESSIONAL ENGINEERS AND LAND SURVEYORS LICENSING ACT, UTAH CODE ANNOTATED, 1953 AS AMENDED, I FURTHER CERTIFY THAT BY AUTHORITY OF THE OWNERS, A SURVEY WAS MADE UNDER MY DIRECTION OF THE TRACT OF LAND SHOWN AND DESCRIBED ON THIS DEDICATION PLAT, I CERTIFY THAT SAID SURVEY WAS COMPLETED IN ACCORDANCE WITH SECTION 17-23-17, UTAH CODE ANNOTATED, 1953 AS AMENDED, I FURTHER CERTIFY THAT I HAVE VERIFIED ALL MEASUREMENTS AND THAT MONUMENTS HAVE BEEN PLACED AS SHOWN ON THIS PLAT, I HEREBY STATE THAT THIS PLAT IS TRUE AND CORRECT TO THE BEST OF MY KNOWLEDGE, INFORMATION, BELIEF AND IN MY PROFESSIONAL OPINION.

_____ _____
(SURVEYOR), P.L.S. DATE

BOUNDARY DESCRIPTION

A parcel of land which is situate in the Northeast Quarter of Section 18, Township 6 South, Range 2 East, Salt Lake Base and Meridian, which parcel is described as follows:
Beginning at a point which is South 01°32'27" East 1,417.54 feet along the section line and West 1028.53 feet from the Northeast Corner of Section 18, Township 6 South, Range 2 East, Salt Lake Base and Meridian: thence South 00°00'20" West 117.02 feet; thence North 89°59'50" East 71.85 feet; thence South 00°00'03" East 182.95 feet; thence South 89°59'08" West 785.36 feet; thence North 01°03'51" West 323.30 feet; thence East 148.36 feet; thence South 67°36'01 East 60.57 feet; thence East 515.17 feet to the point of beginning.

5.33 acres more or less.

Basis of bearing: The line between the Northeast Corner and the East Quarter Corner of Section 18, Township 6 South, Range 2 East, Salt Lake Base and meridian which bears South 01°32'27" East.

OWNER'S DEDICATION

KNOW ALL MEN BY THESE PRESENTS THAT THE UNDERSIGNED ARE THE OWNER(S) OF THE ABOVE DESCRIBED TRACT OF LAND, AND HEREBY CAUSE THE SAME TO BE DIVIDED INTO LOTS, PARCELS AND STREETS, TOGETHER WITH EASEMENTS AS SET FORTH TO BE HEREAFTER KNOWN AS HAMPTON AT WATERS EDGE PLAT "D", AND DO HEREBY DEDICATE FOR THE PERPETUAL USE OF THE PUBLIC ALL ROADS AND OTHER AREAS SHOWN ON THIS PLAT AS INTENDED FOR PUBLIC USE. THE UNDERSIGNED OWNER(S) ALSO HEREBY CONVEY TO ANY AND ALL PUBLIC UTILITY COMPANIES A PERPETUAL, NON-EXCLUSIVE EASEMENT OVER THE PUBLIC UTILITY EASEMENTS SHOWN ON THIS PLAT, THE SAME TO BE USED FOR THE INSTALLATION, MAINTENANCE AND OPERATION OF UTILITY LINES AND FACILITIES.

IN WITNESS WHEREOF, WE HAVE HERE UNTO SET OUR HANDS THIS _____ DAY OF _____ A.D. 20 ____ .

SIGNATURE	PRINT NAME	TITLE & ENTITY
SIGNATURE	PRINT NAME	TITLE & ENTITY

ACKNOWLEDGEMENT

STATE OF UTAH }
COUNTY OF UTAH } S.S.
ON THIS THE _____ DAY OF _____ , A.D. 20 ____ ,
PERSONALLY APPEARED BEFORE ME,

_____

WHO BEING DULY SWORN OR AFFIRMED, DID SAY THAT HE/SHE/THEY SIGNED THE OWNER'S DEDICATION FREELY AND VOLUNTARILY AND FOR THE PURPOSES THEREIN MENTIONED.

_____
NOTARY PUBLIC

_____
MY COMMISSION EXPIRES:

PLAT "D"

HAMPTON AT WATERS EDGE

A RESIDENTIAL SUBDIVISION

VINEYARD, UTAH COUNTY, UTAH
SCALE: 1"= 50 FEET

SURVEYOR SEAL	NOTARY PUBLIC SEAL	CLERK-RECORDED SEAL

RECORDING INFORMATION

Bicycle Committee Appointments

Caden Rhoton
Mike Houston
Burton Hohman
Andrew Terry
Anthony Jenkins

Community Development

Date: July 22, 2020
From: Morgan Brim, Community Development Director
To: Mayor and City Council
Item: 8.1 Consideration of an Ordinance for the creation of a new district, Neighborhood Commercial and Zoning Map Amendment
Applicant: Telos Academy

OVERVIEW:
Establishment of Districts and Zoning Tables Section 15.12: Proposal to add a new zoning district: Neighborhood Commercial (NC). The NC district provides a transition zone between large impact uses, like major commercial areas and arterials to residential neighborhoods. This district provides allowance for mixed uses within a development or single building. A new use: Clinical Support Housing is proposed which allows patients and staff members of the clinical or educational program to live on site. This use is limited to 50% of the square footage of the building or development. This provision will ensure a high level of commercial square footage. The Telos Academy has recently approached the city with a concept to construct a new building at 600 S. Geneva Road, adjacent to their current facility, which is location directly across our city boundary line in Orem. Additionally, the applicant is applying to rezone their property from Regional Commercial to Neighborhood Commercial.

RECOMMENDATION:
The Planning Commission recommended approved of the proposed updated ordinance in their July 15, 2020 meeting. Staff recommends approval of the proposed ordinance.

PROPOSED MOTION:
"I move to approve Ordinance 2020-05 for the Neighborhood Commercial Text and Zoning Map Amendment."

Attachments:
Proposed ordinance

VINEYARD
ORDINANCE 2020-05

AN ORDINANCE OF THE VINEYARD CITY COUNCIL, VINEYARD, UTAH, AMENDING THE VINEYARD ZONING ORDINANCE SECTION 15.12 ESTABLISHMENT OF DISTRICTS AND ZONING TABLES TO CREATE A NEW ZONING DISTRICT: NEIGHBORHOOD COMMERCIAL (NC) AND INCLUDING A NC DISTRICT PURPOSE STATEMENT; TO AMENDMENT THE VINEYARD ZONING MAP AT 600 SOUTH GENEVA ROAD FROM REGIONAL COMMERCIAL (RC) TO NEIGHBORHOOD COMMERCIAL (NC), SERIAL NO. 39:228:0002; PROVIDING A REPEALER CLAUSE; PROVIDING A SAVINGS AND SEVERABILITY CLAUSE, PROVIDING FOR PUBLICATION; AND PROVIDING AN EFFECTIVE DATE.

WHEREAS, Title 10, Chapter 9a Municipal Land Use, Development, and Management Act of the Utah Municipal Code permits the City of Vineyard to ensure the health, safety, and the welfare of the community through local land use planning and the adoption of land use ordinances; and

WHEREAS, the City of Vineyard is authorized to amend the City's Zoning Ordinance pursuant to Utah Municipal Code 10-9a-102(2); and

WHEREAS, the Planning Commission held a public hearing on June 3, 2020, and after fully considering staff recommendations, recommended approval to the Vineyard City Council on June 3, 2020, and

WHEREAS, The Vineyard City Council, having reviewed the proposed text amendments held a public hearing on June 24, 2020; and

WHEREAS, the Vineyard City Council having considered the recommendation of the Planning Commission and submitted comments and testimony from the public, having determined that it is in the best interest of the public, and adopt the proposed text amendments to the Zoning Ordinance.

NOW THEREFORE, be it ordained by the Council of Vineyard, in the State of Utah, as follows:

SECTION 1: **<u>AMENDMENT</u>** "15.12.050 District Use Table*" of the Vineyard Zoning Code is hereby *amended* as follows:

A M E N D M E N T

15.12.050 District Use Table*

1. District Use Table: The district use table lists all use types and zoning districts where the use type is permitted (P), allowed through the provision of a conditional use permit (C), permitted as an accessory use (A) to a principal use or permitted for temporary timeframe (T).
2. Prohibited Uses: All uses marked with an "x" in the district use table or not specifically listed are prohibited, except where state or federal law otherwise preempts local land use regulation.
3. Additional Requirements: In addition to requirements listed at the bottom of the district use table, additional requirements for specific uses are listed in VZC 15.14 Special Purpose Districts, VZC 15.32 General Property Development Standards and VZC 15.34 Supplementary Development Standards of the zoning ordinance.

Accessory Use: An accessory use, unless otherwise permitted in the zoning ordinance, shall not commence and no accessory structure shall be constructed without a principal use first being lawfully established on the subject site. P = Permitted Use; C = Conditional Use; T = Temporary Use; N = Non-Permitted Use; X^x = Indicates Additional Standards Below

ZONING DISTRICT USES		OS	A-1	R&A-5	RE-20	R-1-15	R-1-10	R-1-8	R-2-15	HDR-1	HDR-2	RMU	FMU	BP	RC	NC	FOI	M	PF
RESIDENTIAL[8]	Clinical Support Housing	N	N	N	N	N	N	N	N	N	N	N	N	N	N	P[8]	N	N	N
	Dwelling, Multiple-Family	N	N	N	N	N	N	N	N	N	P	P	P	N	N	N~~P~~[8]	N	N	N
	Dwelling Single-Family	N	P	P	P	P	P	P	P	P	N	P	N	N	N	N	N	N	N
	Dwelling, Two-Family	N	N	N	N	N	N	N	P	P	N	P	P	N	N	N	N	N	N
	Model Home or Unit	N	P	P	P	P	P	P	P	P	P	P	N	N	N	P	N	N	N
	Residence for Persons with a Disability	N	P[2]	P[2]	P[2]	P[2]	P[2]	P[2]	P[2]	P[2]	P[2]	N	N	N	N	~~p~~[2]	N	N	N
	Residence for Persons with a Disability that are Substance Abuse Facilities located within 500 feet of a school	N	C[5]	C[5]	C[5]	C[5]	C[5]	C[5]	C[5]	C[5]	C[5]	N	N	N	N	C[5]	N	N	N
	Residential																		

	Facility for Elderly Persons	N	P[2]	P[2]	P[2]	P[2]	P[2]	P[2]	P[2]	P[2]	P[2]	N	N	N	N	N	N	N	N
	Residential Lease, Short-term	N	N	N	N	N	N	N	N	N	N	N	N	N	N	N	N	N	N
	Agriculture, Commercial	P	P	P	N	N	N	N	N	N	N	N	N	N	N	N	N	N	N
	Animal Hospital	N	N	N	N	N	N	N	N	N	N	P	N	N	P	C	P	P	N
	Financial Institution	N	N	N	N	N	N	N	N	N	N	P	P	C	P	P	P	N	N
	Billboard	N	N	N	N	N	N	N	N	N	N	N	N	N	N	N	N	N	N
	Car Wash	N	N	N	N	N	N	N	N	N	N	C	N	N	C[3]	N	C	P	N
	Chemical Manufacture, Storage, and Distribution (Existing)	N	N	N	N	N	N	N	N	N	N	N	N	N	N	N	N	N	N
	Commercial Day Care/Preschool Center	N	N	N	N	N	N	N	N	N	N	C	C	C	C	C	C[3]	N	N
	Commercial Plant Nursery	N	C	C	N	N	N	N	N	N	N	C	N	N	P	N	P	P	N
	Commercial Recreation, Indoor	N	N	N	N	N	N	N	N	N	N	C	C	C	P	P	N	N	N
	Commercial Recreation, Outdoor	N	C	C	N	N	N	N	N	N	N	C	N	C	C	N	N	N	N
	Composting Facility	N	N	N	N	N	N	N	N	N	N	N	N	N	N	N	N	C	N
	Construction Sales and Service	N	N	N	N	N	N	N	N	N	N	P	N	N	C	N	C	P	N
	Contractor's Office/Storage Yard	N	N	N	N	N	N	N	N	N	N	N	N	N	N	N	N	P	N
	Distribution Center	N	N	N	N	N	N	N	N	N	N	C	N	C	N	N	N	P	N
	Drive-thru Facility	N	N	N	N	N	N	N	N	N	N	P[7]	P[7]	N	P[7]	N	N	P[7]	N
	Dry Cleaning	N	N	N	N	N	N	N	N	N	N	P	P	N	P	P	P	N	N

	Flammable Liquids or Gases Manufacture, Storage and Distribution	N	N	N	N	N	N	N	N	N	N	C	N	N	N	N	N	C	N
	Funeral Home/Mortuary	N	N	N	N	N	N	N	N	N	N	C	N	C	N	C	N	N	N
	Golf Course	C	C	C	N	C	N	N	N	N	N	N	N	N	N	N	N	N	N
	Health and Fitness Facility	N	N	N	N	N	N	N	N	N	N	P	P	P	P	P	N	N	N
	Hotel	N	N	N	N	N	N	N	N	N	N	C	C	C	C	C	N	N	N
	Hybrid Production Facility	N	N	N	N	N	N	N	N	N	N	C	C	N	C	C	P	N	N
	Kennel, Commercial	N	N	N	N	N	N	N	N	N	N	N	N	N	C	N	P[2]	P[2]	N
	Kennel, Outdoor Commercial	N	N	N	N	N	N	N	N	N	N	N	N	N	N	N	C[2]	C[2]	N
	Laundry, Commerical	N	N	N	N	N	N	N	N	N	N	C	C	N	N	N	P	P	N
	Laundry, Self Serve	N	N	N	N	N	N	N	N	N	N	P	P	P	N	P	P	P	N
	Manurfacturing, Heavy	N	N	N	N	N	N	N	N	N	N	N	N	N	N	N	N	C	N
	Manufacturing, Light	N	N	N	N	N	N	N	N	N	N	N	N	P	N	N	P	P	N
	Medical and Dental Clinic	N	N	N	N	N	N	N	N	N	N	P	P	P	N	P	N	N	N
COMMERCIAL	Medical or Dental Laboratory	N	N	N	N	N	N	N	N	N	N	P	P	P	N	P	P	P	N
	Motel	N	N	N	N	N	N	N	N	N	N	C	C	C	C	C	N	N	N
	Motor Vehicle Fueling Station	N	N	N	N	N	N	N	N	N	N	C	N	N	C	N	C	N	N
	Nightclub	N	N	N	N	N	N	N	N	N	N	C	C	N	C	C	N	N	N
	Nursing Care Facility	N	N	N	N	N	N	N	N	N	N	C	C	C	N	N	N	N	N
	Nursing Home, Convalescent Care	N	C	C	C	C	C	C	C	C	C	N	N	N	N	N	N	N	N
	Office	N	N	N	N	N	N	N	N	N	N	P	P	P	P[4]	P	P[4]	N	N

Pawnshop	N	N	N	N	N	N	N	N	N	N	C	N	N	N	N	N	N	N
Personal Care Services	N	N	N	N	N	N	N	N	N	N	P	P	N	P	P	N	N	N
Personal Instruction Service	N	N	N	N	N	N	N	N	N	N	P	P	C	P	P	C	N	N
Private Club	N	N	N	N	N	N	N	N	N	N	C	C	C	C	~~C~~	N C	N	N
Restaurant	N	N	N	N	N	N	N	N	N	N	P	P	P	P	P	P	N	N
Retail Sales and Services	N	N	N	N	N	N	N	N	N	N	P	P	P[3]	P	P	P[3] 3	N	N
Retail Sales and Services (Community Commercial)	N	N	N	N	N	N	N	N	N	N	P	P	N	N	P	N	N	N
Retail Sales and Services (Regional)	N	N	N	N	N	N	N	N	N	N	P	P	N	P	N	N	N	N
Salvage Yard	N	N	N	N	N	N	N	N	N	N	N	N	N	N	N	N	C	N
Sexually Oriented Business	N	N	N	N	N	N	N	N	N	N	N	N	N	N	N	N	C	N
Storage - Self Service Mixed-Use Facility	N	N	N	N	N	N	N	N	N	N	C 2	N	C 2	C 2	C 2	C 2	N	N
Storage - Self Service	N	N	N	N	N	N	N	N	N	N	N	N	N	N	N	N	P	N
Storage of Recreational Vehicles	N	N	N	N	N	N	N	N	N	N	N	N	N	N	N	N	P	N
Trailer/RV Camping Facilities	N	N	N	N	N	N	N	N	N	N	N	N	N	N	N	N	N	N
Vehicle and Equipment Rental	N	N	N	N	N	N	N	N	N	N	N	N	N	C	N	C	N	N
Vehicle and Equipment Repair (Major)	N	N	N	N	N	N	N	N	N	N	N	N	N	C	N	C	P	N
Vehicle and Equipment Repair (Minor)	N	N	N	N	N	N	N	N	N	N	N	N	N	C	N	C	P	N

	Vehicle and Equipment Sale and Rental New or Used (Heavy)	N	N	N	N	N	N	N	N	N	N	N	N	N	C	N	C	N	N
	Vehicle and Equipment Sale or Rental New or Used (Light)	N	N	N	N	N	N	N	N	N	N	N	N	N	C	N	P	N	N
	Warehouse	N	N	N	N	N	N	N	N	N	N	N	N	C	N	N	P	P	N
	Warehouse Club	N	N	N	N	N	N	N	N	N	N	C	N	N	C	N	N	N	N
	Wholesale Distribution	N	N	N	N	N	N	N	N	N	N	C	N	C	N	N	P	P	N
PUBLIC AND INSTITUTIONAL	Assembly, Place of	N	C[1]	C[1]	C[1]	C[1]	C[1]	C[1]	C[1]	C[1]	C[1]	C	C	C	N	C	N	N	N
	Commuter and Light Rail Facilities and Station	N	N	N	N	N	N	N	N	N	N	P	P	C	C	C	C	C	C
	Earth Station (Satellite Dish Farm)	N	N	N	N	N	N	N	N	N	N	N	N	C	N	N	N	P	N
	Educational Facility	N	C	C	C	C	C	C	C	C	C	P	P	P	C	P	N	N	N
	Emergency Care Facility	N	N	N	N	N	N	N	N	N	N	p	P	C	N	N	N	N	N
	Environmental Remediation Activities	N	N	N	N	N	N	N	N	N	N	P	P	P	P	N	P	P	P
	Farmers' Market	N	N	N	N	N	N	N	N	N	N	C	C	C	N	C	N	N	C
	Heliport	N	N	N	N	N	N	N	N	N	N	C	N	N	C	N	N	C	N
	Hospital	N	N	N	N	N	N	N	N	N	N	C	C	N	N	N	N	N	N
	Liquor Store (State Owned)	N	N	N	N	N	N	N	N	N	N	C	C	N	C	C	N	N	N
	Major Facility of a Public Utility	C	C	C	C	C	C	C	C	C	C	C	N	N	C	N	C	C	C
	Minor Facility of a Public Utility	P	P	P	P	P	P	P	P	P	P	C	C	P	C	C	P	P	P
	Museum	N	N	N	N	N	N	N	N	N	N	P	P	C	C	P	N	N	N
	Open Space and Trails	P	P	P	P	P	P	P	P	P	P	P	P	P	P	P	P	P	P
	Parks and																		

	Associated Facilities	P	P	P	P	P	P	P	P	P	P	P	P	P	P	P	P	P	P
	Park and Ride Facility	N	N	N	N	N	N	N	N	N	N	P	N	C	N	N	P	P	N
	Power Plant	N	N	N	N	N	N	N	N	N	N	N	N	N	N	N	N	C	N
	Public Use	C	C	C	C	C	C	C	C	C	C	C	C	C	C	C	C	C	P
	Recycling Collection Center	N	N	N	N	N	N	N	N	N	N	N	N	N	N	N	C	P	N
	Recycling Processing Facility	N	N	N	N	N	N	N	N	N	N	N	N	N	N	N	N	C	N
	Transit Passenger Hub (Intermodal)	N	N	N	N	N	N	N	N	N	N	P	P	N	C	N	C	C	C
	Wireless Telecommunications Site/Facility	N	C[2]	C[2]	N	N	N	N	N	N	N	C[2]	C[2]	C[2]	N	N	C[2]	C[2]	C[2]
ACCESSORY	Accessory Building	P[2]	P[2]	P[2]	P[2]	P[2]	P[2]	P[2]	P[2]	P[2]	P[2]	N	N	N	N	~~p~~ [2]	N	N	N
	Accessory Dwelling Unit	N	P[2]	P[2]	P[2]	P[2]	P[2]	P[2]	P[2]	P[2]	P[2]	N	N	N	N	N	N	N	N
	Accessory Dwelling Unit for Owner or Employee	N	P	P	N	N	N	N	N	N	N	N	N	N	N	P	C	C	N
	Accessory Use	P	P	P	P	P	P	P	P	P	P	P	P	P	P	P	P	P	P
	Billboard	N	N	N	N	N	N	N	N	N	N	N	N	N	N	N	N	N	N
	Domestic Livestock and Fowl	N	P[2]	P[2]	N	N	N	N	N	N	N	N	N	N	N	N	N	N	N
	Home Day Care (one to seven children)	N	P	P	P	P	P	P	P	P	P	N	N	N	N	N	N	N	N
	Home Day Care (eight to ten children)	N	C	C	C	C	C	C	C	C	C	N	N	N	N	N	N	N	N
	Home Occupation	N	P[2]	P[2]	P[2]	P[2]	P[2]	P[2]	P[2]	P[2]	P[2]	P[2]	N	N	N	~~p~~ [2]	N	N	N
	Home Preschool (one to seven	N	P	P	P	P	P	P	P	P	P	N	N	N	N	N	N	N	N

USES	children)																	
	Home Preschool (eight to ten children)	N	C	C	C	C	C	C	C	C	C	N	N	N	N	N	N	N
	Household Pets, Noncommercial	N	P[2]	P[2]	P[2]	P[2]	P[2]	P[2]	P[2]	P[2]	P[2]	N	N	N	N	~~p~~ 2	N	N	N
	Open/Outdoor Display of Products or Merchandise	N	N	N	N	N	N	N	N	N	N	C	N	N	C	C	C	P	N
	Seasonal Use	T[5]	N	N	N	N	N	N	N	N	N	T[5]	T[5]	T[5]	T[5]	T[5]	T[5]	N	N
	Sign - Temporary	T[6]	T[6]	T[6]	T[6]	T[6]	T[6]	T[6]	T[6]	T[6]	T[6]	T[6]	T[6]	T[6]	T[6]	T[6]	T[6]	T[6]	T[6]
	Swimming Pool	P	C[2]	P[2]	P[2]	P[2]	P[2]	P[2]	P[2]	P[2]	P[2]	P[2]	P[2]	N	N	~~p~~ 2	N	N	N
	Temporary Use	T[5]	T[5]	T[5]	T[5]	T[5]	T[5]	T[5]	T[5]	T[5]	T[5]	T[5]	T[5]	T[5]	T[5]	T[5]	T[5][5]	T[5]	T
	Tennis Court/Sports Court	C	C	C	C	C	C	C	C	C	C	N	N	N	N	P	N	N	C

1. Religious institutions are allowed through the provision of a conditional use permit. No other assembly uses as defined in VZC 15.60 of this ordinance are permitted.

2. See VZC 15.34 for additional use development standards.

3. Use is allowed as an accessory use to a principle use.

4. Use shall not exceed 25% of the net square footage of a single building or development.

5. See VZC 15.26 for additional use standards.

6. See VZC 15.48 for signage requirements.

7. In accordance with the District Use Table above, drive-thru facilities complying with all standards listed in Section 15.34.190 Part 1 through 11 of the VZC are considered a permitted use. Drive-thru facilities containing a drive aisle between the building's front façade and the front property line shall require the approval of a conditional use permit. See Part 12 of Section 15.34.190 of the VZC.

8. ~~Residential~~ Clinical Support Housing use~~s~~ shall not exceed 50% of the net square footage of a single building or development. ~~Residential uses shall not be located on the ground floor street-facing sides of buildings. The ground floor street-facing sides of buildings shall be dedicated to non-residential uses.~~

SECTION 2: **AMENDMENT** "15.12.030 Zoning Districts Purpose" of the Vineyard Zoning Code is hereby *amended* as follows:

AMENDMENT

15.12.030 Zoning Districts Purpose

The zoning districts of the city are provided to achieve the purposes of the general plan, all adopted land use ordinances and the purposes of LUDMA.

1. Agricultural District (A-1). The A-1 District is provided to allow locations within the city devoted primarily to the raising of livestock, growing crops, and to preserve and protect the continued use of the property for agricultural purposes by excluding incompatible development. Additionally, this district is provided to allow very low-density residential uses compatible with the environmental values and qualities of the property. The A-1 District recognizes and allows existing agricultural and farming activities to continue, consistent with the provisions and requirements of the A-1 District.
2. Residential Agriculture District (RA-5). The R&A-5 District is provided to allow low-density residential uses with the opportunity for keeping of domestic livestock and the operation and maintenance of small farms and hobby farms. The primary land uses allowed are small farms, single-family dwellings, and associated and compatible accessory uses.
3. Residential Estates District (RE-20). The RE-20 District is provided for low-density residential estates neighborhoods with a quality of openness. This district is intended to promote, preserve, and protect single-family residential development. The principal land use allowed is single-family dwellings and accessory uses in recognition and sensitivity to the physical environment of the district.
4. Single-Family Residential (R-1-15, R-1-10 and R-1-8). The R-1-15, R- 1-10 and R-1-8 Districts are provided to maintain and allow opportunities for average sized lot single-family residential areas for single-family residential dwellings.
5. Multiple Residential (R-2-15, HDR-1 and HDR-2). The R-2-15, HDR-1 and HDR-2 Districts are provided to allow medium and high-density multiple family residential areas. These districts allow the development of single-family, duplex units, townhouses, condominiums and apartments to provide a full range of housing choices for city residents and amenities and conveniences in a pleasing and attractive residential environment with adequate light, air, open space, and landscaped areas.
6. Business Park (BP). The purpose of the BP District is to provide an attractive and nuisance free environment for the establishment of professional offices, light assembly and warehouse development in a campus-like and convenient setting.
7. Neighborhood Commercial (NC). The purpose of the NC District is to provide mixed-use transition areas between major roadways and high impact uses between residential neighborhoods.-

8. Regional Commercial (RC). The purpose of the RC District is to provide areas for the location of various types of commercial uses and activities needed to serve the residents of the city, and surrounding areas.

9. Flex Office & Industry (FOI). The purpose of the FOI District is to provide an area in the city to foster economic development, establish employment centers and provide flexible development standards to accommodate business expansion. Land uses in the FOI District will be concentrated in information technology, pharmaceuticals, light manufacturing, biotechnology, light industrial and business development and will primarily be contained within quality structures and limit external impacts to surrounding properties.
10. Manufacturing and Industrial (M and I-1): The purpose of the M and I-1 Districts is to recognize and provide for established manufacturing and industrial uses existing in the city and also provide an environment for larger and more intensive industrial uses that do not require, and may not be appropriate, for a nuisance free environment.
11. Open Space (OS): The purpose of the OS District is to establish areas for enhanced natural environments and outdoor recreation. This district is intended to preserve, maintain and protect open space resources; protect access to Utah Lake and to encourage development of a comprehensive network of permanent, multifunctional publicly and privately owned open spaces in the city.
12. Public Facilities (PF): The purpose of the PF District is to provide areas for public facilities and to recognize the public and institutional nature of particular parcels of land within the city. This district is intended to ensure that the public, quasi-public, and institutional uses of property is related to the policies of the general plan.
13. Special Purpose Zoning Districts. Special Purpose Zoning Districts are provided to meet specific needs and goals of the city as follows:
    a. Planned Development Overlay (PD). The PD District is provided as an overlay zoning district to allow residential development opportunities with a greater degree of flexibility than may be allowed by the underlying zoning districts. The PD District requires creativity and uniqueness in the proposed development with recognition of the environmental and community values existing on the development site. The PD District promotes the efficient use of all land resources and requires the provision of development and community amenities, with the preservation of the natural and scenic qualities of the development site.
    b. Regional Mixed Use (RMU). The purpose of the RMU District is to promote the goals of the general plan in areas of the city that are designated by the general plan for a combination of land uses in a mixed-use development pattern either horizontal or vertical design. This zoning designation recognizes that adherence to a traditional pattern of development standards would preclude the application of a more flexible approach. Commercial, employment, and residential uses are encouraged to be provided with intensities and densities that promote a mix of day and nighttime activities. Developments within this district shall be compatible with surrounding existing and planned land uses.
    c. Town Center (TC). The purpose of the TC District is to facilitate the creation of an urban- style community center with places to visit, live, work, recreate, and

shop. It promotes a mix of uses, including: residential, professional office, retail commercial, and community amenities. It also anticipates a future multi-modal transit hub with commuter rail, light rail, and bus service.

d. Water's Edge (WE). The WE District is a master planned community that includes a range of residential homes, from large homes on large lots to multi-family/condominium housing and is located within a network of open spaces including parks, trails, and native open areas. The WE District has been designed to promote an active family lifestyle where residents are encouraged to walk between neighborhoods and several community gathering places including the Utah Lake shoreline.

e. The Forge Mixed Use (FMU). The FMU District is intended to encourage a mixture of commercial, office and residential uses within an urban neighborhood atmosphere. Development in the FMU District is intended to provide a pedestrian oriented, safe, and attractive streetscape, and a controlled and compatible setting for residential and commercial development. The standards are intended to achieve established objectives for urban and traditional design, pedestrian amenities, and land use regulation.

SECTION 3: **AMENDMENT** "15.12.060 Dimensional Standards Table" of the Vineyard Zoning Code is hereby *amended* as follows:

AMENDMENT

15.12.060 Dimensional Standards Table

1. Unless otherwise specified, development in the city shall comply with the standards set forth in the Dimensional Standards Table. Special purpose districts standards are located in VZC 15.14 Special Purpose Districts.

Dimensional standards regulating accessory buildings of VZC 15.34.030 shall apply.
All other applicable development standards are located within various chapters of the zoning ordinance.

Dimensional Standards Table

STANDARDS	OS	A-1	R & A-5	RE-20	R-1-15	R-1-10	R-1-8	R-2-15	HDR-1	HDR-2	RMU	BP	RC	NC	FOI	M	PF
				40,	15,	10,		15,000 sf per SFD or	10,000 sf plus	8,000 sf plus 4,50		40			20,	20	

Minimum Lot Size	NA	40 Acres	5 Acres	000 sf	000 sf	000 sf	8,000 sf	25,000 sf per Two-Family Dwelling	5,000 sf per multi-family unit.	0 sf per multi-family unit.	10 acres[1].	,000 sf	NA	NA	000 sf	,000 sf	NA
Maximum Base Density allowed by a PD Overlay District in Units Per Acre	NA	1 unit per 20 acres	1 unit per 5 acres	1.75 units per acre	2.32 units per acre	3.5 units per acre	4.35 units per acre	2.33 SFD units per acre. 2.8 Two-family dwelling units per acre.	2-12 units per acre with an average of 8 units per acre.	9.7 units per acre.	NA	NA	NA	NA	NA	NA	NA
Minimum Lot Width	NA	Lot width to lot length ration not less than 1:3		100'	90'	80'	80'	100' for SFD and 120' for Two-Family Dwellings	60' unless other wise approved by the City Council.	120'	See standard # 1 below.	140'	NA	NA	100'	100'	NA
Minimum Distance Between Condominium & Multi-Family Units Primary Buildings located on the same Lot or	NA	NA	NA	NA	NA	NA	NA	NA	30'	30'		NA	NA	NA	NA	NA	NA

Parcel																	
Minimum Building Height	No primary building within any district shall be erected to a height less than one (1) story entirely above grade. See definition of story.																
Maximum Building Height	35'[2]	35'[2]	35'[2]	35'[2]	35'[2]	35'[2]	35'[2]	35'[2]	35'[2]	35'[2]	60'[2]	90'[2]	60'[2]	60'[6]	60'[2]	60'[2]	NA
Minimum Front Yard	NA	30'	30'	30'	30'	30'	20'	20'	20'	20'	See standard #1 below.	30'	20'	NA	25'	25'	NA
Minimum Side Yard - Interior Lots	NA	30'	30'	30'	30'	30'	20'	A total of at least 20' between the two side yards, with no side yard of less than 8'.	20', unless otherwise approved by the City Council.	20'		25'	20'	20'[7]	20'	20'	NA
Minimum Side Yard for Corner Lots	NA	30'	30'	30'	30'	30'	20'	20'	20'	20'		25'	25'	NA	25'	25'	NA
Minimum Rear Yard	NA	30'	30'	30'	30'	30'	20'	20'	20'	20'		25'	25'	20'[7]	25'	25'	NA
Maximum Building Lot Coverage (Principle and Accessory Buildings)	NA	NA	15%	50%	50%	50%	50%	50%	50%	50%	NA	NA	NA	NA	NA	NA	NA
Maximum encroachment of																	

Architectural Features Encroaching into required setback	NA	3'	3'	3'	3'	3'	3'	3'	3'	3'	3'	3'	3'	3'	3'	3'	NA
Accessory Buildings - In addition to the requirements of Section 15.34.030, the following dimensional standards apply:																	
Minimum Internal Side Setbacks	NA	3'	3'	3'	3'	3'	3'	3'	3'	3'	3'	NA	NA	3'	NA	NA	NA
Street Side Corner Lot Standards	See Section 15.34.030																
Minimum Rear Setbacks	NA	3'	3'	3'	3'	3'	3'	3'	3'	3'	3'	NA	NA	3'	NA	NA	NA
Minimum Distance from Principle Building	NA	6'	6'	6'	6'	6'	6'	6'	6'	6'	6'	NA	NA	6'	NA	NA	NA
Maximum Building Height	NA	NA	25'	25'[4]	25'[4]	25'[4]	25'[4]	25'[4]	25'[4]	25'[4]	25'[4]	NA	NA	25'[4]	NA	NA	NA
Roof Overhang Setback	NA	NA	1'[5]	1'[5]	1'[5]	1'[5]	1'[5]	1'[5]	1'[5]	1'[5]	1'[5]	NA	NA	1'[5]	NA	NA	NA
Maximum allowed rear yard building coverage.	NA	NA	50%	50%	50%	50%	50%	50%	50%	50%	50%	NA	NA	NA	NA	NA	NA

Additional Standards:

1. See VZC 15.14 Special Purpose Districts

for additional RMU Districts standards.2. Building height is measured from the top of the back of curb to the highest point of the building or structure. See also definition of "Building Height."4. For every one foot (1') in height above fifteen feet (15') the roof overhang setback shall be increased an additional one foot (1') from the internal side and rear property lines.5. For every one foot (1') in height above fifteen feet (15') the building setback shall be increased an additional one foot (1') from the internal side and rear property lines.

6. Buildings located in the NC District shall not exceed 35 feet in height when located within 50 feet of a property line of a parcel containing a detached single-family home.

7. No building setbacks are required for buildings located adjacent to parcels that do not contain stand-alone residential uses and are zoned for commercial uses.

SECTION 4: **AMENDMENT** "15.12.020 Establishment Of Districts" of the Vineyard Zoning Code is hereby *amended* as follows:

AMENDMENT

15.12.020 Establishment Of Districts

In order to carry out the provisions of this ordinance the Table of Zoning Districts divides the city of Vineyard into the following zoning districts:

Table of Zoning Districts

Standard Districts	OS	Open Space
	A-1	Agriculture - 1 District
	RA-5	Residential Agriculture District
	RE-20	Residential Estates - 20 District
	R-1-15	Single-Family - 15 District
	R-2-15	Residential R-2-15 District
	R-1-10	Single-Family - 10 District
	R-1-8	Single-Family - 8 District
	HDR-1	High Density Residential - HDR-1 District
	HDR-2	High Density Residential - HDR-2 District
	BP	Business Park District
	FOI	Flex Office Industry District
	M	Manufacturing District
	NC	Neighborhood Commercial
	I-1	Industrial Zone - 1 District
	PF	Public Facility
	RC	Regional Commercial District
Special Purpose Districts	RMU	Regional Mixed-Use
	TC	Town Center
	FMU	Forge Mixed-Use
	WE	Water's Edge
	PD	Planned Development Overlay District

SECTION 5: **AMENDMENT** "15.60.020 Definitions" of the Vineyard Zoning Code is hereby *amended* as follows:

AMENDMENT

15.60.020 Definitions

Words not defined herein shall have a meaning consistent with Webster's New Collegiate Dictionary, latest edition.

Abandon/Abandoned: Means a use that has been discontinued for a minimum period of one (1) year or a building, structure, sign, or other object that remains vacant or unused for a minimum period of one (1) year.

Abandonment: Any act that results to abandon.

Access: The provision of vehicular and/or pedestrian ingress and egress to a lot, parcel, building, or structure.

Accessory Building: A building customarily incidental and clearly subordinate to the primary building and located on the same lot as the primary building.

Accessory Use: A use clearly incidental, subordinate and customarily found in connection to the primary use and located on the same lot as the primary use.

Active or Valid Building Permit: A Building Permit that has not expired.

Adjacent Property/Adjacent Landowners: A lot or parcel of property, or the owner of record of such, according to the records of the Utah County Recorder that has a common boundary line with a lot or parcel of property that is the subject of some action before the city.

Affected Entity: Means a county, municipality, independent special District under Title 17A, Chapter 2, Independent Special Districts, Local District under Title 17B, Chapter 2, Local Districts, School District, interlocal cooperation entity established under Title 11, Chapter 13, InterLocal Cooperation Act, specified public utility, or the Utah Department of Transportation, if:

1. The entity's services or facilities are likely to require expansion or significant modification because of an intended use of land;
2. The entity has filed with the municipality a copy of the entity's general or long-range plan; or
3. The entity's boundaries or facilities are within one mile of land that is the subject of a general plan amendment or land use Ordinance change.

Agent: The person with written authorization to represent a property owner.

Agriculture: An area which is used for the commercial production, keeping, or maintenance for sale of plants and domestic animals typically found in Utah County, or lands devoted to a soil conservation management program, but excluding the keeping of prohibited animals, Commercial Plant Nursery, as defined herein, Concentrated Animal Feeding Operation, as defined by the U.C.A., 1953, as amended, and subject to the Utah Pollutant Discharge Elimination System (UPDES), or similar activities.

Agricultural Building: A structure used in conjunction with an allowed agriculture use, and not for human occupancy, and complying with the requirements of § 58-56-4, U.C.A., 1953, as amended. To qualify as an agricultural building the structure must meet all requirements of § 58-56-4(1), U.C.A., 1953, as amended.

Alcoholic Beverages: Means and includes beer and liquor as defined in the State of Utah Alcoholic Beverage Control Act, as amended.

Alteration: Any change, addition, or modification in construction of a building or structure.

Animal Hospital: A facility for the diagnosis, treatment and hospitalization of animals, that may include indoor holding facilities only for the treatment and observation of animals but does not include any outdoor holding or boarding facilities, unless Outdoor Boarding Kennels are listed as an allowed use in the Zoning Use Matrix.

Apiary: Any place where one (1) or more colonies of bees are located.

Appeal Authority: The person, board, commission, agency, or other body designated by this Ordinance to decide an appeal of a decision of a Land Use Application or a Variance.

Applicant: Any person(s) presenting a Land Use Application for any Approval, Permit, or License required by a Land Use Ordinance.

Application/Land Use Application: Written requests for an Approval, Permit, or License and completed in a manner prescribed by this Ordinance for review and decision by a Land Use Authority.

Application, Complete: An Application that includes all information requested on the appropriate form, and payment of all applicable fees.

Application, Incomplete: An Application that lacks information requested on the appropriate form, or lacks the payment of all applicable fees.

Architectural Projection: Any projection which is not intended for occupancy and which extends beyond the face of an exterior wall of a building, but shall not include signs.

Assembly, Place of: The use of land for a meeting place where persons gather together for purposes of attending civic, social, religious functions, recreational events or entertainment performances on a regular or recurring basis including, but not limited to, religious institutions, banquet facilities, funeral homes, theaters, conference centers, stadiums, and indoor or outdoor recreational facilities.

Awning: A roofed structure placed to extend outward from the building providing a protective shield for doors, windows, and other openings supported by the building or other supports.

Base District: A Zoning District that establishes regulations governing land use and site development in a specific geographic area.

Basement: A story partly underground and having at least one-half (1/2) its height below the average level of the adjoining ground.

Bay Window: A window or series of windows forming a recess or bay from a room and projecting outward from the wall.

Beekeeper: A person who keeps honeybees in order to collect honey and beeswax and pollinate crops.

Beekeeping Equipment: Anything used in the operation of an apiary, such as hive bodies, supers, frames, veils, gloves, top and bottom boards, extractors or other equipment to handle or manipulate bees, honey, wax, or hives.

Berm: A mound of earth used as a site feature, or to shield, screen, and buffer uses, undesirable views and to separate land uses.

Best Management Practices (BMPs): A practice, or combination of practices, determined to be the most effective (including technological, economic, and institutional considerations) means of preventing or reducing disturbance or disruption to the natural environment.

Billboard: A freestanding sign designed or intended to direct attention to a business, product, or service that is not provided, sold, offered, or existing on the property where the sign is located.

Buildable Area: That area of a lot or parcel which is outside of any required setback areas and outside of any other areas regulated by this Ordinance.

Building: Any structure, whether permanent or temporary, which is designed, intended, or used for occupancy by any person, business, animals, possessions, or for storage of property or materials of any kind.

Building Code: The International Building Code, as adopted by the city.

Building Facade: That portion of an exterior elevation of a building extending from the finished grade to the top of the parapet wall or eaves and the entire width of the building elevation.

Building Frontage: The horizontal, linear dimension of that side of a building abutting a street, a parking area, or other circulation area open to the public.

Building, Height: The vertical distance from the TOP OF THE BACK OF CURB to the highest point of the building or structure.

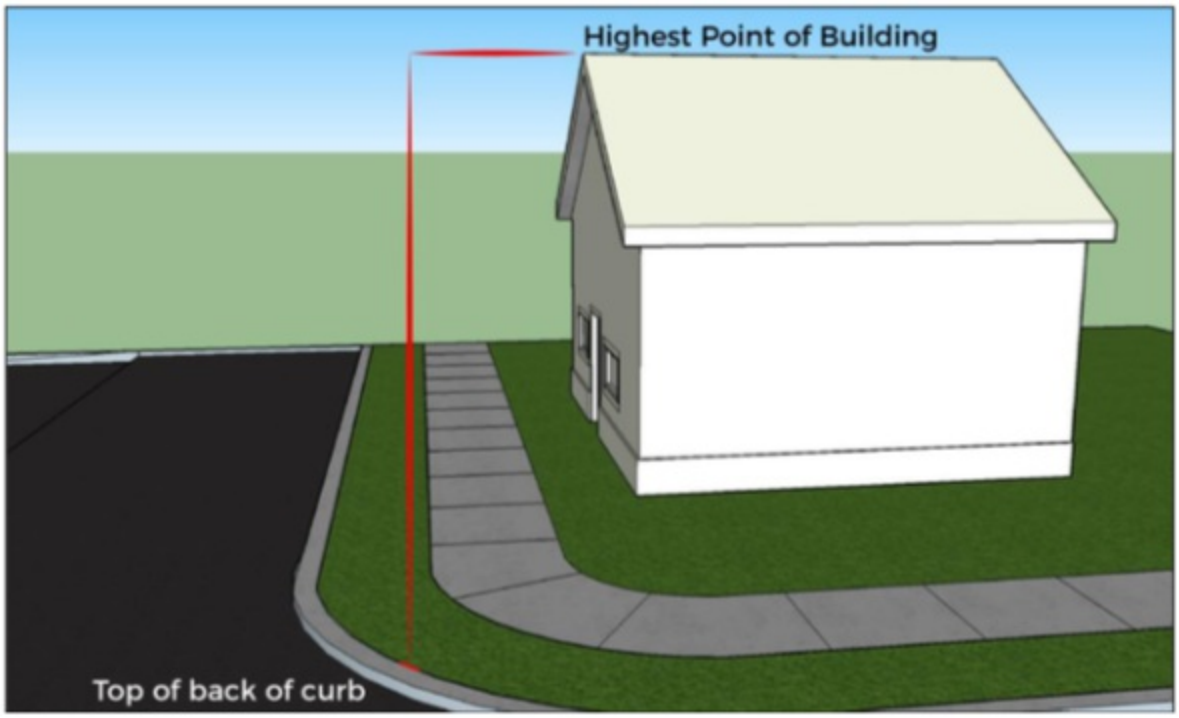

Building Line: The line circumscribing the buildable area of a lot.

Building Line, Front: A line parallel to the front lot line and at a distance there from equal to the required depth of the front yard setback and extending across the entire width of the lot or parcel.

Building Line, Rear: A line parallel to the rear lot line and at a distance there from equal to the required depth of the rear yard setback and extending across the entire width of the lot or parcel.

Building Line, Side: A line parallel to the side lot line and at a distance there from equal to the required depth of the side yard setback and extending between the front and rear building lines.

Building Official: The person charged with the administration and enforcement of the Building Code of the City of Vineyard, or designee.

Building Permit: A Permit authorizing a construction activity.

Business: Means and includes all trades, occupations, professions, or activities carried on within the city for the purpose of gain or economic profit.

Carport: Roof structures open on at least two sides and subject to all requirements prescribed for a garage.

Car Wash: A facility that offers the washing of motor vehicles and motorcycles by either machine or hand-operated mechanisms used principally for the cleaning, washing, polishing, or waxing of motor vehicles not exceeding 10,000 pounds Gross Vehicle Weight. A facility of this type may be able to accommodate more than one vehicle at the same time.

Certificate of Occupancy: A certificate issued by the Building Official authorizing occupancy of a building or structure requiring a Building Permit.

Chemical Manufacturing, Storage, and Distribution (Existing): A use, existing and established in the Town on January 1, 2008 and engaged in making of chemical products from raw or partially finished materials and the storage and distribution of such chemical materials and that by reason of materials, processes, products or waste may be hazardous or that by the emission of odor, dust, smoke, gases, noise, vibration, glare, heat or other impacts may impact adjoining properties, and which may include the parking and storage of distribution vehicles, and accessory activities.

Chief Executive Officer: Means the Mayor of the City of Vineyard. City Engineer: A registered Civil Engineer so appointed by the city.

Clear View Area: Areas at intersecting streets and driveways where unobstructed vision is maintained, as required by this Ordinance.

Clinical Support Housing: Residential housing whose occupancy is restricted to persons who are registered or employed as a patient, student, or staff member associated with the clinical or educational program of the facility or campus in which the housing unit or dormitory is located.

Cluster Development: A design that locates buildings in specific areas of a site to allow the remaining land to be used, but not limited to, recreation, open space, and preservation of sensitive land areas.

Code: The City of Vineyard Municipal Code, as adopted.

Colony: Bees in any hive including queens, workers, or drones.

Commercial Kennel: An establishment where four (4) or more dogs, older than four (4) months, are kept for the purpose of boarding, breeding, raising or training dogs for a fee or on a nonprofit basis.

Commercial Plant Nursery: A use wholly, or partially, contained within one or more greenhouses where trees, shrubs, flowers, or vegetable plants are grown and sold to retail or wholesale customers.

Commercial Recreation, Indoor: A use, either public or private, providing amusement, pleasure, or sport, which is operated entirely within an enclosed building, including but not limited to live theater, and movie houses, indoor tennis, bowling, and skating, baseball batting cages, paintball, horse riding or similar activities. This use may include associated eating and drinking areas, retail sales areas and staff offices.

Commercial Recreation, Outdoor: An area or facility that offers entertainment or recreation outside. This use is limited to a golf driving range, baseball batting cages, riding arena, tennis facility, miniature golf, and swimming pool, and may include, as accessory uses, associated eating and drinking areas, retail sales areas and staff offices. This use specifically excludes shooting range, go-cart, motor vehicle and/or motorbike tracks, or similar activities that may create noise, dust, or other nuisances to adjoining and surrounding uses.

Commission: The Planning Commission of the City of Vineyard.

Common Area: Facilities and yards under common ownership.

Common Ownership: Ownership of the same property by different persons.

Commuter and Light Rail Facilities and Station: A rail transit system that covers long distances, usually with less frequent station spacing and train times than light rail that runs on a separate right-of-way from cars, and often sharing an existing freight corridor. Light rail transit systems can run along city streets or in a separate right-of-way. Station areas are located along the transit lines to link park-and-ride lots with the transit system.

Composting Facility: A facility where organic materials are converted into a humus-like material under a process of managed biological decomposition or mechanical processes. Normal backyard composting and composting incidental to agricultural operations are exempted from this use classification.

Conditional Use: A land use that, because of its unique characteristics or potential impact on the municipality, surrounding neighbors, or adjacent land uses, may not be compatible in some areas, or may be compatible only if certain conditions are required that mitigate or eliminate the detrimental impacts.

Constitutional Taking: A governmental action that results in a taking of private property so that compensation to the owner of the property is required by the:

1. Fifth or Fourteenth Amendment of the Constitution of the United States; or
2. Utah Constitution Article I, Section 22.

Construction: The materials, architecture, assembly, and installation of a building or structure.

Construction Activity: All grading, excavation, construction, grubbing, or other site preparation or development activity which disturbs or changes the natural vegetation, grade, or any existing building or structure, or the act of adding an addition to an existing building or structure, or the erection of a new primary or accessory building or structure on a lot or parcel.

Construction Sales and Service: An establishment engaged in the retail or wholesale sale of materials and services used in the construction of buildings or other structures. Typical uses include lumberyards, home improvement centers, lawn and garden supply stores, electrical, plumbing, air conditioning and heating supply stores.

Contractor's Office/Storage Yard: A facility providing building construction and maintenance services including carpentry, plumbing, roofing, electrical, air conditioning and heating, with a base of operations and which may include the indoor and outdoor storage of building materials, equipment, or vehicles used by the construction business.

Corral: A space, yard, or other unenclosed area, other than a building, used for the confinement of animals.

Council: The City Council of the City of Vineyard.

County: The unincorporated area of Utah County, or the Board of County Commissioners of Utah, Utah.

Cul-de-sac: A street with only one (1) outlet and an area for the safe and convenient turning around of traffic.

Culinary Water Authority: The department, agency, or public entity with responsibility to review and approve the feasibility of the culinary water system and sources for the subject property.

Cut: The process of lowering the natural grade of the ground, or the depth or the volume of such material removal.

Daycare Facility, Commercial: A facility, operated by a person qualified and licensed by the State of Utah, which provides children with day care and/or preschool instruction as a commercial business and complying with all applicable State standards and licensing and having regularly scheduled, ongoing enrollment for direct or indirect compensation that provides child care for less than twenty-four (24) hours per day. Commercial Daycare Facilities excludes the following:

1. Kindergartens or nursery schools or other daytime programs operated by public or private elementary or secondary schools or institutions of higher learning;
2. Facilities operated in connection with a fitness center, shopping center or other activity where children are cared for temporarily while parents or custodians of the children are occupied on the premises or are in the immediate vicinity and readily available;
3. Special activities or programs, including athletics, crafts instruction and similar activities, conducted on a periodic basis by civic, charitable, private, or governmental organizations; or
4. Clearly identified as an Accessory Use.

Decibel (dB): A unit of measure used to express intensity of noise.

Declaration: The legal instrument by which property is subjected to the provisions of the State of Utah Condominium Ownership Act, or a declaration of covenants, conditions, and restrictions.

Dedication: The setting aside of land by an owner for any public use for the enjoyment of the public and owned by a public agency.

Demolish or **Demolition**: Any act or process that destroys in part or in whole a building or structure.

Density: The intensity or number of nonresidential and residential uses expressed in terms of unit equivalents per acre or lot or units per acre.

Density, Base: The number of dwelling units per acre allowed by a Zoning District.

Density, Incentive: The number of additional dwelling units per acre allowed in addition to the base density.

Developer: Any person or organization that develops, or intends to develop or sell property for the purpose of future development subject to the provisions of this Ordinance, or other Land Use Ordinances.

Development Activity: Any of the following: (a) Any man-made change to improved or unimproved lands, including but not limited to buildings or structures, mining, dredging, filling, grading, paving, excavation or drilling operations; (b) Any construction, reconstruction, or expansion of a building, structure, or use; (c) Any change in the use of a building or structure; (d) Any change in the use of land that creates additional demand and need for public facilities or services; (e) The act of subdividing; or (f) The act, process or result of developing.

Development Agreement: A contract between an Applicant or owner and the Council pursuant to the provisions in this Ordinance.

Development Site: The perimeters and total area of a tract, lot, or parcel of land intended to be used for a development activity.

Development Standards: Established regulations concerning lot areas, yard setbacks, building height, lot coverage, open space and any other special regulations deemed necessary to accomplish the purpose of this Ordinance or other Land Use Ordinances.

Disability: Disability means a physical or mental impairment that substantially limits one or more of a person's major life activities, including a person having a record of such impairment or being regarded as having such impairment. (§ 57-21-2(9)(a) U.C.A., 1953, as amended). Disability does not include current illegal use of, or addiction to any Federally controlled substance, as defined in Section 102 of the Controlled Substances Act, 21 U.S.C. 802. (§ 57-21-2(9)(b) U.C.A., 1953, as amended). Disability does not include placement in lieu of confinement, rehabilitation, or treatment in a correctional facility.

Distribution Center: A facility where the storage and distribution of goods and materials occurs inside a fully enclosed building and which may include the parking and storage of distribution vehicles, and accessory activities.

Domestic Livestock and Fowl: Limited to domesticated horse (Equus caballus), domesticated cattle (Bos taurus and Bos indica), domesticated sheep (Ovis aries), domesticated goat (Capra hircus) and domestic fowl. Domestic Livestock and Fowl do not include inherently or potentially dangerous animals, fowl, reptiles, or exotic animals.

Driveway: A private access, the use of which is limited to persons residing, employed, or otherwise using or visiting the parcel on which it is located.

Drive-Through Facility: A facility which by design, physical facilities, service or packaging procedures, encourages or permits customers to transact business or receive services or goods while remaining in their motor vehicles.

Dwelling, Accessory Unit: An attached dwelling unit to a single-family home, or located above a detached garage serving a single-family home which is located on the same lot as the single-family home designed to be clearly subordinate to the principle dwelling. An accessory dwelling unit provides complete, independent living facilities with a separate dwelling entrance than the principle dwelling.

Dwelling, Accessory Unit for Owner or Employee: An attached, or detached, dwelling unit for an employee or owner and incidental and clearly subordinate to the existing primary building or use and located on the same lot as the primary building or use.

Dwelling, Condominium: An individually owned dwelling unit, the ownership of which includes an undivided interest in the land and other common areas and facilities, as provided and recorded in a property deed or other instrument, as required by Utah law, and which is typically maintained by an association of the owners. Must meet allowed density requirements.

Dwelling, Multiple-Family: A building containing three (3) or more dwelling units.

Dwelling, Single-Family: A building containing one (1) dwelling unit.

Dwelling, Two-Family: A building containing two (2) attached dwelling units.

Dwelling Unit: A building, occupied by no more than one (1) family as defined herein, containing one (1) or more rooms and one (1) kitchen and including areas for living and sleeping, designed to be used for human occupancy, and complying with all provisions of the Building Code.

Dwelling Unit, Manufactured: A transportable factory built housing unit constructed on or after June 15, 1976, according to the Federal Home Construction and Safety Standards Act of 1974 (HUD Code), in one or more Sections, which, in the traveling mode, is eight (8) feet or more in width or forty (40) feet or more in length, or when erected on site, is four hundred (400) or more square feet, and which is built on a permanent chassis and is designed to be used as a dwelling unit with, or without a permanent foundation, when connected to the required utilities, and includes the plumbing, heating, air-conditioning, and electrical systems.

To meet the requirements of this Ordinance and State laws, when erected on the site the home must be at least 24 feet in width at the narrowest dimension, have exterior and roofing materials acceptable to the Building Code, as adopted by the City of Vineyard, have a minimum roof pitch of 2:12, and be located on a permanent foundation, in accordance with plans providing for vertical loads, uplift, and lateral forces and frost protection in compliance with the Building Code. All appendages, including carports, garages, storage buildings, additions, or alterations must be built in compliance with the Building Code. The manufactured dwelling must be connected to the required utilities, including plumbing, heating, air-conditioning, and electrical systems. All manufactured dwelling units constructed on or after June 15, 1976, shall be identifiable by the manufacturer's data plate bearing the date the unit was manufactured and a HUD label attached to the exterior of the home certifying the home was manufactured to HUD standards. A Manufactured Dwelling Unit shall be identified as real property on the property assessment rolls of Utah County.

Earth Station: A communication facility which transmits and/or receives signals to and from an orbiting satellite using satellite dish antennas.

Easement: That portion of a lot, parcel, or tract reserved for present or future use by a person or agency other than the fee owner(s) of the property. The easement may be for use under, on, or above said lot, parcel, or tract.

Educational Facility: Public schools, colleges or universities qualified by the State of Utah Board of Regents or State of Utah Board of Education to provide academic instruction. Privately owned buildings and uses for educational activities that has a curriculum for technical or vocational training, kindergarten, elementary, secondary or higher education.

Elderly Person: A person who is 60 years old or older, who desires or needs to live with other elderly persons in a group setting, but who is capable of living independently.

Emergency Care Facility: A facility or licensed healthcare provider providing emergency medical or dental or similar examination, diagnosis, treatment and care on an outpatient basis only.

Environmental Remediation: Removal and processing of on-site waste and/or contaminated materials for the purposes of remediation of the site for future use. All uses in this category are considered temporary for the duration of the remediation process and do not include importation of waste for processing. Such uses shall comply with the provisions for separation of uses and performance standards contained herein.

EPA: The United States Environmental Protection Agency.

Escrow: A deposit of cash with the city, or approved alternate in lieu of cash, held to ensure the performance of a task or a maintenance guarantee.

Excavation: The removal of boulders, gravel, rocks, earth, or similar naturally occurring deposits from its natural position.

External Illumination: Lighting that illuminates a building or structure, parking area, or other outside area from a location outside of the building or structure.

Family: A person living alone, or any of the following groups living together as a single housekeeping unit and sharing common living, sleeping, cooking and eating facilities: (a) Any number of people who are related by blood, marriage, adoption, or court sanctioned guardianship together with any incidental domestic or support staff who may or may not reside on the premises; or (b) four (4) unrelated people; or (c) two (2) unrelated people and any children related to either of them. "Family" does not include any group of individuals whose association is temporary or seasonal in nature or who are in a group living arrangement because of criminal offenses.

Farmer's Market: An area used for the sale of fresh produce and related food items, which may have outdoor storage and sales. A farmers' market may provide space for one or more vendors.

Fence: A barrier or obstruction of any material, with the purpose or intent, or having the effect, of preventing passage or view across the fence line.

Fence, Open: A fence which permits vision through more than fifty percent (50%) of each square foot more than eight (8) inches above the natural or finished grade.

Fence, Sight Obscuring: A fence which permits no vision (0%) through any part of the fence more than eight (8) inches above the natural or finished grade.

Fill: The process of raising the natural grade of the ground, or the depth or the volume of such material.

Financial Institution: A financial company or corporation providing the extension of credit, and the custody, loan or exchange of money; but not including Pawnshops.

Fiscal Impact Analysis: An analysis that describes the current or anticipated effect upon the public costs and revenues imposed by a development activity.

Flammable Liquids or Gases Manufacture, Storage and Distribution: A facility which may produce, store and/or distribute flammable liquids and gases and which may include the parking and storage of distribution vehicles, and accessory activities.

Flood or Flooding: A general and temporary condition of partial or complete inundation of normally dry land areas from:

1. The overflow of inland waters; including streams, creeks and rivers and/or
2. The unusual and rapid accumulation or runoff of surface waters from any source.

Flood Insurance Rate Map (FIRM): An official map of a community on which the United States Federal Emergency Management Agency has delineated areas of flood hazard.

Flood Insurance Study: The official report provided by the United States Federal Emergency Management Agency that include flood profiles, the Flood Boundary-Floodway Map, and the water surface elevation of the base flood.

Flood Plain, 100 Year: An area where a peak flow magnitude has about a 1 percent (1%) chance of being equaled, or exceeded in any year. The area is based on statistical analysis of stream flow records available for the watershed and analysis of rainfall and runoff characteristics in the general region of the watershed. The flood would have an average frequency of occurrence of about once in one hundred (100) years.

Floor Area, (Gross Floor Area): The sum of the footage contained within all buildings or structures on a site measured from the outside wall surfaces and including basements, garages, porches, utility rooms, stairways, recreation rooms and storage rooms, but excluding unroofed balconies and patios.

Floor Area, (Net Floor Area): The sum of the footage contained within all buildings or structures on a site measured from the inside wall surfaces including basements but excluding, garages, porches, utility rooms, stairways, storage rooms, and unroofed balconies and patios.

Floor Area, (Total): The sum of the gross floor area of all floors of a building and its accessory buildings located on the same lot. All dimensions shall be measured from the exterior faces of the exterior walls.

Floor Area Ratio: The total gross floor area of a building divided by the area of the lot on which it is located.

Foot Candle: A unit for measuring the amount of illumination on a surface.

Frontage: All the property fronting on one (1) side of the street between intersecting or intercepting streets, measured along the street line.

Funeral Home: An establishment where the dead are prepared for burial or cremation and which may include areas for embalming, performing of autopsies and the storage of funeral supplies and vehicles and where funerals may be held.

Garage: An accessory building used for the storage of motor vehicles.

General Plan: The City of Vineyard General Plan, as adopted.

Geologic Hazard: A hazard inherent in the crust of the earth, or artificially created, which is dangerous, or potentially dangerous to life, property or improvements, due to the movement, subsidence, or shifting of the earth. The term includes, but is not limited to, unstable slopes, faulting, landslides, and rock falls.

Golf Course: An area used for the purposes of playing golf, but which may include associated restaurants, commercial retail sales areas, and course maintenance facilities.

Grade, Finished: The finished elevation of the surface of the land after the completion of any development activity or other excavation.

Grade, Natural: The elevation of the surface of the land prior to any development activity or excavation.

Grading: An excavation, cut or fill, or the act of excavating, either cutting or filling.

Groundwater: Any water that may be drawn from the ground.

Groundwater Discharge Area: An area where the direction of groundwater movement is upward from the principal aquifer to the shallow unconfined aquifer.

Grubbing: The removal or destruction of vegetation, including disturbance to the root system or soil surface by mechanical, chemical, or other means.

Guarantee: Any form of security including cash, a letter of credit, or an escrow agreement in an amount and form satisfactory to the city.

Hard-Surfaced: Covered with concrete, brick, asphalt, or other impervious material.

Hazardous Waste: A material as defined by the United States Environmental Protection Agency.

Health and Fitness Facility: A business or membership organization providing exercise facilities and/or nonmedical personal services to patrons, including, but not limited to, gymnasiums, private clubs (athletic, health, or recreational), tanning salons, and weight control establishments.

Health Department: The Utah County Health Department.

Heliport: An area used for the landing and taking off of rotary wing aircraft but not including the regular repair or maintenance of such aircraft or the sale of goods or materials to users of such aircraft.

Hive: A frame hive, box hive, barrel, log, gum skep, or other artificial or natural receptacle that may be used to house bees.

Holiday Decorations: Displays of a primarily decorative nature commonly associated with any national, Local, or religious holiday.

Home Day Care: The care of children who are family and non-family members in an occupied dwelling unit, and complying with all State standards and licensing, by a resident of the dwelling unit at least twice a week for more than three (3) children, but fewer than ten (10) children. The total number of children being cared for shall include children under the age of four (4) years residing in the dwelling unit, who are under the supervision of the provider during the period of time the childcare is provided. When a caregiver cares for only three (3) children under age two (2), the group size, at any given time shall not exceed six (6). If there are eight or more children, there must be two or more providers present.

Home Occupation: An activity carried out for gain by a resident of the dwelling unit, identified, and conducted in compliance with the requirements of this Ordinance, as applicable.

Home Preschool: A preschool program complying with all State standards and licensing for non-family members in an occupied dwelling unit, by residents of that dwelling unit, in which lessons are provided for not more than ten (10) children for each session of instruction. If there are eight or more children, there must be two or more providers present. Sessions shall last for not more than four (4) hours and shall not overlap. Individual children may attend only one (1) preschool session in any 24-hour period.

Honeybee: The common honeybee, Apis mellifera species or any hybrid thereof, at any stage of development, but not including the African honeybee.

Hospital: A facility licensed by the State of Utah Department of Health providing health services primarily for human inpatient, medical and/or surgical care for the sick or injured, and including the related facilities such as laboratories, outpatient departments, training facilities, central service facilities, and staff offices which are an integral part of the facilities.

Hotel: A building and associated facilities offering overnight accommodations for guests, with access provided through a common entrance, lobby or hallway to individual guestrooms, and which may include additional services, such as restaurants, conference and meeting rooms, entertainment, and recreational facilities.

Household Pets, Noncommercial: Domesticated animals and birds ordinarily allowed in a dwelling unit and kept for company or pleasure of the owner, including, but not limited to dogs, cats, and caged birds. Household Pets do not include domestic livestock or fowl, as defined herein or inherently or potentially dangerous animals, fowl, reptiles, or exotic animals.

Hybrid Production Facility: A commercial operation or use, on one or more premises where finished consumer goods are manufactured or produced and those same goods are offered for sale to the general public. Hybrid production facilities must be similar in size, scale and scope of operation with adjacent or nearby uses.

Identical Plans: Means building plans submitted to the City of Vineyard that are substantially identical to building plans that were previously submitted to and reviewed and approved by the City of Vineyard Building Official and describe a building that is:

1. Located on land zoned the same as the land on which the building described in the previously approved plans is located; and
2. Subject to the same geological and meteorological conditions and the same law as the building described in the previously approved plans.

Illegal Building/Structure: A building or structure, or portion thereof, established without securing the necessary Approvals, Permits, or Licenses, as required by this Ordinance, the adopted Building Code, or their prior enactments.

Illegal Lot: A lot created that has not received the necessary Approvals, Permits, or Licenses, as required by the city's Land Use Ordinances.

Illegal Use: A use established without receiving the necessary Approvals, Permits, or Licenses, as required by the city's Land Use Ordinances.

Impact Analysis: A determination of the potential effect(s), including but not limited to environmental, fiscal, social, matters, etc. upon the city or a Section of the city.

Impervious Material or Surface: Material that is impenetrable by water.

Improvements: Curbs, gutters, streets, roads, sidewalks, utilities, grading, paving, landscaping, water and sewer systems, drainage systems, fences, fire hydrants, street lights, parks, public facilities, amenities and other such requirements of this Ordinance.

Intensity: The degree of a quantitative or qualitative measurement associated with a use of land or building.

Internal Illumination: Lighting by means of a light source that is located within a building structure, or other object including a sign, or portions or letters of a sign.

Kennel, Commercial: A facility providing for indoor commercial boarding, grooming or training of household pets not owned by the owner or occupant of the premises.

Kennel, Outdoor Commercial: A facility providing for the indoor and/or outdoor commercial boarding, grooming or training of household pets not owned by the owner or occupant of the premises.

Land Use: The manner in which land is occupied or used.

Land Use Application: All Applications required by this Ordinance, and the city's other Land Use Ordinances, and required to initiate the review procedures for any required Approval, License, or Permit by a Land Use Authority.

Land Use Approval: Any authorization received from a Land Use Authority that permits the commencement of a development activity.

Land Use Authority: Means a person, board, commission, agency, or other body designated by the Council to act on a Land Use Application.

Land Use Ordinance: Means a planning, Zoning, development, or subdivision Ordinance of the City of Vineyard, including this Ordinance, but does not include the City of Vineyard General Plan.

Landscaping: Materials and treatments that include naturally growing elements such as grass, trees, shrubs, and flowers. Landscaping may also include the use of rocks, fountains, benches, and contouring of the earth when authorized by a Land Use Authority.

Laundry, Commercial: An establishment primarily engaged in the provision of laundering, dry cleaning, or dyeing services other than retail services establishments. Typical uses include bulk laundry and cleaning plants, diaper services, and linen supply services.

Laundry, Self Service or Dry Cleaning: An establishment providing home-type washing, drying, and/or ironing machines, household laundry and dry-cleaning services.

Legal Building/Structure: A building or structure, or portion thereof, established after receiving the necessary Approvals, Permits, or Licenses, as required by the Land Use Ordinances and complying with the requirements of the Land Use Ordinances and Building Code.

Liquor Store: An establishment owned and operated by the State of Utah and primarily engaged in the sale of alcoholic beverages.

Lot, Legal: A lot that has received the necessary Approvals, Permits, or Licenses, as required by the city's Land Use Ordinances, or their prior enactments.

Legal Lot of Record: Any lot, parcel or tract of land that existed, as recorded in the Office of the Utah County Recorder, with a separate property identification number as provided by the Office of the Utah County Recorder and Office of the Utah County Assessor, prior to the date of the adoption of the first Vineyard Subdivision Ordinance, and all lots, parcels, and tracts of land that were legally created pursuant to the subdivision requirements of the city's Land Use Ordinances and the laws of the State of Utah after the date of the adoption of the first City of Vineyard Subdivision Ordinance.

Legal Use: A use complying with the requirements of this Ordinance.

Legislative Body: The City Council of Vineyard, Utah.

Light Source: A point of lumination that emits a measurable radiant energy in or near the visible spectrum.

Limits of Disturbance: The area of a lot, parcel, or tract of land in which all development activity or construction must be contained including all impervious surfaces, buildings, structures, parking areas, driveways, etc.

Lot: A parcel of land occupied or proposed to be occupied by a building or structure, together with such yards, open spaces, lot width and lot area as are required by this Ordinance.

Lot Area: The total land area of a lot, parcel, or tract of land.

Lot Coverage: The total horizontal area of a lot, parcel, or tract of land covered by any impervious surface, including buildings, structures, parking areas, driveways, etc.

Lot Depth: The horizontal distance from a front lot line to a rear lot line.

Lot, Interior: A lot, parcel, or tract of land, other than a corner lot.

Lot, Irregular: A lot whose rear property line is not generally parallel to the front property line such as a pie-shaped lot on a cul-de-sac, or where the side property lines are not parallel to each other.

Lot Line: A line bounding a lot, parcel, or tract of land that divides one (1) lot, parcel, or tract from another, or from a street. See also Property Line.

Lot Line Adjustment: The relocation of the lot line or property boundary line in a subdivision between two adjoining lots with the consent and agreement of the owners of record.

Lot Line, Front: A lot line separating a lot from an existing street right-of-way or, where a new street is proposed, the proposed street right-of-way line.

Lot Line, Rear: The lot line generally opposite and most distant from the front lot line.

Lot Line, Side: Any lot line that is not a front lot line or rear lot line. A side lot line separating one (1) lot from another is an interior side lot line.

Lot, Corner: A lot abutting on two (2) intersecting streets where the interior angle of intersection or interception does not exceed one hundred thirty-five degrees (135°).

Lot, Double Frontage: A lot abutting two (2) parallel or approximately parallel streets.

Lot, Illegal: A lot that has not received the necessary Approvals, Permits, or Licenses, as required by the city's Land Use Ordinances and State laws, or their prior enactments.

Lot, Noncomplying (Legal): A lot, parcel or tract of land that: (a) Legally existed before its current Zoning designation; and (b) Has been shown as a separate lot, parcel, or tract continuously on the records of the Utah County Recorder as an independent parcel since the time the Zoning requirements governing the lot, parcel or tract changed; and (c) Because of subsequent Zoning changes does not now conform with the requirements of the Zoning District in which the lot, parcel or tract is located.

Lot, Noncomplying (Illegal): A lot, parcel or tract of land that: (a) Was created without receiving the necessary Approvals, Permits, or Licenses, as required by the city's Land Use Ordinances and State laws, and their prior enactments, and (b) Does not conform with the requirements of the Zoning District in which the lot, parcel or tract is located.

Lot Width: For an interior lot or parcel, the shorter of horizontal distance between side lot lines, measured at the required front yard setback line or rear setback line. For a corner lot, the distance between one (1) of the front lot lines and the opposite side yard line at the required setback line.

LUDMA: Means the "Municipal Land Use, Development, and Management Act," as provided by Chapter 10-9a, U.C.A., 1953, as amended.

Lumen: A measurement of light output or the amount of light emitting from a luminaire. Luminaire: A lighting unit consisting of a light source and all necessary mechanical, electrical, decorative, light shielding and hooded parts.

Luminaire, Cutoff-Type: A luminaire with shields, reflectors, refractors, or other such elements that direct and cut-off emitted light.

Luminaire, Shielded, Fully: Luminaires that are constructed so that no light rays are emitted at angles above the horizontal plane, as certified by a photometric test report.

Luminaire, Shielded, Partially: Luminaires that are constructed so that no more than ten percent (10%) of the light rays are emitted at angles above the horizontal plane, as certified by a photometric test report.

Manufacturing, Heavy: The assembly, fabrication or processing of large or bulky goods and materials which typically require extensive building areas or land areas using raw materials or previously prepared materials, using processes and that may have impacts on the use and enjoyment of adjacent property in terms of noise, smoke, fumes, odors, glare, or health and safety hazards.

Manufacturing, Light: The assembly, fabrication or processing of goods and materials using processes that are not offensive or create any odor, dust, smoke, noxious gases, noise, vibration, glare, heat or other impacts to adjacent property, nor create any health and safety hazards by way of materials, process, product or waste, and where all assembly, storage, fabrication or processing is conducted within a building or structure and where all, equipment, compressors, generators and other ancillary equipment is located within a building or structure.

Medical Clinic: An organization of doctors, dentists, or other health care professional providing physical or mental health service and medical or surgical care of the sick or injured but which does not include in-patient or overnight accommodations.

Medical Laboratory: An establishment that conducts basic medical or dental research and analysis. This term does not include a facility providing any type of in-house patient services typically provided by hospitals and clinics.

Mixed Use: The location and arrangement of a combination of compatible residential and nonresidential uses on the same lot or within the same building, and complying with the requirements of this Ordinance.

Model Home: A dwelling unit having all of the following characteristics:

1. The dwelling unit is constructed upon a lot in a subdivision for which a Final Plat has been recorded.
2. The dwelling unit is intended to be temporarily utilized as an example of the dwelling units that are proposed to be built in the same subdivision.

Moderate Income Housing: Housing occupied or reserved for occupancy by households with a gross household income equal to or less than eighty percent (80%) of the median gross income for households of the same size in Utah County.

Moderate Income Housing Plan: A written document conforming to the requirements of LUDMA.

Monument: A permanent survey marker established by the Utah County Surveyor and/or a survey marker set in accordance with the City Engineer's specifications and referenced to Utah County survey monuments.

Motel: A building or group of buildings containing guest rooms, some or all of which have a separate entrance leading directly from the outside of the building with a garage or parking space located on the same lot and designed, used or intended wholly or in part for the overnight accommodations of guests and their vehicles.

Motor Home: A unit primarily designed as a temporary dwelling for recreational and vacation use, which is either self-propelled or is mounted on or pulled by another vehicle, including, but not limited to, a travel trailer, a camping trailer, a truck camper, a motor home, a fifth wheel trailer, and a caravan.

Motor Vehicle Fueling Station: A facility providing the retail sale and direct delivery to motor vehicles of fuel, including electric charging stations, lubricants and minor accessories, and retail sales for the convenience of the motoring public.

Municipality: The City of Vineyard, Utah, or other incorporated area.

Museum: An institution for the acquisition, preservation, study and exhibition of works of artistic, historical or scientific value and for which any sales relating to such exhibits are incidental and accessory to the exhibits presented.

Natural Features: Non-man-made land characteristics, including but not limited to slopes, wetlands, streams, rock outcropping, lava fields, intermittent drainage channels, and vegetation.

Natural State: Land that has not been subjected to grading, removal of vegetation or any development activity.

Natural Vegetation: Vegetation existing on a lot or parcel prior to any grading, development activity or man-made plantings.

Natural Waterways: Those areas, varying in width, along the course of a permanent or intermittent river, stream, creek, or gully.

Nominal Fee: A fee that reasonably reimburses the city only for time spent and expenses incurred in:

1. Verifying that building plans are identical plans; and
2. Reviewing and approving those minor aspects of identical plans that differ from the previously reviewed and approved building plans.

Noncombustible Material: Any material that will not ignite at or below a temperature of one thousand two hundred degrees Fahrenheit (1,200°F) during an exposure of five (5) minutes, and will not continue to burn or glow at that temperature.

Noncomplying Structure: A structure that:

1. Legally existed before its current land use designation; and
2. Because of one or more subsequent land use Ordinance changes, does not conform to the setback, height restrictions, or other regulations, excluding those regulations, which govern the use of land.

Nonconforming Use: A use of land that:

1. Legally existed before its current land use designation;
2. Has been maintained continuously since the time the land use Ordinance governing the land changed; and
3. Because of one or more subsequent Land Use Ordinance changes, does not conform to the regulations that now govern the use of the land.

Nonresidential Uses: Means the uses identified in the Tables of Uses – Nonresidential Zoning Districts.

Nonresidential Zoning District/Nonresidential Zones: Means the Commercial Districts and Industrial Districts.

Nursing Care Facility: A healthcare facility, other than a hospital, constructed, licensed and operated to provide patient living accommodations, twenty-four (24) hour staff availability, and at least two (2) of the following patient services:

1. a selection of patient care services, under the direction and supervision of a registered nurse, ranging from continuous medical, skilled nursing, psychological or other professional therapies to intermittent health related or paraprofessional personal care services;
2. a structured, supportive social living environment based on a professionally designed and supervised treatment plan, oriented to the individual's habilitation or rehabilitation needs; or
3. a supervised living environment that provides support, training or assistance with individual activities of daily living.

Nursing Home, Convalescent Care Center: A facility that provides 24-hour residential care to persons who are not related by blood, marriage, or adoption to the owner, operator, or manager of the facility. A Nursing Home or Convalescent Care Center provides some level of skilled nursing or medical service to the residents.

Office: A type of business use where a building, room, or other space and where executive, management, administrative or professional services are provided, except medical services, and excluding the sale of merchandise, except as incidental to a principal use. Typical uses include real estate brokers, insurance agencies, investment firms, employment agencies, travel agencies, advertising agencies, secretarial services, data processing, professional or consulting services in the fields of law, architecture, design, engineering, accounting and similar professions; interior decorating consulting services; and business offices of private companies, utility companies, trade associations, unions and nonprofit organizations.

Official Map: A map adopted by the Council and recorded in the Utah County Recorder's Office that:

1. Shows actual and proposed rights-of-way, centerline alignments, and setbacks for highways and other transportation facilities;
2. Provides a basis for restricting development in designated rights-of-way or between designated setbacks to allow the government authorities time to purchase or otherwise reserve the land; and
3. Has been adopted as an element of the City of Vineyard General Plan.

Official Zoning Map/Zoning Districts Map: The map adopted by the Council showing the geographic location of Zoning Districts.

Off-Street: Entirely outside of any city right-of-way, street, access easement, or any private access drives.

Open Space: Land areas that are not occupied by buildings, structures, parking areas, streets, or roads. Open space may be devoted to landscaping, preservation of natural features, and recreational areas and facilities.

Outdoor Display of Products or Merchandise: The storage of goods or product in an open, unenclosed area, including but not limited to, automotive, truck, recreational vehicle, trailer, and manufactured home sales lots, repair yards, open storage areas, and all similar outside display and storage areas of goods, materials, equipment, and vehicles.

Overlay District: A Zoning District, with its accompanying requirements, that is applied to an area that may place additional development standards on a Zoning District. Development in an overlay District must conform to the base District as well as the overlay Zoning requirements.

Owner: Any person who alone, jointly or severally with others, has a legal or equitable title to property.

Parcel of Land: An area of land, with a separate property identification number, as provided by the Office of the Utah County Recorder.

Park: A playground, or other area or open space providing opportunities for active or passive recreational or leisure activities.

Park and Ride Facility: A parking area and transit facility, the purpose of which is to allow the parking of motor vehicles with a connection to mass transit service.

Park Strip: The area located between the edge of asphalt or curb and the sidewalk, trail, or property line.

Parking Area/Parking Lot: An enclosed or unenclosed area, other than a street, and used or designed for the parking of four (4) or more vehicles.

Parking Space: An enclosed or unenclosed area used for parking or storage of one (1) automobile.

Pawnshop: Any person or establishment engaged in any of the following:

1. Lending money on deposit of personal property;
2. Dealing in the purchase, exchange, or possession of personal property on condition of selling the same back again to the pledger or depositor;
3. Lending or advancing of money on personal property by taking chattel mortgage security thereon and taking or receiving possession of such personal property; or
4. Selling unredeemed pledged personal property together with such new merchandise as will facilitate the sale of such property.

Permitted Use: For the purposes of this Ordinance shall include P-1 and P-2 Uses.

Personal Care Service: An establishment primarily engaged in the provision of frequently or recurrently needed services of a personal nature. Typical uses include beauty and barbershops, custom tailoring and seamstress shops, electrolysis studios, portrait studios, shoe repair shops, tailors, tanning and nail salons, and weight loss centers. The term excludes "Tattoo Establishment."

Person: An individual, corporation, partnership, organization, association, trust, governmental agency, or any other legal entity.

Pervious Material or Surface: Material that is penetrable by water.

Planning Commission: The Planning Commission of the City of Vineyard, Utah.

Plat: A map or other graphical representation of lands being laid out and prepared in accordance with LUDMA.

Plat, Final: A drawing prepared in accordance with the Land Use Ordinances showing the final design of a land division and complying with all standards and requirements of best surveying practice and in a form required by the Utah County Recorder's Office for recordation.

Plat, Preliminary: A drawing prepared in accordance with the Land Use Ordinances showing the design of a proposed land division.

Power Plant: An electrical energy generating facility with generating capacity of more than 50 megawatts and any appurtenant and associated facilities.

Primary Building: The principal building located on a lot, parcel, or tract of land and designed or used to accommodate the primary use.

Primary Use: The principal purpose for which a lot, parcel, tract, or building is designed, arranged or intended, or for which it is occupied or maintained.

Private Club: Any nonprofit corporation operating as a social club, recreational, fraternal or athletic association, or kindred association organized primarily for the benefit of its stockholders or members. A Private Club that serves liquor shall maintain compliance with all applicable state laws.

Private Drive: A non-dedicated thoroughfare used exclusively for private access to a lot, parcel, or tract of land.

Property: Any lot, parcel, or tract of land, including improvements thereon, and recorded as real property in the Office of the Utah County Recorder.

Property Line: The boundary line of a lot, parcel, or tract.

Public: That which is under the ownership or control of the United States Government, Utah State or any subdivision thereof, Utah County, or the City of Vineyard (or any departments or agencies thereof).

Public Use: A use operated exclusively by a public body or quasi-public body, such use having the purpose of serving the public health, safety, or general welfare, and including streets, parks, recreational facilities, administrative and service facilities, and public utilities, and found to conform to the General Plan, as adopted. Public Uses and Utilities do not include "Major Facility of a Public Utility," as defined herein.

Public Hearing: A hearing at which citizens of the City and members of the public are provided a reasonable opportunity to comment on the subject of the hearing.

Public Improvement: Any street dedications, installations of curb, gutter, sidewalk, road base and asphalt, water, sewer, and storm drainage facilities, or other utility or service required to provide services to a lot, parcel, building, or structure.

Public Meeting: A meeting that is required to be open to the public under Title 52, Chapter 4, Open and Public Meetings.

Qualified Professional: A professionally trained person with the requisite academic degree, experience, and professional certification or License in the field or fields relating to the matter being studied or analyzed.

Quasi-Public Use: A use operated by a private nonprofit educational, religious, recreational, charitable, or philanthropic institution, serving the public.

Reasonable Accommodation: A change in a rule, policy, practice, or service necessary to afford a person equal opportunity to use and enjoy a dwelling. As used in this definition "Reasonable" means a requested accommodation will not undermine the legitimate purposes of existing Zoning regulations notwithstanding the benefit that the accommodation would provide to a person with a disability, "Necessary" means the Applicant must show that, but for the accommodation, one or more persons with a disability likely will be denied an equal opportunity to enjoy housing of their choice, "Equal Opportunity" means achieving equal results as between a person with a disability and a non-disabled person.

Record of Survey Map: A map of a survey of land prepared in accordance with the laws of the State of Utah.

Reception Hall, Reception Center: A facility for the holding of events including but not limited to weddings, wedding receptions, community meetings, and group gatherings.

Recreational and Manufactured Home Standard: A standard adopted by the American National Standards Institute or the national fire protection association for recreational vehicles, and for mobile homes manufactured prior to June 15, 1976. For manufactured homes built after June 16, 1976, "standard" means the standard adopted pursuant to the National Manufactured Housing Construction and Safety Standards Act, 1974, as amended.

Recreational Vehicle: A vehicular unit primarily designed for recreational and vacation use, which is either self-propelled or is mounted on or pulled by another vehicle, including but not limited to a travel trailer, a camping trailer, a truck camper, a motor home, boat, a fifth-wheel trailer and a caravan.

Recycling Collection Center: A use, often accessory in nature, providing designated containers for the collection, sorting and temporary storage of recoverable resources (such as paper, glass, metal and plastic products) to be transferred to a recycling processing facility. Recycling Collection Centers involve no more than 3 collection containers up to 40 cubic yards in total size. The operator of the collection center shall keep the collection center in proper repair and the exterior must have a neat and clean appearance.

Recycling Processing Facility: A facility where recyclable and organic materials are collected, stored and processed. Processing includes but is not limited to baling, briquetting, compacting, flattening, crushing, mechanical sorting, shredding, and cleaning. Recycling Processing Facility does not include Salvage Yard.

Residence: A dwelling unit or other place where an individual or family is living at a given point in time and not a place of temporary sojourn or transient visit.

Residence for Persons with a Disability that are Substance Abuse Facilities located within 500 feet of a School: A residence in which more than one (1) person with a disability resides; and is Licensed or certified by the Department of Human Services under Title 62A, Chapter 2, Licensure of Programs and Facilities; or is Licensed or certified by the Department of Health under Title 26, Chapter 21, Health Care Facility Licensing and Inspection Act. See definition of Disability.

Residential Activity: Any building, structure, or portion thereof that is designed for or used for residential purposes and any activity involving the use of occupancy of a lot or structure for residential purposes.

Residential Facility for Elderly Persons: A single-family or multiple-family dwelling unit that meets the requirements of LUDMA.

Residential Facility for Persons with a Disability: A residence in which more than one (1) person with a disability resides; and is Licensed or certified by the Department of Human Services under Title 62A, Chapter 2, Licensure of Programs and Facilities; or is Licensed or certified by the Department of Health under Title 26, Chapter 21, Health Care Facility Licensing and Inspection Act. See definition of Disability.

Residential Lease, Short Term: The use, occupancy, rent or lease, for direct or indirect compensation, of a structure or any portion thereof constructed for single family or multifamily occupancy or of any other residential property for an effective term of thirty (30) days or less.

Residential Uses: Means the uses identified in the Zoning District Use Matrix under the Residential category.

Restaurant: A building or facility for the preparation and retail sale of food and beverages.

Retail Sales and Services: Establishments engaged in the retail sale of goods and services, except those uses as otherwise clearly defined herein.

Retail Sales and Services (Community Commercial): Establishments engaged in the retail sale of goods and services. Community Commercial Retail Sales and Service businesses must conduct all sales of goods and services, with all associated storage of goods and materials, within a totally enclosed building (with the exception of occasional outdoor "sidewalk" promotions), with no separate individual building to exceed 3,000 square feet in total gross building and the total gross floor area of all buildings, on any separate, individual lot, does not exceed more than 6,000 square feet of gross building area.

Community Commercial Retail Sales and Services specifically excludes all sales, accessory uses, and service uses that typically display goods or services, or store goods or product in open, unenclosed areas, including but not limited to, automotive, truck, recreational vehicle, trailer, and manufactured home sales lots, repair yards, open storage areas, and all similar outside display and storage areas of goods, materials, equipment, and vehicles.

Retail Sales and Services (Regional): A commercial retail business that occupies more than 80,000 square feet of floor space, is a car or motor vehicle dealer, is a retail shopping facility (shopping center) that has at least one (1) anchor tenants if the total floor area of all tenants is more than 150,000 square feet, or is a grocery store of more than 30,000 square feet.

Revocation: A action by a Land Use Authority that has the effect to terminate any Approval, Permit, or License required by the city's Land Use Ordinances, including this Ordinance.

Right-of-Way: Any area provided for conveying vehicle and pedestrian traffic.

Roof Line: The highest point on any building or structure.

Salvage Yard: The use of any lot, portion of a lot, or land for the storage, keeping or abandonment of junk, including scrap metals or other scrap materials, or for the dismantling, demolition or abandonment of automobiles or other vehicles or machinery and/or the storage and sale of dismantled or damaged vehicles or their parts.

Sanitary Sewer Authority: The department, agency, or public entity with responsibility to review and approve the feasibility of sanitary sewer services or onsite wastewater systems.

Seasonal Use: A Seasonal Use shall not exceed ninety (90) days. Such uses include fireworks stands, fruit or vegetable stands, beverage or snow cone vendors, and Christmas tree lots.

Self-Service Storage: An enclosed commercial storage facility providing independent, fully enclosed bays, which are leased to persons exclusively for storage of their household goods or personal property.

Self-Storage, Mixed Use: A single building containing more than the primary land use of self-storage, or a single development of more than one building and use, where the different types of land uses are in close proximity, planned as a unified complementary whole, and functionally integrated to the use of shared vehicular and pedestrian access and parking areas. A mixed-use self-storage facility is intended to be used for a mix of uses between the primary use of a private noncommercial, non-industrial storage facility and general, professional office, medical or dental offices, retail or residential dwelling units' uses.

Sexual Oriented Business: A business which depicts, portrays, or describes "specified sexual activities" or "specified anatomical areas," or instruments, devices, or paraphernalia which are designated or used in connection with specified sexual activities, including but not limited to adult arcade, adult bookstore, adult novelty store, adult video store, adult cabaret, adult motel, adult motion picture theater, adult theater, or nude or seminude model studio.

Sign: A presentation or representation of words, letters, figures, designs, picture or colors, publicly displayed so as to give notice relative to a person, business, article or merchandise, service, assemblage, solicitation, or a request for aid; also, the structure or framework or a natural object on which any sign is erected or is intended to be erected or exhibited or which is being used or is intended to be used for sign purposes.

Sign, Illegal: Any sign which does not conform to the requirements of this Ordinance and was constructed or installed without the necessary Approvals, Permits, or Licenses required by this Ordinance, or prior enactments.

Sign, Legal: A sign that conforms to the requirements of this Ordinance and has received all necessary Approvals, Permits, or Licenses, as required by this Ordinance, or prior enactments.

Sign, Noncomplying: A sign or sign structure of portion thereof lawfully existing at the time this Ordinance became effective, but which does not conform to all applicable requirements now provided by this Ordinance.

Sign, Non-maintained: A sign which, due to lack of repair, cleaning, painting, oiling, or changing of light bulbs has become deteriorated, hazardous, or non-functional.

Sign, Off-Premise: Any sign, including a billboard or general outdoor advertising device, that advertises or directs attention to a business, commodity, service, activity, or matter conducted, sold, or offered at a location other than on the lot, parcel, or tract upon which such sign is located.

Sign, On-Premise: A sign that directs attention to a business, commodity, product, use, service or other activity that is sold, offered or conducted on the lot, parcel, or tract upon which such sign is located.

Site Plan: A schematic, scaled drawing of a lot, parcel, or tract which indicates, as may be required by this Ordinance, including but not limited to the placement and location of buildings, setbacks, yards, property lines, adjacent parcels, utilities, topography, waterways, irrigation, drainage, landscaping, parking areas, driveways, trash containers, streets, sidewalks, curbs, gutters, signs, lighting, fences and other features of existing or proposed use, activity, building or structure.

Slope: The level of inclination of land from the horizontal plane determined by dividing the horizontal run or distance, of the land into the vertical rise, or distance, of the same land and converting the resulting figure in a percentage value.

Special District: An entity established under the authority of Title 17A, Special Districts, U.C.A., 1953, as amended.

Specified Public Utility: Means an electrical corporation, gas corporation, or telephone corporation, as those terms are defined in Section 54-2-1, U.C.A., 1953, as amended.

Start of Construction: The issuance date of a Building Permit if construction, repair, reconstruction, placement, or other improvement begins within one hundred eighty (180) days of the Permit date. “Begins” means the date of the commencement of the first development activity on the site.

Story: The space within a building, included between the surface of any floor and the surface of the ceiling next above.

Street: A public right-of-way, including a highway, avenue, boulevard, parkway, road, lane, walk, alley, viaduct, tunnel, bridge, public easement, or other way.

Structural Alterations: Any change in supporting members of a building, such as bearing walls, columns, beams, or girders.

Structure: Anything constructed or erected, the use of which requires location on the ground, or attachment to something having location on the ground.

Subdivision: Means any land that is divided, resubdivided or proposed to be divided into two or more lots, parcels, sites, units, plots, or other division of land for the purpose, whether immediate or future, for offer, sale, lease, or development either on the installment plan or upon any and all other plans, terms, and conditions, and as further defined by LUDMA.

Subdivision Application: The Applications required by the City of Vineyard Subdivision Ordinance and required to initiate the review procedures for any required subdivision approval.

Substantial Action: Action taken in good faith to diligently pursue any matter necessary to obtain approval of an Application filed pursuant to the provisions of this Ordinance or to exercise development rights authorized pursuant to such an approval.

Swimming Pool: An artificial body of water having a depth in excess of eighteen inches, designed, constructed and used for swimming, dipping or immersion purposes by men, women or children, and located on a same lot or parcel as a dwelling, or dwellings.

Temporary Use: A use or event established for a maximum period of sixty (60) days, such use or event being discontinued after the expiration of sixty (60) days.

Tennis Court/Sports Court: An improved area used for the playing of tennis or other sports activities, including, but not limited to, basketball and volleyball, and located on a same lot or parcel as a dwelling, or dwellings.

Trailer/RV Camping Facilities: Any area or tract of land used or designed to accommodate two (2) or more travel trailers, recreational vehicles, motor homes or camping parties.

Travel Trailer: A vehicular, portable unit, mounted on wheels, not requiring special highway movement permits when drawn by a motorized vehicle:

1. Designed for travel, recreational and vacation use; and
2. When factory equipped for the road, having a body width of not more than eight feet (8') and a body length of not more than forty feet (40').

Unincorporated: Means the area of Utah County, Utah and located outside of the incorporated area of the City of Vineyard, or another municipality.

Use: The specific purpose for which land or a building is designed, arranged, intended, or for which it is or may be occupied or maintained.

USGS: The United States Geological Survey.

Utilities: Include, but are not limited to, natural gas, electric power, cable television, telephone, telecommunication services, storm system, sewer system, irrigation facilities, culinary water, street lights and other services deemed to be of a public-utility nature by the city.

Utility Easement: The area designated for access to construct or maintain utilities on a lot, parcel, or tract of land.

Utility, Public Major Facility: Any overhead or underground electric transmission lines (greater than 115,000 volts), substations of electric utilities; gas regulator stations, transmission and gathering pipelines and storage areas of utilities providing natural gas or petroleum derivatives; and their appurtenant facilities, water treatment plant, sewage treatment plant, or similar public or quasi-public use or activity.

Utility, Public Minor Facility: Any water, sewer power, gas, telephone, cable television, or other utility, distribution line, or facility, which is located underground and buried beneath the surface of the ground.

Variance: A modification granted by the Land Use Hearing Officer to a development standard with a finding of hardship.

Vehicle: A Licensed automobile, truck, trailer, boat or other device in which a person or thing is or can be transported from one (1) place to another.

Vehicle and Equipment Repair (Major): An establishment primarily engaged in the major repair or painting of motor vehicles or heavy equipment, including auto body repairs, installation of major accessories and transmission and engine rebuilding services. Typical uses include major automobile repair garages, farm equipment repair, paint, and body shops.

Vehicle and Equipment Repair (Minor): An establishment providing motor vehicle repair or maintenance services and conducted entirely within completely enclosed buildings, but not including paint and body shops or other activities associated with Vehicle and Equipment Repair (Major). Typical uses include businesses engaged in the following activities: electronic tune-ups, brake repairs (including drum turning), air conditioning repairs, generator and starter repairs, tire repairs, frontend alignments, battery recharging, lubrication, and sales, repair and installation of minor parts and accessories such as tires, batteries, windshield wipers, hoses, windows, etc. Vehicle and Equipment Repair (Minor) may include the retail sale of fuels, lubricants and other supplies for motor vehicles.

Vehicle and Equipment Sale and Rental: A facility providing for the sale, lease, or rental of new or used vehicles, including automobiles, trucks, motorcycles, recreational vehicles, or boats. The cleaning and routine maintenance of motor vehicles is allowed as an accessory use.

Violated or **Violating**: There exists reasonable cause to believe that an Ordinance, Code, Statute, or Law has been, or is being broken.

Warehouse Club: A retail business requiring patron membership, and selling packaged and bulk foods and general merchandise characterized by high volume and a restricted line of popular merchandise in a no-frills environment. Examples include, but are not limited to Wholesale Club, Costco, and Sam's Club.

Wholesale Distribution: A business that maintains an inventory of materials, supplies and goods related to one or more industries and sells bulk quantities of such materials, supplies and goods from its inventory to retail companies within the industry and which may include the parking and storage of distribution vehicles, and accessory activities.

Wireless Telecommunication Facility: A facility used for the transmission or reception of electromagnetic or electro-optic information, including wireless telecommunications facilities such as “cellular” or “PCS” (Personal Communications Systems) – communication and paging systems. This use is not required to be located on a separate lot or to comply with the minimum lot size requirement for the District in which it is located but is required to meet the design and locational requirements, as established for such uses, as provided by this Ordinance. Telecommunications Site/Facility does not include radio antennas complying with the ruling of the Federal Communications Commission in “Amateur Radio Preemption, 101 FCC 2nd 952 (1985)” or a regulation related to amateur radio service adopted under 47 C.F.R. Part 97.

Yard: An open space on a lot, parcel or tract of land, unoccupied and unobstructed from the ground upward by buildings, except as otherwise provided herein.

Yard, Front: An open space on the same lot with a building between the front line of the building and the front lot line and extending across the full width of the lot. The "depth" of the front yard is the minimum distance between the front lot line and the front line of the building.

Yard, Rear: An open, unoccupied space on the same lot as a building, between the rear line of the building and the rear lot line and extending the full width of the lot except, on corner lots, the rear yard shall not include the side yard bordering the street.

Yard, Side: An open, unoccupied space on the same lot as a building, between the rear line of the building and the front line of the building and extending from the side line of the building to the side lot line; except, on corner lots, the side yard bordering the street shall extend to the rear from the front line of the building to the rear lot line, the same distance as is required for side yard setbacks on corner lots in each zone.

Zoning District: An area of the city that has been given a designation which regulates the construction, reconstruction, alteration, repair, or use of buildings or structures, or the use of land as set forth in this Ordinance.

Zoning Districts Map: The map, adopted as part of a Land Use Ordinance, including this Ordinance that depicts and identifies the geographic location of the Zoning Districts provided by this Ordinance.

Zoning Ordinance: This Ordinance, and any amendments thereto as may be amended from time to time. This Ordinance is determined and identified to be a Land Use Ordinance of the City of Vineyard, Utah.

SECTION 6: **EFFECTIVE DATE** This Ordinance shall be in full force and effect from July 22, 2020 and after the required approval and publication according to law.

PASSED AND ADOPTED BY THE VINEYARD COUNCIL
_____.

	AYE	NAY	ABSENT	ABSTAIN
Mayor Julie Fullmer	_____	_____	_____	_____
John Earnest	_____	_____	_____	_____
Tyce Flake	_____	_____	_____	_____
Chris Judd	_____	_____	_____	_____
Cristy Welsh	_____	_____	_____	_____

Presiding Officer

_____
Julie Fullmer, Mayor, Vineyard

Attest

_____
Pamela Spencer, City Recorder
Vineyard

VINEYARD
ZONING MAP

MAY 2020

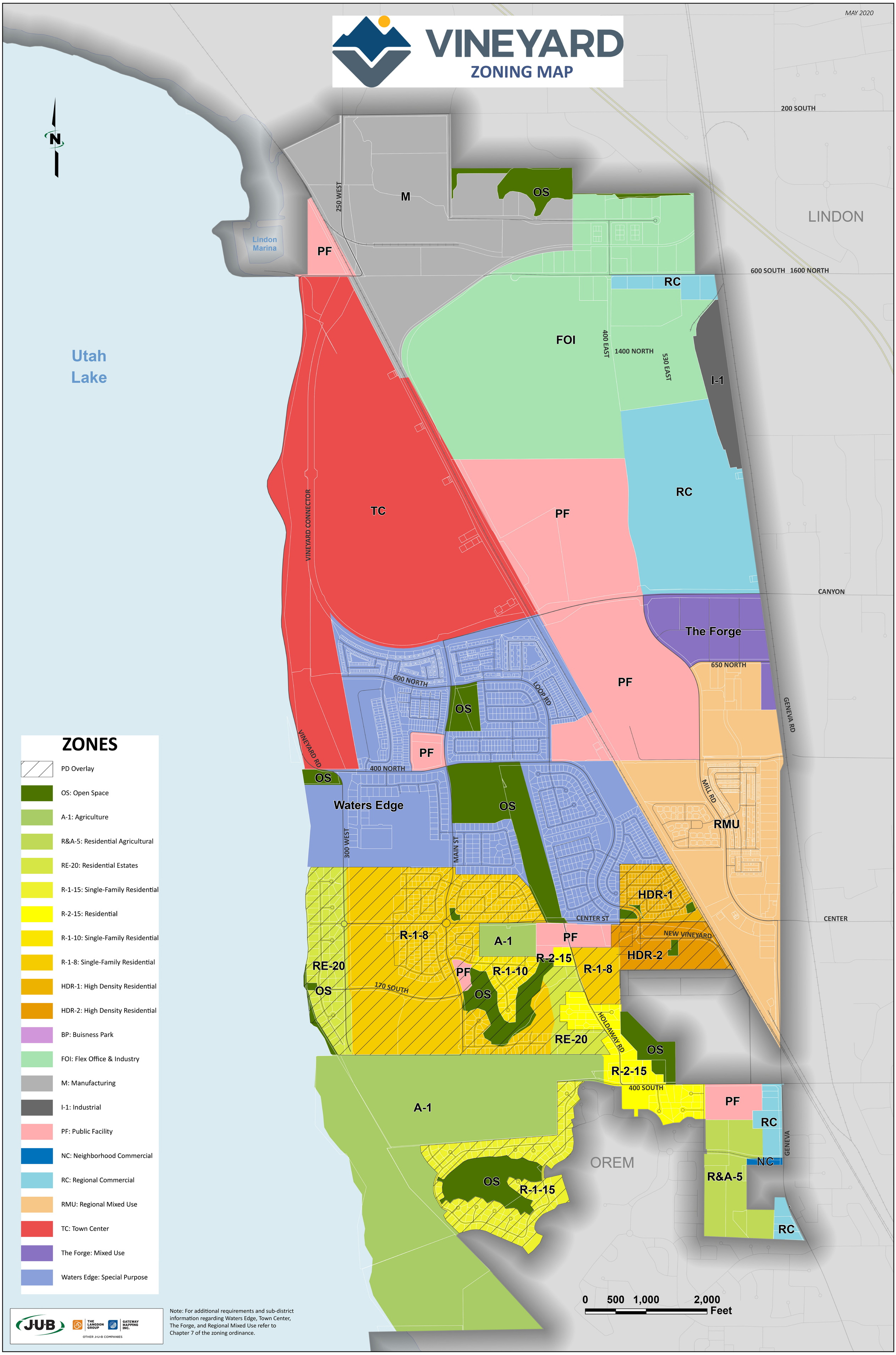

ZONES

- PD Overlay
- OS: Open Space
- A-1: Agriculture
- R&A-5: Residential Agricultural
- RE-20: Residential Estates
- R-1-15: Single-Family Residential
- R-2-15: Residential
- R-1-10: Single-Family Residential
- R-1-8: Single-Family Residential
- HDR-1: High Density Residential
- HDR-2: High Density Residential
- BP: Buisness Park
- FOI: Flex Office & Industry
- M: Manufacturing
- I-1: Industrial
- PF: Public Facility
- NC: Neighborhood Commercial
- RC: Regional Commercial
- RMU: Regional Mixed Use
- TC: Town Center
- The Forge: Mixed Use
- Waters Edge: Special Purpose

J-U-B | THE LANGDON GROUP | GATEWAY MAPPING INC.
OTHER J-U-B COMPANIES

Note: For additional requirements and sub-district information regarding Waters Edge, Town Center, The Forge, and Regional Mixed Use refer to Chapter 7 of the zoning ordinance.

Community Development

Date: July 22, 2020
From: Morgan Brim, Community Development Director
To: Mayor and City Council
Item: 8.2 Consideration of an Ordinance to amend ADU standards
Applicant: City Initiated

OVERVIEW:
This text amendment proposes changes to VZC 15.34.060 Accessory Dwelling Units. The changes include establishing a minimum lot size for single family homes containing ADUs of 5,200 square feet; increasing parking requirements to five onsite parking spaces, provisions for tandem parking; clarifying unit size allowances; requiring a biennial business license and providing a reference to VZC Section 15.38.030(2)(b) regarding size of parking areas in front yards. Staff believes that these new changes will ensure ADUs do not overly impact single-family neighborhoods.

RECOMMENDATION:
The Planning Commission recommended approval of Ordinance 2020-09 amending accessory dwelling unit provisions. Staff recommends approval of the proposed ordinance.

PROPOSED MOTION:
"I move to approve Ordinance 2020-09 amending accessory dwelling unit provisions."

Attachments:
Proposed ordinance

VINEYARD
ORDINANCE 2020-09

AN ORDINANCE OF THE CITY OF VINEYARD, UTAH, AMENDING THE VINEYARD ZONING ORDINANCE TITLE 15 SECTION 15.34.060 ACCESSORY DWELLING UNITS TO ESTABLISH MINIMUM LOT SIZE REQUIREMENTS, INCREASE ONSITE PARKING REQUIREMENTS & UNIT SIZE REQUIREMENTS; PROVIDING A REPEALER CLAUSE; PROVIDING A SAVINGS AND SEVERABILITY CLAUSE, PROVIDING FOR PUBLICATION AND PROVIDING AN EFFECTIVE DATE.

WHEREAS, Title 10, Chapter 9a Municipal Land Use, Development, and Management Act of Utah Municipal Code, permits Vineyard to ensure the health, safety, and welfare of the community through local land use planning and the adoption of land use ordinances; and

WHEREAS, Vineyard is authorized to amend the City's Zoning Ordinance pursuant to Utah Municipal Code Section 10-9a-102(2); and

WHEREAS, the Planning Commission held a public hearing on July 1, 2020, and after fully considering public comment and staff recommendations, recommended approval to the Vineyard City Council; and

WHEREAS, the Vineyard City Council, having reviewed the proposed text amendments, held a public hearing on July 22, 2020; and

WHEREAS, the Vineyard City Council having considered the recommendation of the Planning Commission and submitted comments and testimony from the public, having determined that it is in the best interest of the public and adopt the proposed text amendments to the Zoning Ordinance.

NOW THEREFORE, be it ordained by the Council of Vineyard, in the State of Utah, as follows:

SECTION 1: **AMENDMENT** "15.34.060 Accessory Dwelling Units" of the Vineyard Zoning Code is hereby *amended* as follows:

AMENDMENT

15.34.060 Accessory Dwelling Units

Purpose: The purpose of the accessory dwelling unit ordinance is to promote areas in the city to accommodate an expanding population, establish regulations to address the health, safety and welfare of the community, to provide flexibility for changes in household size associated with life cycle and to enable a level of financial security for home owners.

1. **Location**: Accessory dwelling units are allowed as an accessory use to a single-family detached residence and are limited to the following development configurations:
    a. Over a detached garage, provided the parking within the garage is not eliminated or converted to living space, stairs or otherwise disrupts required parking;
    b. Within the home through an internal conversion of the housing unit maintaining an internal connection between living areas; or
    c. An addition to the home, containing an internal connection between the accessory dwelling unit and the principal part of the dwelling unit; provided, that the addition will not alter the single-family character of the structure.
2. Minimum lot size: A minimum lot size of five~~six~~ thousand two hundred (~~6~~5,2~~0~~00) square feet is required for homes containing an accessory dwelling unit.
3. **External appearance**: The accessory dwelling unit shall not alter the appearance of the structure as a single-family residence. There shall be no external evidence of occupancy by more than one (1) family, such as two (2) front doors. The architectural style, building materials and building colors of an accessory dwelling unit shall be compatible and consistent with the architectural style, materials, and color of the primary building. Mobile homes, travel trailers, boats, or similar recreational vehicles shall not be used as an accessory dwelling unit.
4. **Sale of principle dwelling**: An accessory dwelling unit shall not be sold separately from the sale of the principle building dwelling located on the same lot.
5. **Owner occupied**: The principle dwelling of the property shall be the primary residence of the property owner.
6. **Number of units**: A maximum of one (1) accessory dwelling unit may be established as a secondary use to a detached single-family dwelling.
7. **Unit size**: Accessory dwelling units shall not exceed the lesser of ~~not exceedthe greater of~~ 50% of the size of the principle dwelling unit or 1,200 square feet. In no case shall the accessory dwelling unit contain habitable square footage less than 300 square feet.
8. **Dimensional standards**: Accessory dwelling units shall comply with required building height, setbacks and all applicable dimensional standards listed in VZC 15.64 Table of Uses and Development Standards for attached or detached accessory buildings.
9. **Utilities**: An accessory dwelling unit shall be connected to, and served by, the same water, sewer, electrical, and gas meters that serve the primary building. No separate utility lines, connections, or meters shall be allowed for an accessory dwelling unit.
10. **Parking**: A single-family dwelling with an accessory dwelling unit shall provide a minimum of ~~four~~ five (~~4~~5) onsite ~~off-street~~ parking spaces located on a paved surface or approved driveway. A minimum of two (2) ~~off-street~~onsite parking spaces shall be designated for the use of those residing in the accessory dwelling unit. The number of onsite~~off-street~~ parking spaces shall not be less than the number of vehicles maintained on the property. Only driveways or parking pads containing a minimum length of eighteen feet (18') may be counted toward required onsite parking. The minimum length of a driveway counting toward onsite parking shall not include any land associated with street rights-of-way, sidewalks or public property/access. All onsite parking spaces shall contain a minimum width of eight feet (8'). Property owner parking shall not be parked tandem with tenant parking and tenant parking shall not be parked tandem with owner

parking. The area dedicated to onsite parking and driveway surfaces shall be limited in compliance with VZC Section 15.38.030(2)(b).

11. **Addresses**: The single-family dwelling and accessory dwelling unit shall have unique addresses.
12. **Entrance**: The exterior entrance to the accessory apartment shall be on the side or rear of the building and shall enter directly into the accessory dwelling unit. The interior entrance to the accessory dwelling unit shall be from within the principle dwelling unit. Only one (1) front entrance shall be visible from the front yard.
13. **Application:** An accessory dwelling unit application may only be approved if the property meets the standards listed in this section. An accessory dwelling unit shall not be authorized on a property that has outstanding ordinance violations or unpaid taxes.
14. **Business License:** All Accessory Dwelling Units shall maintain a Vineyard City Business License to be renewed biennially, subject to property inspection for code compliance by a Vineyard City staff member.
15. **Compliance with adopted codes**: Accessory dwelling units shall meet all requirements of the adopted Building Code and other applicable city ordinances and regulations.

SECTION 2: **EFFECTIVE DATE** This Ordinance shall be in full force and effect from July 22, 2020 and after the required approval and publication according to law.

PASSED AND ADOPTED BY THE VINEYARD COUNCIL
_____.

	AYE	NAY	ABSENT	ABSTAIN
Mayor Julie Fullmer	_____	_____	_____	_____
John Earnest	_____	_____	_____	_____
Tyce Flake	_____	_____	_____	_____
Chris Judd	_____	_____	_____	_____
Cristy Welsh	_____	_____	_____	_____

Presiding Officer

_____
Julie Fullmer, Mayor, Vineyard

Attest

_____
Pamela Spencer, City Recorder
Vineyard

VINEYARD
STAY CONNECTED

VINEYARD CITY COUNCIL STAFF REPORT

Meeting Date: July 22, 2020

Agenda Item: 8.3 Amending Resolution 2020-05 Bicycle Advisory Committee

Department: Planning

Presenter: Elizabeth Hart, Senior Planner

Background/Discussion:

Staff was directed to change the length of the terms for commission members from four (4) years a term to two (2) years a term. Other amendments are adding a secretary appointment and changing the title from committee to commission.

The city has the goal to become the most bicycle friendly community in the country. As the city continues to grow its bicycle infrastructure, it will be important to promote bicycling as a normal part of everyday life. One of the best ways to accomplish this goal is to have a bicycle advisory committee (BAC). The BAC is a group of volunteers appointed by the mayor. The commission will be the eyes and ears within the community, helping staff identify and resolve bicycling issues within the community. The commission will provide their expertise on bicycling matters to help city staff make bicycling part of their daily planning and decision-making processes. Most importantly, the commission will help promote bicycling by creating programs, events, and projects that provide information and education to the community related to bicycling.

The BAC shall consist of five (5) members, one (1) alternate, and one (1) ex-officio member. Members of the BAC shall be appointed by the Mayor. BAC meetings shall be held at least quarterly, and minutes of the meetings shall be kept.

Fiscal Impact: N/A

Recommendation:
Staff is recommending approval of the amendment to resolution 2020-05 which created the bicycle advisory Commission.

Sample Motion:
"I move to approve Resolution 2020-12"

Attachments:
Resolution 2020-12

RESOLUTION NO 2020-12

Amending Resolution 2020-05

RESOLUTION OF THE CITY COUNCIL OF THE CITY OF VINEYARD REGARDING THE STRUCTURE AND PURPOSE OF THE BICYCLE ADVISORY Commission ~~COMMITTEE~~

Formatted: Font color: Red, Strikethrough

WHEREAS, this resolution states the structure and purpose of the Commission; and

WHEREAS, the City Council relies on Boards and Commissions to provide advice and information on subjects within the Commission's scope; and

WHEREAS, the City of Vineyard is working towards becoming the most bicycle friendly community in the nation; and

WHEREAS, the City of Vineyard has developed a substantial system of bicycle facilities to enhance and encourage the use of bicycles as a healthy, efficient mode of transportation having minimal environmental impact; and

WHEREAS, the City of Vineyard wishes to enhance the use of bicycles for transportation and recreation by promoting efforts in the areas of bicycle education, enforcement, engineering and encouragements; and

WHEREAS, many residents in Vineyard possess knowledge and expertise in the areas of bicycle transportation and recreation which may be beneficial to this purpose of this commission.

NOW, THEREFORE, BE IT RESOLVED that the City Council of the City of Vineyard creates a Bicycle Advisory ~~Committee~~Commission to achieve the following:

1. PURPOSE

The Vineyard Bicycle Advisory ~~Committee~~Commission is to advise the City Council and staff on bicycling related issues; help advance the state of bicycle infrastructure; encourage bicycling for transportation and recreation; public education and awareness; improve safety and compliance with traffic laws; assist the City with bicycle plans; review and suggest legislative and policy changes; promote bicycling within the city as a viable transportation option or recreation; and help ensure Vineyard retains and enhances its status as a bike friendly community.

2. MEMBERSHIP

The Bicycle Advisory Commission shall consist of five (5) members, one (1) alternate and one (1) Ex-Officio member. All voting members of the Bicycle Advisory ~~Committee~~Commission, regular and alternate, shall be appointed by the Mayor. A Vineyard City staff member shall serve as the Ex-Officio member.

The alternate member shall not vote except upon one of the following conditions:

a. Absence of one (1) or more of the regular members of the ~~committee~~commission
b. Disqualification of a regular member of the commission because of an expressed conflict of interest.

3. TERMS OF OFFICE

Members of the ~~committee~~commission shall serve a term of two (2)~~four (4)~~ years, or until their successors are appointed. For the purposes of establishing staggered terms, appointments may be for terms varying between one (1) and two (2)~~four (4)~~ years as the Mayor may decide. No members shall serve for more than two (2) consecutive terms ~~four (4) year terms,~~ except under special circumstances as determined by the Mayor.

4. TERMINATION OF APPOINTMENT

Members of the Bicycle Advisory ~~Committee~~Commission serve at the pleasure of the Mayor and may be removed from office by the Mayor.

5. VACANCIES

Vacancies on the ~~committee~~commission shall be filled for the unexpired term in the same manner in which regular appointments are otherwise made.

6. OFFICERS OF THE ~~COMMITTEE~~COMMISSION

The members of the Bicycle Advisory ~~Committee~~Commission annually shall select one (1) of its members as Chairperson and one (1) of its members as Vice Chairperson. No chairperson or vice chairperson shall serve more than two (2) consecutive years~~ as chair~~.

7. CHAIR APPOINTMENTS

The chair elect will appoint a secretary from the remaining commission members. The secretary shall not serve more than two consecutive years.

~~7~~8. MEETINGS OF THE COMMISSION

The Bicycle Advisory ~~Committee~~Commission shall establish a regular time and place of meeting and shall hold at least quarterly meetings. Special meetings of the ~~committee~~commission may be called by the Chairperson, or by any three (3) or more voting members of the ~~committee~~commission. Personal notice must be given to all members of the ~~committee~~commission. If personal notice cannot be given, written notice must be mailed to such members at least twenty-four (24) hours prior to said meeting, unless said notice requirements is waived in writing by said member.

~~8~~9. QUORUM

For the purpose of transacting business, a quorum of the Bicycle Advisory ~~Committee~~Commission shall consist of three (3) of the seven (7) members. An alternate member shall be counted as a full voting member for purposes of attaining a quorum.

Formatted: Font color: Red, Strikethrough

Formatted: Indent: Left: 0"

Formatted: All caps

~~9~~10. FUNCTIONS OF THE ~~COMMITTEE~~COMMISSION

The Bicycle Advisory ~~Committee~~Commission shall have the responsibilities as provided in this section an such other duties as the Mayor may, from time to time, decide:

a. Advise and provide input on policy, management, master plans, operations & maintenance, design standards, sustainability initiatives, development plans, rules, regulations, and ordinance related to bicycling.
b. To organize community programs and projects to provide information and education to the community on bicycling.
c. Actively promote and participate in community events as it related to promoting bicycle safety and education.
d. To render an annual report of ~~Committee~~Commission activities to the governing bodies of the City.
e. To file minutes of ~~Committee~~Commission meetings.
f. To promote bicycling as a viable form of transportation.
g. Provide a venue for public input and help act as eyes and ears for issues pertaining to bicycling in Vineyard.
h. Maintain relationships with bicycle advisory and advocacy groups within the region, including Bike Utah, the Bike Collective, BACs or equivalent of other jurisdictions, and other groups as appropriate. Consult with and seek input from these groups as appropriate.
i. Work together with Vineyard staff toward the goal of becoming a Diamond-level Bicycle Friendly Community.

Passed and Effective this 22nd day of July, 2020.

_____

Mayor Julie Fullmer

Attest:

_____

Pamela Spencer, City Recorder

VINEYARD CITY COUNCIL STAFF REPORT

Meeting Date: July 22, 2020

Agenda Item: 8.4 North Waters Edge Clubhouse and Park Dedication Plat

Department: Community Development

Presenter: Elizabeth Hart, Senior Planner

Background/Discussion:
The applicant, Flagship Homes, is requesting approval of a dedication plat of Penny Springs Park, also known as the 6-acre park. A preliminary plat with the subject property was approved in June of 2015, this preliminary plat was divided into phases and this plat will be the last one of the that preliminary plat. The city will be taking over 6.37 acres, which includes the park and the parking lot. The existing clubhouse area, 0.93 acres of the subject property, shall remain as common area.

Fiscal Impact:
- General maintenance of the park (grass, play equipment, trees and irrigation).
- Maintenance of the public parking that will be shared by the HOA and the City.
- Maintenance of the detention area and stormwater system that serves the Water Edge area adjacent to the park.
- The existing pond and pump station were built by Vineyard and is currently ours to maintain

Recommendation:
Staff is recommending approval of the North Waters Edge Clubhouse and Park dedication final plat with the listed conditions of approval.

Conditions of Approval:
1) All punch list items from staff shall be finalized prior to recording.
2) Signature blocks are added to the plat for Woodside Homes.
3) The applicant is subject to all federal, state, and local laws.

Sample Motion:
"I move to approved the North Waters Edge Clubhouse and Park dedication final plat with the conditions listed.

Attachments:
North Waters Edge Clubhouse and Park Dedication Plat

VINEYARD
STAY CONNECTED

FINAL SUBDIVISION APPLICATION

Penny Springs · 6 Acre park

APPLICATION FEE: $1,940.00 +$6.20 per lot

APPLICATION DATE: 7/14/20

APPLICANT(S): Flagship Homes - Becca Gifford

ADDRESS OF APPLICANT: 1250 E. 200 S. Ste 1D. Lehi UT 84004

BUSINESS PHONE #: 801-766-4442 **CELL PHONE #:** 385-315-1214

EMAIL ADDRESS: becca@forsail.com **FAX NUMBER:** 801-766-3337

CURRENT ZONING DISTICT DESIGNATION: Waters Edge

NUMBER OF PROPOSED NEW LOTS: N/A

LOCATION/ADDRESS OF PROPOSED FINAL SUBDIVISION: Main street + Vineyard Loop Rd.

TOTAL ACREAGE OF PROPOSED FINAL SUBDIVISION: ~7.298

NAME OF PROPERTY OWNER(S): Nate Hutchinson + Pete Evans

SIGNATURE OF APPLICANT(S):

Rebecca Gifford 7/ 14 /20

Applicant Signature Date

/ /

Applicant Signature Date

PROPERTY OWNER AFFIDAVIT

STATE OF UTAH }
}ss
COUNTY OF UTAH}

I, the undersigned, _____, as owner(s) of the property identified in the attached application, depose that the statements herein contained in this application and the information provided in the attached plans and exhibits are in all respects true and correct to the best of my knowledge.

MATT RASBAND
NOTARY PUBLIC-STATE OF UTAH
COMMISSION# 695504
COMM. EXP. 06-11-2021

_____
(Property Owner)

_____
(Property Owner)

Subscribed and sworn before me, _____, a Notary Public, on this _____ day of _____, 20_____.

_____
(Notary Public)

My commission expires: 6/11/21

AGENT AUTHORIZATION AFFIDAVIT

I, the undersigned, _____, as owner(s) of the real property described in the attached application, do authorize the following:
_____, as agent(s) and designated representative(s) regarding the attached application, to appear on my behalf before any administrative or legislative body in the Town of Vineyard considering this application, and to act in all respects as agent(s) in matters pertaining to the attached application.

MATT RASBAND
NOTARY PUBLIC-STATE OF UTAH
COMMISSION# 695504
COMM. EXP. 06-11-2021

_____
(Property Owner)

_____
(Property Owner)

Dated this _____day of _____, 20 _____, personally appeared before me,
_____, the signer(s) of the agent authorization who duly acknowledged to me that they executed the same.

_____
(Notary Public)

My commission expires: 6/11/21

NORTH WATERS EDGE CLUBHOUSE AND PARK

LOCATED IN THE NORTHEAST QUARTER OF
SECTION 18, TOWNSHIP 6 SOUTH, RANGE 2 EAST,
SALT LAKE BASE AND MERIDIAN

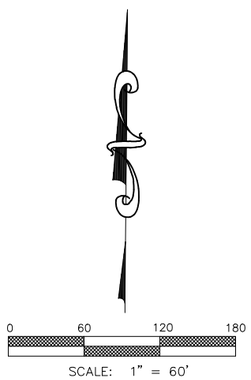

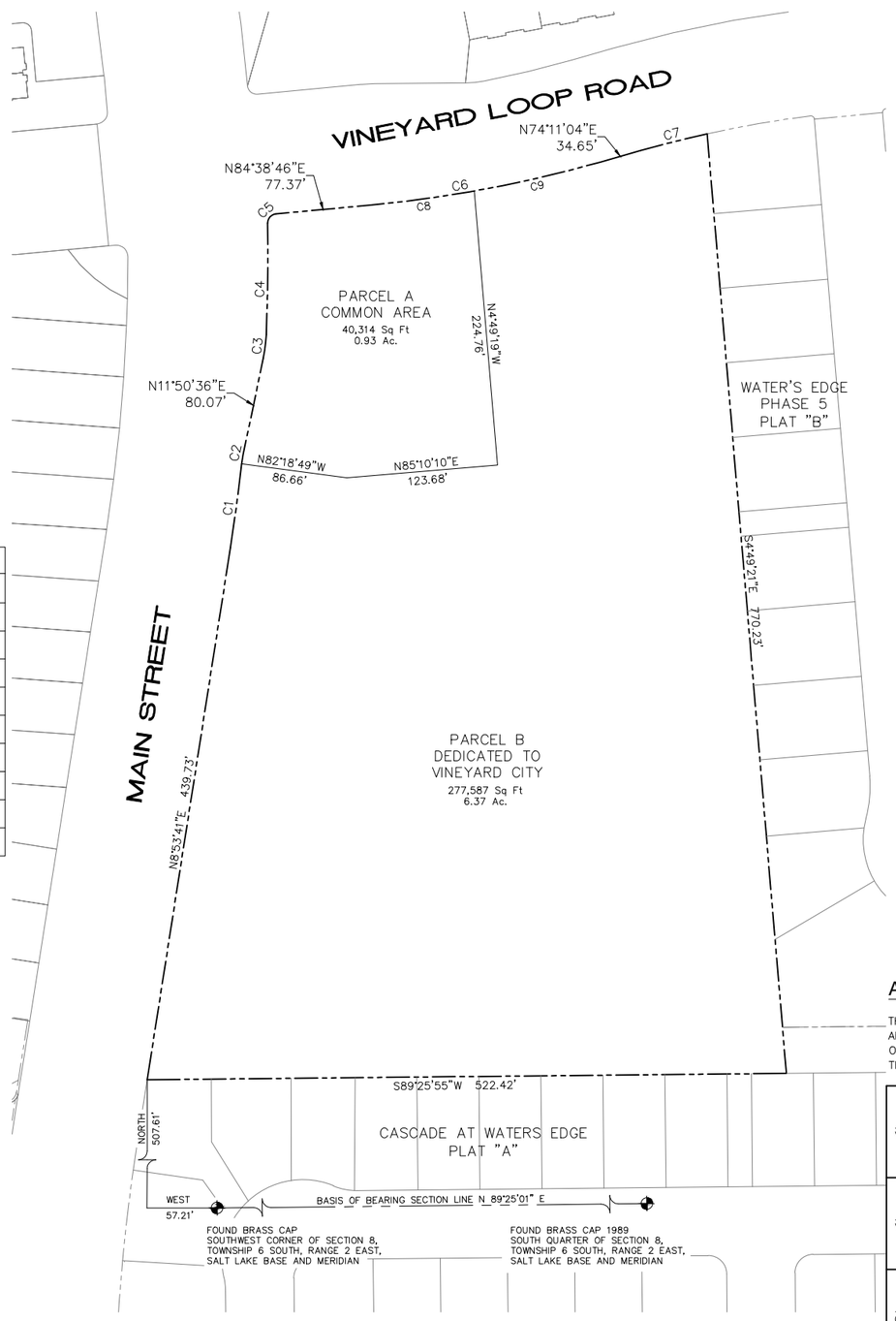

Curve Table					
Curve #	Length	Radius	Delta	Chord	Chord Bearing
C1	69.39	1553.00	2°33'36"	69.38	N07°36'53"E
C2	7.64	79.50	5°30'30"	7.64	N09°05'18"E
C3	19.82	120.50	9°25'31"	19.80	N07°07'49"E
C4	90.93	1565.00	3°19'45"	90.92	N00°44'41"E
C5	11.20	7.50	85°34'59"	10.19	N41°51'47"E
C6	191.26	1047.50	10°27'42"	191.00	N79°24'55"E
C7	55.96	952.50	3°21'58"	55.95	N75°52'03"E
C8	85.91	1047.50	4°41'57"	85.89	N82°17'48"E
C9	105.35	1047.50	5°45'45"	105.31	N77°03'57"E

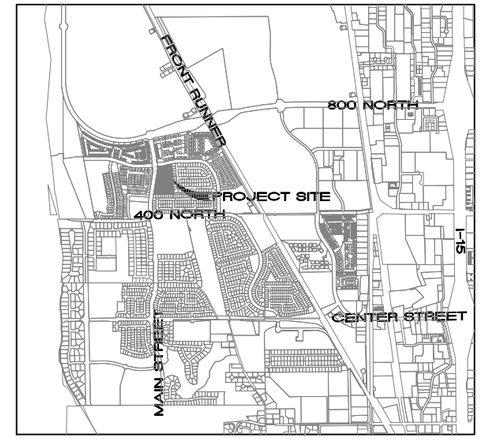

VICINITY MAP
NTS

QUESTAR GAS COMPANY

QUESTAR APPROVES THIS PLAT SOLELY FOR THE PURPOSE OF CONFIRMING THAT THE PLAT CONTAINS PUBLIC UTILITY EASEMENTS. QUESTAR MAY REQUIRE OTHER EASEMENTS IN ORDER TO SERVE THIS DEVELOPMENT. THIS APPROVAL DOES NOT CONSTITUTE ABROGATION OR WAIVER OF ANY OTHER EXISTING RIGHTS, OBLIGATIONS OR LIABILITIES PROVIDE BY LAW OR EQUITY. THIS APPROVAL DOES NOT CONSTITUTE ACCEPTANCE, APPROVAL OR ACKNOWLEDGEMENT OF ANY TERMS CONTAINED IN THE PLAT, INCLUDING THOSE SET FORTH IN THE OWNERS DEDICATION AND THE NOTES AND DOES NOT CONSTITUTE A GUARANTEE OF PARTICULAR TERMS OF NATURAL GAS SERVICE. FOR FURTHER INFORMATION PLEASE CONTACT QUESTAR'S RIGHT-OF-WAY DEPARTMENTS AT 800-366-6532.

ROCKY MOUNTAIN POWER

1. PURSUANT TO UTAH CODE ANN. 54-3-27 THIS PLAT CONVEYS TO THE OWNER(S) OR OPERATORS OF UTILITY FACILITIES A PUBLIC UTILITY EASEMENT ALONG WITH ALL THE RIGHTS AND DUTIES DESCRIBED THEREIN.
2. PURSUANT TO UTAH CODE ANN. 17-27A603(4)C(II) ROCKY MOUNTAIN POWER ACCEPTS DELIVERY OF THE PUE AS DESCRIBED IN THIS PLAT SOLELY FOR THE PURPOSE OF CONFIRMING THAT THE PLAT CONTAINS PUBLIC UTILITY EASEMENTS AND APPROXIMATES THE LOCATION OF THE PUBLIC UTILITY EASEMENTS, BUT DOES NOT WARRANT THEIR PRECISE LOCATION. ROCKY MOUNTAIN POWER MAY REQUIRE OTHER EASEMENTS IN ORDER TO SERVE THIS DEVELOPMENT. THIS APPROVAL DOES NOT AFFECT ANY RIGHT THAT ROCKY MOUNTAIN POWER HAS UNDER:
   a. A RECORDED EASEMENT OR RIGHT-OF-WAY
   b. THE LAW APPLICABLE TO PRESCRIPTIVE RIGHTS
   c. TITLE 54, CHAPTER 8A, DAMAGE TO UNDERGROUND FACILITIES
   d. ANY OTHER PROVISION OF LAW

DEVELOPER: FLAGSHIP HOMES
170 SOUTH INTERSTATE PLAZA, SUITE 250
LEHI, UT 84043 801-766-4442

TRANE ENGINEERING, P.C.
CONSULTING ENGINEERS AND LAND SURVEYORS
27 EAST MAIN LEHI, UTAH 84043 (801) 768-4544

ACCEPTANCE BY LEGISLATIVE BODY

THE LEGISLATIVE BODY OF VINEYARD CITY OF UTAH COUNTY, APPROVES THIS SUBDIVISION AND HEREBY ACCEPTS THE DEDICATION OF ALL STREETS, EASEMENTS, AND OTHER PARCELS OF LAND INTENDED FOR PUBLIC PURPOSES FOR THE PERPETUAL USE OF THE PUBLIC THIS _____ DAY OF_____ 20 ____ .

VINEYARD PLANNING COMMISSION CHAIR DATE: ___/___/_____	VINEYARD ATTORNEY DATE: ___/___/_____
VINEYARD ENGINEER DATE: ___/___/_____	CITY MANAGER DATE: ___/___/_____
CLERK/RECORDER DATE: ___/___/_____	

SURVEYOR'S CERTIFICATE

I, TRAVIS TRANE, DO HEREBY CERTIFY THAT I AM A PROFESSIONAL LAND SURVEYOR AND THAT I HOLD LICENSE NO. 5152741, IN ACCORDANCE WITH TITLE 58, CHAPTER 22 OF THE PROFESSIONAL ENGINEERS AND LAND SURVEYORS LICENSING ACT, UTAH CODE ANNOTATED, 1953 AS AMENDED, I FURTHER CERTIFY THAT BY AUTHORITY OF THE OWNERS, A SURVEY WAS MADE UNDER MY DIRECTION OF THE TRACT OF LAND SHOWN AND DESCRIBED ON THIS DEDICATION PLAT, I CERTIFY THAT SAID SURVEY WAS COMPLETED IN ACCORDANCE WITH SECTION 17-23-17, UTAH CODE ANNOTATED, 1953 AS AMENDED, I FURTHER CERTIFY THAT I HAVE VERIFIED ALL MEASUREMENTS AND THAT MONUMENTS HAVE BEEN PLACED AS SHOWN ON THIS PLAT, I HEREBY STATE THAT THIS PLAT IS TRUE AND CORRECT TO THE BEST OF MY KNOWLEDGE, INFORMATION, BELIEF AND IN MY PROFESSIONAL OPINION.

_____ _____
(SURVEYOR), P.L.S. DATE

BOUNDARY DESCRIPTION

Beginning at a point which is West 57.21 feet and North 507.61 feet from the Southwest Corner of Section 8, Township 6 South, Range 2 East, Salt Lake Base and Meridian: thence North 08°53'41" East 439.73 feet; thence Northerly 69.39 feet along the arc of a 1,553 foot radius curve to the left, through a central angel of 02°33'36", the cord of which bears North 07°36'53" East 69.38 feet; thence Northerly 7.64 feet along the arc of a 79.50 foot radius curve to the right, through a central angel of 05°30'30", the cord of which bears North 09°05'18" East 7.64 feet; thence North 11°50'36" East 80.07 feet; thence Northerly 19.82 feet along the arc of a 120.50 foot radius curve to the left, through a central angel of 09°25'31", the cord of which bears North 07°07'49" East 19.80 feet; thence Northerly 90.93 feet along the arc of a 1,565 foot radius curve to the left, through a central angel of 03°19'45", the cord of which bears North 00°44'41" East 90.92 feet; thence Northeasterly 11.20 feet along the arc of a 7.50 foot radius curve to the right, through a central angel of 85°34'59", the cord of which bears North 41°51'47" East 10.19 feet; thence North 84°38'46" East 77.37 feet; thence Northeasterly 191.26 feet along the arc of a 1047.50 foot radius curve to the left, through a central angel of 10°27'42", the cord of which bears North 79°24'55" East 191.00 feet; thence North 74°11'04" East 34.65 feet; thence Northeasterly 55.96 feet along the arc of a 952.50 foot radius curve to the right, through a central angel of 03°21'58", the cord of which bears North 75°52'03" East 55.95 feet; thence South 04°49'21" East 770.23 feet; thence South 89°25'55" West 522.42 feet to the point of beginning.

7.298 acres more or less.

Basis of bearing: The line between the Southwest Corner and the South Quarter Corner of Section 8, Township 6 South, Range 2 East, Salt Lake Base and meridian which bears North 89°25'01" East.

OWNER'S DEDICATION

KNOW ALL MEN BY THESE PRESENTS THAT THE UNDERSIGNED ARE THE OWNER(S) OF THE ABOVE DESCRIBED TRACT OF LAND, AND HEREBY CAUSE THE SAME TO BE DIVIDED INTO LOTS, PARCELS AND STREETS, TOGETHER WITH EASEMENTS AS SET FORTH TO BE HEREAFTER KNOWN AS NORTH WATERS EDGE CLUBHOUSE AND PARK, AND DO HEREBY DEDICATE FOR THE PERPETUAL USE OF THE PUBLIC ALL ROADS AND OTHER AREAS SHOWN ON THIS PLAT AS INTENDED FOR PUBLIC USE. THE UNDERSIGNED OWNER(S) ALSO HEREBY CONVEY TO ANY AND ALL PUBLIC UTILITY COMPANIES A PERPETUAL, NON-EXCLUSIVE EASEMENT OVER THE PUBLIC UTILITY EASEMENTS SHOWN ON THIS PLAT, THE SAME TO BE USED FOR THE INSTALLATION, MAINTENANCE AND OPERATION OF UTILITY LINES AND FACILITIES. PURSUANT TO UTAH CODE 10-9A-604(1d) THE OWNER HEREBY CONVEYS THE COMMON AREA, AS INDICATED HERON, TO THE WATERS EDGE HOME OWNERS ASSOCIATION, WITH THE ADDRESS OF PO BOX 179, LEHI, UT, 84043

IN WITNESS WHEREOF, WE HAVE HERE UNTO SET OUR HANDS THIS _____ DAY OF _____ A.D. 20 ____ .

SIGNATURE	PRINT NAME	TITLE & ENTITY
SIGNATURE	PRINT NAME	TITLE & ENTITY

ACKNOWLEDGEMENT

STATE OF UTAH } S.S.
COUNTY OF UTAH
ON THIS THE _____ DAY OF _____ , A.D. 20 ____ ,
PERSONALLY APPEARED BEFORE ME,
_____,
WHO BEING DULY SWORN OR AFFIRMED, DID SAY THAT HE/SHE/THEY SIGNED THE OWNER'S DEDICATION FREELY AND VOLUNTARILY AND FOR THE PURPOSES THEREIN MENTIONED.

_____
NOTARY PUBLIC

_____
MY COMMISSION EXPIRES:

NORTH WATERS EDGE CLUBHOUSE AND PARK

VINEYARD, UTAH COUNTY, UTAH
SCALE: 1"= 60 FEET

SURVEYOR SEAL	NOTARY PUBLIC SEAL	CLERK-RECORDED SEAL

RECORDING INFORMATION

VINEYARD CITY COUNCIL STAFF REPORT

Meeting Date: July 22, 2020

Agenda Item: 8.5 Plat Amendment

Department: Admin

Presenter: Jacob McHargue

Background/Discussion:
Kelcie and Devan Beck live in the Westbrook subdivision, their lot backs up to Vineyard Road on the east and a trail on the south. The elevation of their lot is approximately 4 feet below the grade of the trail and road. They have had drainage issues on this lot and have requested a resolution from the developer and the city. The initial grading plan sloped into their lot; however, they have flattened their back yard and have requested that any drainage plan we approve not impact the slope of their yard. Staff has discussed this and agree that the best solution in this situation is for a retaining wall to be built.

The property owners have presented a proposal to build an engineered retaining wall in exchange for approximately 1,300 square feet of property at the back of their lot. They have agreed to construct an engineered retaining wall on the new proposed property line high enough to allow a 2% slope back to the trail. And allow the fence to be constructed on top of the retaining wall. In exchange for the property.

Fiscal Impact: N/A

Recommendation: Staff is recommending that the city allow the property owners to construct an engineered retaining wall on the new proposed property line, this engineered wall would need to go through the permitting process with the building department and the height would need to be sufficient to allow for a 2% slope from the property line to the trail to allow for proper drainage away from the property.

Sample Motion: I move to approve item 8.6 and allow staff to work with the property owners for the construction of a retaining wall in exchange for the property that has been identified and allow staff to work with the developers to exchange the property after the project is complete.

Attachments:

THE TOWN OF Vineyard

240 East Gammon Road
Vineyard, Utah 84058
(801) 226-1929

MINOR PLAT AMMENDMENT APPLICATION

Please Note: Attachment of request specific documents is required prior to processing your application.

APPLICATION DATE: 10/15/20

APPLICANT(S): Dru Christiansen, Devan Burk, Kelcie Burk

ADDRESS OF APPLICANT: 358 E 250 N Vineyard UT, 84059

BUSINESS PHONE #: _____ CELL PHONE #: 801·362·9721

EMAIL ADDRESS: kelciegc@gmail.com FAX NUMBER: _____

CURRENT ZONING DISTICT DESIGNATION: Waters Edge: Special Purpose

NUMBER OF PROPOSED NEW LOTS: 2

LOCATION/ADDRESS OF PROPOSED FINAL SUBDIVISION: 358 E 250 N Vineyard UT

TOTAL ACREAGE OF PROPOSED FINAL SUBDIVISION: _____

NAME OF PROPERTY OWNER(S): Flagship Homes

CHECK APPLICABLE PERMIT ATTACHMENT:

	CONDITIONAL USE PERMIT	✓	FINAL PLAT
	GENERAL MAP/PLAT AMENDMENT		LAND DISTURBANCE PERMIT
✓	MINOR PLAT AMENDMENT		PERMITTED USE SITE PLAN
	PRELIMINARY SUBDIVISION		ROAD CUT PERMIT
	TEMPORARY USE PERMIT		VARIANCE APPLICATION

SIGNATURE OF APPLICANT(S):

Applicant Signature — Date: 10/24/20

Co-Applicant Signature — Date: 10/15/20

VINEYARD
VINEYARD